5909319900

tool trolley TW1300
scheppach (DIY)

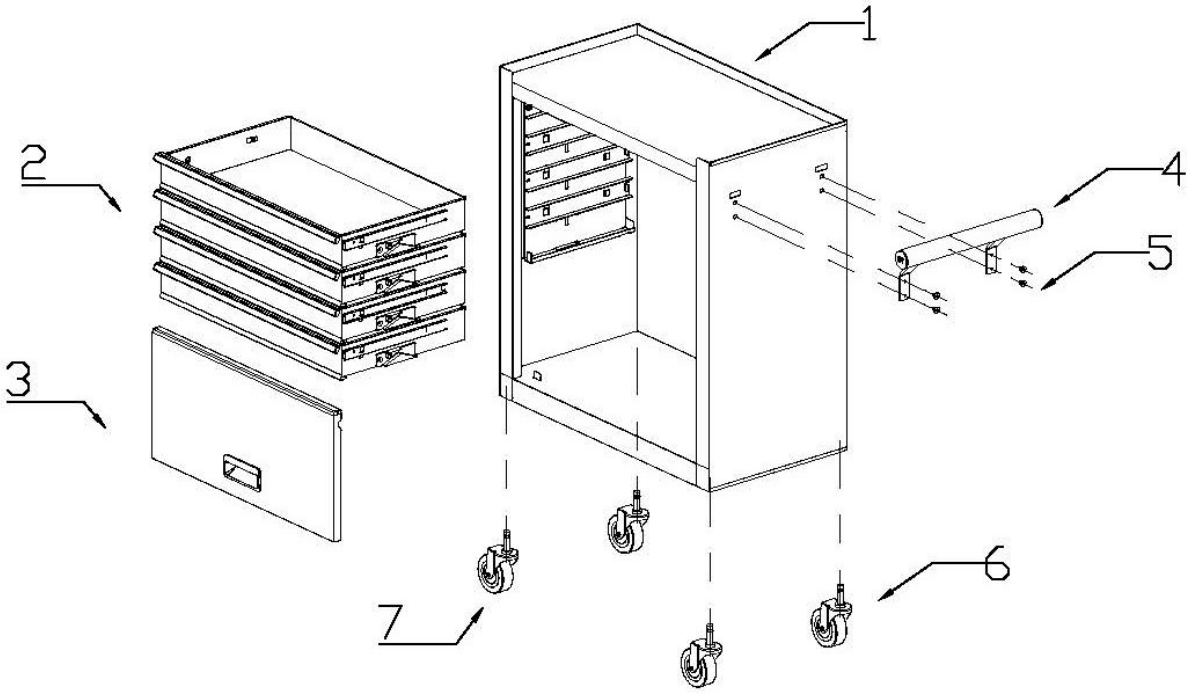

Main products	Spare part list
5909319900	231916 - 0241 - TW1300 - -

Spare	Description	additional	Item	Abb.	ConstructStatus
5909319003	drawer		2	A	*
5909319004	handle		4	A	*
02798532	oval head screw	M6x12 4.8 DIN7985 galvanized	5	A	*
5909319001	swifel castor with brake	Ø 75	6	A	*
5909319002	swifel castor	Ø 75	7	A	*
5909319005	subject mat		o.Abb.	A	*
5909319006	drawer mat		o.Abb.	A	*

!!! Do you know: From now on you can view spare parts lists in our spare parts shop and order spare parts and accessories directly. More information can be found here: https://www.scheppach.com/Shop.aspx