CL BRAKES

HIGH PERFORMANCE
SINTERED
BRAKE PADS

MASTER CATALOG N°11

BRAKE PADS

PLAQUETTES DE FREIN

pro.cl-brakes.com

Commandes en ligne / Online ordering / Online-Bestellungen / Ordini on-line / Pedidos en línea

pro.cl-brakes.com

Site B to B : Commandes en ligne

Exclusivement pour les professionnels :

- Saisie de commande et informations 24/24h - 7/7j
- Catalogue produits en ligne
- États des stocks
- Historique de commandes
- Offres exclusives

B to B website: Online orders

Exclusively for professionals:

- Order entry and order tracking information 24/7
- Online products catalog
- Status of stocks
- Order history
- Exclusive offers

Si vous n'avez pas encore vos identifiants de connexion, merci de contacter notre service commercial.
If you have not yet received your login information, please contact our sales department.

Site internet / Website / Website / Sito Internet / Sitio Web

www.cl-brakes.com

Site internet

- Actualités
- Catalogues PDF
- Réseau de revendeurs et distributeurs

Website

- News
- PDF catalogs
- Dealers & distributors network

Facebook

www.facebook.com

Facebook

- Actualités de nos pilotes et événements
- Nouveautés produits
- Jeux concours

Facebook

- News of our riders and events
- Products news
- Contests

Sommaire / Contents / Inhaltsverzeichnis / Sommario / Resumen

4
Histoire / Activités
History / Activities
Geschichte / Tätigkeitsbereich
Storia / Attività
Historia / Actividad

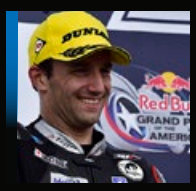

6
Compétition
Racing
Wettbewerb
Competizioni
Actividades Racing

8
Recherche & Développement
Research & Development
Forschung & Entwicklung
Ricerca & Sviluppo
Investigación y Desarrollo

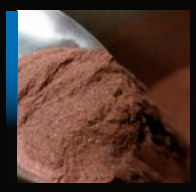

9
Technologie métal fritté
Sintered metal technology
Sintermetall-Technologie
Tecnologia materiale sinterizzato
Tecnologia metal sinterizado

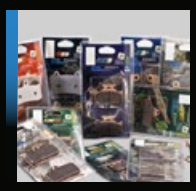

10
Gamme de plaquettes de frein
Brake pads range
Bremsbelagpalette
Gamma pastiglie freno
Gama de pastillas de freno

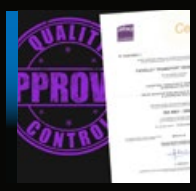

15
Assurance Qualité
Quality Insurance
Qualitätskontrolle
Garanzia di qualità
Garantía de calidad

16
Matériel promotionnel
Promotional material
Werbematerial
Materiale promozionale
Material promocional

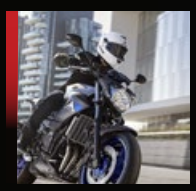

17
Applications Route
Street applications
Strasse Anwendungen
Applicazioni stradali
Aplicaciones carretera

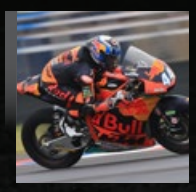

38
Applications Racing
Racing applications
Motorsport-Anwendungen
Applicazioni Racing
Aplicaciones Racing

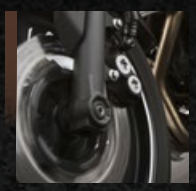

41
Applications Étriers
Calipers applications
Steibügle Anwendungen
Pinza freno applicazioni
Pinza de freno aplicaciones

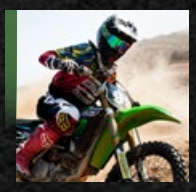

42
Applications Tout-terrain
Off-road applications
Gelände Anwendungen
Applicazioni fuoristrada
Apliaciones todo-terreno

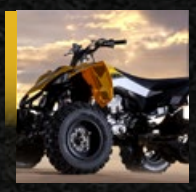

50
Applications Quad
ATV applications
Quad Anwendungen
Applicazioni ATV
Aplicaciones ATV

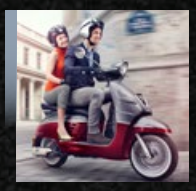

55
Applications Scooter
Scooter applications
Motorroller Anwendungen
Applicazioni Scooter
Aplicaciones Scooter

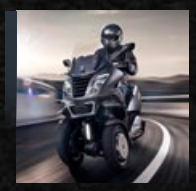

63
Applications Maxi-Scooter
Maxi-Scooter applications
Maxi-Roller Anwendungen
Applicazioni Maxi-Scooter
Aplicaciones Maxi-Scooter

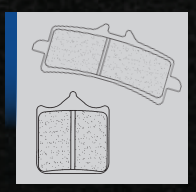

70
Dessins des plaquettes
Pad drawings
Zeichnungen Bremsbeläge
Disegni pastiglie
Dibujos de pastillas

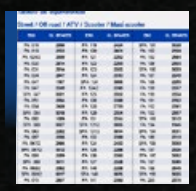

216
Tableau d'équivalences
Interchange list
Austauschliste
Tabella comparativa
Tablero de equivalencia

Histoire / History / Geschichte / Storia / Historia

MADE IN FRANCE

CL-Brakes est une marque du groupe Flertex qui, depuis plus de 60 ans fabrique et commercialise des matériaux de friction pour de multiples applications. Présent activement dans plus de 25 pays, Flertex travaille à développer ses positions à l'international en répondant aux problématiques techniques par des produits innovants et performants dans le cadre des législations en vigueur.

L'ensemble des plaquettes CL-Brakes (auto, moto, vélo) sont fabriquées sur le site historique Cabone Lorraine situé à Gennevilliers. (Paris)

CL-Brakes are part of the Flertex Group, who for over 60 years have produced and distributed friction materials for multiple applications. Present in over 25 countries, we at Flertex are constanly striving to extend our global position, with market leading innovation meeting the latest local and International legislation.

CL Brakes are still produced at the original Carbone Lorraine manufacturing site in Gennevilliers (Paris), which is constantly evolving with the latest technology.

CL-Brakes ist eine Marke aus der Flertex Gruppe, die seit mehr als 60 Jahren Reibmaterialien für vielfältige Anwendungen herstellt und vertreibt. Flertex ist in mehr als 25 Ländern aktiv und arbeitet daran, seine internationale Position zu entwickeln, indem Flertex im Rahmen der aktuellen Gesetzgebung auf technische Herausforderungen mit innovativen und leistungsstarken Produkten reagiert.

Alle CL-Brakes Bremsbeläge (Auto, Motorrad, Fahrrad) werden am ursprünglichen Standort von «Carbone Lorraine» in Gennevilliers (Paris) hergestellt.

CL-Brakes è un marchio del gruppo Flertex che, da oltre 60 anni, produce e commercializza materiali di frizione per applicazioni multipli. Presente attivamente in più di 25 paesi, Flertex si impegna per sviluppare la propria posizione internazionale rispondendo alle problematiche tecniche attraverso i suoi prodotti innovativi e performanti, nel quadro delle legislazioni in vigore.

L'insieme delle pastiglie CL-Brakes (auto, moto e bici) è fabbricato nel sito storico Carbone Lorraine, situato a Gennevilliers (Parigi).

CL-Brakes que es una marca del Grupo Flertex fabrica y comercializa materiales de fricción para diferentes aplicaciones desde hace más de 60 años. Activo en más de 25 países, Flertex trabaja para desarrollar sus posiciones internacionales al responder a problemas técnicos con productos innovadores y de alto rendimiento respectando la legislación actual.

Las pastillas de freno CL-Brakes (coche de compectición, motocicleta y bicicleta) están fabricadas en el sitio histórico de Cabone Lorraine locazilado en Gennevilliers cerca de París.

Activités / Activities / Tätigkeitsbereich / Attività / Actividad

Ferroviaire
Railway
Eisenbahn
Ferroviario
Ferroviario

Aéronautique
Aeronautics
Luftfahrt
Aeronautica
Aeronáutica

Éolienne
Wind turbine
Windkraftanlage
Aeromotore
Motor eólico

Sport automobile
Autosport
Automobilrennsport
Sport automobilistico
Deporte automovilístico

Moto
Motorcycle
Motorrad
Motocicletta
Motocicleta

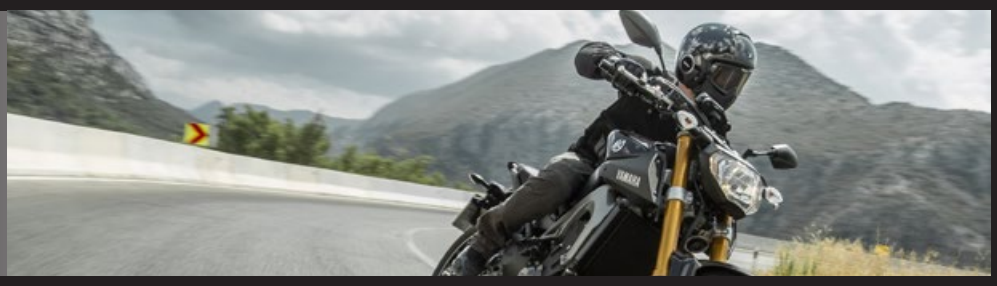

Vélo
Bicycle
Fahrrad
Bici
Bicicleta

Compétition / Racing / Wettbewerb / Competizioni / Actividades Racing

Johann ZARCO
World MotoGP Championship (2017 Rookie Of The Year)
World Moto2 Championship (2015 & 2016 Champion)

Ajo Motorsport Team
World Moto2 Championship

Junior Team LMS Suzuki
World Endurance Superstock Championship
Hugo CLERE French Superbike Challenger class Champion

Mathilde MARTINEZ
French Women MX Championship
(2018 Champion)

Bonneton 2 Roues Enduro Team
French Enduro Championship
(2018 Champion)

Sand Seb 72 Team
French Sidecar Championship
(2015 - 2016 - 2017 Champion)

Compétition / Racing / Wettbewerb / Competizioni / Actividades Racing

Bud Racing
World & European MX Championships
Brian MOREAU 2017 Europe MX125 Champion

Honda SR Team
French MX / SX Championships
Xavier BOOG 2018 MX1 France Champion /
Mathis BOISRAME 2018 MX2 France Champion

Canada KTM Thor Racing Team
Rockstar Triple Crown MX Championships

Anthony GESLIN
French Enduro E3 class Championship
(2018 Vice-champion)

Audrey ROSSAT
European Enduro Championship
(Champion)

Justine CHARROUX
World Women MX Championship
French Women MX Championship
(2018 Vice-champion)

Recherche & Développement / Research & Development / Forschung & Entwicklung / Ricerca & Sviluppo / Investigación y Desarrollo

La division Frein Moto de CL Brakes possède son propre département R&D avec son banc d'essai dédié à la recherche moto. Il simule le plus fidèlement possible les conditions d'utilisation d'un 2 roues lors des phases de freinage. Les programmes de freinage développés en relation étroite avec nos teams et pilotes de pointe nous permettent d'élaborer des programmes de simulation aptes à reproduire à l'aide de systèmes embarqués d'acquisition de données les conditions de freinage les plus diverses. Les nouvelles compositions sont alors élaborées par nos ingénieurs en matériaux puis testées sur le banc d'essai. La validation de ces nuances se termine par une phase de tests en condition réelle.
Nous n'avons de cesse de mettre en oeuvre tous les moyens pour nous permettre de faire évoluer notre gamme de plaquettes et de proposer le produit le plus adapté aux attentes des motards.

Die Motorradabteilung von CL Brakes hat ihre eigene Forschung & Entwicklung Abteilung, welche das Bremsen unter Realitaetsbedingungen simuliert. Die Bremsprogramme welche mit Hilfe von unseren Spitzenfahrern und Top Teams unter dem Einsatz von Data Acquisition entwickelt worden, erlauben uns mit unserer Simulations Software die verschiedenen Bremsbedingungen und Ablaeufe zu simulieren.
Unsere Material Ingineure entwickeln staendig neue Bremsbelag Mischungen und testen diese auf unserem eigenen Bremsenteststand. Diese neuen Belagmischungen werden dann auf der Teststrecke unter Realitaetsbedingungen von unseren Testfahrern getestet.
Staendig werden Verbesserungen in unsere Brembelag Produktpalette eingefuehrt um alle Anforderungen des modernen Motorradfahrers zu erfuellen.

CL Brakes Braking Motorcycle Division has its own R&D Department dedicated to motorcycle research. It simulates 2-wheel braking conditions nearest reality. Braking programs developed by our teams and top riders allow us to create simulation software that will reproduce with embarked systems of data acquisition to the greatest variety of braking conditions. New brake pad compounds are created by our material engineers and tested on our in house dynamometer. Compounds are tested in real conditions, as well as before the validation.
We continuously implement improvements into our brake pads to make the product most adaptable to the needs of the modern motorcyclist.

La división Frenos Moto de CL Brakes posee su propio departamento de I&D, con banco de pruebas dedicado a la investigación en el campo de la motocicleta. En él se simulan lo más fielmente posible las condiciones de utilización de una moto en sus diferentes fases de frenado. Los programas de frenado desarrollados en estrecha colaboración con nuestros equipos y pilotos de punta, nos permiten elaborar con la ayuda de los sistemas embarcados programas de simulación de las condiciones de frenado más diversas. Los nuevos compuestos son entonces elaborados por nuestros ingenieros de materiales y luego ensayados en el banco de pruebas. La validación de estas calidades termina con otra fase de ensayos en condiciones reales.
Una continua puesta al día de nuestros medios, nos permite evolucionar nuestra gama de plaquitas y poder proponer el producto mejor adaptado a las necesidades del motorista.

La Divisione Freni Moto CL Brakes possiede un proprio dipartimento Ricerca & Sviluppo con il proprio banco prova dedicato in modo specifico alla moto. Esso simula il più fedelmente possibile le condizioni di utilizzo di una moto durante le varie fasi di frenaggio. I programmi di frenaggio sviluppati in stretta collaborazione con i nostri team e piloti di punta, ci permettono di elaborare dei programmi di simulazione atti a riprodurre, grazie all'aiuto di sofisticati sistemi di acquisizione dati, le più diverse condizioni di frenaggio. I nuovi composti vengono allora elaborati materialmente dai nostri ingegneri e in seguito testati sul banco prova. La validazione di queste mescole termina con una fase di test in condizioni reali.
Lavoriamo costantemente con tutti i mezzi a nostra disposizione perchè la nostra gamma di pastiglie freno sia sempre aggiornata e perché risponda il più possibile alle esigenze dei piloti.

Technologie métal fritté / Sintered metal technology / Sintermetall-Technologie / Tecnologia del Materiale Sinterizzato / Tecnologia del Metal Sinterizado

Il existe deux types de matériaux de friction pour moto : les matériaux frittés et les matériaux organiques. Seuls les matériaux frittés peuvent répondre à l'ensemble des sollicitations d'une moto : freinages puissants, échauffement, utilisation sous eau, poussière et boue, réactivité à froid. Les plaquettes en métal fritté sont fabriquées à partir de poudres. Le produit de friction contient au moins dix constituants (cuivre, bronze, fer, céramiques, graphites...). Chacun de ces constituants a un rôle essentiel au cours du frottement de la plaquette sur le disque (confort, bruit, performance). Une fois mélangés, ces constituants forment le mélange de friction. Ce mélange est ensuite comprimé dans un outil qui lui donne sa forme finale. La pièce obtenue est ensuite positionnée sur son support métallique cuivré puis introduite dans un four à 900°C. C'est le processus de frittage : un constituant du produit fond, consolide le matériau et le brase sur son support. La plaquette est ensuite rectifiée, contrôlée puis emballée.

Two types of friction materials for motorcycle exist: sintered and organics. Only sintered can meet all the demands of a modern motorcycle: powerful braking, no fading at extreme temperatures (take out: overheating), braking in water, mud and sand, no brake delay (take out: reaction) in cold temperatures. Sintered metal brake pads are made from powders. The friction compound contains at least 10 constituents (copper, bronze, iron, ceramics, graphite..) Each of these constituents has an essential part during the friction of the brake pad on the disc (comfort, noise, performance). Once melted, these components form the friction material. This mixture is then compressed in a mould that gives the final shape. The result is then placed on its metallic copper coloured back plate and put in a furnace at 900°C. This is the sintering process: the constituents of the compound are melting and strengthening the material and braze it on the support. The brake pad is then surface machined, quality checked and packaged.

Es existieren zwei Arten von Bremsbelagmaterialien fuer Motorraeder: Sintered Metall und Organisches Belagmaterial. Nur der Sintered Metall Bremsbelag kann alle Anforderungen eines modernen Motorrades erfuellen: Starkes Bremsen von Hoechstgeschwindigkeit, kein Fading bei extremen Temperaturen, keine Bremsverzoegerung in nassen, kalten, sandigen oder matschigen Bedingungen. Das Reibmaterial enthaelt mindestens 10 verschiedene Bestandteile wie z.B. Kupfer, Bronze, Eisen, Keramik und Graphit. Jeder dieser Bestandteile verrichtet einen gewissen Arbeitsanteil waehrend des Bremsens; Brems-Leistungsverhalten, Ansprechverhalten und Geraeuschentwicklung. Einmal gemixt formen diese Bestandteile das Reibungsmaterial des Bremsbelages. Diese Pulvermischung wird dann anschliessend in einer Form zusammengepresst und ergibt die endgueltige Bremsbelagform. Dieser gepresste Belagrohling wird dann auf der typspezifischen kupferfarbigen Metallbelagplatte im Ofen bei 900 Grad Celsius platziert. Was folgt ist dann der Sintering Prozess bei 900 Grad Celsius; die Materialien des Bremsbelag Rohlings verschmelzenmiteinander und verschweissen sich mit der kupferfarbigen Belagplatte. Anschliessend wird der Bremsbelag geschliffen, dann geprueft von unserer Qualitaetskontrolle und verpackt.

Existen dos tipos de materiales de fricción para moto: Sinterizados y orgánicos. Sólo los materiales sinterizados pueden reunir todas las exigencias de una motocicleta: fuerte frenado, sobrecalentamiento, frenado en agua, barro y arena, y respuesta en bajas temperaturas. Las pastillas de freno sinterizadas están hechas a partir de polvo. El compuesto de fricción contiene hasta 10 componentes (cobre, bronce, hierro, cerámicas, grafito...). Cada uno de estos componentes tiene una papel esencial durante la fricción de la pastilla de freno en el disco (ruido, actuación...). Una vez fundidos estos componentes, forman la mezcla de fricción. Esta mezcla está entonces comprimida en un molde que da la última forma. El resultado es colocado en un soporte metálico y después se introduce en un horno a 900°C. Éste es el proceso de la sinterización: un componente de las fusiones que fortalece el material y lo suelda en el soporte. La pastilla de freno se rectifica, se verifica yse empaqueta.

Esistono due tipi di materiale di attrito per motocicli : sinterizzato ed organico. Solo il materiale sinterizzato può soddisfare a pieno le esigenze di una moto: frenata potente, surriscaldamento, frenata sul bagnato, fango e sabbia, reattività alle basse temperature. Le pastiglie freno in materiale sinterizzato sono composte da polveri. Il materiale di attrito è composto almeno da 10 ingredienti (rame, bronzo, ferro, ceramica, grafite, etc....) Ciascuno di questi ingredienti svolge una parte essenziale durante la frizione della pastiglia freno sul disco (confort, rumore, prestazioni). Una volta assemblati, questi ingredienti formano la mescola di attrito. La mistura viene poi compressa in uno stampo che conferisce la sagoma finale. Questa mescola viene poi posizionata sopra una placchetta metallica color rame e messa in un forno a 900°C. Questo è il procedimento di sinterizzazione: ciascun ingrediente si fonde con l'altro consolidando la mescola creando così il fissaggio al supporto. La pastiglia viene rettificata controllata e confezionata.

Gamme de plaquettes de frein / Brake pads range / Bremsbelagpalette / Gamma pastiglie freno / Gama de pastillas de freno

A3+ Avant / Front / Vorne / Anteriore / Delantero

Route, moyennes et grosses cylindrées / Road, medium and powerful bikes / Straße, kleine oder grosse Maschinen / Strada, medie e grosse cilindrate / Carretera, medias y altas cilindradas

- Très bonnes performances de freinage à haute énergie : progressivité et puissance. Pas de fading, peu de perte d'efficacité sous la pluie. Longévité remarquable, voire exceptionnelle dans le cas de motos lourdes et puissantes.
- Good braking capacity at high energy: power and progressiveness. No fading, minimal loss of efficiency in wet weather. Remarkable lifetime, exceptional in case of heavy and powerful motorcycles.
- Gute warm Bremseigenschaft : kraftvoll und progressiv. Kein Fading, minimaler Bremsleistungsverlust bei nasser Witterung. Sehr gute Lebensdauer, ausgewoehnlich gut fuer schwere und kraftvolle Motorraeder
- Molto buone prestazioni di frenata ad alte energie : progressività e potenza. Nessun fading, perdita di efficienza minimale sul bagnato. Ottima durata, piu che ottima sulle moto pesenti e potenti.
- Muy buenos resultados de frenado a altas energías: progresividad y potencia. Sin efecto fade, perdida minima de eficacia sobre suelo mojado. Longevidad notable, o incluso excepcional en el caso de motos pesadas y potentes.

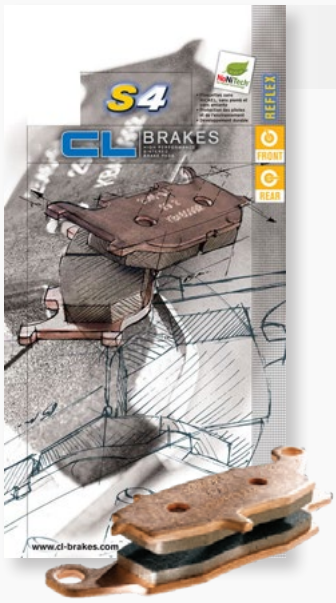

S4 Avant - Arrière / Front - Rear / Vorne - Hinten / Anteriore - Posteriore / Delantero - Trasero

Route, petites cylindrées / Road, low bikes / Straße, Minibike / Strada, picole cilindrate / Carretera, bajas cilindradas

- Longévité remarquable et excellent respect du disque. Facile à doser et progressivité dans le freinage.
- Long life performance and reduced wear of the discs. Consistent "feeling" and high braking progressiveness.
- Lange Haltbarkeit und verminderter Verschleiss der Bremsscheibe. Konstanter Druckpunkt und mit hoher Bremsprogressivitaet.
- Lunga durata e rispetto eccellente del disco. Facile da proporzionare e progressività nella frenata.
- Longevidad notable e excelente respeto del disco. Fácil a proporcionar y progresividad del frenado.

RX3 Arrière / Rear / Hinten / Posteriori / Trasero

Route, toutes cylindrées / Road, all bikes / Strasse, Straße oder Rennsport / Strada tutte le cilindrate / Carretera, todas las cilindradas

- Excellente proportionnalité entre effort à la poignée et puissance de freinage. Utilisation pour usage routier, sportif et compétition. Très faible usure des disques et des plaquettes.
- Excellent proportion between pulling effort and braking. Very low wear rate of disc and pads.
- Aussergewoehnlich gutes Verhaeltnis zwischen Zug am Handbremshebel und der Bremsleistung. Niedriger Verschleiss der Bremsscheibe.
- Ottimo rapporto tra pressione sulla leva freno e potenza frenante esercitata. Consumo molto basso sia del disco che della pastiglia.
- Excelente capacidad de frenado frente a una proporcionalidad perfecta. Bajo desgaste des disco y de las pastillas.

Gamme de plaquettes de frein / Brake pads range / Bremsbelagpalette / Gamma pastiglie freno / Gama de pastillas de freno

XBK5 Avant / Front / Vorne / Anteriore / Delantero

Route, motos sportives / Road, Supersport / Straße, Supersport / Strada, maxi sportive / Carretera, deportivas

- Plaquettes en métal fritté à très haut niveau de performance, développées spécialement pour les motos à vocation sportive. Excellent mordant pour un maximum de réactivité. Puissance de freinage élevée sur sec comme sur mouillé. Résistance au fading très élevée.
- Very high performance sintered metal brake pads designed for supersport bikes. Excellent grip for an extremely reacting braking. High performing braking in dry or wet weather. No fading.
- Hochleistungs Sintermetall Bremsbelag, entwickelt fuer Supersport Motorräder. Excellenter Reibwert unter extremen Brembedingungen. Hohe Bremsleistung in trockenen oder nassen Bedingungen.
- Pastiglie freno ad altissima prestazione progettate per uso su moto maxi sportive. Grip eccellent per un massimo di reattività. Alta efficienza sia sull'asciutto che sul bagnato. Nessun fading.
- Pastillas de freno sinterizadas de alto resultados disenadas para las motos deportivas. Excelente agarre para un maximo de reactividad. Alta actuación del freno sobre suelo humedo o mojado. Sin efecto fade.

Écran thermique céramique
Ceramic coated
Keramisch beschichtet
Schermo ceramico
Pantalla ceramica

C60 Avant / Front / Vorne / Anteriore / Delantero

Usage réservé exclusivement à la compétition / Racing use only / Nur für rennen / Solo per impiego Racing / Uso exclusivo en competición

- Très bon grip, frein extrêmement réactif. Performances élevées à faible ou haute température. Excellent respect du disque. Produits développés par les meilleurs pilotes en conditions de course.
- Very good grip, extremely reactive braking. High performances at low and high temperature. Excellent wear of the disc. Developed with top riders.
- Sehr guter Reibwert unter extremen Bremsbedingungen. Hochleistungs Bremsbelag bei niedrigen sowohl als auch hohen Temperaturen. Gutes Reibbild der Bremscheibe. Entwickelt mit Spitzen Fahrern.
- Grip molto buono, frenata estremamente reattiva. Alte prestazioni sia alle alte che alle basse temperature. Consumo del disco bassissimo. Prodotti sviluppati dai migliori piloti in condizione di corsa.
- Excelente agarre, muy buena reactividad de los frenos. Altos resultados en bajas y altas temperatures. Bajo desgaste del disco. Desarrollado por los mejores pilotos en competición.

Écran thermique céramique
Ceramic coated
Keramisch beschichtet
Schermo ceramico
Pantalla ceramica

Gamme de plaquettes de frein / Brake pads range / Bremsbelagpalette / Gamma pastiglie freno / Gama de pastillas de freno

MX10 Avant / Front / Vorne / Anteriore / Delantero

Tout-terrain Cross / Off-road MX / Fuoristrada MX

- Développé spécialement pour l'utilisation Cross. Faible usure des plaquettes. Très bonne capacité de freinage sur tout type de terrain. Excellente proportionnalité entre effort à la poignée et puissance de freinage.
- Specially developed for MX. Low wear of the pads. Very good braking capacity on all terrain. Excellent proportion between pulling effort and braking.
- Speciell entwickelt fuer Motocross. Gerringer Verschleiss der Bremsbeläge. Sehr gute Bremseigenschaften in jedem Gelaende. Aussergewoehnlich gutes Verhaeltnis zwischen Zug am Handbremshebel und der Bremsleistung.
- Specialmente sviluppato per un utilizzo mx. Debole usura delle pastiglie. Grande efficienza frenante su tutti i tipi di circuito e di gara. Ottimo rapporto tra pressione sulla leva freno e potenza frenante esercitata.
- Especialmente desarrollado para una utilización MX. Bajo desgaste delle pastillas. Muy buena capacidad de frenado sobre todo tipo de terreno. Excelente capacidad de frenado frente a una proporcionalidad perfecta.

EN10 Avant / Front / Vorne / Anteriore / Delantero

Tout-terrain Enduro / Off-road Enduro / Fuoristrada Enduro

- Développé spécialement pour l'Enduro. Faible usure des plaquettes. Très bonne capacité de freinage sur tout type de terrain. Excellente proportionnalité entre effort à la poignée et puissance de freinage.
- Specially developed for Enduro. Low wear of the pads. Very good braking capacity on all terrain. Excellent proportion between pulling effort and braking.
- Speciell entwickelt fuer Enduro. Gerringer Verschleiss der Bremsbeläge. Sehr gute Bremseigenschaften in jedem Gelaende. Aussergewoehnlich gutes Verhaeltnis zwischen Zug am Handbremshebel und der Bremsleistung.
- Specialmente sviluppato per un utilizzo Enduro. Debole usura delle pastiglie. Grande efficienza frenante su tutti i tipi di circuito e di gara. Ottimo rapporto tra pressione sulla leva freno e potenza frenante esercitata.
- Especialmente desarrollado para una utilización Enduro. Bajo desgaste de las pastillas. Muy buena capacidad de frenado sobre todo tipo de terreno. Excelente capacidad de frenado frente a una proporcionalidad perfecta.

X59 Arrière / Rear / Hinten / Posteriori / Trasero

Tout-terrain Cross-Enduro / Off-road MX-Enduro / Fuoristrada MX-Enduro

- Excellente proportionnalité entre effort à la poignée et puissance de freinage. Excellente durée de vie même en présence de boue ou de sable.
- Excellent proportion between pulling effort and braking. Very good durability in presence of mud or sand.
- Aussergewoehnlich gutes Verhaeltnis zwischen Zug am Handbremshebel und der Bremsleistung. Sehr gute Haltbarkeit von Bremsbelag und Bremsscheibe.
- Ottimo rapporto tra pressione sulla leva freno e potenza frenante esercitata. Ottima durata anche in presenza di fango o sabbia.
- Excelente capacidad de frenado frente a una proporcionalidad perfecta. Larga durabilidad tambien en la presencia de barro o arena.

Gamme de plaquettes de frein / Brake pads range / Bremsbelagpalette / Gamma pastiglie freno / Gama de pastillas de freno

ATV1 — Avant - Arrière / Front - Rear / Vorne - Hinten / Anteriore - Posteriore / Delantero - Trasero

Tout-terrain Quad / Off-road ATV / Fuoristrada ATV

Usage réservé exclusivement au Tout-terrain / Off-road use only / Einsatz nu rim Gelände / Solo uso offroad / Uso exclusivo al todo terreno

- Très bonne capacité de freinage sur tout type de terrain. Excellent respect du disque. Pas de fading. Bonne tenue sous la pluie.
- Very good braking capacity on all types of race track. Low wear of disc. No fading. High efficiency in wet conditions.
- Sehr gute Bremseigenschaften auf all moeglichen Rennstrecken. Kein Fading, hohe Leitungsfaehigkeit unter nassen Bedingungen.
- Grande efficienza frenante su tutti i tipi di circuito e di gara. Consumo del disco bassissimo. Nessun fading. Alta efficienza sia sull'asciutto che sul bagnato.
- Muy buena capacidad de frenado sobre todo tipo de terreno. Bajo desgaste del disco. Sin efecto fade. Alta actuación del freno sobre suelo humedo o mojado.

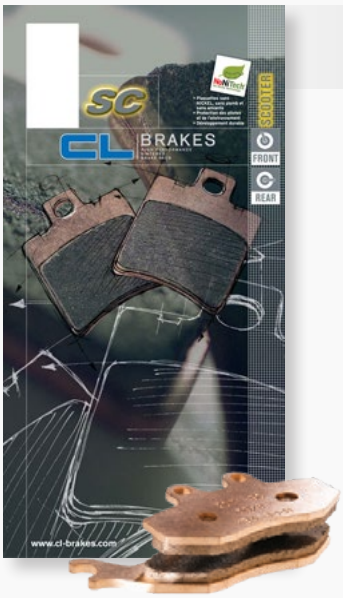

SC — Avant - Arrière / Front - Rear / Vorne - Hinten / Anteriore - Posteriore / Delantero - Trasero

Scooter (<125cc)

- Pas de fading, bonne tenue sous la pluie. Très bon rapport qualité/prix. Longévité remarquable. Excellent respect du disque.
- No fading, high efficiency in wet weather. Very good quality/price ratio. Remarkable lifetime. Low wear of disc.
- Kein Fading, hohe Leitungsfaehigkeit unter nassen Bedingungen. Sehr gutes Preis-Leistungsverhaeltnis. Sehr gute Lebensdauer. Niedriger Verschleiss der Bremsscheibe.
- Nessun fading, buona efficacia sul bagnato. Ottimo rapporto qualita/prezzo. Durata notevole. Consumo del disco bassissimo.
- Sin efecto fade, buona eficacia en suelo mojado. Relación calidad/precio my buena. Alta durabilidad. Bajo desgaste del disco.

MAXI SC — Avant - Arrière / Front - Rear / Vorne - Hinten / Anteriore - Posteriore / Delantero - Trasero

Maxi-scooter (>125cc)

- Excellente capacité de freinage à haute énergie. Pas de fading, bonne tenue sous la pluie. Freinage progressif et puissant. Faible usure du disque et des plaquettes.
- Excellent braking capacity at high energy. No fading, high efficiency in wet weather. Low wear of disc and brake pads.
- Excellente Bremseigenschaften unter harten Bedingungen. Kein Fading, hohe Leistungsfaehigkeit in nassen Bedingungen. Geringer Verbrauch von Bremsscheibe und Bremsbelag.
- Buena capacita frenante alle alte sollecitazioni. Nessun fading, buona efficacia sul bagnato. Frenata progressiva e potenta. Consumo del disco e delle pastiglie basso.
- Sin efecto fade, buena eficacia en suelo mojado. Frenado progresivo y potente. Bajo desgaste del disco y de las pastillas de freno.

Gamme de plaquettes de frein / Brake pads range / Bremsbelagpalette / Gamma pastiglie freno / Gama de pastillas de freno

	SCOOTER		STREET / CITY		SPORT	RACING	OFF-ROAD		ATV
	Scooter <125	Scooter >125	Light bike	Medium & powerful bike	Super-sport	Racing use only	Enduro	Cross	ATV
	SC	MAXISC	S4	A3+	XBK5	C60	EN10	MX10	ATV1
	SC	MAXISC	S4 RX3	RX3	RX3	RX3	X59	X59	ATV1

Coefficients de friction - Friction coefficients

PLAQUETTES ROUTE - STREET BRAKE PADS

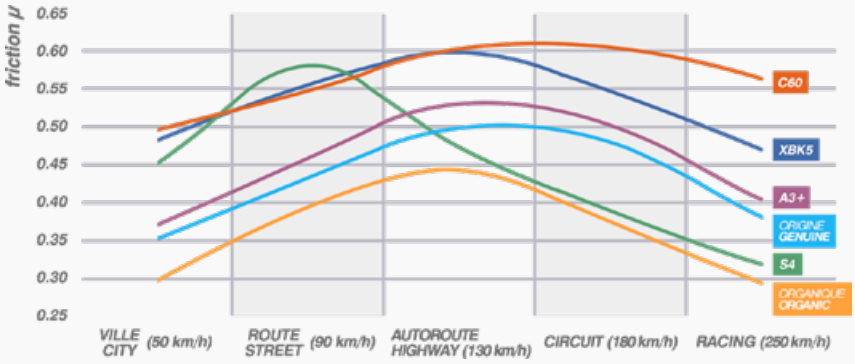

PLAQUETTES SCOOTER - SCOOTER BRAKE PADS

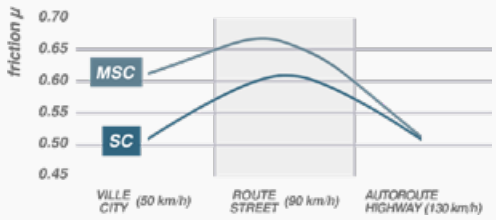

PLAQUETTES TOUT-TERRAIN - OFF-ROAD BRAKE PADS

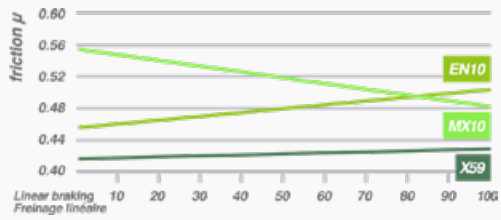

Technologie NoNiTech - NoNiTech Technology

NoNiTech® No Nickel Technology

La plupart des plaquettes en métal fritté sont produites à base de nickel. Certaines études ont montré que celui-ci pouvait être dangereux pour la santé : risque allergène et cancérogène. Pourtant rien ne l'interdit. Sensible à ce problème, la recherche CL Brakes a développé NONiTECH : LA TECHNOLOGIE SANS NICKEL. Afin de protéger ses employés, ses clients et l'environnement, CL Brakes a conçu ses produits sans plomb, sans amiante ni nickel et a fait ainsi le choix du développement durable.

Most sintered brake pads are made with nickel. Some studies have shown that nickel can jeopardize your health (allergic and carcinogenic risks). However, there are no restrictions prohibiting its use. Aware of this problem, CL Brakes research has developed NONiTECH: The NO NICKEL TECHNOLOGY. To protect its employees, its clients and the environment, CL Brakes products are free of lead, asbestos and nickel; and CL Brakes opts for sustainable development.

Die am meisten hergestellten Bremsbelege werden mit einem Anteil Nickel hergestellt. Die meisten Studien haben erwiesen, dass Nickel zu einer Gesundheitsgefährdung führen kann (Es besteht ein Allergie- und Krebsrisiko). Jedoch ist kein Verbot für den Einsatz dieses Materials geplant. Auf dieses Problem aufmerksam geworden, wurde durch die Entwicklungsabteilung von CL Brakes NONiTECH entwickelt. NONiTECH wird nickelfrei hergestellt. Damit bietet NONiTECH einen exzellenten Schutz für die Kunden, die Umwelt und Mitarbeiter. CL Brakes Produkte sind frei of Blei, Asbest und Nickel, und CL Brakes handelt zugunsten einer nachhaltigen Entwicklung.

La maggior parte delle pastiglie freno in metallo sinterizzato sono prodotte a base di Nichel. Alcuni studi hanno dimostrato che questa sostanza può essere dannosa alla salute, provocando allergie e tumori. Nonostante questo non c'è nessuna legge che ne impedisca l'utilizzo... Cosciente di questo problema, il dipartimento di Ricerca & Sviluppo CL Brakes ha creato NONITECH: LA TECNOLOGIA NO NICHEL. Al fine di proteggere i suoi dipendenti, la clientela e l'ambiente, CL Brakes ha concepito prodotti senza piombo, amianto e nichel, scegliendo così la strada dello sviluppo sostenibile.

La mayoría de las pastillas de freno sinterizadas son fabricadas a base de níkel. Algunos estudios han demostrados que este metal puede ser peligroso para la salud: riesgo alergénico y cancerígeno. Sin embargo ninguna legislación lo prohíbe... Consciente de este problema, el departamento de R&D de CL Brakes ha creado NONITECH: NO NÍCKEL TECNOLOGY. Para proteger a sus empleados, a sus clientes y al medio ambiente, CL Brakes ha creado sus productos sin plomo, sin amianto y sin níkel, y así ha escogido el camino del desarrollo sostenible.

Assurance Qualité / Quality Insurance / Qualitätskontrolle / Garanzia di Qualità / Garantía de calidad

BUREAU VERITAS Certification

FLERTEX SINTER

41 RUE JEAN JAURES
92230 GENNEVILLIERS - FRANCE

Bureau Veritas Certification France certifie que le système de management de l'organisme susmentionné a été audité et jugé conforme aux exigences de la norme :

Standard

ISO 9001:2015

Domaine d'activité

CONCEPTION, FABRICATION ET VENTES DE FREINS EN MATERIAUX FRITTES.

DESIGN, MANUFACTURING AND SALE OF BRAKE SYSTEMS IN SINTERED MATERIALS.

Date d'entrée en vigueur : 11 juillet 2018

Sous réserve du fonctionnement continu et satisfaisant du système de management de l'organisme, ce certificat est valable jusqu'au : 10 juillet 2021

Date originale de certification : 07 août 2015

Certificat n° : FR040025-1
Affaire n° : 6345889

Date : 12 juillet 2018

Jacques Mattion - Directeur général

Adresse de l'organisme certificateur : Bureau Veritas Certification France
62, avenue du Général de Gaulle - Immeuble Le Guillaumet - 92040 Paris La Défense

Des informations supplémentaires concernant le périmètre de ce certificat ainsi que l'applicabilité des exigences du système de management peuvent être obtenues en consultant l'organisme. Pour vérifier la validité de ce certificat, vous pouvez téléphoner au : + 33 (0)1 41 97 00 60

cofrac

Flertex Sinter a mis en place un Système de Gestion et d'Assurance qualité afin de répondre aux exigences de fiabilité lors de l'utilisation des plaquettes de frein moto, quad, scooter, auto, VTT...
Le Système Qualité de Flertex Sinter se réfère aux différentes normes en vigueur en France et à l'étranger (ISO 9001, TÜV...).
L'objectif est de garantir, au travers des différents stades de production :
- un contrôle des matières et des fournisseurs
- un contrôle de la fabrication
- un contrôle de l'emballage, du stockage et de la livraison
- une traçabilité
- un niveau de qualité comparable à celui des produits de première monte

Soucieux de la protection de l'environnement, en conformité avec la norme 14001 et pour garantir votre sécurité, nos produits ne contiennent ni plomb, ni amiante, ni nickel.

Flertex Sinter has implemented the Quality Administration and Control System to meet the highest quality requirements needed to ensure the best reliability for its brake pads.
The system refers to both French and international standards (ISO 9001, TÜV...).
The objective is to guarantee all manufacturing operations:
- control of raw materials and suppliers
- manufacturing control
- tracking
- packaging, storage and delivery control
- a quality equivalent to the OEM requirements

Concerned by the environmental protection, in conformity with the 14001 standard and for your safety, Flertex Sinter products are free of lead, nickel and asbestos.

Flertex Sinter verfügt über eine eigene Qualitätskontrolle, um die höchsten Anforderungen für die beste Beständigkeit ihrer Bremssysteme und Bremsbeläge zu gewährleisten. Das System erfüllt die deutschen, französischen und Internationalen Standards (ISO 9001, TÜV...).
Die Standards sind für alle Produktionsschritte garantiert: :
- Die Kontrolle des Rohmaterials und der Lieferanten
- Kontrolle des Herstellungsprozesses
- Verpackung-, Lagerungs- und Versandkontrolle
- Das Produkt bietet ein vergleichbares Equivalent zu den OEM Herstellern
- Schutz der Umwelt

Flertex Sinter ha implementato la Gestione del Controllo di Qualità ed il Sistema di Controllo Qualità per ottemperare ai più severi standard qualitativi necessari per assicurare la più alta affidabilità delle proprie pastiglie freno.
Il sistema fa riferimento agli standard sia francesi che internazionali (ISO 9001, TUV...).
L'obiettivo è di garantire in ciascuna fase di produzione :
- controllo delle materie prime e dei fornitori
- controllo del processo produttivo, imballo, stoccaggio e controllo delle consegne
- una qualità equivalente all'Originale
- tracciabilità

Sensibile alla protezione ambientale, in conformità con la norma 14001 e soprattutto per la vostra sicurezza, Flertex Sinter non utilizza per i suoi prodotti sostanze nocive come piombo, amianto o nichel.

Flertex Sinter ha llevado a cabo la Administración de Calidad y Sistema de Control para reunir los requisitos necesarios para asegurar la fiabilidad de sus pastillas de freno.
El sistema utilizado hace referencia a las normas francesas e internacionales (ISO 9001, TUV...)
El objetivo es de garantizar, a través de las diferentes fases de produción :
- control de las materias primas y de los proveedores
- control de fabricación
- control del embalaje, almacenamiento y entregas
- una calidad equivalente a los requisitos de la OEM

Preocupado por el medio ambiente, en conformidad con la norma 14001 y para su seguridad, los productos Flertex Sinter no contienen plomo, amianto ni níquel.

Matériel promotionnel / Promotional material / Webermaterial / Materiale promozionale / Material promocional

Présentoir - Display

Fronton
Header
GVC 300 CL

Présentoir en 2 parties
50 ou 100 jeux
Display in 2 parts
50 or 100 sets
GVC 201 CL1

Liquide de frein - Brake fluid

Liquide de frein haute performance DOT4
DOT4 high performance brake fluid
GVC 900 CL100

Porte-clé - Key ring

GVC 900 CL200

Vêtements - Clothing

Tshirt - Tee-shirt

S	GVC 900 CL465
M	GVC 900 CL462
L	GVC 900 CL460
XL	GVC 900 CL461
XXL	GVC 900 CL463

Polo - Shirt

M	GVC 900 CL442
L	GVC 900 CL440
XL	GVC 900 CL441
XXL	GVC 900 CL443

Polaire - Polar fleece

M	GVC 900 CL432
L	GVC 900 CL430
XL	GVC 900 CL431

Autocollants - Stickers

730 x 230 mm
GVC 900 CL302

730 x 230 mm
GVC 900 CL311

250 x 80 mm
GVC 900 CL472

250 x 80 mm
GVC 900 CL470

135 x 47 mm
GVC 900 CL301

135 x 47 mm
GVC 900 CL303

Banderoles - Banners

En rouleau (107m) / Roll (107m)
GVC 900 CL471

3000 x 600 mm
GVC 900 CL600

Badge à coudre - Patch

115 x 50 mm
GVC 900 CL601

Route / Street / Strasse / Strada / Carretera

Route Street

ALFER

						Best choice	Other choice		Best choice
VR	250	Supermotard	99 -	1	2352	XBK5	A3+	2353	RX3

AJP

PR3	125	Supermotard	08 -	1	1146	XBK5	S4	NA	
PR4	125	Supermotard	04 -	1	1144	S4		NA	
PR3	200	Supermotard	08 -	1	1146	XBK5	S4	NA	
PR4	200	Supermotard	04 -	1	1144	S4		2377	RX3
PR5	250	Supermotard	09 -	1	2300	XBK5	A3+	NA	

APRILIA

E.T.	50		85 -	1	2249	A3+	S4	2249	RX3
RS4	50	(4T) (J.Juan calipers)	11 - 14	1	2247	S4		3022	MSC
	125	Classic	96 -	1	1144	S4		2243	RX3
	125	Pegaso	90 - 91	1	1144	S4		2206	RX3
	125	Pegaso	92 -	1	1146	S4		2472	RX3
	125	Red Rose	89	1	2794	A3+	S4	2249	RX3
	125	Red Rose	90 -	1	1144	S4		2249	RX3
	125	Sport Prot.	92	1	2398	A3+	S4	2250	RX3
	125	Tuareg	- 86	1	2794	A3+	S4	T	
	125	Tuareg	87 -	1	NA			2249	RX3
	125	Tuareg Rally	86 - 88	1	2794	A3+	S4	T	
	125	Tuareg Rally	89	1	2794	A3+	S4	2249	RX3
	125	Tuareg Rally	90 - 91	1	2400	A3+	S4	2249	RX3
	125	Tuareg Rally	92	1	1144	S4		2472	RX3
	125	Tuareg Wind	88	1	2260	S4		1089	RX3
	125	Tuareg Wind	90 -	1	1144	S4		2306	RX3
	125	Tuono	04 -	1	2398	A3+	S4	2249	RX3
AF 1	125		87 -	1	2400	A3+	S4	2249	RX3
AF 1	125	Europa / Futura	90 - 91	1	2398	A3+	S4	2249	RX3
AF 1	125	Replica / Sintesi	89 - 91	1	2398	A3+	S4	2249	RX3
ETX	125		- 86	1	2794	A3+	S4	T	
ETX	125		86 - 87	1	2794	A3+	S4	2249	RX3
MX	125	Cross	85	1	2794	A3+	S4	T	
MX	125		04 -	1	2352	A3+		2472	RX3
MX	125	SM	07 -	1	2352	A3+		2472	RX3
RS	125	/ Extrema / Replica	93 - 98	1	2398	XBK5	A3+	1167	RX3
RS	125		99 - 05	1	2398	XBK5	A3+	1167	RX3
RS	125		06 -	1	1187	XBK5		NA	
RS	125	R Piste	04 - 05	1	2398	XBK5	A3+	1167	RX3
RS4	125	(4T) (J.Juan calipers)	11 - 14	1	2247	XBK5	A3+	2469	S4
RX	125		92 - 07	1	1146	S4		2306	RX3
RX	125	Enduro	08	1	2352	A3+		2469	S4
RX	125	Supermotard	08 -	1	2352	A3+		2469	S4
SX	125		08 -	1	2352	A3+		2469	S4
	250	Tuareg Rally	86 -	1	2794	A3+		2249	RX3
AF 1	250	Replica	90 -	1	2398	A3+		2332	RX3
RS	250		95 - 96	1	2247	XBK5	A3+	2249	RX3
RS	250		97 - 02	2	2539	XBK5	A3+	2249	RX3
RS	250	R Piste	04 -	2	2539	XBK5	A3+	2249	RX3
	350	Tuareg	86 - 87	1	2794	A3+		2249	RX3
	350	Tuareg	88 - 89	1	2400	A3+		2249	RX3
	350	Tuareg Wind	87	1	2794	A3+		2249	RX3
	350	Tuareg Wind	88	1	2801	A3+		2249	RX3
	350	Tuareg Wind	90 -	1	2400	A3+		2306	RX3
ETX	350		- 86	1	2794	A3+		2249	RX3
ETX	350		86 -	1	NA			2249	RX3
SXV	450		06 -	1	NA			1103	RX3
SXV	450	Van den Bosh Rep.	08 -	1	2329	XBK5		1103	RX3
SXV	550		06 -	1	NA			1103	RX3
SXV	550	Van den Bosh Rep.	08 -	1	2329	XBK5		1103	RX3
ETX	600		86 -	1	2794	A3+		2249	RX3
	600	Pegaso	90 -	1	2400	A3+		2472	RX3
	600	Tuareg	86 - 87	1	2794	A3+		2249	RX3
	600	Tuareg	88 -	1	2400	A3+		2306	RX3
	600	Tuareg Wind	88	1	2801	A3+		2249	RX3
	600	Tuareg Wind	90 -	1	2400	A3+		2306	RX3
	650	Moto 6.5	95 -	1	2396	A3+		2306	RX3
	650	Pegaso	92 - 96		NA			2472	RX3
	650	Pegaso	97 - 00	1	2396	A3+		2306	RX3
	650	Pegaso i.e	01 -	1	2396	A3+		2353	RX3
	650	Pegaso i.e TTR	04 -	1	2396	A3+		2353	RX3
	650	Pegaso Strada	05 -	1	2539	XBK5	A3+	2353	RX3
	650	Pegaso Trail	06 -	1	2396	A3+		2353	RX3
	650	Pegaso Factory	07 -	1	NA			2353	RX3
SL	750	Shiver	07 - 17	2	1187	XBK5		2353	RX3
SL	750	Shiver GT	09 - 17	2	1187	XBK5		2353	RX3
SMV	750	Dorsoduro	08 - 17	2	1187	XBK5		2353	RX3
SMV	750	Dorsoduro Factory	10 - 17	2	2539	XBK5	A3+	2353	RX3
NA	850	Mana	07	2	1187	XBK5		2353	RX3
NA	850	Mana	08 - 17	2	1187	XBK5		NA	
NA	850	Mana GT	09 - 17	2	1187	XBK5		NA	

APRILIA

						Best choice	Other choice		Best choice
SMV	900	Dorsoduro	18 -	2	1187	XBK5		2353	RX3
SL	900	Shiver	18 -	2	1187	XBK5		2353	RX3
ETV	1000	Caponord	01 - 06	2	2396	A3+		2827	RX3
ETV	1000	Caponord Rally Raid	04 -	2	2396	A3+		2827	RX3
RST	1000	Futura	01 - 04	2	2539	XBK5	A3+	2352	RX3
RSV	1000		97 - 01	2	2539	XBK5	A3+	2827	RX3
RSV	1000		02 -	2	1033	XBK5	A3+	2827	RX3
RSV	1000	Factory Pista	04 -	2	1033	XBK5	A3+	2827	RX3
RSV	1000	Nera	04 -	2	1033	XBK5	A3+	2827	RX3
RSV	1000	R	00	2	2539	XBK5	A3+	2827	RX3
RSV	1000	R	01 - 03	2	1033	XBK5	A3+	2827	RX3
RSV	1000	R Factory Replica	04 -	2	1033	XBK5	A3+	2827	RX3
RSV	1000	SP	00 -	2	2539	XBK5	A3+	2827	RX3
RSV	1000	Tuono Fighter	03 - 05	2	1033	XBK5	A3+	2827	RX3
RSV	1000	Tuono R	03	2	2539	XBK5	A3+	2827	RX3
RSV	1000	Tuono R Factory	04 -	2	2539	XBK5	A3+	2827	RX3
RSV4	1000	Factory	09 - 10	2	1185	XBK5	A3+	2827	RX3
RSV4	1000	Factory APRC	11 -	2	1185	XBK5	A3+	2827	RX3
RSV4	1000	R	10	2	1185	XBK5	A3+	2827	RX3
RSV4	1000	R APRC	11 -	2	1185	XBK5	A3+	2827	RX3
RSV4	1000	RR	15 -	2	1185	XBK5	A3+	2827	RX3
SL	1000	Falco	00 - 05	2	2539	XBK5	A3+	2827	RX3
V4R	1000	Tuono / Tuono APRC	11 - 13	2	2539	XBK5	A3+	2827	RX3
V4R	1000	Tuono APRC ABS	13 -	2	1232	XBK5	A3+	2827	RX3
V4RR	1100	Tuono / Tuono Factory	15 -	2	1232	XBK5	A3+	2827	RX3
ETV	1200	Caponord	13 -	2	1232	XBK5	A3+	2353	RX3
ETV	1200	Caponord Rally	15 -	2	1232	XBK5	A3+	2353	RX3
SMV	1200	Dorsoduro	11 - 12	2	2539	XBK5	A3+	2353	RX3
SMV	1200	Dorsoduro ATC/ABS	11 -	2	2539	XBK5	A3+	2353	RX3

ASPES

	125	Sintesi	88 -	1	2398	A3+	S4	2249	RX3

BATAVUS

	50	Grand prix	80 -	1	2306	A3+	S4	T	

BENELLI

	49	Devil	92	1	2398	A3+	S4	T	
	49	Spring	92	1	2398	A3+	S4	T	
	49	T	83 -	1	2249	A3+	S4	T	
	49	2CE	76 - 78	1	2249	A3+	S4	T	
	49	Custom	85	1	2249	A3+	S4	T	
	50	Jarno	89	2	2398	A3+	S4	2249	RX3
	50	Sport		1	2249	A3+	S4	T	
	40	T	76 -	1	2249	A3+	S4	T	
	125	TT		1	2249	A3+	S4	T	
BX	125		89	1	2398	A3+	S4	2249	RX3
BXK	125		88	1	2249	A3+	S4	2377	RX3
E	125	LC	85	1	2249	A3+	S4	T	
666	125	Born in hell	98 -	1	2539	A3+	S4	1167	RX3
	125	Tornado Naked T	17 -	1	2451	A3+		NA	RX3
	250	2CE		1	2249	A3+		T	
	250	Disc	76 -	1	2249	A3+		T	
BN	302		14 -	2	2539	A3+		2827	RX3
	304		83 -	1	2249	A3+		T	
	350	Turismo (4T)		1	2249	A3+		2332	RX3
	354		78 - 82	2	2249	A3+		2332	RX3
	354	Sport	83 -	2	2249	A3+		2249	RX3
BX	449	Supermotard	08 -	1	1033	XBK5	A3+	2353	RX3
	500	4T	- 76	1	2249	A3+		2332	RX3
	500	4	76 -	2	2249	A3+		T	
	500	Leoncino	18 -	2	1033	XBK5	A3+	NA	RX3
	500	Leoncino Trail	18 -	2	2396	A3+		NA	RX3
	502	TRK / TRK X	16 -	2	2539	A3+		2827	RX3
BN	600	i	13	2	1033	XBK5	A3+	2827	RX3
BN	600	GT	14	2	2539	XBK5	S4	2827	RX3
BN	600	R	14	2	1232	XBK5	A3+	2827	RX3
	654	Sport	83	2	2249	XBK5	A3+	2249	RX3
	750	Sei	75 -	2	2332	A3+		2332	RX3
2ue	756	Cue	07 - 09	2	1033	XBK5	A3+	2827	RX3
2ue	756	Cue	10 -	2	2539	XBK5	A3+	2827	RX3
Tre-K	899		07 -	2	2539	XBK5	A3+	2827	RX3
TnT	899	/ Sport	07 -	2	2539	XBK5	A3+	2827	RX3
	900	Sei	81 - 83	2	2840	A3+		NA	
	900	Sei	84 -	2	2332	A3+		2332	RX3
	900	Tornado 3	00 - 02	2	2539	XBK5	A3+	2249	RX3
	900	Tornado Tre	03 -	2	1033	XBK5	A3+	2827	RX3
	900	Tornado Tre RS (Rad.cal)	04 -	2	1033	XBK5	A3+	2827	RX3
TNT	1100		04	2	2539	XBK5	A3+	2249	RX3
TNT	1130		05 -	2	2539	XBK5	A3+	2827	RX3

1 - 2 = Nombre de jeux avant / Number of front sets / Anzahl Sets / Numero blister / Numero des juegos
L = Gauche / Left / Links / Sinistra / Izquierda
R = Droite / Right / Rechts / Destra / Derecha
NA = Non attribué / Not Available / Nicht verfügbar / Non disponible / No disponible

Best choice = Meilleur choix / Empfehlung / Mescola consigliata / Pastilla recomandata
Other choice = Autre choix / Weiterer Auswahlmöglichkeiten / Altra mescola / Otra posibilidad

BENELLI

					Best choice		Other choice		Best choice
TNT	1130 Café Racer	05 -	2	1033	XBK5	A3+		2827	RX3
TNT	1130 Officine	07 -	2	1033	XBK5	A3+		2827	RX3
TNT	1130 Sport / Titanium	05 -	2	1033	XBK5	A3+		2827	RX3
	1130 Tornado	08 -	2	1033	XBK5	A3+		2827	RX3
Tre-K	1130	06 -	2	2539	XBK5	A3+		2827	RX3
Tre-K	1130 Amazonas	07 -	2	2539	XBK5	A3+		2827	RX3

BETA

	125 ALP (4T)	05 - 15	1	1146	S4		1244	RX3
	125 Jonathan	99 -	1	2247	A3+	S4	2353	RX3
	125 M4	06 -	1	1146	S4		NA	
	125 Urban	08 - 15	1	1146	S4		1244	RX3
	125 Urban Special	09 - 15	1	1146	S4		1244	RX3
RR	125 Motard (4T) (LC - spoke wheels)	08 - 14	1	1146	S4		1244	RX3
RR	125 Motard (4T) (LC - spoke wheels)	11 - 14	1	1146	S4		1244	RX3
	200 ALP (4T)	05 - 15	1	1146	S4		1244	RX3
	200 Urban	08 - 12	1	1146	S4		1244	RX3
	200 Urban Special	09 - 15	1	1146	S4		NA	
	350 4.0 Motard	04 -	1	2247	XBK5	A3+	1089	RX3
	350 ALP (4T)	05 - 15	1	1146	A3+		1244	RX3
	350 Euro	99 -	1	2247	A3+		2353	RX3
	350 Jonathan	02 -	1	2247	A3+		2353	RX3
	350 M4	06 - 12	1	2247	A3+		1244	RX3

BIMOTA

YB7	400	89 -	2	2247	XBK5	A3+	2249	RX3
	500 V Due	97 -	2	2247	XBK5	A3+	2249	RX3
	600 Bellaria Sport	91 -	2	2247	XBK5	A3+	2332	RX3
YB9	600 SRI	97 -	2	2247	XBK5	A3+	2249	RX3
	650 Supermono	97 -	2	2247	XBK5	A3+	2249	RX3
SB7	750	96 -	2	2247	XBK5	A3+	2249	RX3
YB4	750	89 -	2	2247	XBK5	A3+	2249	RX3
1D	851 Tesi	91 -	2	2247	XBK5	A3+	2332	RX3
DB1	900	92 -	2	2247	XBK5	A3+	2332	RX3
DB2	900	92 -	2	2247	XBK5	A3+	2332	RX3
DB4	900	99 -	2	2539	XBK5	A3+	2249	RX3
	900 Mantra	97 -	2	2247	XBK5	A3+	2249	RX3
1D	906 Tesi	91 -	2	2247	XBK5	A3+	2332	RX3
2D	992 Tesi	04 - 06	2	2247	XBK5	A3+	2249	RX3
DB6	992 Delirio	05 - 07	2	1033	XBK5	A3+	2827	RX3
DB5	992 Mille	05 - 07	2	1033	XBK5	A3+	2827	RX3
SB8K	996 Gobert	06	2	2539	XBK5	A3+	2249	RX3
SB8K	996 Santamonica	06	2	1033	XBK5	A3+	2249	RX3
BB3	1000	14 -	2	1185	XBK5	A3+	2827	RX3
DB5	1000 Delirio	07 -	2	1033	XBK5	A3+	2827	RX3
DB5	1000 Mille	05 -	2	1033	XBK5	A3+	2827	RX3
DB5	1000 S	07 -	2	1033	XBK5	A3+	2827	RX3
SB3	1000	83 -	2	2332	A3+		2332	RX3
SB8	1000 R	98 -	2	2539	XBK5	A3+	2249	RX3
3D	1078 Tesi	09 - 13	2	1033	XBK5	A3+	2249	RX3
3D	1078 Tesi	16 -	2	1185	XBK5	A3+	2827	RX3
DB5	1078 S / R	07 - 09	2	1033	XBK5	A3+	2827	RX3
DB5E	1078 Desiderio	12 - 13	2	1033	XBK5	A3+	2827	RX3
DB6	1078 Delirio / Delirio R	07 - 11	2	1033	XBK5	A3+	2827	RX3
DB6E	1078 Delirio / Delirio R	12 -	2	1033	XBK5	A3+	2249	RX3
DB10	1078 B.Motard	12 - 13	2	1033	XBK5	A3+	2249	RX3
DBX	1078	12 - 13	2	2396	XBK5	A3+	2396	RX3
DB7	1098	08	2	1033	XBK5	A3+	2827	RX3
DB7	1098	09	2	1185	XBK5	A3+	2249	RX3
DB9	1098 Brivido	12 - 13	2	1033	XBK5	A3+	2827	RX3
DB11	1098	12 - 13	2	1033	XBK5	A3+	2827	RX3
DB11	1098 VLX	12 - 13	2	1033	XBK5	A3+	2827	RX3
DBX	1100	12 - 14	2	2396	XBK5	A3+	2396	RX3
DB8	1198 / SP	10 - 14	2	1185	XBK5	A3+	2827	RX3
DB12	1198 B.Tourist	12 - 13	2	1033	XBK5	A3+	2827	RX3

BLATA

	125 Motard	07 -		NA			2377	RX3

BMW

	125 C1	00 -	1	2396	A3+		2353	RX3
	200 C1	02 -	1	2396	A3+		2353	RX3
G	313 310 R	16 -	1	1233	XBK5	A3+	2353	RX3
G	313 310 GS	18 -	1	1233	XBK5	A3+	2353	RX3
G	450 SMR	09 -	1	1033	XBK5	A3+	1108	RX3
G	650 Xchallenge	07 -	1	2396	A3+		2353	RX3
G	650 Xcountry	07 -	1	2396	A3+		2353	RX3
G	650 Xmoto	07 -	1	2539	XBK5	A3+	2353	RX3
F	650 CS Scarver	02 - 06	1	2396	A3+		2353	RX3

BMW

					Best choice		Other choice		Best choice
F	650 Funduro	94 - 00	1	2396	A3+		2353	RX3
F	650 GS	08 -	1	2396	A3+		2353	RX3
F	650 GS, Rallye	01 - 07	1	2396	A3+		2353	
F	650 GS Dakar	01 - 07	1	2396	A3+		2353	
F	650 Strada	97 -	1	2396	A3+		2353	
R65	650	86 -	1	2332	A3+		T	RX3
R65	650 GS	87 - 92	1	2332	A3+		T	RX3
R65	650 LS	82 -	2	2332	A3+		T	RX3
R65/1	650	86 -	1	2840	A3+		2332	RX3
F	700 GS	13 -	2	2396	A3+		2353	RX3
K75	750	09/88 -	1	2258	A3+		2332	RX3
K75	750 C	85 - 08/89	2	2332	A3+		2332	RX3
K75	750 RT (ABS)	91 -	2	2258	A3+		2332	RX3
K75	750 S	85 - 08/88	2	2332	A3+		2332	RX3
K75	750 S	09/88 -	1	2258	A3+		2332	RX3
F	800 GS	08	2	2396	A3+		2353	RX3
F	800 GT	13 - 17	2	2539	XBK5	A3+	2353	RX3
F	800 R	09 - 14	2	2539	XBK5	A3+	2353	
F	800 R	15 -	2	1232	XBK5	A3+	2353	
F	800 S	06 -	2	2539	XBK5	A3+	2353	
F	800 ST	06 -	2	2539	XBK5	A3+	2900	
R80	800 GS	81 - 84	1	2332	A3+		T	
R80	800 GS	85 - 08/88	1	2258	A3+		T	
R80	800 GS	88 - 93	1	2840	A3+		T	
R80	800 R Roadster	91 -	1	2430	A3+		T	RX3
R80	800 RT	83	2	2332	A3+		T	RX3
R80	800 RT	08/89 -	1	2258	A3+		T	RX3
R80	800	85 - 08/88	1	2258	A3+		T	RX3
R	850 C	98 -	2	2430	XBK5	A3+	2900	RX3
R	850 GS	98 -	2	2430	XBK5	A3+	2900	RX3
R	850 R	95 - 02	2	2430	XBK5	A3+	2900	RX3
R	850 R	03 -	2	2960	A3+		2900	RX3
R	850 RT	98 - 00	2	2430	XBK5	A3+	2900	RX3
R	850 RT ABS	96 - 01	2	2430	XBK5	A3+	2900	RX3
K1	1000	89 - 93	2	2430	XBK5	A3+	2332	RX3
K100	1000 GS	87 - 93	1	2840	A3+		2332	RX3
K100	1000 LT	92 -	2	2430	A3+		2332	
K100	1000 LT / RS	09/88 - 90	2	2258	A3+		2332	
K100	1000 LT / RS / RT	83 - 08/88	2	2332	A3+		2332	
K100	1000 LT ABS	89	2	2258	A3+		2332	
R100	1000 GS	86 - 94	1	2840	A3+		NA	RX3
R100	1000 R	91 - 95	1	2430	A3+		T	
R100	1000 Roadster / Mystic	93 - 95	1	2430	A3+		T	RX3
R100	1000 RS	08/89 -	1	2258	A3+		T	RX3
R100	1000 RS (4V)	90 - 92	2	2430	A3+		2332	RX3
R100	1000 RT	08/89 - 91	1	2258	A3+		T	RX3
R100	1000 RT	91 -	2	2840	A3+		2332	RX3
S	1000 R	14 -	2	1207	XBK5		2353	RX3
S	1000 RR	09 - 14	2	1207	XBK5		2353	RX3
S	1000 RR	15 -	2	1207	XBK5		2353	RX3
S	1000 RR HP4	12 -	2	1185	XBK5		2353	RX3
S	1000 RR HP4 Race	18 -	2	1185	XBK5		2353	RX3
S	1000 XR	15 -	2	1232	XBK5	A3+	2352	RX3
K	1100 All models	92 -	2	2430	XBK5	A3+	2332	RX3
K	1100 LT / LTS	92 -	2	2430	XBK5	A3+	2332	RX3
K	1100 RS / RT	93 -	2	2430	XBK5	A3+	2332	RX3
K	1100 RS ABS	93 -	2	2430	XBK5	A3+	2332	RX3
R	1100 GS	94 - 99	2	2430	XBK5	A3+	2900	RX3
R	1100 GS	00 - 01	2	2430	XBK5	A3+	2900	RX3
R	1100 GS ABS	95 - 01	2	2430	XBK5	A3+	2900	RX3
R	1100 R	95 -	2	2430	XBK5	A3+	2900	RX3
R	1100 RS	93	2	2430	XBK5	A3+	2332	RX3
R	1100 RS	94 -	2	2430	XBK5	A3+	2900	RX3
R	1100 RS ABS	93 -	2	2430	XBK5	A3+	2332	RX3
R	1100 RT	95 -	2	2430	XBK5	A3+	2900	RX3
R	1100 RT ABS	95 -	2	2430	XBK5	A3+	2900	RX3
R	1100 S	99 - 00	2	2430	XBK5	A3+	2900	RX3
R	1100 S (Brembo)	01 -	2	1101	XBK5	A3+	2900	RX3
R	1100 S ABS (Tokico)	01 -	2	2960	A3+		2900	RX3
R	1150 GS	00 - 01	2	2430	XBK5	A3+	2900	RX3
R	1150 GS / GS Adventure	02 -	2	1101	XBK5	A3+	2900	RX3
R	1150 R	01 -	2	2960	A3+		2900	RX3
R	1150 R Rockster	03 -	2	2960	A3+		2900	RX3
R	1150 RS	01 -	2	2960	A3+		2900	RX3
R	1150 RT ABS	01 -	2	1101	XBK5	A3+	2900	RX3
HP2	1200 Enduro	06 -	2	2396	XBK5	A3+	2900	RX3
HP2	1200 Megamoto	07 -	2	1101	XBK5	A3+	2900	RX3
HP2	1200 Sport	08 -	2	1185	XBK5	A3+	2352	RX3
K	1200 R Sport	07 -	2	2960	A3+		2900	RX3
K	1200 GT ABS	02 - 04	2	1101	XBK5	A3+	2332	RX3
K	1200 GT ABS	05 -	2	1101	XBK5	A3+	2900	RX3
K	1200 LT	97 - 00	2	2430	A3+		2987	RX3
K	1200 LT	00 - 09	2	2960	A3+		2987	RX3

1 - 2 = Nombre de jeux avant / Number of front sets / Anzahl Sets / Numero blister / Numero des juegos
L = Gauche / Left / Links / Sinistra / Izquierda
R = Droite / Right / Rechts / Destra / Derecha
NA = Non attribué / Not Available / Nicht verfügbar / Non disponible / No disponible

Best choice = Meilleur choix / Empfehlung / Mescola consigliata / Pastilla recomandata
Other choice = Autre choix / Weiterer Auswahlmöglichkeiten / Altra mescola / Otra posibilidad

BMW

					Best choice	Other choice		Best choice
K	1200 R	05 -	2	2960	A3+		2900	RX3
K	1200 RS	99 - 01	2	2430	XBK5	A3+	2332	RX3
K	1200 RS	02 -	2	1101	XBK5	A3+	2900	RX3
K	1200 S	05 -	2	1101	XBK5	A3+	2900	RX3
R	1200 C	98 -	2	2430	XBK5	A3+	2900	RX3
R	1200 CL	03 -	2	2960	A3+		2987	RX3
R	1200 GS	04 - 12	2	1101	XBK5	A3+	2900	RX3
R	1200 GS	13	2	1232	XBK5	A3+	2396	RX3
R	1200 GS / GS Adventure	14 -	2	1232	XBK5	A3+	2396	RX3
R	1200 Nine T	14 -	2	1232	XBK5	A3+	2352	RX3
R	1200 Nine T Pure / Scrambler	17 -	2	1232	XBK5	A3+	2352	RX3
R	1200 Nine T Urban GS / Racer	17 -	2	1232	XBK5	A3+	2352	RX3
R	1200 R	06 - 14	2	2960	A3+		2900	RX3
R	1200 R / RS	15 -	2	1232	XBK5	A3+	2396	RX3
R	1200 RT	05 - 07	2	1101	XBK5	A3+	2900	RX3
R	1200 RT	07 - 09	2	1101	XBK5	A3+	2900	RX3
R	1200 RT	10 - 13	2	1101	XBK5	A3+	2900	RX3
R	1200 RT	14 -	2	1232	XBK5	A3+	2396	RX3
R	1200 S	05 -	2	1101	XBK5	A3+	2900	RX3
R	1200 ST	05 -	2	1101	XBK5	A3+	2900	RX3
K	1300 GT	09 -	2	1101	XBK5	A3+	2900	RX3
K	1300 R	09 -	2	2960	A3+		2900	RX3
K	1300 S	09 -	2	1101	XBK5	A3+	2900	RX3
K	1300 S Motorsport	15 -	2	1101	XBK5	A3+	2900	RX3
K	1600 GT / GTL	11 -	2	2960	A3+		2396	RX3
K	1600 B	17 -	2	2960	A3+		2396	RX3

BORILE

B	500 CR	02 -	1	2247	XBK5	A3+	2353	RX3
B	500 MT	02 -	1	2247	XBK5	A3+	2353	RX3

BUELL

	500 Blast	01 -	1	2256	XBK5	A3+	2298	RX3
XB-9R	984 Firebolt	02 -	1	1139	XBK5	A3+	2298	RX3
XB-9S	984 Lightning	03 -	1	1139	XBK5	A3+	2298	RX3
XB-9SX	984 Lightning City X	04 -	1	1139	XBK5	A3+	2298	RX3
M2	1200 Cyclone	94 - 97	1	2369	A3+		2298	RX3
M2	1200 Cyclone	98 - 02	1	2899	XBK5	A3+	2472	RX3
RS	1200		1	2369	A3+		2306	RX3
S1	1200 Lightning	94 - 97	1	2369	A3+		2298	RX3
S1	1200 Lightning	98 - 02	1	2899	XBK5	A3+	2472	RX3
S1	1200 Whitelightning	98 - 02	1	2899	XBK5	A3+	2472	RX3
S3	1200 Thunderbolt	94 - 97	1	2369	A3+		2298	RX3
S3	1200 Thunderbolt	98 - 02	1	2899	XBK5	A3+	2472	RX3
S3T	1200 Thunderbolt	94 - 97	1	2369	A3+		2298	RX3
S3T	1200 Thunderbolt	98 - 02	1	2899	XBK5	A3+	2298	RX3
X1	1200 Lightning	98 - 02	1	2899	XBK5	A3+	2298	RX3
XB-12R	1200 Firebolt	04 - 08	1	1139	XBK5	A3+	2298	RX3
XB-12R	1200 Firebolt	09 -		NA			2298	RX3
XB-12S	1200 Lightning	04 - 08	1	1139	XBK5	A3+	2298	RX3
XB-12Scg	1200 Lightning	06 - 08	1	1139	XBK5	A3+	2298	RX3
XB-12Scg	1200 Lightning	09 -		NA			2298	RX3
XB-12Ss	1200 Lightning Long	06 - 08	1	1139	XBK5	A3+	2298	RX3
XB-12Ss	1200 Lightning Long	09 -		NA			2298	RX3
XB-12STT	1200 Supet TT	07 -	1	1139	XBK5	A3+	2298	RX3
XB-12X	1200 Ulysses	06 -	1	1139	XBK5	A3+	2298	RX3

CAGIVA

WMX	50	89 -	1	2400	A3+	S4	2472	RX3
	50 Blues	89	1	2794	A3+	S4	1089	RX3
	50 Cocis	89	1	2249	A3+	S4	2249	RX3
	50 Cocis	88 -	1	2249	A3+	S4	1089	RX3
	50 Lucky Explorer	88 -	1	2249	A3+	S4	1089	RX3
	50 Mito	98 -	1	2621	S4		2377	RX3
	50 Prima	92	1	2249	A3+	S4	2249	RX3
	50 Prima	93 -	1	2601	S4		2260	S4
	50 Supercity	92	1	2249	A3+	S4	2249	RX3
	50 Supercity	93 -	1	2400	A3+	S4	2249	RX3
	50 W4	92	1	2249	A3+	S4	2249	RX3
LR	80	83 -	1	2249	A3+	S4	T	
SST	80	83 -	1	2249	A3+	S4	T	
SXT	80	83 -	1	2249	A3+	S4	T	
	80 Cocis	91 -	1	2249	A3+	S4	1089	RX3
	80 Prima	92 -	1	2601	S4		2260	S4
	80 Super City	92 - 93	1	2249	A3+	S4	2249	RX3
	80 Super City	94 -	1	2400	A3+	S4	2249	RX3
	80 W4	92 -	1	2249	A3+	S4	2249	RX3
	110 Passing	94 -	1	2288	A3+	S4	T	
	116 Stella	97 -	1	2621	A3+	S4	T	
	125 Aletta Electra	87 -	1	2249	A3+	S4	T	

CAVIGA

					Best choice	Other choice		Best choice
	125 Aletta Oro	86 -	1	2249	A3+	S4	2249	RX3
	125 Blues	92 - 95	1	2794	A3+	S4	2249	RX3
	125 Cruiser	87	1	2400	A3+	S4	1089	RX3
	125 Dakar	86	1	2249	A3+	S4	T	
	125 Elefant re	87 -	1	2249	A3+	S4	T	
	125 Freccia	89	1	2400	A3+	S4	2249	RX3
	125 Freccia C12 R	91 -	1	2400	A3+	S4	2249	RX3
	125 Mito	93 -	1	2247	A3+	S4	2249	RX3
	125 Mito EV / SP	95 -	1	2247	A3+	S4	2249	RX3
	125 Mito Racer	91 - 92	1	2400	A3+	S4	2249	RX3
	125 N1	97 -	1	2400	A3+	S4	2249	RX3
	125 N90	91 -	1	2400	A3+	S4	1089	RX3
	125 Planet	98 - 02	1	2247	A3+	S4	2249	RX3
	125 Raptor	03 -	1	2247	A3+	S4	2249	RX3
	125 Roadster	94 -	1	2794	A3+	S4	T	
	125 Supercity	92 - 95	1	2400	A3+	S4	2249	RX3
	125 Supercity	98 -	1	2400	A3+	S4	2249	RX3
	125 Tamanaco	88 - 89	1	2400	A3+	S4	1089	RX3
W8	125	92 -	1	2249	A3+	S4	2249	RX3
K7	125	91 -	1	2400	A3+	S4	2249	RX3
	200 Elefant	86 -	1	2249	A3+		T	
	200 Roadster	96 -	1	2794	A3+		T	
SST	250 Ala Verde	81 -	1	2249	A3+		T	
	350 W 12	92 -	1	2400	A3+		2249	RX3
	350 Alazurra	85 -	1	2249	A3+		2249	RX3
	350 Elefant	86 -	1	2801	A3+		2249	RX3
SST	350 Ala Verde	81 -	1	2249	A3+		T	
SST	350	83 -	1	2249	A3+		T	
SXT	350 Ala Rossa	82 -	1	2249	A3+		T	
T4	350 E	87 -	1	2249	A3+		T	
T4	350 R	87 -	1	2249	A3+		T	
MXR	400	82 -	1	2249	A3+		T	
	500 Canyon	99 -	1	2288	A3+		2326	RX3
	500 Mito	07	1	2247	XBK5	A3+	2249	RX3
	500 River	00 -	1	2247	A3+		2249	RX3
MXR	500	82 -	1	2249	A3+		T	
T4	500 E	87 -	1	2249	A3+		T	
SP	525 Mito	08 -	1	2247	XBK5	A3+	2249	RX3
	600 Canyon	96	1	2288	A3+		2326	RX3
	600 River	94 - 95	1	2247	A3+		2249	RX3
	600 W16	95 -	1	2400	A3+		2306	RX3
	650 Alazurra		1	2249	A3+		2249	RX3
	650 Elefant	86 -	1	2801	A3+		2249	RX3
	650 Raptor	01 -	2	2539	XBK5	A3+	2827	RX3
	650 V-Raptor	01 -	2	2539	XBK5	A3+	2827	RX3
	750 Elefant	88	1	2249	A3+		2249	RX3
	750 Elefant	94 - 95	1	2310	A3+		2352	RX3
	750 Lucky Explorer	88	1	2801	A3+		2249	RX3
E	750	96 -	2	2352	A3+		2352	RX3
	900 Elefant	90 - 92	1	2248	A3+		2326	RX3
	900 Elefant	93 - 95	1	2352	A3+		2352	RX3
	900 E.I Canyon	98	1 L	2288	A3+		2326	RX3
	900 E.I Canyon	98	1 R	2326	A3+			
	900 Gran Canyon	99 -	2	2256	A3+		2326	RX3
E	900	96 -	2	2352	A3+		2352	RX3
	1000 Navigator	00 -	2	2256	XBK5	A3+	2326	RX3
	1000 Raptor	00 -	2	2539	XBK5	A3+	2827	RX3
	1000 V-Raptor	00 -	2	2539	XBK5	A3+	2827	RX3
	1000 Xtra Raptor	02 -	2	2539	XBK5	A3+	2827	RX3
	1000 X-Raptor	03 -	2	1033	XBK5	A3+	2827	RX3
	1000 X3 Raptor	04 -	2	1033	XBK5	A3+	2827	RX3

CAN-AM

	998 Spyder RS (Brembo)	13 -	2	1232	XBK5	A3+	NA	
	998 Spyder RS-S (Brembo)	13 -	2	1232	XBK5	A3+	NA	
	998 Spyder ST (Brembo)	13 -	2	1232	XBK5	A3+	NA	
	998 Spyder ST LTD (Brembo)	13 -	2	1232	XBK5	A3+	NA	
	998 Spyder ST-S (Brembo)	13 -	2	1232	XBK5	A3+	NA	
	1330 Spyder RT (Brembo)	13 -	2	1232	XBK5	A3+	NA	
	1330 Spyder RT LTD (Brembo)	13 -	2	1232	XBK5	A3+	NA	
	1330 Spyder RT-S (Brembo)	13 -	2	1232	XBK5	A3+	NA	

CANNONDALE

S	440 SM	03 -	1	2247	XBK5	A3+	2299	RX3

CCM

	604 DS Supermoto	99 - 01	1	2352	XBK5	A3+	2353	RX3
	604 RS Roadster	01	1	2352	XBK5	A3+	2353	RX3
	644 DS Supermoto	02 -	1	2352	XBK5	A3+	2353	RX3

1 - 2 = Nombre de jeux avant / Number of front sets / Anzahl Sets / Numero blister / Numero des juegos
L = Gauche / Left / Links / Sinistra / Izquierda
R = Droite / Right / Rechts / Destra / Derecha
NA = Non attribué / Not Available / Nicht verfügbar / Non disponible / No disponible

Best choice = Meilleur choix / Empfehlung / Mescola consigliata / Pastilla recomandata
Other choice = Autre choix / Weiterer Auswahlmöglichkeiten / Altra mescola / Otra posibilidad

CCM

						Best choice	Other choice		Best choice
	644	RC 30	02 -	1	2352	XBK5	A3+	2353	RX3

CPI

	50	Supermoto / Supercross	03 -	1	2377	S4		2377	RX3
	125	Sahel	02 -	1	2300	A3+	S4	2314	RX3
	125	Supermoto	07 -	1	2377	A3+	S4	2377	RX3

CZ

CZ	180		93 -	1	2332	A3+	S4	NA	

DAELIM

	100	Altino	98 -	1	2408	A3+	S4	T	
	125	Altino	02 -	1	2408	A3+	S4	T	
	125	Magna	97 -	1	2313	A3+	S4	T	
	125	Roadwin	04 -	1	2313	A3+	S4	2326	RX3
	125	Rocket	99 -	1	2313	A3+	S4	T	
NF	125		03 -	1	2408	A3+	S4	T	
VL	125	Daystar	00 -	1	2313	A3+	S4	T	
VS	125		98 -	1	2408	A3+	S4	T	
VT	125	Evolution	00 - 01	1	2313	A3+	S4	T	
	250	Roadwin	08 -	1	2313	A3+	S4	2326	RX3

DERBI

FD	49	Yumbo	84 -	1	2377	A3+	S4	T	
FD	49	Yumbo Extra	87 -	1	2377	A3+	S4	T	
FDS	49		87 -	1	2377	A3+	S4	T	
FDT	49	Coppa	85	1	2377	A3+	S4	T	
FDT	49		87 -	1	2377	A3+	S4	T	
	75	GPR	89	1	2260	S4		2377	RX3
	75	Sport Coppa	84 -	1	2377	S4		T	
	75	GPR Sport		1	2260	S4		2377	RX3
	80	GPR Cup	04 -		NA			2377	RX3
	125	GPR	05 -		NA			2377	RX3
	125	GPR Nude	05 -		NA			2377	RX3
	125	GPR Racing	05 -		NA			2377	RX3
	125	Mulhacén	07	1	1146	S4		2249	RX3
	125	Senda X-Treme SM (4T)	04 -	1	1146	S4		2377	RX3
	250	RC	85	1	2249	A3+	S4	T	
	659	Mulhacén	05	1	1110	XBK5	A3+	2827	RX3
	659	Mulhacén	06 -	1	1033	XBK5	A3+	2827	RX3
	659	Mulhacén Cafe	08 -	1	1033	XBK5	A3+	2827	RX3

DUCATI

	250	Desmo	- 77	1	2332	A3+	S4	T	
	350	Desmo	- 77	1	2332	A3+	S4	T	
	350		75 -	1	2249	A3+	S4	T	
	350	F3	86 -	2	2249	A3+	S4	2249	RX3
	350	GTV	77	1	2249	A3+	S4	2249	RX3
	350	Paso	86	2	2249	A3+	S4	2249	RX3
	350	Indiana	86 -	1	2801	A3+	S4	2249	RX3
	350	Sport	77 -	2	2249	A3+	S4	2249	RX3
	400	Monster (Japan)	02 -	1	2539	XBK5	A3+	2249	RX3
	400	Scrambler Sixty2	17 -	1	2396	A3+		2353	RX3
	400	SS Junior	92	2	2247	A3+	S4	2249	RX3
	400	SS Nuda	92 -	1	2247	A3+	S4	2249	RX3
	500	GTV	77 -	2	2249	A3+	S4	2249	RX3
	500	Pantah	85 -	2	2332	A3+	S4	2249	RX3
	500	Sport	77 -	2	2332	A3+	S4	2332	RX3
	500	Sport Desmo	77 -	2	2249	A3+	S4	T	
	500	Twin GTL	75 -	1	2249	A3+	S4	T	
	502	Single	93	2	2247	A3+	S4	2249	RX3
	502	Supermono	93	2	2247	A3+	S4	2249	RX3
	600	Monster	94 - 99	1	2247	XBK5	A3+	2249	RX3
	600	Monster	00 - 01	1	2539	XBK5	A3+	2249	RX3
	600	Pantah TL / SL	81	2	2332	A3+	S4	2249	RX3
	600	Supersport	94 - 95	1	2247	XBK5	A3+	2249	RX3
	600	Supersport	96 - 02	1	2247	XBK5	A3+	2247	RX3
	620	Monster	05 - 06	2	2352	XBK5	A3+	2249	RX3
	620	Monster Dark	06 -	2	2352	XBK5	A3+	2249	RX3
	620	Monster Dark i.e	02 - 05	2	2539	XBK5	A3+	2249	RX3
	620	Monster i.e	02 - 05	2	2539	XBK5	A3+	2249	RX3
	620	Monster si.e	02 - 05	2	2539	XBK5	A3+	2249	RX3
	620	Multistrada	05 -	2	2352	XBK5	A3+	2827	RX3
	620	Multistrada Dark	05 -	1	2539	XBK5	A3+	2827	RX3
	620	Sport	03 -	2	2539	XBK5	A3+	2827	RX3
	650	Indiana	86 -	1	2801	A3+	S4	2249	RX3
	650	Pantah	84 -	2	2332	A3+	S4	2332	RX3
	695	Monster	06 -	2	2352	XBK5	A3+	2249	RX3

DUCATI

						Best choice	Other choice		Best choice
M	696	Monster	08 -	2	2539	XBK5	A3+	2827	RX3
	748	Biposto / SP / Strada	95 - 99	2	2247	XBK5	A3+	2249	RX3
	748	/ S	99 - 03	2	2539	XBK5	A3+	2249	RX3
	748	R	00	2	2539	XBK5	A3+	2249	RX3
	748	R	01 - 03	2	1033	XBK5	A3+	2249	RX3
	748	SPS	98 - 99	2	2539	XBK5	A3+	2249	RX3
	749	/ S	03 -	2	1033	XBK5	A3+	2827	RX3
	749	R / Dark	04 -	2	1033	XBK5	A3+	2827	RX3
	750	Carenara / Nuda	92 -	1	2247	XBK5	A3+	2249	RX3
	750	F1	86 -	2	2332	A3+		2332	RX3
	750	GT	74 - 76	2	2332	A3+		T	
	750	Indiana	87 - 90	1	2801	A3+		2249	RX3
	750	Monster	96 - 99	2	2247	XBK5	A3+	2249	RX3
	750	Monster / Monster i.e	00 - 02	2	2539	XBK5	A3+	2249	RX3
	750	Paso	86	2	2249	XBK5	A3+	2249	RX3
	750	Paso	87	2	2332	A3+		2249	RX3
	750	Paso	88	2	2249	XBK5	A3+	2249	RX3
	750	Sport	90	2	2332	A3+		2332	RX3
	750	Sport / Supersport	00 - 02	2	2539	XBK5	A3+	2827	RX3
	750	Supersport	74 - 90	2	2332	A3+		2332	RX3
	750	Supersport	91 - 94	2	2247	XBK5	A3+	2332	RX3
	750	Supersport	95 - 99	2	2247	XBK5	A3+	2249	RX3
	796	Hypermotard	10 -	2	2539	XBK5	A3+	2827	RX3
	796	Monster	10 -	2	2539	XBK5	A3+	2827	RX3
	797	Monster / +	17 -	2	1232	XBK5	A3+	2353	RX3
	800	Monster i.e / si.e	03 - 05	2	2539	XBK5	A3+	2249	RX3
	800	Monster S2R	05 - 07	2	2352	XBK5	A3+	2249	RX3
	800	Monster S2R Dark	05 - 06	2	2352	XBK5	A3+	2249	RX3
	803	Scrambler Classic / Icon	15 -	1	1232	XBK5	A3+	2353	RX3
	803	Scrambler Cafe Racer / Desert Sled	17 -	1	1232	XBK5	A3+	2353	RX3
	800	Sport / Supersport	03	2	2539	XBK5	A3+	2827	RX3
	800	Supersport	04	2	2539	XBK5	A3+	2827	RX3
	821	Hypermotard	13 -	2	1232	XBK5	A3+	2827	RX3
	821	Hypermotard SP	13 -	2	1232	XBK5	A3+	2827	RX3
	821	Hyperstrada	13 -	2	1232	XBK5	A3+	2827	RX3
	821	Monster / Monster Dark	15 -	2	1232	XBK5	A3+	2827	RX3
	848		08 -	2	2539	XBK5	A3+	2827	RX3
	848	Evo	10 -	2	1185	XBK5	A3+	2827	RX3
	848	Evo Corse SE	12-	2	1185	XBK5	A3+	2827	RX3
	848	Street Fighter	12-	2	2539	XBK5	A3+	2827	RX3
	848	Street Fighter Evo SP	12-	2	1185	XBK5	A3+	2827	RX3
	851	Strada	89	2	2247	XBK5	A3+	2249	RX3
	851	Strada	91 -	2	2247	XBK5	A3+	2332	RX3
	851	Superbike	90	2	2247	XBK5	A3+	2249	RX3
	860	GT	75 - 76	1	2332	A3+		2332	RX3
	888	Roche Replica	91 -	2	2247	XBK5	A3+	2332	RX3
	888	SPO	93	2	2247	XBK5	A3+	2249	RX3
	888	SPS / SP4	92 -	2	2247	XBK5	A3+	2249	RX3
	888	SPV	92 - 94	2	2247	XBK5	A3+	2249	RX3
	888	Strada / Superbike	93	2	2247	XBK5	A3+	2249	RX3
	899	Panigale	13 -	2	1232	XBK5	A3+	2827	RX3
906	900	Paso	89	2	2247	XBK5	A3+	2249	RX3
907	900	I. E.	92	2	2247	XBK5	A3+	2249	RX3
MH	900	e	01 -	2	2539	XBK5	A3+	2827	RX3
	900	GTS	77 -	1	2332	A3+		2332	RX3
	900	Mike Hailwood Replica	85 -	2	2332	A3+		2332	RX3
	900	Monster / Monster i.e	00 - 02	2	2539	XBK5	A3+	2827	RX3
	900	Monster IL	93 - 99	2	2247	XBK5	A3+	2249	RX3
	900	S2 Desmo	85 -	2	2332	A3+		2332	RX3
	900	Sport	77 -	2	2332	A3+		2332	RX3
	900	SSR	92	2	2247	XBK5	A3+	2249	RX3
	900	Superlight	92 - 95	1	2247	XBK5	A3+	2249	RX3
	900	Supersport	78 - 89	2	2332	A3+		2332	RX3
	900	Supersport	90 - 94	2	2247	XBK5	A3+	2332	RX3
	900	Supersport	95 - 97	2	2247	XBK5	A3+	2249	RX3
	900	Supersport	98 - 02	2	2539	XBK5	A3+	2827	RX3
	916	Biposto	94 - 97	2	2247	XBK5	A3+	2249	RX3
	916	Monster S4	01 - 03	2	2539	XBK5	A3+	2249	RX3
	916	SP / Strada / Senna	94 - 97	2	2247	XBK5	A3+	2249	RX3
	916	SPS	97 - 98	2	2539	XBK5	A3+	2249	RX3
	916	ST4	99 - 01	2	2539	XBK5	A3+	2827	RX3
	939	Hypermotard / SP	16 -	2	1232	XBK5	A3+	2827	RX3
	939	Hyperstrada	16 -	2	1232	XBK5	A3+	2827	RX3
	939	Supersport / S	17 -	2	1232	XBK5	A3+	2827	RX3
	944	ST2	97 - 03	2	2539	XBK5	A3+	2827	RX3
	950	Multistrada	17 -	2	1232	XBK5	A3+	2900	RX3
	959	Panigale / Corse	16 -	2	1232	XBK5	A3+	2827	RX3
D16RR	990	Desmosedici RR	07	2	1185	XBK5	A3+	2827	RX3
	992	ST3	04 -	2	2539	XBK5	A3+	2827	RX3
	992	ST3s ABS	06 -	2	2539	XBK5	A3+	2827	RX3
	996	Monster S4R	04 - 05	2	2539	XBK5	A3+	2249	RX3
	996	R	01	2	1033	XBK5	A3+	2249	RX3
	996	SPS	99 - 01	2	2539	XBK5	A3+	2249	RX3

1 - 2 = Nombre de jeux avant / Number of front sets / Anzahl Sets / Numero blister / Numero des juegos
L = Gauche / Left / Links / Sinistra / Izquierda
R = Droite / Right / Rechts / Destra / Derecha
NA = Non attribué / Not Available / Nicht verfügbar / Non disponible / No disponible

Best choice = Meilleur choix / Empfehlung / Mescola consigliata / Pastilla recomandata
Other choice = Autre choix / Weiterer Auswahlmöglichkeiten / Altra mescola / Otra posibilidad

DUCATI

					Best choice		Other choice	Best choice	
	996	ST4s	02 -	2	2539	XBK5	A3+	2827	RX3
	996	ST4s ABS	03 -	2	2539	XBK5	A3+	2827	RX3
	998	Monster S4RS	06	2	1033	XBK5	A3+	2827	RX3
	998	/ S	02 - 03	2	2539	XBK5	A3+	2249	RX3
	998	R	02	2	1033	XBK5	A3+	2249	RX3
	999	Monster S4R/RS	07 - 08	2	1033	XBK5	A3+	2827	RX3
	999	/ S / R	03 -	2	1033	XBK5	A3+	2827	RX3
	999	RS	04 -	2	1033	XBK5	A3+	2984	RX3
	999	R Xerox	06 -	2	1033	XBK5	A3+	2827	RX3
	1000	/ 6 Mike Hailwood Replica	85 -	2	2332	A3+		2332	RX3
SportClassic	1000	Sport / Biposto	07 -	2	2396	XBK5	A3+	2827	RX3
SportClassic	1000	GT	05 -	2	2396	XBK5	A3+	2827	RX3
SportClassic	1000	GT Touring	09 -	2	2396	XBK5	A3+	2827	RX3
	1000	Hypermotard	06 -	2	1033	XBK5	A3+	2827	RX3
	1000	Mille Replica	84 -	2	2332	A3+	S4	2332	RX3
	1000	Monster Dark i.e / si.e	03 - 05	2	2539	XBK5	A3+	2249	RX3
	1000	Monster i.e / si.e	03 - 05	2	2539	XBK5	A3+	2249	RX3
	1000	Monster S2R	07	2	2539	XBK5	A3+	2249	RX3
	1000	Monster S2R	08 -	2	2539	XBK5	A3+	2827	RX3
	1000	Monster S4R	06 -	2	2539	XBK5	A3+	2827	RX3
	1000	Monster S4RS Testatretta	06 -	2	1033	XBK5	A3+	2827	RX3
	1000	Multistrada DS	03 - 05	2	2539	XBK5	A3+	2827	RX3
	1000	Multistrada S DS	05 - 06	2	2539	XBK5	A3+	2827	RX3
	1000	Paul Smart LE	06 -	2	2396	XBK5	A3+	2353	RX3
	1000	S2 Desmo	85 -	2	2332	A3+	S4	2332	RX3
	1000	Supersport DS	03 -	2	2539	XBK5	A3+	2249	RX3
	1098	/ S	07 - 08	2	1185	XBK5	A3+	2827	RX3
	1098	R	08	2	1185	XBK5	A3+	2827	RX3
	1098	R Bayliss LE	09	2	1185	XBK5	A3+	2827	RX3
	1098	Streetfighter	09 -	2	1185	XBK5	A3+	2827	RX3
	1098	Streetfighter S	09 -	2	1185	XBK5	A3+	2827	RX3
	1100	Hypermotard	07 -	2	2539	XBK5	A3+	2827	RX3
	1100	Hypermotard S	07 -	2	1185	XBK5	A3+	2827	RX3
	1100	Hypermotard Evo	10 -	2	2539	XBK5	A3+	2827	RX3
	1100	HYPERMOTARD EVO SP	10 -	2	1185	XBK5	A3+	2827	RX3
	1100	Monster / Monster S	09 -	2	2539	XBK5	A3+	2827	RX3
	1100	Monster Evo	11 -	2	2539	XBK5	A3+	2827	RX3
	1100	Multistrada / Multistrada S	07 - 09	2	2539	XBK5	A3+	2827	RX3
	1103	Panigale V4 / S / Special	18 -	2	1185	XBK5	A3+	2827	RX3
	1198	/ S / R Corse	09 -	2	1185	XBK5	A3+	2827	RX3
	1199	Panigale / S / R / Senna	12 - 14	2	1185	XBK5	A3+	2827	RX3
	1199	Superleggera	14	2	1185	XBK5	A3+	2827	RX3
	1200	Diavel	11 -	2	1185	XBK5	A3+	2396	RX3
	1200	Diavel Titanium (ABS)	11 -	2	1185	XBK5	A3+	2396	RX3
	1200	Xdiavel / S	16 -	2	1185	XBK5	A3+	2396	RX3
	1200	Monster	14 -	2	1232	XBK5	A3+	2827	RX3
	1200	Monster S	14 -	2	1185	XBK5	A3+	2827	RX3
	1200	Monster R	15	2	1185	XBK5	A3+	2827	RX3
	1200	Multistrada Standard Edition	10 - 11	2	2539	XBK5	A3+	2827	RX3
	1200	Multistrada ABS	10 - 13	2	2539	XBK5	A3+	2827	RX3
	1200	Multistrada Granturismo	13	2	2539	XBK5	A3+	2827	RX3
	1200	Multistrada S Sports Edition	10 - 12	2	2539	XBK5	A3+	2827	RX3
	1200	Multistrada S Touring Edition	10 - 14	2	2539	XBK5	A3+	2827	RX3
	1200	Multistrada S Pikes Peak	11 - 14	2	2539	XBK5	A3+	2827	RX3
	1200	Multistrada	15 -	2	1232	XBK5	A3+	2352	RX3
	1200	Multistrada Enduro	16 -	2	1232	XBK5	A3+	2900	RX3
	1200	Multistrada S / S D-air	15 -	2	1185	XBK5	A3+	2352	RX3
	1260	Multistrada	18 -	2	1232	XBK5	A3+	2900	RX3
	1260	Multistrada S / S D-air / Pikes Peak	18 -	2	1185	XBK5	A3+	2900	RX3
	1299	Panigale / S / R	15 -	2	1185	XBK5	A3+	2827	RX3
	1299	Panigale R FE	18 -	2	1185	XBK5	A3+	2827	RX3

FANTIC

50	1 Raider	87 -	1	2306	A3+	S4	T	
50	Extra SM	98 -	1	2399	A3+	S4	2306	RX3
50	FC 01	98 -	1	2377	A3+	S4	2377	RX3
50	Koala	88 -	1	2249	A3+	S4	2249	RX3
50	Strada	83	1	2306	A3+	S4	T	
125	Caballero Motard Aircooled	10 -	1	1146	S4		2469	S4
125	Cruiser	98 -	1	2249	A3+	S4	2377	RX3
125	Extra SM	98 -	1	2399	A3+	S4	2306	RX3
125	Regolarna Casa	08 -	1	1146	S4		2469	S4
125	Supersei Motard	08 -	1	1146	S4		2469	S4
250	Raider	85	1	2794	A3+		T	

GAC

50	New T.T.	87	1	2377	A3+	S4	T	

GARELLI

					Best choice		Other choice	Best choice	
	40	Urka	91 -	1	2249	A3+	S4	T	
	50	Ciclone LC	86	1	2249	A3+	S4	T	
	50	Sahel	91 -	1	2260	S4		2377	RX3
	50	Tiger XLE	86 -	1	2249	A3+	S4	2249	RX3
GTA	125		83 - 85	2	2249	A3+	S4	2249	RX3
	125	Tiger XLE	86 -	1	2794	A3+	S4	1089	RX3

GAS GAS

SM	125		02 -	1	2247	XBK5	A3+	2314	RX3
SM	250		02 -	1	2247	XBK5	A3+	2314	RX3
SM	400	fse	03 -	1	2247	XBK5	A3+	2314	RX3
SM	450	fse	03 - 06	1	2247	XBK5	A3+	2314	RX3
SM	450	fsr	07 -	1	2247	XBK5	A3+	2314	RX3

GILERA

RC	50	Top Rally	90	1	2249	A3+	S4	2249	RX3
RI	50		91 -	1	2249	A3+	S4	T	
RK	50		96 -	1	2249	A3+	S4	2249	RX3
	50	Rally	87 -	1	2249	A3+	S4	T	
	50	Sioux	92	1	2249	A3+	S4	2249	RX3
	125	Apache	91 -	1	2400	A3+	S4	2284	RX3
	125	Cougar	99 -	1	2794	A3+	S4	T	
	125	Crono	92 -	1	2398	A3+	S4	2249	RX3
	125	CX	91 -	1	2398	A3+	S4	2249	RX3
	125	Fast Bike	88 -	1	2794	A3+	S4	2249	RX3
	125	Freestyle	92 -	1	2398	A3+	S4	2249	RX3
	125	GSM	00 -	1	2377	A3+	S4	2377	RX3
	125	HX / HE	83	1	2249	A3+	S4	T	
	125	KK / KR / KZ	86 -	1	2794	A3+	S4	2249	RX3
	125	MX1 / MXR	89 -	1	2398	A3+	S4	2249	RX3
	125	R1 / R1S	90 -	1	2794	A3+	S4	2249	RX3
	125	SP 01	90	1	2398	A3+	S4	2249	RX3
	125	SP 02	90 -	1	2398	A3+	S4	2249	RX3
ER	125	Rally	87	1	2794	A3+	S4	T	
MXR	125		90	1	2794	A3+	S4	2249	RX3
RC	125	Top Rally	90 -	1	2400	A3+	S4	2284	RX3
RRT	125	Nebraska	87	1	2794	A3+	S4	T	
RTX	125		86	1	2794	A3+	S4	T	
RX	125	Arizona Hawk	85	1	2794	A3+	S4	T	
RX	125	Arizona Hawk	86 -	1	2249	A3+	S4	T	
RX	125		83	1	2249	A3+	S4	T	
X 1	125		89	1	2794	A3+	S4	1089	RX3
XR2	125		90	1	2794	A3+	S4	2249	RX3
	200	Arizona Hawk	85	1	2794	A3+		T	
	200	ER	87	1	2794	A3+		T	
	200	Fast Bike	87 -	1	2794	A3+		2249	RX3
RV	200		85 - 86		NA			2249	RX3
RX	200		83	1	2249	A3+		T	
	250	Arizona Hawk	86 -	1	2249	A3+		T	
	250	Arizona Rally	86 -	1	2249	A3+		T	
NGR	250		85 -		NA			2249	RX3
	350	Dakota	85 -	1	2794	A3+		T	
	350	Saturno Bialbero	90 -	1	2247	A3+		2249	RX3
XRT	350		90 -	1	2794	A3+		2249	RX3
	500	Dakota	86	1	2794	A3+		T	
	500	Saturno Bialbero	90 -	1	2247	A3+		2249	RX3
	500	Saturno Piuma	90 -	1	2247	A3+		2249	RX3
	600	Nordwest	91 -	2	2398	XBK5	A3+	2249	RX3
	600	Supersport	03 -	2	1033	XBK5	A3+	2827	RX3
RC	600	Top Rally	90 -	1	2400	A3+		2284	RX3
RC	600		88	1	2794	A3+		2249	RX3
RC	600		89	1	2400	A3+		NA	
XRT	600		89	1	2794	A3+		2249	RX3

HARLEY DAVIDSON

XG	750	Street	14 -	1	2352	A3+		2352	RX3
XL	883	Sportster Standard	00 - 03	1	2958	A3+		2958	RX3
XL	883	Sportster 53c Custom	00 - 03	1	2958	A3+		2958	RX3
XL	883	Sportster Hugger	00 - 03	1	2958	A3+		2958	RX3
XL	883	C Sportster Custom	04 - 08	1	1149	A3+		1150	RX3
XL	883	L 883 Low	04 - 10	1	1149	A3+		1150	RX3
XL	883	N Iron	09 - 13	1	1149	A3+		1150	RX3
XL	883	N Iron	14 -	1	1159	A3+		2813	RX3
XL	883	L Superlow	11 - 13	1	1149	A3+		1150	RX3
XL	883	L Superlow	14 -	1	1159	A3+		2813	RX3
XL	883	R Roadster	10	2	1149	A3+		1150	RX3
XL	883	R Roadster	14 -	1	1159	A3+		2813	RX3
XL	883	R Sportster R	05 - 13	2	1149	A3+		1150	RX3

1 - 2 = Nombre de jeux avant / Number of front sets / Anzahl Sets / Numero blister / Numero des juegos
L = Gauche / Left / Links / Sinistra / Izquierda
R = Droite / Right / Rechts / Destra / Derecha
NA = Non attribué / Not Available / Nicht verfügbar / Non disponible / No disponible

Best choice = Meilleur choix / Empfehlung / Mescola consigliata / Pastilla recomandata
Other choice = Autre choix / Weiterer Auswahlmöglichkeiten / Altra mescola / Otra posibilidad

HARLEY DAVIDSON

				Best choice		Other choice	Best choice	
XLH	883	79 - 81	2	2700	A3+		2718	RX3
XLH	883	82 - 83	2	2700	A3+		2701	RX3
XLH	883 Sportster	84 - 87	1	2699	A3+		2701	RX3
XLH	883 Sportster	87 - 99	1	2699	A3+		2370	RX3
XLH	883 Sportster	00 - 03	1	2958	A3+		2958	RX3
XLH	883 Sportster R «Flat Track»	00 - 03	1	2958	A3+		2958	RX3
XL	1000	78	1	2700	A3+		2718	RX3
XLCH	1000	78 - 80	1	2700	A3+		2718	RX3
XLH	1000 Roadster	83 - 85	2	2700	A3+		2701	RX3
XLH	1000 Sportster	79 - 82	2	2700	A3+		2718	RX3
XLH	1000 Sportster	83 - 85	2	2700	A3+		2701	RX3
XLS	1000 Anniversary	82	2	2700	A3+		2701	RX3
XLS	1000 Roadster	79 - 82	2	2700	A3+		2718	RX3
XLS	1000 Sportster	83	2	2700	A3+		2701	RX3
XLX	1000 61	83	2	2700	A3+		2701	RX3
XLX	1000 61	84	1	2700	A3+		2701	RX3
XR	1000	85	2	2700	A3+		2701	RX3
XLH	1100	87 - 88	1	2699	A3+		2370	RX3
XLH	1100 Sportster	85 - 86	1	2699	A3+		2701	RX3
XLX	1100	86	1	2699	A3+		2701	RX3
VRSCA	1130 V-Rod	02 - 05	2	2958	A3+		2958	RX3
VRSCA	1130 V-Rod	06 -	2	1172	A3+		1172	RX3
VRSCAW	1130 V-Rod	08 -	2	1172	A3+		1172	RX3
VRSCB	1130 V-Rod	04 - 05	2	2958	A3+		2958	RX3
VRSCD	1130 Night Rod	06 -	2	1172	A3+		1172	RX3
VRSCF	1130 Muscle V-Rod	09 -	2	1172	A3+		1172	RX3
VRSCX	1130 V-Rod	08 -	2	1172	A3+		1172	RX3
VRSCDX	1130 Night Rod Special	06 -	2	1172	A3+		1172	RX3
VRSCR	1130 Street Rod	06 -	2	1172	A3+		1172	RX3
FL	1200 FLH Police	75 - 79	1	2599	A3+		2599	RX3
FLH	1200 Anniversary	78	1	2599	A3+		2599	RX3
FLH	1200 Touring	77 - 78	1	2599	A3+		2599	RX3
FLH	1200	80	1	2599	A3+		2702	RX3
FLH	1200	74 - 76	1	2599	A3+		2599	RX3
FLHS	1200	77 - 80	1	2599	A3+		2599	RX3
FX	1200	74 - 80	1	2700	A3+		2599	RX3
FXE	1200	74 - 80	1	2700	A3+		2599	RX3
FXS	1200	78 - 79	1	2700	A3+		2599	RX3
XL	1200 Sportster C Custom	00 - 03	1	2958	A3+		2958	RX3
XL	1200 Sportster S Sport	00 - 03	2	2958	A3+		2958	RX3
XL	1200 Sportster C Custom	04 - 13	1	1149	A3+		1150	RX3
XL	1200 C / CA / CB / CP Custom	14 -	1	1159	A3+		2813	RX3
XL	1200 Sportster L Low	07 - 11	1	1149	A3+		1150	RX3
XL	1200 N Nightster	08 - 12	1	1149	A3+		1150	RX3
XL	1200 Sportster R Roadster	04 - 08	2	1149	A3+		1150	RX3
XL	1200 Superlow T	15 -	1	1159	A3+		2813	RX3
XL	1200 V - Seventy Two	10 - 13	1	1149	A3+		1150	RX3
XL	1200 V - Seventy Two	14 -	1	1159	A3+		2813	RX3
XL	1200 X - Forty Eight	10 - 13	1	1149	A3+		1150	RX3
XL	1200 X - Forty Eight	14 -	1	1159	A3+		2813	RX3
XL	1200 CX - Roadster	16 -	2	1159	A3+		2813	RX3
XLH	1200 Series	88	2	2699	A3+		2370	RX3
XLH	1200 Sportster	90 - 99	1	2699	A3+		2370	RX3
XLH	1200 Sportster	00 - 03	1	2958	A3+		2958	RX3
XR	1200	08 - 10	2	2711	XBK5	A3+	1150	RX3
XR	1200 X	10 - 12	2	2711	XBK5	A3+	1150	RX3
VRSCDX	1250 Night Rod Special	13 -	2	1172	A3+		1172	RX3
FLH	1340 80	78 - 80	1	2599	A3+		2599	RX3
FLH	1340 80	81	1	2599	A3+		2702	RX3
FLH	1340 Classic	82 - 83	1	2718	A3+		2702	RX3
FLH	1340 Electra Glide	82 - 83	1	2718	A3+		2599	RX3
FLH	1340 Electra Glide Speciale	84	1	2599	A3+		2702	RX3
FLH	1340 Heritage	81	1	2718	A3+		2702	RX3
FLHS	1340 Electra Glide Sport	90	2	2699	A3+		2342	RX3
FLHT	1340 Electra Glide	85 - 86	2	2699	A3+		2701	RX3
FLHT	1340 Electra Glide Classic	87 - 99	2	2699	A3+		2370	RX3
FLHTC	1340 Electra Glide Classic	85 - 86	2	2699	A3+		2701	RX3
FLHTC	1340 Electra Glide Classic	93	2	2699	A3+		2370	RX3
FLHTC	1340 Electra Glide Classic	90 - 99	2	2699	A3+		2342	RX3
FLHTC	1340 Ultra Classic	90 - 99	2	2699	A3+		2342	RX3
FLST	1340 Heritage Softail	86 - 87	1	2699	A3+		2342	RX3
FLST	1340 Heritage Softail	90 - 99	1	2699	A3+		2342	RX3
FLSTC	1340 Heritage Softail Classic	90 - 99	1	2699	A3+		2370	RX3
FLSTF	1340 Fat Boy	90 - 99	1	2699	A3+		2370	RX3
FLSTN	1340 Heritage Softail Nost.	93 - 99	2	2699	A3+		2370	RX3
FLT	1340	84 - 85	1	2699	A3+		2702	RX3
FLT	1340 80	80 - 81	1	2718	A3+		2702	RX3
FLT	1340 80 Classic	81	1	2718	A3+		2702	RX3
FLT	1340 Classic	82 - 83	1	2718	A3+		2702	RX3
FLT	1340 Series	88 - 99	2	2699	A3+		2342	RX3
FLT	1340 Tour Glide	82	1	2718	A3+		2702	RX3
FLT/H	1340 Series	86 - 87	2	2699	A3+		2342	RX3
FLTC	1340 Tour Glide Classic	85 - 86	1	2699	A3+		2701	RX3

HARLEY DAVIDSON

				Best choice		Other choice	Best choice	
FLTC	1340 Tour Glide Classic	90	2	2699	A3+		2342	RX3
FLTH	1340 Tour Glide	84 -	1	2700	A3+		2702	RX3
FXB	1340 80	80 - 81	1	2700	A3+		2599	RX3
FXB	1340 Sturgis	82	2	2700	A3+		2599	RX3
FXDB	1340 Dyna Glide Daytona	91 - 99	1	2699	A3+		2370	RX3
FXDB	1340 Dyna Glide Sturgis	91 - 99	1	2699	A3+		2370	RX3
FXDB	1340 Sturgis	91 - 99	1	2699	A3+		2370	RX3
FXDL	1340 Dyna Low Rider	93 - 99	2	2699	A3+		2342	RX3
FXDWG	1340 Dyna Wide Glide	93 - 99	1	2699	A3+		2342	RX3
FXE	1340 80	78 - 81	1	2700	A3+		2599	RX3
FXE	1340 Super Glide	83	1	2700	A3+		2599	RX3
FXE	1340	82	2	2700	A3+		2370	RX3
FXE	1340	85 - 86	1	2699	A3+		2701	RX3
FXEF	1340 80 Fat Bob	79 - 81	1	2700	A3+		2599	RX3
FXLR	1340 Low Rider Custom	87 - 88	1	2699	A3+		2370	RX3
FXLR	1340 Low Rider Custom	93 - 99	1	2699	A3+		2370	RX3
FXR	1340 Sport Glide GTE	85 - 86	2	2699	A3+		2701	RX3
FXR	1340 Super Glide	82 - 83	1	2700	A3+		2701	RX3
FXR	1340 Super Glide	85 - 86	1	2699	A3+		2701	RX3
FXR	1340 Super Glide	90 - 99	1	2699	A3+		2370	RX3
FXR	1340	78 - 81	1	2700	A3+		2599	RX3
FXR	1340	87 - 88	1	2699	A3+		2370	RX3
FXRS	1340 Low Glide	82 - 84	2	2700	A3+		2701	RX3
FXRS	1340 Low Rider	85 - 86	2	2699	A3+		2701	RX3
FXRS	1340 Low Rider Sport	87 - 99	2	2699	A3+		2370	RX3
FXRS	1340 Low Rider Sport Edition	90 - 99	2	2699	A3+		2370	RX3
FXRS	1340 Low Rider Sport, Convert.	90 - 99	2	2699	A3+		2370	RX3
FXRS	1340 Super Glide II	82 - 83	2	2700	A3+		2701	RX3
FXRT	1340 Sport Glide	85 - 86	2	2699	A3+		2701	RX3
FXRT	1340 Sport Glide	90 - 99	2	2699	A3+		2370	RX3
FXRT	1340 Super Glide II	83	1	2700	A3+		2701	RX3
FXS	1340 80	79 - 81	1	2700	A3+		2599	RX3
FXS	1340 Low Rider	82	2	2700	A3+		2599	RX3
FXSB	1340 Low Rider	83	2	2700	A3+		2701	RX3
FXST	1340 Softail	84 - 86	1	2699	A3+		2701	RX3
FXSTC	1340 Softail Custom	85 - 86	1	2699	A3+		2701	RX3
FXSTC	1340 Softail Custom	88 - 99	1	2699	A3+		2370	RX3
FXSTS	1340 Springer Softail	90 - 99	1	2699	A3+		2370	RX3
FXTZ	1340 Series	88	2	2699	A3+		2370	RX3
FXWG	1340 80	80 - 81	1	2700	A3+		2599	RX3
FXWG	1340 Wide Glide	82	2	2700	A3+		2370	RX3
FXWG	1340 Wide Glide	83	2	2700	A3+		2599	RX3
FXWG	1340 Wide Glide	84	1	2700	A3+		2701	RX3
FXWG	1340 Wide Glide	85 - 86	1	2699	A3+		2701	RX3
FXWG	1340	87 - 88	1	2699	A3+		2701	RX3
	1340 Dyna Glide Daytona	91 -	1	2699	A3+		2370	RX3
	1340 Dyna Glide Sturgis	91 -	2	2699	A3+		2370	RX3
FLHR/FLHRI	1450 Road King	00 - 04	2	2958	A3+		2958	RX3
FLHRC/FLHRCI	1450 Road King Classic	00 - 04	2	2958	A3+		2958	RX3
FLHRS/FLHRSI	1450 Road King Custom	04 - 06	2	2958	A3+		2958	RX3
FLHT/FLHTI	1450 Electra Glide Standard	00 - 06	2	2958	A3+		2958	RX3
FLHTC/FLHTCI	1450 Electra Glide Classic	00 - 06	2	2958	A3+		2958	RX3
FLHTCUI	1450 Electra Glide Ultra Classic	00 - 06	2	2958	A3+		2958	RX3
FLHXI	1450 Street Glide	06 -	2	2958	A3+		2958	RX3
FLSTC/FLSTCI	1450 Heritage Classic	00 - 04	1	2958	A3+		2958	RX3
FLSTC/FLSTCI	1450 Softail	05 - 06	1	2958	A3+		2958	RX3
FLSTF/FLSTFI	1450 Fat Boy	00 - 06	1	2958	A3+		2958	RX3
FLSTI	1450 Heritage Softail	06 -	1	2958	A3+		1211	RX3
FLSTN/FLSTNI	1450 Softail Deluxe	05 - 06	1	2958	A3+		2958	RX3
FLSTS	1450 Heritage Springer	00 - 03	1	2699	A3+		2958	RX3
FLSTSC/FLSTSCI	1450 Springer Classic	05 -	1	2699	A3+		2958	RX3
FLSTSC/FLSTSCI	1450 Springer Softail Classic	06 - 07	1	2699	A3+		1237	RX3
FLTR/FLTRI	1450 Road Glide Classic	00 - 06	2	2958	A3+		2958	RX3
FXD	1450 Dyna Super Glide	00 - 03	1	2958	A3+		2958	RX3
FXDBI	1450 Dyna Street Bob	06	1	2958	A3+		2958	RX3
FXDC/FXDCI	1450 Dyna Super Glide Custom	05 - 06	1	2958	A3+		2958	RX3
FXDI	1450 35th Anniversary Super Glide	06 -	1	2958	A3+		1211	RX3
FXDI	1450 Dyna Super Glide	04 - 06	1	2958	A3+		2958	RX3
FXDL	1450 Dyna Low Rider	00 - 03	2	2958	A3+		2958	RX3
FXDLI	1450 Dyna Low Rider	04 - 06	1	2958	A3+		2958	RX3
FXDS-CON	1450 Dyna Convertible	00 - 02	2	2958	A3+		2958	RX3
FXDWG	1450 Dyna Wide Glide	00 - 03	2	2958	A3+		2958	RX3
FXDWGI	1450 Dyna Wide Glide	04 - 06	1	2958	A3+		2958	RX3
FXDX	1450 Dyna Super Glide Sport	00 - 03	2	2958	A3+		2958	RX3
FXDXI	1450 Dyna Super Glide Sport	04 - 06	2	2958	A3+		2958	RX3
FXDXT	1450 Dyna Super Glide T-Sport	00 - 03	2	2958	A3+		2958	RX3
FXST/FXSTI	1450 Softail Standard	00 - 05	1	2958	A3+		2958	RX3
FXST/FXSTI	1450 Softail Standard	06 - 07	1	2958	A3+		1237	RX3
FXSTB/FXSTBI	1450 Night Train	00 - 04	1	2958	A3+		2958	RX3
FXSTBI	1450 Night Train	06 -	1	2958	A3+		1211	RX3
FXSTB/FXSTBI	1450 Night Train Softail	06 - 07	1	2958	A3+		1237	RX3
FXSTD/FXSTDI	1450 Softail Deuce	00 - 04	1	2958	A3+		2958	RX3
FXSTDI	1450 Softail Deuce	05 - 06	1	2958	A3+		1211	RX3

1 - 2 = Nombre de jeux avant / Number of front sets / Anzahl Sets / Numero blister / Numero des juegos
L = Gauche / Left / Links / Sinistra / Izquierda
R = Droite / Right / Rechts / Destra / Derecha
NA = Non attribué / Not Available / Nicht verfügbar / Non disponible / No disponible

Best choice = Meilleur choix / Empfehlung / Mescola consigliata / Pastilla recomandata
Other choice = Autre choix / Weiterer Auswahlmöglichkeiten / Altra mescola / Otra posibilidad

HARLEY DAVIDSON

				Best choice		Other choice	Best choice	
FXSTS/FXSTSI	1450 Softail Springer	00 - 04	1	2699	A3+		2958	RX3
FXSTS/FXSTSI	1450 Softail Springer	05 -	1	2699	A3+		2958	RX3
FXSTSI	1450 Softail	06 -	1	2958	A3+		1211	RX3
FXST/FXSTI	1450 Softail Standard	06 - 07	1	2958	A3+		1237	RX3
FLHR	1584 Road King	08 -	2	1172	A3+		1172	RX3
FLHRC	1584 Road King Classic	08 -	2	1172	A3+		1172	RX3
FLHT	1584 Electra Glide Standard	08 -	2	1172	A3+		1172	RX3
FLHTC	1584 Electra Glide Classic	08 -	2	1172	A3+		1172	RX3
FLHTCI	1584 Ultra Electra Glide Classic	08 -	2	1172	A3+		1172	RX3
FLHX	1584 Street Glide	08 -	2	1172	A3+		1172	RX3
FLSTC	1584 Heritage Softail Classic	07 - 08	1	2958	A3+		1211	RX3
FLSTC	1584 Heritage Softail Classic	08 - 14	1	1212	A3+		1213	RX3
FLSTC	1584 Heritage Softail Classic	15 -	1	2711	A3+		1213	RX3
FLSTC	1584 Heritage Softail Deluxe	15 -	1	2711	A3+		1213	RX3
FLSTF	1584 Fat Boy	07	1	2958	A3+		1237	RX3
FLSTF	1584 Fat Boy	08 -	1	1212	A3+		1213	RX3
FLSTF	1584 Fat Boy	15 -	1	2711	A3+		1213	RX3
FLSTN	1584 Softail Deluxe	07 -	1	2958	A3+		1211	RX3
FLSTN	1584 Softail Deluxe	08 -	1	1212	A3+		1213	RX3
FLSTSCI	1584 Softail	07 -	1	2958	A3+		1211	RX3
FLTR	1584 Road Glide	08 -	2	1172	A3+		1172	RX3
FXCW	1584 Rocker	08 -	1	1212	A3+		1213	RX3
FXCWC	1584 Rocker C	08 -	1	1212	A3+		1213	RX3
FXD	1584 Dyna Super Glide	07 -	1	2958	A3+		1211	RX3
FXD	1584 Dyna Super Glide	08 -	1	1212	A3+		1213	RX3
FXDB	1584 Dyna Street Bob	07	1	2958	A3+		1211	RX3
FXDB	1584 Dyna Street Bob	08 -	1	1212	A3+		1213	RX3
FXDC	1584 Dyna Super Glide Custom	07 -	1	2958	A3+		1211	RX3
FXDC	1584 Dyna Super Glide Custom	08 -	1	1212	A3+		1213	RX3
FXDF	1584 Fat Bob	08 -	1	1212	A3+		1213	RX3
FXDL	1584 Dyna Low Rider	07 -	1	2958	A3+		1211	RX3
FXDL	1584 Dyna Low Rider	08 -	1	1212	A3+		1213	RX3
FXDWG	1584 Dyna Wide Glide	07 -	1	2958	A3+		1211	RX3
FXDWG	1584 Dyna Wide Glide	08 -	1	1212	A3+		1213	RX3
FXST	1584 Softail Standard	07 -	1	2958	A3+		1211	RX3
FXST	1584 Softail Standard	08 - 14	1	1212	A3+		1213	RX3
FXST	1584 Softail Standard	15 -	1	2711	A3+		1213	RX3
FXSTB	1584 Night Train	07 -	1	2958	A3+		1211	RX3
FXSTB	1584 Night Train	08 -	1	1212	A3+		1213	RX3
FXSTC	1584 Softail Custom	07	1	2958	A3+		1237	RX3
FXSTC	1584 Softail Custom	08 -	1	1212	A3+		1213	RX3
FXSTD	1584 Softail Deuce	07 -	1	2958	A3+		1211	RX3
FLHR	1584 Road King	07 -	2	2958	A3+		1211	RX3
FLHRC	1584 Road King Classic	07 -	2	2958	A3+		1211	RX3
FLHRS	1584 Road King Custom	07 -	2	2958	A3+		1211	RX3
FLHTC	1584 Electra Glide Classic	07 -	2	2958	A3+		1211	RX3
FLHT	1584 Electra Glide Standard	07 -	2	2958	A3+		1211	RX3
FLHTCU	1584 Ultra Classic Electra Glide	07 -	2	2958	A3+		1211	RX3
FLHX	1584 Street Glide	07 -	2	2958	A3+		1211	RX3
FLSTF	1584 Fat Boy	07 -	1	2958	A3+		1211	RX3
FLSTN	1584 Softail Deluxe	07 -	1	2958	A3+		1211	RX3
FLS	1690 Softail Slim	12 - 14	1	1212	A3+		1213	RX3
FLS	1690 Softail Slim	15 -	1	2711	A3+		1213	RX3
FLD	1690 Switchback	12 -	1	1212	A3+		1213	RX3
FLHR	1690 Road King	11 -	2	1172	A3+		1172	RX3
FLHRC	1690 Road King Classic	11 -	1	1212	A3+		1213	RX3
FLHTC	1690 Electra Glide Classic	11 -	1	1212	A3+		1213	RX3
FLHTCU	1690 Ultra Classic Electra Glide	11 -	2	1172	A3+		1172	RX3
FLHTCUL	1690 Electra Glide Ultra Classic Low	15 -	2	1172	A3+		1172	RX3
FLHTCUTG	1690 Tri Glide Ultra Classic Trike	09 - 13	2	1172	A3+		NA	
FLHTK	1690 Ultra Classic Electra Glide	10 -	2	1172	A3+		1172	RX3
FLHTK	1690 Ultra Electra Glide	11 -	1	1212	A3+		1213	RX3
FLHTKL	1690 Ultra Limited Low	15 -	2	1172	A3+		1172	RX3
FLHX	1690 Street Glide	11 -	2	1172	A3+		1172	RX3
FLHXS	1690 Street Glide Special	14 -	2	1172	A3+		1172	RX3
FLHXXX	1690 Street Glide Trike	10 -	2	1172	A3+		NA	
FLS	1690 Softail Slim	12 - 14	1	1212	A3+		1213	RX3
FLSTC	1690 Heritage Softail Classic	12 -	1	1212	A3+		1213	RX3
FLSTF	1690 Fat Boy	12 - 14	1	1212	A3+		1213	RX3
FLSTF	1690 Fat Boy	15 -	1	2711	A3+		1213	RX3
FLSTF	1690 Fat Boy Special	12 -	1	1212	A3+		1213	RX3
FLSTFB	1690 Fat Boy	12 -	1	1212	A3+		1213	RX3
FLSTN	1690 Softail Deluxe	12 -	1	1212	A3+		1213	RX3
FLTRX	1690 Road Glide	15 -	2	1172	A3+		1172	RX3
FLTRXS	1690 Road Glide Special	15 -	2	1172	A3+		1172	RX3
FXDB	1690 Dyna Street Bob	14 -	1	1212	A3+		1213	RX3
FXDBA	1690 Dyna Street Bob	13 -	1	1212	A3+		1213	RX3
FXDBB	1690 Dyna Street Bob	14 -	1	1212	A3+		1213	RX3
FXDBP	1690 Dyna Street Bob	13 -	1	1212	A3+		1213	RX3
FXDC	1690 Dyna Super Glide Custom	14 -	1	1212	A3+		1213	RX3
FXDF	1690 Dyna Wide Glide	12 -	1	1212	A3+		1213	RX3
FXDF	1690 Fat Bob	12 -	2	1212	A3+		1213	RX3
FXDL	1690 Dyna Low Rider	14 -	2	1212	A3+		1213	RX3

HARLEY DAVIDSON

				Best choice		Other choice	Best choice	
FXS	1690 Blackline	13 -	1	1212	A3+		1213	RX3
FXSB	1690 Breakout	13 - 14	1	1212	A3+		1213	RX3
FXSB	1690 Breakout	15 -	1	2711	A3+		1213	RX3
FLHRSE5	1802 CVO Road King	14 -	2	1172	A3+		1172	RX3
FLHTKSE	1802 CVO Limited	14 -	2	1172	A3+		1172	RX3
FLHXSE	1802 CVO Street Glide	10 -	2	1172	A3+		1172	RX3
FLSTNSE	1802 CVO Softail Deluxe	14 -	2	1172	A3+		1172	RX3
FLTRUSE	1802 CVO Road Glide Ultra	11 -	1	1172	A3+		1172	RX3
FXSBSE	1802 CVO Breakout	13 -	1	1212	A3+		1213	RX3

HERCULES

	50 Silver Star Classic	93 -	1	2332	A3+	S4	T	
GP	50 Supra	80 -	1	2466	A3+		T	
ZX	50	86 -	1	2249	A3+	S4	T	
	50 Ultra	79 - 83	1	2332	A3+	S4	T	

HIGHLAND

	950 Outback V2	99 -	1	2352	XBK5	A3+	2353	RX3
	950 V2 Motard	00 -	1	2352	XBK5	A3+	2353	RX3

HM

CR	125 X Supermotard	04 - 06	1	2300	XBK5	A3+	1076	X59
CRE	125 X Supermotard	02 - 06	1	2300	XBK5	A3+	2314	RX3
CRM	125 X Supermotard	07	1	1129	XBK5		1076	X59
CRE	250 Supermotard	02 - 03	1	2300	XBK5	A3+	2314	RX3
CRF	250 Supermotard	04 - 06	1	2300	XBK5	A3+	1076	X59
CRM	250 X Supermotard	07 -	1	1129	XBK5		1076	X59
CRF	450 R Supermotard	02 - 06	1	2300	XBK5	A3+	1076	X59
CRM	450 F Supermotard R	07 - 08	1	1129	XBK5		1076	X59
CRM	450 F Supermotard X	07	1	1129	XBK5		1076	X59
CRM	490 F Supermotard X	07	1	1129	XBK5		1076	X59

HONDA

CB	50 (All models)	80 - 81	1	2408	A3+	S4	T	
CRM	50 (Spain)	93 - 96	1	2300	A3+	S4	T	
CRM	50	88 - 92	1	2408	A3+	S4	2314	RX3
CRM	50	93 - 96	1	2408	A3+	S4	2314	RX3
MB	50 S	80 - 82	1	2408	A3+	S4	T	
MBX	50	80 - 82	1	2408	A3+	S4	T	
MBX	50 S	83 - 85	1	2621	S4		T	
MRX	50	88 -	1	2408	A3+	S4	T	
NS	50 F Aero	88 -	1	2621	S4		T	
NS-1	50	91 -	1	2621	S4		T	
NSR	50	89 - 90	1	2621	S4		T	
R	50 Monkey	88 -	1	2287	S4		T	
CRM	75 R	90 - 94	1	2302	A3+	S4	2314	RX3
NS-1	75	92 -	1	2326	A3+	S4	2314	RX3
NSR	75 FII	88 - 00	1	2621	S4		T	
CB	80	80 - 81	1	2408	A3+	S4	T	
MB	80	80 -	1	2469	S4		T	
MBX	80	83 - 86	1	2621	S4		T	
MBX	80	86 -	1	2451	A3+	S4	T	
MBX	80 DX	82 -	1	2621	S4		T	
MBX	80 FWD	83 - 86	2	2408	A3+	S4	T	
MBX	80 SW / SWD	83 -	1	2621	S4		T	
MCX	80	82 -	1	2469	S4		T	
MTX	80 R	87 -	1	2451	A3+	S4	T	
NSR	80 R	87 - 92	1	2621	S4		2314	RX3
NSR	80 R	93 -	1	2326	A3+	S4	2314	RX3
CA	125 Rebel	95 - 96	1	2288	A3+	S4	T	
CA	125 Rebel	97 -	1	2794	A3+	S4	T	
CB	125 RS	83 -	1	2408	A3+	S4	T	
CB	125 T Superdream	82 -	1	2382	A3+	S4	T	
CB	125 TDC	83 - 89	1	2289	A3+	S4	T	
CB	125 TT	90	1	2248	A3+	S4	T	
CBF	125	09 -	1	1148	A3+		T	
CBR	125 R	04 - 10	1	1148	XBK5	A3+	1067	RX3
CBR	125 R	11 -	1	1148	XBK5	A3+	2298	RX3
CBX	125 Custom	88	1	2621	A3+	S4	T	
CBX	125 F	84 - 88	1	2382	A3+	S4	T	
CG	125	04 -	1	2408	A3+	S4	T	
CLR	125 CityFly	98 -	1	2794	A3+	S4	T	
CRM	125 / R	90 - 98	1	2794	A3+	S4	2249	RX3
MBX	125 RWB	84 -	1	2621	A3+	S4	T	
MSX	125 D-Grom	13 - 14	1	1148	A3+		NA	
MT	125 R	78 -	1	2814	A3+	S4	T	
MTX	125 Camel (Italy)	88 -	1	2794	A3+	S4	T	
MTX	125 R	84 - 95	1	2451	A3+	S4	T	
MTX	125 R (Italy)	86	1	2794	A3+	S4	T	

1 - 2 = Nombre de jeux avant / Number of front sets / Anzahl Sets / Numero blister / Numero des juegos
L = Gauche / Left / Links / Sinistra / Izquierda
R = Droite / Right / Rechts / Destra / Derecha
NA = Non attribué / Not Available / Nicht verfügbar / Non disponible / No disponible

Best choice = Meilleur choix / Empfehlung / Mescola consigliata / Pastilla recomandata
Other choice = Autre choix / Weiterer Auswahlmöglichkeiten / Altra mescola / Otra posibilidad

HONDA

						Best choice	Other choice		Best choice
NS	125	(Italy)	85 - 88	1	2794	A3+	S4	T	
NS	125		89	1	2245	A3+	S4	2287	RX3
NSR	125	F	88 - 89	1	2451	A3+	S4	T	
NSR	125	F / R	90 - 92	1	2794	A3+	S4	2249	RX3
NSR	125	R (Italy)	89 -	1	2794	A3+	S4	2249	RX3
NX	125	Transcity	90 - 98	1	2794	A3+	S4	T	
RS	125	R	91 - 94	1	2256	XBK5	A3+	2287	RX3
RS	125	R	95 -	1	1157	XBK5		2287	RX3
RTV	125	NRS (Italy)	87 -	1	2794	A3+	S4	T	
VT	125	Shadow	99 -	1	2326	A3+	S4	T	
XL	125	R	86	1	2451	A3+	S4	T	
XL	125	R / PD / (Italy)	85	1	2794	A3+	S4	T	
XL	125	R / PD / Italy EX	87 -	1	2794	A3+	S4	T	
XLR	125	R	98 -	1	2256	A3+	S4	T	
XLV	125	Varadero	01 -	1	2326	A3+	S4	1067	RX3
XR	125	L	03 -	1	2300	A3+	S4	T	
CBR	150	R	00 -	1	1148	XBK5	A3+	1067	RX3
CG	150		04 -	1	2408	A3+		T	
CRF	150	F	03 -	1	2300	A3+		T	
NS	150		92 -	1	2314	S4		T	
NSR	150		02 -	1	2326	A3+		2288	RX3
CTX	200		04 -	1	2300	A3+		T	
MTX	200	R	85 -	1	2451	A3+		T	
XL	200	R / PD / (Italy)	85 -	1	2794	A3+		T	
SL	230		97 -	1	2300	A3+		2314	RX3
AX-1	250		90	1	2302	A3+		T	
CA	250	Rebel	90 -	1	2326	A3+		T	
CB	250		88 - 91	1	2310	A3+		T	
CB	250		92 - 05	1	2256	A3+		T	
CB	250	Rebel	86 -	1	2621	A3+		T	
CB	250	RS	85 -	1	2451	A3+		T	
CBF	250		04 -	1	2326	A3+		T	
CBR	250	F	86 -	2	2252	XBK5	A3+	T	
CBR	250	Hurricane	87 -	2	2252	XBK5	A3+	2298	RX3
CBR	250	Nighthawk	92 -	1	2256	XBK5	A3+	T	
CBR	250	R / RR	90 - 92	2	2256	XBK5	A3+	1250	RX3
CBR	250	RJ	88	2	2256	XBK5	A3+	2298	RX3
CBR	250	R	11 -	1	2256	A3+		2298	RX3
CBR	250	R ABS	11 -	1	1159	A3+		2298	RX3
CBR	250	RAB / RAC (ABS)	11 - 13	1	1159	A3+		1250	RX3
CBR	250	RB / RC (Non ABS)	11 - 13	1	2256	A3+		1250	RX3
CBX	250	RSE	84 -	1	2289	A3+		T	
CBX	250	S	88 -	1	2382	A3+		T	
CD	250	UJ	88 - 92	1	2310	A3+		T	
CMX	250	C Rebel	96 -	1	2288	A3+		T	
CMX	250	Rebel	85 -	1	2621	A3+		T	
CRM	250	R	90 -	1	2302	A3+		T	
FTR	250		86 -	1	2451	A3+		2451	RX3
GB	250	Clubman	88 -	1	2289	A3+		T	
NS	250	R	85	2	2382	A3+		2289	RX3
NS	250		89	1	2245	A3+		2287	RX3
NSR	250	R	87 -	2	2252	XBK5	A3+	2289	RX3
NSR	250	RJ	88 -	2	2245	A3+		2298	RX3
NSR	250	R / SP	90	2	2245	A3+		2298	RX3
NX	250		88 - 90	1	2302	A3+		T	
RS	250	R	93 -	2	1157	XBK5		2287	RX3
RS	250	R	91 - 92	2	2245	XBK5	A3+	2298	RX3
VT	250	F	88 - 90	1	2252	XBK5	A3+	T	
VT	250	Spada	89	1	2256	XBK5	A3+	2298	RX3
VTR	250		90	1	2252	XBK5	A3+	T	
VTR	250		98 -	1	2313	A3+		2298	RX3
VTZ	250		88 -	1	2252	A3+		T	
XL	250	Degree	91 -	1	2302	A3+		T	
XL	250	R	84 - 87	1	2451	A3+		T	
XLR	250	R	88 -	1	2451	A3+		T	
XLR	250	R Baja	88 - 90	1	2302	A3+		T	
XLR	250	R SPL	94 -	1	2300	A3+		2314	RX3
	250	Steed	93 -	1	2256	A3+		T	
	250		86 -	1	2621	A3+		NA	
CB	300	FAF / FAG (ABS)	15 -	1	2256	A3+		1250	RX3
CBR	300	F	14 -	1	2256	A3+		2298	RX3
CBR	300	R	14 -	1	2256	A3+		2298	RX3
CBR	300	RA (ABS)	14 - 15	1	2313	A3+		1250	RX3
CB	350	S. G.	87 - 90	2	2252	A3+		T	
NX	350		92 -	1	2252	A3+		T	
XL	350	R	84 - 85	1	2451	A3+		T	
	400	Xelvis		1	2289	A3+		2289	RX3
CB	400	Four	81 -	2	2289	A3+		T	
CB	400	Hawk	81 -	1	2289	A3+		T	
CB	400	N	78 - 81	1	2814	A3+		T	
CB	400	N	82 - 85	1	2289	A3+		T	
CB	400	N	86 -	1	2252	A3+		T	
CB	400	NZ	- 79	1	2814	A3+		T	

HONDA

						Best choice	Other choice		Best choice
CB	400	Super Four	92 - 95	2	2313	A3+		2298	RX3
CB	400	Twin	82 -	1	2289	A3+		T	
CB	400		82 -	2	2289	A3+		2289	RX3
CB-1	400	(CB 400 F)	89 - 90	1	2256	A3+		2298	RX3
CBR	400	F / FII	85	2	2289	A3+		2289	RX3
CBR	400	RR	87 -	2	2256	XBK5	A3+	2298	RX3
CBR	400	R	87	2	2252	XBK5	A3+	2289	RX3
CBR	400	R	88 - 93	2	2256	XBK5	A3+	2298	RX3
CBR	400	F	92 -	2	2252	XBK5	A3+	2296	RX3
CM	400	C	81	1	2382	A3+		T	
CM	400	T	82 -	1	2289	A3+		T	
CX	400		81	1	2814	A3+		T	
GB	400	TT	88 -	1	2289	A3+		T	
GL	400		77 - 80	1	2814	A3+		T	
NS	400	R	85 - 87	2	2382	A3+		2289	RX3
NTV	400	Bros II	88	1	2245	A3+		2298	RX3
NV	400	Custom	88		NA			2289	RX3
RVF	400	RR (NC35)	90 - 96	2	2245	A3+		2385	RX3
VF	400	Integra	86 -	1	2382	A3+		2382	RX3
VFR	400	R NC21 / NC21 Z	86 -	2	2252	XBK5	A3+	2252	RX3
VFR	400	R NC24	87 -	2	2252	XBK5	A3+	2385	RX3
VFR	400	R NC30	89 -	2	2245	A3+		2298	RX3
VRX	400	T Roadstar	95 -	1	2313	A3+		2298	RX3
VTR	400	R	90	2	2245	A3+		2385	RX3
NV	400	Steed	88	1	2310	A3+		T	
NV	400	Steed	92 - 93	1	2256	A3+		T	
XR	400	Supermotard	00 -	1	2300	XBK5	A3+	2314	RX3
CB	450	SC Nighthawk	83 - 86	1	2382	A3+		T	
CB	450	T	82 -	1	2289	A3+		T	
CB	450	S	86 -	2	2252	A3+		T	
CM	450	A / C	82 -	1	2289	A3+		T	
CMX	450	Rebel	86 -	1	2289	A3+		T	
CB	500		94 - 96	1	2256	A3+		T	
CB	500		97 - 03	1	2396	A3+		2353	RX3
CB	500	F / F ABS	13 -	1	2313	A3+		2298	RX3
CB	500	FD / FE / FF (Non ABS)	13 - 16	1	2313	A3+		1250	RX3
CB	500	FAD / FAE / FAF / FAG (ABS)	13 - 16	1	2313	A3+		1250	RX3
CB	500	X / X ABS	13 -	1	2313	A3+		2298	RX3
CBF	500		04 -	1	2256	A3+		2296	RX3
CBF	500	ABS	04 -	1	1159	A3+		2296	RX3
CBR	500	F (Austria)	87 - 90	2	2252	A3+		2289	RX3
CBR	500	R / (ABS)	13 -	1	2313	A3+		2298	RX3
CMX	500	Rebel	17 -	1	2313	A3+		2298	RX3
CX	500	C	81 - 82	2	2289	A3+		T	
CX	500	Euro	82 -	2	2382	A3+		2382	RX3
CX	500	Silver W Turbo	83 -	2	2289	A3+		2289	RX3
CX	500	Turbo	82 -	2	2289	A3+		2382	RX3
CX	500		78 - 80	1	2814	A3+		T	
CX	500		81 -	2	2382	A3+		T	
FT	500		82 -	2	2289	A3+		2289	RX3
GB	500	TT	88 -	1	2289	A3+		T	
GL	500	D	81 -	2	2289	A3+		T	
GL	500	I	81 - 82	2	2382	A3+		T	
GL	500		82	2	2382	A3+		2289	RX3
NS	500	R	85 -	2	2289	A3+		2289	RX3
NX	500	Dominator (Austria)	88 - 92	1	2248	A3+		2298	RX3
NX	500	Dominator (Austria)	93 - 96	1	2310	A3+		2298	RX3
NX	500	Dominator (Austria)	97 -	1	2352	A3+		2353	RX3
VF	500	F / FII	84 - 86	2	2289	A3+		2289	RX3
VT	500	C Shadow	83 - 86	1	2289	A3+		T	
XBR	500	S	85 -	1	2289	A3+		T	
XLR	500	R	83 -	1	2451	A3+		T	
CB	550	SC	83 -	1	2289	A3+		T	
	600	Steed	88 - 91	1	2310	A3+		T	
	600	Steed	92 -	1	2256	A3+		T	
CB	600	Hornet (Japan model)	98 -	2	2711	XBK5	A3+	2296	RX3
CB	600	F Hornet	98 - 06	2	2256	XBK5	A3+	2296	RX3
CB	600	F Hornet S	00 - 06	2	2256	XBK5	A3+	2296	RX3
CB	600	Hornet	07 -	2	2256	XBK5	A3+	1174	RX3
CB	600	Hornet ABS	07 -	2	1159	XBK5	A3+	2296	RX3
CB	600	Hornet Wakizashi	06	2	2256	XBK5	A3+	2296	RX3
CBF	600	N / S - ABS	04 - 07	2	2256	XBK5	A3+	2296	RX3
CBF	600	N / S - ABS	08 -	2	1159	XBK5	A3+	2296	RX3
CBR	600	F Hurricane	87 - 90	2	2252	XBK5	A3+	2289	RX3
CBR	600	F2 / F2 Supersport	91 - 94	2	2252	XBK5	A3+	2296	RX3
CBR	600	F3	95 - 98	2	2256	XBK5	A3+	2296	RX3
CBR	600	F4 / F4 Sport	99 - 00	2	2711	XBK5	A3+	2296	RX3
CBR	600	F4i / F4i Sport	01 - 10	2	2711	XBK5	A3+	2296	RX3
CBR	600	F	11 -	2	2256	XBK5	A3+	1174	RX3
CBR	600	F ABS	11 -	2	1159	XBK5	A3+	2296	RX3
CBR	600	RR	03 - 04	2	2711	XBK5	A3+	2296	RX3
CBR	600	RR (Rad.cal)	05 - 06	2	1134	XBK5	A3+	2296	RX3
CBR	600	RR (Rad.cal)	07 -	2	1134	XBK5	A3+	1174	RX3

1 - 2 = Nombre de jeux avant / Number of front sets / Anzahl Sets / Numero blister / Numero des juegos
L = Gauche / Left / Links / Sinistra / Izquierda
R = Droite / Right / Rechts / Destra / Derecha
NA = Non attribué / Not Available / Nicht verfügbar / Non disponible / No disponible

Best choice = Meilleur choix / Empfehlung / Mescola consigliata / Pastilla recomandata
Other choice = Autre choix / Weiterer Auswahlmöglichkeiten / Altra mescola / Otra posibilidad

HONDA

					Best choice		Other choice	Best choice	
CBR	600	RR (Rad.cal) - ABS	09 -	2	1134	XBK5	A3+	1174	RX3
CBX	600	E	85 -	2	2289	A3+		T	
NTV	600	Bros	88 -	1	2245	A3+		2298	RX3
NTV	600	Revere	88 -	1	2252	A3+		2298	RX3
NV	600	C	88 -	1	2310	A3+		T	
VT	600	C Shadow	88 - 93	1	2248	A3+		T	
VT	600	C Shadow	94 - 03	1	2256	A3+		T	
VT	600	CD Shadow VLX	94 -	2	2256	A3+		T	
XL	600	LM / RM	85 -	1	2289	A3+		T	
XL	600	R	83 - 87	1	2451	A3+		T	
XL	600	V Transalp	87 - 90	1	2289	A3+		T	
XL	600	V Transalp	91 - 93	1	2248	A3+		2298	RX3
XL	600	V Transalp	94 - 96	1	2313	A3+		2298	RX3
XL	600	V Transalp	97 - 99	2	2300	A3+		2298	RX3
XLM	600	LM	87 -	1	2451	A3+		T	
CB	650	SC Nighthawk	83 - 85	2	2289	A3+		T	
CB	650		85 -	2	2289	A3+		T	
CB	650	F ABS	14 -	2	2256	A3+		1250	RX3
CBR	650	F ABS	14 -	2	2256	A3+		1250	RX3
CBX	650	ED / SC / SCD	83 -	2	2289	A3+		T	
CX	650	C	83 -	2	2289	A3+		T	
CX	650	E	83 -	2	2382	A3+		2289	RX3
CX	650	Turbo	83 -	2	2289	A3+		2289	RX3
GL	650	D	83 -	2	2289	A3+		T	
FMX	650		05 -	1	2256	XBK5	A3+	2296	RX3
NT	650	Hawk GT	88 - 91	1	2256	A3+		2298	RX3
NT	650	V Deauville	98 - 01	2	2396	A3+		2298	RX3
NT	650	V Deauville	02 - 05	2	2602	A3+		2602	RX3
NTV	650	Bros	88 -	2	2245	A3+		2298	RX3
NTV	650	Revere	88 - 93	1	2256	A3+		2298	RX3
NTV	650		94 -	2	2313	A3+		2298	RX3
NX	650	Dominator	93 - 96	1	2310	A3+		2298	RX3
NX	650	Dominator	97 -	1	2396	A3+		2353	RX3
NX	650	Dominator J / K	88 - 92	1	2248	A3+		2298	RX3
SLR	650		97 -	1	2396	A3+		2353	RX3
XL	650	V Transalp	00 -	2	2300	A3+		2298	RX3
XRV	650	Africa Twin	88 - 90	1	2248	A3+		2298	RX3
	650	Vigor	99 -	1	2396	A3+		2353	RX3
DN-01	680		08 -	2	1159	A3+		2313	RX3
CB	700	SC	84 - 86	2	2289	A3+		T	
CTX	700	DE / DCT	14 -	1	2313	A3+		1250	RX3
CTX	700	N / DCT	14 - 15	1	2313	A3+		1250	RX3
NC	700	Integra	12 - 14	1	1159	A3+		2296	RX3
NC	700	S (Auto gearbox)	12 -	1	1159	A3+		2296	RX3
NC	700	S (Manual gearbox)	12 -	1	1159	A3+		2298	RX3
NC	700	X (Non ABS)	12 - 13	1	2313	A3+		2298	RX3
NC	700	X (Auto gearbox)	12 -	1	1159	A3+		2296	RX3
NC	700	X (Manual gearbox)	12 -	1	1159	A3+		2298	RX3
NM4	700	Vultus ABS DCT	14 -	1	2256	A3+		2298	RX3
NT	700	Deauville / ABS	06 -	2	1159	XBK5	A3+	2602	RX3
VF	700	C Magna	84	2	2289	A3+		T	
VF	700	C Magna	85 - 86	2	2382	A3+		T	
VF	700	C Magna	87	1	2289	A3+		T	
VF	700	F Interceptor	84 - 85	2	2382	A3+		2289	RX3
VF	700	S	84 - 85	2	2289	A3+		T	
VFR	700	F / F2	86 - 87	2	2310	A3+		2289	RX3
VFR	700	F Interceptor	88 - 89	2	2256	XBK5	A3+	2298	RX3
VT	700	C Shadow	87	1	2289	A3+		T	
XL	700	Transalp	08 -	2	2300	A3+		2298	RX3
XL	700	Transalp ABS	08 -	2	1159	A3+		2296	RX3
CB	750	C	82 -	2	2289	A3+		T	
CB	750	C / F / FII / K	85 -	2	2289	A3+		T	
CB	750	F	77 - 80	2	2814	A3+		2814	RX3
CB	750	F	81 - 82	2	2289	A3+		2289	RX3
CB	750	K	81 -	2	2289	A3+		2289	RX3
CB	750	KZ	82 -	1	2289	A3+		T	
CB	750	N / F Seven Fifty	92 -	2	2256	XBK5	A3+	2296	RX3
CB	750	Nighthawk	91 -	2	2256	XBK5	A3+	T	
CB	750	SC	82 - 83	2	2382	A3+		T	
CB	750	SS	77 - 79		NA			2814	RX3
CBR	750	Hurricane	87 -	2	2310	A3+		2289	RX3
CBX	750	F	84 -	2	2289	A3+		2289	RX3
CBX	750		84 -	2	2289	A3+		2289	RX3
NC	750	Integra	14 - 16	1	2313	A3+		1250	RX3
NC	750	Integra S	14 -	1	2313	A3+		1250	RX3
NC	750	S / S DCT	14 - 16	1	2313	A3+		1250	RX3
NC	750	X / X DCT	14 -	1	2313	A3+		2298	RX3
NC	750	XD / DCT	14 - 16	1	2313	A3+		1250	RX3
NR	750		92	2	2245	XBK5	A3+	2296	RX3
NV	750	CG Shadow	86 -	1	2289	A3+		T	
RVF	750	RR (RC45)	94 -	2	2245	XBK5	A3+	2385	RX3
VF	750	C	82 -	2	2289	A3+		T	
VF	750	C CD Magna	94 -	1	2313	A3+		T	

HONDA

					Best choice		Other choice	Best choice	
VF	750	C Magna	88 - 93	1	2289	A3+		T	
VF	750	F	83 -	2	2289	A3+		2289	RX3
VF	750	S	85 -	2	2289	A3+		T	
VF	750	Sport	82 - 83	2	2289	A3+		T	
VFR	750	F	86 - 87	2	2310	A3+		2289	RX3
VFR	750	F	88 - 89	2	2256	XBK5	A3+	2313	RX3
VFR	750	F	90 - 98	2	2256	XBK5	A3+	2313	RX3
VFR	750	R (RC 30)	88 - 93	2	2245	XBK5	A3+	2385	RX3
VP	750	CH Custom	87 -	1	2289	A3+		T	
VT	750	C / C2 Shadow	97 - 03	1	2313	A3+		T	
VT	750	C Shadow	86 - 96	1	2289	A3+		T	
VT	750	C4 Shadow	04 -	1	2313	A3+		T	
VT	750	DC BLACK WIDOW	01 -	1	2313	A3+		T	
VT	750	DC7 Shadow spirit	07 -	1	2313	A3+		T	
VT	750	S	11 -	1	2313	A3+		T	
XLV	750	R	83 - 85	1	2289	A3+		T	
XLV	750	R	86 -	1	2382	A3+		T	
XRV	750	Africa Twin	90 - 92	1	2252	A3+		2298	RX3
XRV	750	Africa Twin	93 - 03	2	2300	A3+		2298	RX3
PC	800	Pacific Coast	89 - 97	2	2256	A3+		T	
VFR	800	FI	98 - 01	2	2602	XBK5	A3+	2602	RX3
VFR	800	VTEC / VTEC ABS	02 - 05	2	2602	XBK5	A3+	2602	RX3
VFR	800	VTEC / VTEC ABS	06 - 13	2	1159	XBK5	A3+	2602	RX3
VFR	800	F (ABS)	14 -	2	1134	XBK5	A3+	1239	RX3
VFR	800	X Crossrunner	11 - 14	2	1159	XBK5	A3+	1217	RX3
VFR	800	X Crossrunner	15 -	2	1134	XBK5	A3+	NA	
VT	800	C	88 -	1	2289	A3+		T	
CB	900	C	82 -	2	2289	A3+		2289	RX3
CB	900	F	78 - 80	2	2814	A3+		2814	RX3
CB	900	F / F2	81 - 84	2	2382	A3+		2289	RX3
CB	900	Hornet (919)	02 -	2	2245	XBK5	A3+	2296	RX3
CBR	900	RR Fireblade	92 - 97	2	2245	XBK5	A3+	2296	RX3
CBR	900	RR Fireblade	98 - 99	2	2711	XBK5	A3+	2296	RX3
CBR	900	RR Fireblade (929)	00 - 01	2	2711	XBK5	A3+	2296	RX3
CBR	900	RR Fireblade (954)	02 - 03	2	2711	XBK5	A3+	2296	RX3
VFR	950	F / Carat	92 -	2	2256	XBK5	A3+	2313	RX3
CB	1000	C	83 -	2	2289	A3+		2289	RX3
CB	1000	F Big One	93 - 97	2	2245	XBK5	A3+	2296	RX3
CB	1000	R (Rad.cal)	08 -	2	1134	XBK5	A3+	1217	RX3
CB	1000	R (Rad.cal) ABS	08 -	2	1159	XBK5	A3+	1217	RX3
CB	1000	R Neo Sports Cafe	18 -	2	1245	XBK5	A3+	1217	RX3
CBF	1000		06 - 09	2	2256	XBK5	A3+	2296	RX3
CBF	1000	ABS	06 - 09	2	1159	XBK5	A3+	1159	RX3
CBF	1000		10 -	2	2256	XBK5	A3+	2296	RX3
CBF	1000	ABS	10 -	2	1159	XBK5	A3+	1159	RX3
CBR	1000	F	87 - 88	2	2310	A3+		2289	RX3
CBR	1000	F	89 - 92	2	2256	XBK5	A3+	2313	RX3
CBR	1000	F / FP (ABS-TCS-CBS)	93 - 99	2	2257	A3+		2257	RX3
CBR	1000	RR Fireblade (Rad.cal)	04 - 05	2	1134	XBK5	A3+	2296	RX3
CBR	1000	RR (Rad.cal)	06 - 07	2	1134	XBK5	A3+	1174	RX3
CBR	1000	RR Fireblade (Rad.cal)	08 - 13	2	1134	XBK5	A3+	1174	RX3
CBR	1000	RR Fireblade (Rad.cal) (C-ABS)	09 - 13	2	1134	XBK5	A3+	1174	RX3
CBR	1000	RR Fireblade (Rad.cal) (C-ABS)	14 - 16	2	1134	XBK5	A3+	1174	RX3
CBR	1000	RR Fireblade SP (Brembo)	14 - 16	2	1185	XBK5	A3+	1174	RX3
CBR	1000	RR Fireblade (Rad.cal) (C-ABS)	17 -	2	1252	XBK5	A3+	1174	RX3
CBR	1000	RR Fireblade SP / SP2	17 -	2	1185	XBK5	A3+	1174	RX3
CBX	1000		78 - 80	2	2814	A3+		2814	RX3
CBX	1000		81 - 82	2	2382	A3+		2289	RX3
CRF	1000	L Africa Twin Manual/DCT	16 -	2	1245	XBK5	A3+	2296	RX3
GL	1000	Goldwing	81 -	2	2814	A3+		2814	RX3
GL	1000	Grand Touring Goldwing	81 -	2	2814	A3+		2814	RX3
GL	1000	K3 Goldwing	78 - 79	2	2814	A3+		NA	
VF	1000	F / FII	84 - 86	2	2289	A3+		2289	RX3
VF	1000	FII Bol d'Or	85	2	2289	A3+		2289	RX3
VF	1000	R	84 - 85	2	2289	A3+		NA	
VF	1000	R	86 -	2	2289	A3+		2289	RX3
VFR	1000		89	2	2256	XBK5	A3+	2313	RX3
VT	1000	C	88 -	1	2289	A3+		T	
VTR	1000	F Firestorm / Super Hawk	97 - 06	2	2245	XBK5	A3+	2296	RX3
VTR	1000	SP-1	00 - 01	2	2711	XBK5	A3+	2296	RX3
VTR	1000	SP-2	02 - 07	2	2711	XBK5	A3+	2296	RX3
XL	1000	Varadero	99 - 06	2	2602	A3+		2602	RX3
XL	1000	Varadero	07 -	2	1159	A3+		2602	RX3
XL	1000	Varadero ABS	04 -	2	1159	A3+		2602	RX3
XL	1000	Varadero Travel	05 -	2	2602	A3+		2602	RX3
XL	1000	Varadero Travel ABS	05 -	2	1159	A3+		2602	RX3
CB	1100	A	13	2	1159	XBK5	A3+	2296	RX3
CB	1100	AE	14	2	2711	XBK5	A3+	2296	RX3
CB	1100	EX ABS	14 -	2	2711	XBK5	A3+	2296	RX3
CB	1100	RS	17 -	2	1245	XBK5	A3+	2296	RX3
CB	1100	F	83 -	2	2289	A3+		2289	RX3
CB	1100	R / RD	80 - 83	2	2289	A3+		2289	RX3
CB	1100	X-11	00 - 03	2	2602	XBK5	A3+	2602	RX3

1 - 2 = Nombre de jeux avant / Number of front sets / Anzahl Sets / Numero blister / Numero des juegos
L = Gauche / Left / Links / Sinistra / Izquierda
R = Droite / Right / Rechts / Destra / Derecha
NA = Non attribué / Not Available / Nicht verfügbar / Non disponible / No disponible

Best choice = Meilleur choix / Empfehlung / Mescola consigliata / Pastilla recomandata
Other choice = Autre choix / Weiterer Auswahlmöglichkeiten / Altra mescola / Otra posibilidad

HONDA

					Best choice		Other choice	Best choice	
CBR	1100	XX BlackBird	97 - 98	2	2602	XBK5	A3+	2602	RX3
CBR	1100	XX BlackBird	99 - 08	2	2602	XBK5	A3+	2602	RX3
GL	1100	A Goldwing	79 - 81	2	2814	A3+		2814	RX3
GL	1100	A1 / DLX / C / S Goldwing	81 -	2	2289	A3+		2289	RX3
ST	1100	Pan European	90 - 02	2	2256	XBK5	A3+	2313	RX3
ST	1100	Pan European ABS-TCS	92 - 95	2	2256	XBK5	A3+	2313	RX3
ST	1100	Pan European ABS-TCS	96 - 02	2	2602	A3+		2602	RX3
VF	1100	C	83 - 86	2	2382	A3+		2289	RX3
VF	1100	S	84 - 85	2	2382	A3+		2289	RX3
VT	1100	C Shadow	87 - 93	1	2289	A3+		T	
VT	1100	C Shadow	94 - 96	2	2256	XBK5	A3+	T	
VT	1100	C2 Shadow	95 -	2	2256	XBK5	A3+	2296	RX3
VT	1100	C3 Shadow	98 -	1	2256	XBK5	A3+	2296	RX3
VT	1100	T Shadow	98 -	1	2256	XBK5	A3+	2296	RX3
GL	1200	A Goldwing	84 -	2	2289	A3+		2289	RX3
GL	1200	DX Goldwing	86 -	2	2289	A3+		2289	RX3
GL	1200	Goldwing	84 -	2	2289	A3+		2289	RX3
VFR	1200	FAA/FAB/FAC/FAE (Manual)	10 - 14	2	1216	XBK5	A3+	1217	RX3
VFR	1200	FADA/FADB/FADC/FADE - DCT (Automatic)	10 - 14	2	1216	XBK5	A3+	1239	RX3
VFR	1200	XAC/XAD/XAE Crosstourer (Manual)	12 - 14	2	1159	XBK5	A3+	1239	RX3
VFR	1200	XDC/XDE - DCT Crosstourer (Automatic)	12 - 14	2	1159	XBK5	A3+	1239	RX3
VFR	1200	XDC - DCT Crosstourer Highlander (Automatic)	13 - 14	2	1159	XBK5	A3+	1239	RX3
CB	1300	X-4	97 - 00	2	2245	XBK5	A3+	2813	RX3
CB	1300	SF	98 - 00	2	2899	XBK5	A3+	2813	RX3
CB	1300	F1	01	2	2711	XBK5	A3+	2813	RX3
CB	1300	R	02 -	2	2711	XBK5	A3+	2813	RX3
CB	1300	Super Four	03 - 09	2	2711	XBK5	A3+	2296	RX3
CB	1300	Super Four ABS	05 - 09	2	2711	XBK5	A3+	2296	RX3
CTX	1300		14 - 17	2	1159	XBK5	A3+	2296	RX3
ST	1300	Pan European	02 - 07	2	2602	A3+		2602	RX3
ST	1300	Pan European ABS	08 -	2	1159	A3+		2602	RX3
VTX	1300	C / S	03 -	1	2256	XBK5	A3+	2296	RX3
GL	1500	Goldwing / SE	88 - 93	2	2248	A3+		2289	RX3
GL	1500	Goldwing Aspencade SE	94 -	2	2248	A3+		2289	RX3
GL	1500	F6C Custom / C Valkyrie	96 - 02	2	2256	XBK5	A3+	2313	RX3
GLX	1500		88 -	2	2248	A3+		2289	RX3
GL	1800	F6C Valkyrie	14 -	2	1159	XBK5	A3+	1231	RX3
GL	1800	Goldwing	01 -	2	2602	XBK5	A3+	1231	RX3
GL	1800	Goldwing F6B	13 -	2	1159	XBK5	A3+	1231	RX3
GL	1800	Goldwing 12 YM	12 -	2	1159	XBK5	A3+	1159	RX3
NRX	1800	Valkyrie Rune	04 -	2	2602	XBK5	A3+	1231	RX3
VTX	1800		01 -	2	2602	XBK5	A3+	1231	RX3

HOREX

	80	Rebell T	86 -	2	2332	A3+	S4	2332	RX3
	80	Sport L	86 -	2	2332	A3+	S4	2332	RX3
	125	Imperator	96 -	1	2332	A3+	S4	T	
	125	Regent	96 -	1	2332	A3+	S4	T	
	560	E	86 -	2	2332	A3+		2332	RX3
	600	Columbus	87 -	2	2332	A3+		2332	RX3

HRD

	125	Supermotard	00 - 02	1	1144	S4		2377	RX3
	125	Trail	00 - 02	1	1144	S4		2377	RX3

HUSABERG

FS	400	e / c SM	01 - 03	1	2251	XBK5	A3+	2353	RX3
FS	450	e / c SM	04 -	1	2251	XBK5	A3+	2353	RX3
FE	501	e SM	00	1	2352	XBK5	A3+	2353	RX3
FS	570	Supermoto	10 -	1	1129	XBK5		1108	RX3
FC	600	Supermotard	98 - 01	1	2352	XBK5	A3+	2353	RX3
FE	600	e SM	00	1	2352	XBK5	A3+	2353	RX3
FE	600	FE S - E - R	98 - 02	1	2352	XBK5	A3+	2353	RX3
FS	650	e / c SM	01 -	1	2251	XBK5	A3+	2353	RX3

HUSQVARNA

	50	Racing	98 -	1	2377	A3+	S4	T	
SM	125	S	00 - 05	1	2352	XBK5	A3+	2353	RX3
SM	125	S	06	1	2352	XBK5	A3+	2353	RX3
SM	125		98 - 99	1	2352	XBK5	A3+	2353	RX3
WRE	125	SM	99 -	1	2352	XBK5	A3+	2353	RX3
SM	400	R	02	1	2247	XBK5	A3+	2353	RX3
	401	Vitpilen	17 -	1	1233	XBK5	A3+	2353	RX3
	401	Svartpilen	17 -	1	1233	XBK5	A3+	2353	RX3
FS	450		15 -	1	1185	XBK5	A3+	1108	RX3
SM	450	R	03 - 04	1	2247	XBK5	A3+	2353	RX3
SM	450	R	05	1	1033	XBK5	A3+	2353	RX3
SM	450	R / RR	06 - 08	1	1033	XBK5	A3+	1108	RX3

HUSQVARNA

					Best choice		Other choice	Best choice	
SM	450	R	09 -	1	1033	XBK5	A3+	1108	RX3
SM	510	R	05	1	2247	XBK5	A3+	2353	RX3
SM	510	R	06	1	1033	XBK5	A3+	1108	RX3
SMR	511		11 -	1	1033	XBK5	A3+	1108	RX3
SM	570	Nox	01 - 03	1	2539	XBK5	A3+	2353	RX3
SM	570	R	01 - 05	1	2247	XBK5	A3+	2353	RX3
SM	570	R	06	1	2247	XBK5	A3+	1108	RX3
LT	610	E	99 -	1	2539	XBK5	A3+	2353	RX3
SM	610	SM / SMS	98 -	1	2539	XBK5	A3+	2353	RX3
SM	610		06	1	1033	XBK5	A3+	1108	RX3
SM	630		10 -	1	1033	XBK5	A3+	1108	RX3
SMR	630		04 - 05	1	2247	XBK5	A3+	2353	RX3
SMR	630		06 -	1	2247	XBK5	A3+	1108	RX3
STR	650	CRC	07 -	1	1033	XBK5	A3+	1108	RX3
TR	650	Strada	13 -	1	2396	XBK5	A3+	2353	RX3
TR	650	Terra	13 -	1	2396	XBK5	A3+	2353	RX3
	690	701 Vitpilen	18 -	1	2539	XBK5	A3+	2353	RX3
SM	701	Supermoto	15 -	1	1033	XBK5	A3+	2353	RX3
	900	Nuda	11 -	2	2539	XBK5	A3+	2353	RX3
	900	Nuda R	11 -	2	1185	XBK5	A3+	2353	RX3

HYOSUNG

GT	125	Comet	02 -	1	2621	A3+	S4	2621	RX3
GT	125	Comet R	06 -	2	2621	A3+	S4	2621	RX3
GV	125	Aquila	02 - 04	1	2621	A3+	S4	T	
GV	125	Aquila	05 -	1	2621	A3+	S4	T	
RT	125	Karion	02 -	1	2621	A3+	S4	T	
RX	125		00 -	1	2621	A3+	S4	T	
RX	125	SM	07 -	1	2621	A3+	S4	2621	RX3
	125	V2	99 -	1	2256	A3+	S4	NA	
XRX	125	SM	07 -	1	2621	A3+	S4	2621	RX3
XRX	125	Offroad	99 - 06	1	2621	A3+	S4	T	
GT	250	Comet	02	1	2304	A3+		2282	RX3
GT	250	Comet	03 -	1	2621	A3+		2621	RX3
GT	250	R	07 -	2	2621	A3+		2621	RX3
GV	250	Aquila	02 -	1	2621	A3+		T	
GA	300		98 -	1	2285	A3+		T	
XRX	400		05 -	1	2621	A3+		2314	RX3
RX	450	SM	08 -	1	1033	XBK5	A3+	2353	RX3
GT	600	Comet	02	1	2304	A3+		2282	RX3
GT	600	Comet	03	2	2621	A3+		2621	RX3
GT	650	Comet	04 -	2	2621	A3+		2621	RX3
GT	650	Custom Trendkiller	07 -	2	2621	A3+		2621	RX3
GT	650	Comet R / S	05 -	2	2621	A3+		2621	RX3
GT	650	TTC	07 -	2	2621	A3+		2621	RX3
GT	650	X	07 -	2	2621	A3+		2621	RX3
GV	650	Aquila	04 - 05	2	2621	A3+		1084	RX3
GV	650	Aquila	06 -	2	2621	A3+		2621	RX3
GV	700	C	10 -	1	2621	A3+		2621	RX3
GV	1000	Cruiser	06 -	2	2621	A3+		2621	RX3

INDIAN

	1000	Scout Sixty	17 -	1	2396	A3+		2353	RX3
	1133	Scout	15 -	1	NA	A3+		1147	RX3
	1133	Scout Bobber	17 -	1	NA	A3+		1147	RX3
	1800	Chief Classic (Brembo calipers)	11 - 13	2	2246	XBK5	A3+	2332	RX3
	1800	Chief Classic (Nissin calipers)	14 -	2	1083	XBK5	A3+	2313	RX3
	1800	Chief Deluxe (Brembo calipers)	09 - 13	2	2246	XBK5	A3+	2332	RX3
	1800	Chief Vintage (Brembo calipers)	09 - 13	2	2246	XBK5	A3+	2332	RX3
	1800	Chief Vintage (Nissin calipers)	14 -	2	1083	XBK5	A3+	2313	RX3
	1800	Chieftain (Nissin calipers)	14 -	2	1083	XBK5	A3+	2313	RX3
	1800	Chief Roadmaster (Brembo calipers)	09 - 11	2	2246	XBK5	A3+	2332	RX3
	1800	Chief Standard (Brembo calipers)	09 - 11	2	2246	XBK5	A3+	2332	RX3
	1800	Chief Roadmaster Classic / Elite	15 -	2	1083	XBK5	A3+	2313	RX3

ITALJET

	350	Road master	83 -	2	2249	A3+		T	
	650	Bazooka	06 -	2	2621	A3+		2621	RX3
	650	Griffon	06 -	2	2621	A3+		2621	RX3
	900	Griffon	00 -	1	2247	XBK5	A3+	2249	RX3

JIANSHE

JS	125		02 -	1	2546	A3+	S4	T	

JINCHENG

JC	125	2A/3A	97 -	1	2326	A3+	S4	T	
JC	150	T-D	06 -	1	2546	A3+		T	
JC	250		06 -	1	2288	A3+		T	

1 - 2 = Nombre de jeux avant / Number of front sets / Anzahl Sets / Numero blister / Numero des juegos
L = Gauche / Left / Links / Sinistra / Izquierda
R = Droite / Right / Rechts / Destra / Derecha
NA = Non attribué / Not Available / Nicht verfügbar / Non disponible / No disponible

Best choice = Meilleur choix / Empfehlung / Mescola consigliata / Pastilla recomandata
Other choice = Autre choix / Weiterer Auswahlmöglichkeiten / Altra mescola / Otra posibilidad

KAWASAKI

						Best choice		Other choice		Best choice
AR	50		81 - 82	1	2469	S4			T	
KSR	50	I	90 -	1	2469	S4			2469	S4
AR	80		81 -	1	2469	S4			T	
KSR	80	II	90 -	1	2469	S4			2469	S4
KH	100	EX	88 -	1	2306	A3+	S4		T	
KH	100	GH	83 -	1	2306	A3+	S4		T	
AR	125	A1/ A1A / A7 / LC	82 - 94	1	2306	A3+	S4		T	
BN	125	Eliminator A1 / A2	98 - 99	1	2408	A3+	S4		T	
BN	125	Eliminator A3	00 -	1	2326	A3+	S4		T	
KE	125		86 -	1	2306	A3+	S4		T	
KH	125		82 - 98	1	2306	A3+	S4		T	
KLX	125		10 -	1	2288	A3+	S4		2408	S4
KLX	125	D-Tracker	10 -	1	2288	A3+	S4		2408	S4
KMX	125		86	1	2469	S4			2306	RX3
KMX	125		87 - 02	1	2469	S4			2306	RX3
ZL	125	Eliminator	97 -	1	2469	S4			T	
KMX	200	A2 / A3 / A4	88 - 92	1	2469	S4			2306	RX3
Z	200	A6	83 -	1	2306	A3+			T	
	250	Estrella	92 -	1	2306	A3+			2306	RX3
BR	250		86 -	1	2285	A3+			T	
CS	250		86 -	1	2285	A3+			T	
EL	250	E3 / E4	93 - 94	1	2285	A3+			T	
EL	250	Eliminator	88 -	1	2285	A3+			T	
EL	250		91 - 96	1	2285	A3+			T	
EL	250		97 -	1	2285	A3+			T	
EX	250	R Ninja	86 - 87	1	2285	A3+			2285	RX3
EX	250	R F2-F17 Ninja	88 - 07	1	2304	A3+			2389	RX3
EX	250	R Ninja	08 - 12	1	2326	A3+			2326	RX3
EX	250	Ninja SL	15 -	1	2326	A3+			2326	RX3
GPX	250	R	88 -	2	2304	A3+			2389	RX3
GPZ	250		83 -	2	2285	A3+			T	
GPZ	250	Belt Drive	83 - 84	1	2306	A3+			T	
GPZ	250	R	86 -	1	2285	A3+			2285	RX3
KL	250	D2-D14 (KLR 250)	85 - 97	1	2306	A3+			T	
KL	250	D12 / D13	95 - 96	1	2306	A3+			T	
KLX	250	R	93 - 94	1	2300	A3+			2299	RX3
KLX	250	ES	94 - 97	1	2300	A3+			2299	RX3
KLX	250		98 - 03	1	2300	A3+			2314	RX3
KLX	250	S	06 - 07	1	2300	A3+			2314	RX3
KLX	250	S / SF	09 -	1	2288	A3+			2314	RX3
KR	250		- 85	2	2306	A3+			2285	RX3
KR1	250		88 - 89	2	2389	A3+			2389	RX3
KR1	250	S	90	2	2251	A3+			2389	RX3
LX	250	Eliminator / SE	90 -	1	2285	A3+			T	
Z	250		78 - 80		NA				2282	RX3
Z	250	J / A3	81 -		NA				2282	RX3
Z	250	Eliminator	88	1	2285	A3+			T	
Z	250	T Scorpion	89 -	1	2306	A3+			T	
Z	250	SL	15	1	2326	A3+			2326	RX3
Z	250	Ninja SL	15	1	2326	A3+			2326	RX3
ZR	250	Balius	91 - 95	1	2304	A3+			2306	RX3
ZXR	250	R	89	2	2389	A3+			2389	RX3
ZXR	250		90	2	2389	A3+			2389	RX3
ZZR	250		90 - 01	1	2304	A3+			2306	RX3
EL	252	Eliminator	97 - 00	1	2285	A3+			T	
EL	252	Eliminator	01 -	1	2288	A3+			T	
EX	300	Ninja R	13 -	1	2326	A3+			2326	RX3
KLE	300	Versys X / Urban / Adventure	17 -	1	2256	A3+			2326	RX3
Z	300		15 -	1	2326	A3+			2326	RX3
EX	305	B1	83	1	2285	A3+			T	
EX	305	GP	83 - 96	2	2285	A3+			T	
GPZ	305		81 - 96	2	2306	A3+			T	
	400	Eliminator	94 -	1	2304	A3+			2285	RX3
EN	400	Twin	85 -	1	2285	A3+			T	
EN	400	Vulcan	90 -	1	2285	A3+			T	
EX	400	Ninja R	11 -	1 L	2383	A3+			2381	RX3
EX	400	Ninja R	11 -	1 R	2384	A3+			T	
FX	400	R	86 - 88	2	2306	A3+			2285	RX3
GPX	400		87 -	2	2389	A3+			2304	RX3
GPZ	400		85 - 87	2	2306	A3+			2285	RX3
GPZ	400	R	89 -	2	2389	A3+			2304	RX3
GPZ	400	S	88 -	1	2304	A3+			T	
KLE	400		91 -	1	2304	A3+			2306	RX3
LX	400	Eliminator / SE	90	2	2306	A3+			T	
Z	400	Eliminator	88	1	2285	A3+			2285	RX3
Z	400	F	84 -	1	2306	A3+			T	
ZR	400	F / A1	83 - 84	1	2306	A3+			T	
ZR	400	Xanthus (D1)	92 - 95	2	2389	A3+			2306	RX3
ZX	400		85	1	2306	A3+			2285	RX3
ZX	400		86 -	2	2285	A3+			2285	RX3
ZX-4	400		88 - 89	2	2389	A3+			2389	RX3
ZX-4	400		90	2	2251	A3+			2282	RX3

KAWASAKI

						Best choice		Other choice		Best choice
ZXR	400		89 - 90	2	2251	XBK5	A3+		2282	RX3
ZXR	400	L1 / L2 / L3 / L4 / L5	91 - 02	2	2363	XBK5	A3+		2282	RX3
ZZR	400		90 - 94	2	2251	XBK5	A3+		2304	RX3
EN	450	A1 / A6	85 - 90	1	2285	A3+			T	
Z	450	LTD	84 -	1	2285	A3+			T	
EN	500	A1-A7 / B1-B2	90 - 96	1	2285	A3+			T	
EN	500	C1 - C2 Vulcan	96 - 98	1	2285	A3+			T	
EN	500	Vulcan Classic	90 -	1	2285	A3+			T	
EN	500		98 -	1	2285	A3+			T	
ER-5	500		97 - 00	1	2304	A3+			T	
ER-5	500		01 -	1	2383	A3+			T	
EX	500	A1-A3	87 - 89	1	2304	A3+			T	
EX	500	A4-A7	90 - 93	1	2304	A3+			T	
EX	500	D1-D3 Ninja	94 - 96	1	2304	A3+			2306	RX3
EX	500	E1-E3	94 - 96	1	2389	A3+			2306	RX3
GPX	500	R (Austria)	88	2	2304	A3+			2304	RX3
GPZ	500	S A1-A6	87 - 93	1	2304	A3+			T	
GPZ	500	S B1-B5	88 - 93	2	2306	A3+			T	
GPZ	500	S D1-D7	94 - 01	1	2304	A3+			2306	RX3
GPZ	500	S E1-E10	94 - 04	2	2389	A3+			2306	RX3
GPZ	500		93 - 95	1	2251	XBK5	A3+		T	
KL	500	Tengai (Austria)	89 - 91	1	2304	A3+			2306	RX3
KLE	500	A1-A4	91 -	1	2304	A3+				
KLR	500	(Austria)	87 - 88		NA				2306	RX3
ZL	500	(Austria)	85 -	1	2285	A3+			T	
ZR	500	A1	83 -	1	2306	A3+			T	
ZZR	500	(Austria)	90 - 92	2	2251	XBK5	A3+		2304	RX3
ZZR	500	(Austria)	93 -	2	2251	XBK5	A3+		2381	RX3
GPZ	550		84 - 87	2	2285	A3+			2285	RX3
GT	550		85 - 01	2	2285	A3+			T	
KX	550	A	83 -	1	2306	A3+			T	
ZX	550	A1 / A1L	84 -	2	2285	A3+			2285	RX3
Z	550	F	83 - 84	2	2306	A3+			T	
Z	550	F	85 -	2	2285	A3+			T	
Z	550	GT	83 -	2	2306	A3+			T	
ZR	550	A1 / GP	83 -	2	2306	A3+			T	
ZR	550	B1 / B3 / Zephyr	90 - 92	2	2304	A3+			2389	RX3
ZR	550	B4 / B5 / Zephyr	93 - 99	2	2304	A3+			2381	RX3
ZR	550	Zephyr Germany	93 -	2	2389	A3+			2381	RX3
EN	600	R Ninja	89 -	2	2251	XBK5	A3+		2282	RX3
GPX	600	R	88 - 93	2	2304	A3+			2304	RX3
GPX	600	R	94 -	2	2304	A3+			2304	RX3
GPZ	600	R	85 - 93	2	2285	A3+			2285	RX3
GPZ	600	R	94 -	2	2304	A3+			2304	RX3
KL	600	A1 / B1 / B2	84 - 86	1	2306	A3+			T	
KLR	600		84 - 86	1	2306	A3+			T	
KLR	600	E	85 - 94	1	2306	A3+			T	
Z	600	GP	83 -	2	2285	A3+			2285	RX3
ZL	600		85 -	1	2285	A3+			T	
ZL	600	B2 Eliminator	95 - 98	1	2304	A3+			T	
ZX	600	A1 / A2 / B1 Ninja	85 - 87	2	2285	A3+			2285	RX3
ZX	600	C1-C9 Ninja R	88 - 97	2	2304	A3+			2304	RX3
ZX6-R	600	D1-D4	90 - 93	2	2251	XBK5	A3+		2304	RX3
ZX6-R	600	E1-E5 Ninja	93 - 97	2	2251	XBK5	A3+		2381	RX3
ZX6-R	600	Ninja F1 / F2	95 - 97	2	2251	XBK5	A3+		2381	RX3
ZX6-R	600	Ninja (ZX600G)	98 - 02	2	2255	XBK5	A3+		2381	RX3
ZX6-R	600	Ninja (Rad.cal)	07 -	2	1177	XBK5	A3+		2381	RX3
ZX6-RR	600	Ninja (Rad.cal)	03 - 06	2	1110	XBK5	A3+		2381	RX3
ZX6-R	636	Ninja	02	2	2255	XBK5	A3+		2381	RX3
ZX6-R	636	Ninja (Rad.cal)	03 - 06	2	1110	XBK5	A3+		2381	RX3
ZX6-R	636	Ninja (Rad.cal)	13 -	2	2711	XBK5	A3+		1174	RX3
ZZR	600		90 - 92	2	2251	XBK5	A3+		2304	RX3
ZZR	600		93 - 05	2	2251	XBK5	A3+		2381	RX3
ZZR	600		06 - 07	2	2251	XBK5	A3+		2381	RX3
	650	Vulcan S	15 -	1	2602	A3+			2296	RX3
ER-6	650	N/F	06 -	1 L	2383	XBK5	A3+		2381	RX3
ER-6	650	N/F	06 -	1 R	2384	XBK5	A3+			
KL	650	B1 / B2 / B3 Tengai (KLR)	89 - 91	1	2304	A3+			2306	RX3
KL	650	C1 (KLR)	95 -	1	2383	A3+			2306	RX3
KLE	650	Versys	06 - 14	1 L	2383	XBK5	A3+		2381	RX3
KLE	650	Versys	06 - 14	1 R	2384	XBK5	A3+			
KLE	650	Versys / Versys LT	15 -	2	2256	XBK5	A3+		2298	RX3
KLR	650	A1-A11	87 - 97	1	NA				2306	RX3
KLR	650	C1	98 -	1	2383	A3+			2306	RX3
KLR	650		08 -	1	2288	A3+			2326	RX3
KLX	650	A1-A3 / C1-C4	93 - 96	1	2300	A3+			2299	RX3
KLX	650	R	93 - 95	1	2300	A3+			2299	RX3
W	650		99 -	1	2384	A3+			T	
Z	650		17 -	2	2256	XBK5	A3+		2296	RX3
	650	Ninja	17 -	2	2256	XBK5	A3+		2296	RX3
VN	700	A1 Vulcan	85	2	2285	A3+			T	
ZN	700	A1 / A1L	84 -	2	2285	A3+			2285	RX3
GPX	750	R	87 -	2	2304	A3+			2304	RX3

1 - 2 = Nombre de jeux avant / Number of front sets / Anzahl Sets / Numero blister / Numero des juegos
L = Gauche / Left / Links / Sinistra / Izquierda
R = Droite / Right / Rechts / Destra / Derecha
NA = Non attribué / Not Available / Nicht verfügbar / Non disponible / No disponible

Best choice = Meilleur choix / Empfehlung / Mescola consigliata / Pastilla recomandata
Other choice = Autre choix / Weiterer Auswahlmöglichkeiten / Altra mescola / Otra posibilidad

KAWASAKI

						Best choice		Other choice		Best choice
GPZ	750		83 - 87	2		2285	A3+		2285	RX3
GPZ	750	R	85 -	2		2285	A3+		2285	RX3
GPZ	750	T	83 -	2		2285	A3+		2285	RX3
GT	750		86 -	2		2285	A3+		2285	RX3
	750	Vulcan	93 -	1		2285	A3+		T	
VN	750	A1-A12 Vulcan	86 - 96	2		2285	A3+		T	
VZ	750	Twin	88	1		2285	A3+		T	
Z	750	E1 / E1L / Turbo	84 -	2		2285	A3+		2285	RX3
Z	750	Eliminator	88	2		2285	A3+		2285	RX3
Z	750	K1 / K2	83 - 84	2		2285	A3+		T	
Z	750	LTD Twin	83 -	1		2285	A3+		2285	RX3
Z	750	S	05 - 06	1	L	2383	XBK5	A3+	2381	RX3
Z	750	S	05 - 06	1	R	2384	XBK5	A3+		
Z	750		04 - 06	1	L	2383	XBK5	A3+	2381	RX3
Z	750		04 - 06	1	R	2384	XBK5	A3+		
Z	750	/ ABS	07 -	2		2256	XBK5	A3+	2296	RX3
Z	750	R	11 -	2		1177	XBK5	A3+	2298	RX3
ZR	750	Zephyr	91 - 95	2		2304	A3+		2389	RX3
ZR	750	Zephyr	96 - 98	1	L	2383	XBK5	A3+	2304	RX3
ZR	750	Zephyr	96 - 98	1	R	2384	XBK5	A3+		
ZR-7	750	S	01 - 03	1	L	2383	XBK5	A3+	2384	RX3
ZR-7	750	S	01 - 03	1	R	2384	XBK5	A3+		
ZR-7	750		99 - 03	1	L	2383	XBK5	A3+	2384	RX3
ZR-7	750		99 - 03	1	R	2384	XBK5	A3+		
ZX	750	A1 / E / GP	83 - 85	2		2285	A3+		2285	RX3
ZX7-R	750	Ninja	89 - 95	2		2251	XBK5	A3+	2282	RX3
ZX7-R	750	Ninja	96 - 02	2		2255	XBK5	A3+	2282	RX3
ZX7-RR	750	Ninja	96 - 02	2		2899	XBK5	A3+	2813	RX3
ZXR	750	R	89 - 92	2		2251	XBK5	A3+	2282	RX3
ZXR	750	R	93 - 95	2		2251	XBK5	A3+	2282	RX3
VN	800	A1 / A2 Vulcan / Classic	95 -	1		2285	A3+		T	
VN	800	Classic	98 -	1		2383	A3+		T	
VN	800	Drifter / Vulcan Drifter	99 - 02	1		2383	A3+		2384	RX3
W	800		11 -	1		2384	A3+		T	
Z	800		13 - 16	2		1083	XBK5	A3+	2298	RX3
Z	800	E	13 - 16	2		2256	XBK5	A3+	2298	RX3
Z	800	E (ABS)	13 - 16	2		1083	XBK5	A3+	2298	RX3
GPZ	900	R	84 - 89	2		2285	A3+		2285	RX3
GPZ	900	R	90 -	2		2251	XBK5	A3+	2304	RX3
VN	900	Custom	07 -	1		2383	A3+		2384	RX3
VN	900	Vulcan / Vulcan Classic	06 -	1		2383	A3+		2384	RX3
Z	900		17 -	2		1083	XBK5	A3+	2298	RX3
Z	900	RS / Cafe Racer	18 -	2		1133	XBK5	A3+	2298	RX3
ZL	900	Eliminator	85 -	2		2285	A3+		2285	RX3
ZX	900	A1 / A1L	83 - 84	2		2285	A3+		2285	RX3
ZX9-R	900	Ninja	94 - 95	2		2251	XBK5	A3+	2381	RX3
ZX9-R	900	Ninja	02 - 03	2		1083	XBK5	A3+	2381	RX3
ZX9-R	900	Ninja / C Ninja	96 - 01	2		2255	XBK5	A3+	2381	RX3
H2	1000	Ninja / Ninja R	15 -	2		1185	XBK5	A3+	2827	RX3
H2	1000	H2 SX SE / Tourer / Performance	18 -	2		1133	XBK5	A3+	2326	RX3
GPZ	1000	RX	86 -	2		2285	A3+		2285	RX3
GTR	1000		86 - 93	2		2285	A3+		2285	RX3
GTR	1000		94 - 06	2		2304	A3+		2285	RX3
KLV	1000		04 - 05	1	L	2383	XBK5	A3+	2296	RX3
KLV	1000		04 - 05	1	R	2384	XBK5	A3+		
KLZ	1000	Versys	12 -	2		2251	XBK5	A3+	2296	RX3
KLZ	1000	Versys LT / Tourer / Grand Tourer	15 -	2		2251	XBK5	A3+	2296	RX3
Z	1000	R Ninja	86 -	2		2285	A3+		2285	RX3
Z	1000		03 - 06	2		1083	XBK5	A3+	2381	RX3
Z	1000		07 - 09	2		1177	XBK5	A3+	2296	RX3
Z	1000	(Rad.cal)	10 - 13	2		1133	XBK5	A3+	2381	RX3
Z	1000	(Rad.cal)	14 - 16	2		1133	XBK5	A3+	2381	RX3
Z	1000	Performance MY	17 -	2		1133	XBK5	A3+	2381	RX3
Z	1000	R Edition (Brembo)	18 -	2		1185	XBK5	A3+	2381	RX3
Z	1000	SX (Rad.cal)	11 - 13	2		1133	XBK5	A3+	2381	RX3
Z	1000	SX (Rad.cal)	14 -	2		1133	XBK5	A3+	2381	RX3
Z	1000	SX Performance MY / Tourer	17 -	2		1133	XBK5	A3+	2381	RX3
ZL	1000		86 -	2		2285	A3+		2285	RX3
ZX10	1000	B2 / B3	88 - 90	2		2304	A3+		2304	RX3
ZX10-R	1000	Ninja (Rad.cal)	04 - 07	2		1110	XBK5	A3+	2381	RX3
ZX10-R	1000	Ninja (Rad.cal)	08 - 10	2		1133	XBK5	A3+	2381	RX3
ZX10-R	1000	Ninja (Rad.cal)	11 - 15	2		1133	XBK5	A3+	1174	RX3
ZX10-R	1000	Ninja (Rad.cal)	16 -	2		1185	XBK5	A3+	1174	RX3
GPZ	1100		83 - 94	2		2285	A3+		2285	RX3
GPZ	1100		95 - 96	1	L	2383	XBK5	A3+	2381	RX3
GPZ	1100		95 - 96	1	R	2384	XBK5	A3+		
GPZ	1100	ABS	97 -	1	L	2383	XBK5	A3+	2381	RX3
GPZ	1100	ABS	97 -	1	R	2384	XBK5	A3+		
Z	1100	GP	83 -	2		2285	A3+		2285	RX3
Z	1100	LTD	85 -	2		2285	A3+		2285	RX3
Z	1100	R LTD	84	2		2285	A3+		2285	RX3
Z	1100	ST	81 -			NA			2280	RX3
ZN	1100	B1 / B1L / LTD	84 -	2		2285	A3+		2285	RX3

KAWASAKI

						Best choice		Other choice		Best choice
ZR	1100	Zephyr	92 - 96	2		2251	XBK5	A3+	2304	RX3
ZR	1100	Zephyr	97 -	1	L	2383	XBK5	A3+	2304	RX3
ZR	1100	Zephyr	97 -	1	R	2384	XBK5	A3+		
ZRX	1100		96 - 00	2		2255	XBK5	A3+	2282	RX3
ZX	1100	A1 / GP	83 -	2		2285	A3+		2285	RX3
ZX	1100	D1-D4 ZX 11	93 - 97	2		2251	XBK5	A3+	2282	RX3
ZZR	1100		90 - 93	2		2251	XBK5	A3+	2304	RX3
ZZR	1100		94 - 01	2		2251	XBK5	A3+	2282	RX3
ZG	1200	B1-B10 Voyager	86 -	2		2285	A3+		2285	RX3
ZRX	1200	/ S / R	01 - 08	2		2255	XBK5	A3+	2282	RX3
ZX12-R	1200	Ninja	00 - 03	2		2255	XBK5	A3+	2282	RX3
ZX12-R	1200	Ninja (Rad.cal)	04 -	2		1110	XBK5	A3+	2282	RX3
ZZR	1200		02 -	2		2251	XBK5	A3+	2282	RX3
Z	1300	6	85	2		2285	A3+		2285	RX3
ZN	1300	A1 / A2 / A2L	83 - 84	2		2285	A3+		2285	RX3
ZN	1300	Voyager	85 -	2		2285	A3+		2285	RX3
GTR	1400	(Rad.cal)	07 - 09	2		1177	XBK5	A3+	2813	RX3
GTR	1400	(Rad.cal)	10 - 15	2		1253	XBK5	A3+	2813	RX3
ZZR	1400	(Rad.cal)	06 - 11	2		1177	XBK5	A3+	2813	RX3
ZZR	1400	(Rad.cal)	12 - 15	2		1253	XBK5	A3+	2813	RX3
ZZR	1400	Performance MY	16 -	2		1253	XBK5	A3+	2813	RX3
ZZR	1400	Performance Sport (Brembo)	16 -	2		1185	XBK5	A3+	2813	RX3
VN	1500	A1-A10 Vulcan SE	87 - 96	1		2285	A3+		2285	RX3
VN	1500	B1-B4 / C1 / C2 Vulcan	87 - 95	1		2285	A3+		2285	RX3
VN	1500	Classic	96 -	1		2383	A3+		2285	RX3
VN	1500	Classic Fi	00 -	1		2383	A3+		2384	RX3
VN	1500	Classic Tourer	98 -	1	L	2383	A3+		2285	RX3
VN	1500	Classic Tourer	98 -	1	R	2384	A3+			
VN	1500	Classic Tourer Fi	00 -	1	L	2383	A3+		2384	RX3
VN	1500	Classic Tourer Fi	00 -	1	R	2384	A3+			
VN	1500	Drifter	99 - 02	1		2383	A3+		2384	RX3
VN	1500	Mean Streak	02 - 03	2		2255	XBK5	A3+	2384	RX3
VN	1500	Sumo	88 -	1		2285	A3+		2285	RX3
VN	1500	Vulcan Nomad	98 -	1	L	2383	A3+		2285	RX3
VN	1500	Vulcan Nomad	98 -	1	R	2384	A3+			
VN	1500	Vulcan Nomad Fi	00 -	1	L	2383	A3+		2384	RX3
VN	1500	Vulcan Nomad Fi	00 -	1	R	2384	A3+			
VN	1600	Classic	03 -	1	L	2383	A3+		2384	RX3
VN	1600	Classic	03 -	1	R	2384	A3+		NA	
VN	1600	Mean Streak	04	2		2255	XBK5	A3+	2384	RX3
VN	1600	Mean Streak	05 -	2		1110	XBK5	A3+	2384	RX3
VN	1700	Classic	09 -	1	L	2383	A3+		2384	RX3
VN	1700	Classic	09 -	1	R	2384	A3+			
VN	1700	Classic Tourer	09	1	L	2383	A3+		2384	RX3
VN	1700	Classic Tourer	09	1	R	2384	A3+			
VN	1700	Classic Tourer (ABS)	10 - 14	2		2251	XBK5	A3+	2384	RX3
VN	1700	Voyager	09 -	2		2251	XBK5	A3+	2384	RX3
VN	2000	/ Vulcan	04 -	2		2251	XBK5	A3+	2384	RX3

KEEWAY

	125	Enduro	07 -	1		1146	S4		2249	RX3
	125	Speed	06 -	1		2306	A3+	S4	2306	RX3
	125	Superlight	06 -	1		2288	A3+	S4	T	
	125	X-Ray	07 -	1		1146	S4		2249	RX3
TX	125	SM	10 -			NA			1089	RX3
	150	Speed	06 -	1		2306	A3+		2306	RX3
	150	Superlight	06 -	1		2288	A3+		T	
	250	Landcruiser	06 -	1		2288	A3+		T	
	250	Supershadow	06 -	1		2546	A3+		T	

KRAM-IT

SM	250		00 -	1		2352	XBK5	A3+	2353	RX3
SMR	250		00 -			NA			2353	RX3

KREIDLER

	125	Enduro	07 -	1		2288	A3+	S4	NA	
	125	Florett D	07 -	1		2326	A3+	S4	NA	
	125	Florett RMC-F	07 -	1		2326	A3+	S4	NA	
	125	Supermoto	07 -	1		2288	A3+	S4	NA	
	200	Enduro	07 -	1		2288	A3+		NA	

KTM

RSV	50		86 -	1		2249	A3+	S4	T	
	80	PL/RSL/ L/ RS/ RL/ Chopper	80 -	1		2249	A3+	S4	2249	RX3
LC2	125		99 -	1		2352	A3+		2353	RX3
	125	Duke	11 -	1		1233	XBK5	A3+	2353	RX3
RC	125		14 -	1		2352	A3+		2353	RX3
	125	Euro Trail	96 -	1		1233	XBK5	A3+	2353	RX3
SX	125	SM	00 -	1		2352	XBK5	A3+	2353	RX3

1 - 2 = Nombre de jeux avant / Number of front sets / Anzahl Sets / Numero blister / Numero des juegos
L = Gauche / Left / Links / Sinistra / Izquierda
R = Droite / Right / Rechts / Destra / Derecha
NA = Non attribué / Not Available / Nicht verfügbar / Non disponible / No disponible

Best choice = Meilleur choix / Empfehlung / Mescola consigliata / Pastilla recomandata
Other choice = Autre choix / Weiterer Auswahlmöglichkeiten / Altra mescola / Otra posibilidad

KTM

					Best choice		Other choice	Best choice	
	125	Sting	97 -	1	2247	A3+	S4	2353	RX3
	200	Duke	12 -	1	1233	XBK5	A3+	2353	RX3
RC	200		14 -	1	1233	XBK5	A3+	2353	RX3
	390	Duke	13 -	1	1233	XBK5	A3+	2353	RX3
RC	390		14 -	1	1233	XBK5	A3+	2353	RX3
SX	450	SM / SM Factory Replica	04 -	1	2247	XBK5	A3+	1108	RX3
SX	450	SMR	04 - 06		NA			1108	RX3
SX	450	SMR	07 - 13	1	1129	XBK5		1108	RX3
SX	450	SMR	14 -	1	1185	XBK5	A3+	1108	RX3
SX	525	SMR	04 - 05	1	NA			1108	RX3
SX	560	SMR	06	1	1129	XBK5		1108	RX3
	620	Duke	94 - 98	1	2247	XBK5	A3+	2249	RX3
LC4	620	SC Supermoto	00	1	2352	XBK5	A3+	2353	RX3
LC4	625	SC Supermoto	02 - 04	1	2352	XBK5	A3+	2353	RX3
	625	SMC	05 - 06	1	2539	XBK5	A3+	2353	RX3
LC4	640	Adventure R	00	1	2352	XBK5	A3+	2353	RX3
LC4	640	Adventure	01 - 02	1	2352	XBK5	A3+	2353	RX3
LC4	640	Adventure	03 - 07	2	2352	XBK5	A3+	2353	RX3
LC4-E	640	Supermoto	99 - 06	1	2352	XBK5	A3+	2353	RX3
SMC	640	LC4	05	1	2539	XBK5	A3+	2353	RX3
	640	Duke II	99 - 07	1	2539	XBK5	A3+	2353	RX3
LC4	660	SM Factory Replica	02 -	1	2247	XBK5	A3+	2353	RX3
	660	SMC	03 - 04	1	2247	XBK5	A3+	2353	RX3
	660	SMC	05 - 06	1	2539	XBK5	A3+	2353	RX3
	690	SM	07 - 09	1	2539	XBK5	A3+	2353	RX3
	690	SMC	08 - 10	1	1033	XBK5	A3+	2353	RX3
	690	SMC R	12 - 14	1	1033	XBK5	A3+	2353	RX3
	690	SMR	07 - 09	2	1185	XBK5	A3+	2353	RX3
	690	Duke	08 - 11	2	1033	XBK5	A3+	2353	RX3
	690	Duke R	10 - 11	1	1033	XBK5	A3+	2353	RX3
	690	Duke ABS	12 -	1	2539	XBK5	A3+	2353	RX3
	690	Duke R	13 - 14	1	1185	XBK5	A3+	2353	RX3
	790	Duke	18 -	2	2352	XBK5	A3+	2353	RX3
LC-8	950	Adventure	02 -	2	2396	A3+		2353	RX3
	950	Duke	03 -	2	1033	XBK5	A3+	2353	RX3
	950	SM	05 -	2	1033	XBK5	A3+	2352	RX3
	950	SMR	07	2	1033	XBK5	A3+	2352	RX3
	950	Superenduro	06 -	1	2396	XBK5	A3+	2352	RX3
	990	Adventure / R / S	06 - 12	2	2396	XBK5	A3+	2352	RX3
	990	Supermoto R / SM-R	08 - 09	2	1033	XBK5	A3+	2352	RX3
	990	Supermoto R / SM-R	10 - 13	2	1185	XBK5	A3+	2352	RX3
	990	SMT	09 - 13	2	1033	XBK5	A3+	2352	RX3
	990	SMR	09 -	2	1033	XBK5	A3+	2352	RX3
	990	Super Duke	05 -	2	1033	XBK5	A3+	2353	RX3
	990	Super Duke R	09 -	2	1033	XBK5	A3+	2353	RX3
	1050	Adventure	15 - 16	2	2539	XBK5	A3+	2352	RX3
	1090	Adventure / Aventure R	17 -	2	2539	XBK5	A3+	2352	RX3
RC-8	1190		08 -	2	1185	XBK5	A3+	2827	RX3
RC8	1190	R	09 -	2	1185	XBK5	A3+	2827	RX3
	1190	Adventure	13 - 15	2	2539	XBK5	A3+	2352	RX3
	1190	Adventure R	13 - 15	2	2539	XBK5	A3+	2352	RX3
	1290	Super Adventure	15 - 16	2	2539	XBK5	A3+	2352	RX3
	1290	Super Adventure R / S	17 -	2	2539	XBK5	A3+	2352	RX3
	1290	Super Duke R	14 -	2	1185	XBK5	A3+	2827	RX3
	1290	Super Duke GT	16 -	2	1185	XBK5	A3+	2827	RX3

KYMCO

	125	Cruiser	99 -	1	2326	A3+	S4	T	
	125	Hipster	99 - 06	1	2326	A3+	S4	T	
	125	Pulsar	99 - 06	1	2326	A3+	S4	T	
	125	Quannon	08 -	1	2326	A3+	S4	2326	RX3
	125	Stryker	01 - 06	1	2288	A3+	S4	T	
	125	Zing	97 - 03	1	2326	A3+	S4	T	
	125	Zing II	04 - 09	1	2326	A3+	S4	T	
CK	125		04 -	1	2621	A3+	S4	T	
DX	150	Custom	93 -	1	2621	A3+		T	
	150	Hipster	99 - 06	1	2326	A3+		T	
	150	NSR	93 -	1	2621	A3+		T	
	150	Stryker	05 -	1	2288	A3+		T	
	150	Zing	97 - 09	1	2326	A3+		T	
	250	Venox	00 - 10	1	2256	A3+		T	

LAVERDA

	50	Gaucho	92	1	2249	A3+	S4	2249	RX3
OR	50	Atlas	86	1	2249	A3+	S4	2249	RX3
OR	50	Atlas	90 -	1	2249	A3+	S4	2249	RX3
CU	125	Ride	86 -	1	2249	A3+	S4	T	
LB	125	Uno	85 -	1	2249	A3+	S4	T	
	125	Custom	86 -	1	2249	A3+	S4	T	
GS	350	Lesmo	86 -	2	2249	A3+		2249	RX3
PF	350	Alpino		2	2249	A3+		2249	RX3

LAVERDA

					Best choice		Other choice	Best choice	
RS	350	Alpino		2	2249	A3+		2249	RX3
SFC	500			2	2332	A3+		2332	RX3
	500	Alpino / S	77 -	2	2249	A3+		2249	RX3
OR	600	Atlas	86 -	1	2801	A3+		2249	RX3
SFC	600		86 -	2	2332	A3+		2332	RX3
	650	Ghost	96 -	2	2247	XBK5	A3+	2249	RX3
	650	Ghost Legend	97 -	2	2247	XBK5	A3+	2249	RX3
	650	Sport	92 -	2	2247	XBK5	A3+	2249	RX3
	650	Strike	97 -	2	2247	XBK5	A3+	2249	RX3
	650	V Six	93 -	2	2332	A3+		2332	RX3
	668	Diamante	97 -	2	2247	XBK5	A3+	2249	RX3
	668	Ghost Strike	98 -	2	2247	XBK5	A3+	2249	RX3
	668		96 -	2	2247	XBK5	A3+	2249	RX3
	700	El Cid	90 -	2	2306	A3+		2306	RX3
	750	Cup	98 -	2	2247	XBK5	A3+	2249	RX3
	750	Diamante	97 -	2	2247	XBK5	A3+	2249	RX3
	750	Ghost Strike	97 -	2	2247	XBK5	A3+	2249	RX3
	750	S / S Formula / Strike	97 -	2	2247	XBK5	A3+	2249	RX3
	750	S SPORT	99 -	2	2247	XBK5	A3+	2249	RX3
SF2	750		74 - 78	2	2332	A3+		T	
SF3	750		74 - 78	2	2332	A3+		T	
SF3	750	RGS Corsa / Executive	77 -	2	2332	A3+		2332	RX3
TTS	800		99 -	2	2247	XBK5	A3+	2827	RX3
3C	1000	3CE / 3CL	74 -	2	2332	A3+		2332	RX3
RGS	1000	Jota	86 -	2	2332	A3+		2332	RX3
RGS	1000		83 -	2	2332	A3+		2332	RX3
SFC	1000		85 - 86	2	2332	A3+		2332	RX3
SFC	1000	(Rad.cal)	04 -	2	1033	XBK5	A3+	2827	RX3
TGA	1000	Executive	84 -	2	2332	A3+		2332	RX3
	1000	Jota	76 -	2	2332	A3+		2332	RX3
	1200	Mirage	78 -	2	2332	A3+		2332	RX3

MASH

	125	Café Racer	14 - 15	1	2288	A3+	S4	2408	RX3
	125	Scrambler	13 - 15	1	2621	A3+	S4	T	
	125	Seventy Five Vintage	13 - 15	1	2621	A3+	S4	2408	RX3
	125	Seventy Five	13 - 15	1	2288	A3+	S4	2408	RX3
	125	Seventy	12 - 15	1	2621	A3+	S4	T	
	250	Café Racer	14 - 15	1	2621	A3+		2408	RX3
	250	Two Fifty	14 - 15	1	2288	A3+		2408	RX3
	400	Five Hundred	15 -	1	2256	A3+		T	
	400	Scrambler	15 -	1	2256	A3+		T	
	400	Von Dutch	15 -	1	2256	A3+		T	

MAICO

	500	Supermotard	99 -	1	2352	XBK5	A3+	2353	RX3

MEGELLI

	125	M / R / S	08 -	1	2621	A3+	S4	NA	

MONDIAL

	1000	Evo (Rad.cal)	04 -	2	1033	XBK5	A3+	2827	RX3
	1000	Piega	03 -	2	1033	XBK5	A3+	2827	RX3
	1000	RZ Nuda	04 -	2	1033	XBK5	A3+	2827	RX3
	1000	Starfighter (Rad.cal)	04 -	2	1033	XBK5	A3+	2827	RX3

MORBIDELLI

	125	cc		2	2377	A3+	S4	2377	RX3

MOTO GUZZI

	125	BX	92	1	2249	A3+	S4	2249	RX3
	125	Custom	85	1	2249	A3+	S4	T	
	125	Enduro TT	85	1	2249	A3+	S4	T	
	240	/ 4	77 -	1	2249	A3+		T	
	250	TS	75 - 76	1	2249	A3+		T	
	350		77 -	2	2249	A3+		2249	RX3
	350	Falco	88	1	2249	A3+		2249	RX3
	350	Imola	78 -	2	2249	A3+		2249	RX3
	350	Nevada	92 -	2	2249	A3+		2249	RX3
NTX	350		88	1	2249	A3+		2249	RX3
NTX	350		90 -	1	2249	A3+		2332	RX3
V35	350	C		2	2332	A3+		2249	RX3
V35	350	Florida		2	2332	A3+		2249	RX3
V35	350	GT		1	2249	A3+		T	
V35	350	GT	90 -	1	2332	A3+		2249	RX3
V35	350	II / Imola / Imola II	77	2	2249	A3+		2249	RX3
V35	350	III	87 -	2	2332	A3+		2332	RX3

1 - 2 = Nombre de jeux avant / Number of front sets / Anzahl Sets / Numero blister / Numero des juegos
L = Gauche / Left / Links / Sinistra / Izquierda
R = Droite / Right / Rechts / Destra / Derecha
NA = Non attribué / Not Available / Nicht verfügbar / Non disponible / No disponible

Best choice = Meilleur choix / Empfehlung / Mescola consigliata / Pastilla recomandata
Other choice = Autre choix / Weiterer Auswahlmöglichkeiten / Altra mescola / Otra posibilidad

MOTO GUZZI

					Best choice		Other choice	Best choice	
V35	350	TT	86 -	2	2332	A3+		2332	RX3
	400		79 -	2	2249	A3+		2249	RX3
	500		77 -	2	2249	A3+		2249	RX3
V50	500	1/2/3/ Monza / Chopper	77	2	2249	A3+		2249	RX3
	500	Monza	78 -	2	2249	A3+		2249	RX3
	650		80 -	2	2249	A3+		2249	RX3
GT	650	Sessantacinque	89	2	2249	A3+		2249	RX3
NTX	650		90 -	1	2249	A3+		2332	RX3
V65	650	Florida	86 -	2	2332	A3+		2332	RX3
V65	650	GT	90 -	1	2332	A3+		NA	
V65	650	Lario	86 -	2	2249	A3+		2249	RX3
V65	650	NTX	87 -	1	2249	A3+		2249	RX3
V65	650	SP / Chopper		2	2249	A3+		2249	RX3
V65	650	TT	86 -	2	2249	A3+		2249	RX3
	750	Breva i.e	03 -	2	2539	A3+		2827	RX3
	750	Nevada	91 - 92	2	2249	A3+		2249	RX3
	750	Nevada Club	98 - 01	2	2249	A3+		2827	RX3
	750	Nevada / Nevada Club	03 - 04	1	2539	A3+		2827	RX3
	750	Nevada Classic i.e	05 -	1	2539	A3+		2827	RX3
	750	Nevada Touring	07 -	1	2539	A3+		2827	RX3
	750	Targa	89	2	2249	A3+		2249	RX3
NTX	750		89	1	2249	A3+		2249	RX3
NTX	750		90 -	1	2393	A3+		2332	RX3
S3	750		75 - 76	2	2332	A3+		T	
SP	750		91 -	1	2332	A3+		2332	RX3
V7	750	Ippogrifo	97 -	2	2247	XBK5	A3+	2249	RX3
V7	750	Clubman Racer	10 - 11	1	2539	A3+		2827	RX3
V7	750	Clubman Racer	12 - 14	1	2539	A3+		2794	S4
V7	750	III	17 -	1	2539	A3+		2794	S4
V75	750		86 -	2	2332	A3+		2332	RX3
V75	750	Duna	86 -	1	2332	A3+		2332	RX3
V75	750	Paris Dakar TT	86 -	1	2332	A3+		2332	RX3
	850	Le Mans	76 -	2	2332	A3+		2332	RX3
	850	Breva	07 -	2	2539	XBK5	A3+	2352	RX3
	850	Griso	07 -	2	2539	XBK5	A3+	2352	RX3
	850	Norge	07 -	2	2539	XBK5	A3+	2352	RX3
T	850		74 - 76	1	2332	A3+		T	
T3	850		75 -	2	2332	A3+		2332	RX3
T4	850		75 -	2	2332	A3+		2332	RX3
T5	850	N.T.	86 -	1	2332	A3+		2332	RX3
T5	850		75 -	2	2332	A3+		2332	RX3
V9	850	Bobber / Roamer	16 -	1	2539	A3+		2827	RX3
	940	Bellagio / Custom	07 -	2	2539	XBK5	A3+	2396	RX3
	1000	California II	85 - 88	2	2332	A3+		2332	RX3
	1000	California III Fuel Inj.	89	2	2332	A3+		2332	RX3
	1000	California III C	91 - 95	2	2332	A3+		2332	RX3
	1000	Daytona	91 -	2	2247	XBK5	A3+	2332	RX3
	1000	Le Mans IV	85 -	2	2332	A3+		2332	RX3
	1000	Le Mans V	90 - 95	2	2332	A3+		2332	RX3
	1000	Quota	92 - 97	2	2398	A3+		2249	RX3
GT	1000	V	91 -	2	2332	A3+		2332	RX3
RS	1000	Daytona	97 -	2	2247	XBK5	A3+	2249	RX3
S	1000		90	2	2332	A3+		2332	RX3
SP	1000	III	91 -	2	2332	A3+		2332	RX3
SP	1000	Le Mans	79 -	1	2332	A3+		2332	RX3
V	1000	Strada	93 - 94	2	2332	A3+		2332	RX3
V10	1000	Centauro	97 - 99	2	2247	XBK5	A3+	2249	RX3
	1100	Breva V1100	05	2	2539	XBK5	A3+	2352	RX3
	1100	Breva	05 - 06	2	2539	XBK5	A3+	2352	RX3
	1100	Breva (ABS)	07	2	2539	XBK5	A3+	2352	RX3
	1100	California	94 - 97	2	2332	A3+		2332	RX3
	1100	California (2 pin pads)	01 - 05	2	2539	A3+		2396	RX3
	1100	California Vintage	06 - 10	2	2539	A3+		2396	RX3
	1100	California EV (2 pin pads)	01 -	2	2539	A3+		2396	RX3
	1100	California Jackal (Single pin pad)	99 - 01	2	2247	XBK5	A3+	2396	RX3
	1100	California Special (Single pin pad)	99 - 00	2	2247	XBK5	A3+	2396	RX3
	1100	California Sport (2 pin pads)	01 - 02	2	2539	A3+		2396	RX3
	1100	Metal	02 - 03	2	2539	A3+		2396	RX3
	1100	Aluminium	03 - 05	2	2539	A3+		2396	RX3
	1100	Titanium Handlebar Fairing	03 - 05	2	2539	A3+		2396	RX3
	1100	Classic	06 - 09	2	2539	A3+		2396	RX3
	1100	Touring	06 - 07	2	2539	A3+		2396	RX3
	1100	California EV (Single pin pad)	97 - 00	2	2247	XBK5	A3+	2249	RX3
	1100	Griso	05 -	2	2539	XBK5	A3+	2352	RX3
	1100	Griso 8v	07 - 08	2	2539	XBK5	A3+	2352	RX3
	1100	Sport	94 - 99	2	2247	XBK5	A3+	2249	RX3
	1100	Sport Corsa	98 - 99	2	2247	XBK5	A3+	2249	RX3
ES	1100	Quota	99 - 01	2	2396	XBK5	A3+	2352	RX3
V11	1100	Lemans (All models)	01 - 04	2	2539	XBK5	A3+	2249	RX3
V11	1100	Scura / Sport Scura	02 -	2	2539	XBK5	A3+	2249	RX3
V11	1100	Sport	97 - 00	2	2247	XBK5	A3+	2249	RX3
V11	1100	Sport (All models)	01 -	2	2539	XBK5	A3+	2249	RX3
	1200	Breva	08 -	2	2539	XBK5	A3+	2352	RX3

MOTO GUZZI

					Best choice		Other choice	Best choice	
	1200	Corsa MGS-01	07 -	2	1033	XBK5	A3+	2827	RX3
	1200	Griso 8V	07 -	2	2539	XBK5	A3+	2352	RX3
	1200	Norge	06 -	2	2539	XBK5	A3+	2352	RX3
	1200	Norge GT 8V	10 -	2	2539	XBK5	A3+	2352	RX3
	1200	Sport ABS	06 - 07	2	2539	XBK5	A3+	2352	RX3
	1200	Sport 2V	06 - 09	2	2539	XBK5	A3+	2352	RX3
	1200	Sport 4V	08 - 09	2	2539	XBK5	A3+	2352	RX3
	1200	Sport 8V	12 -	2	2539	XBK5	A3+	2352	RX3
	1200	Stelvio	08 - 11	2	2539	XBK5	A3+	2352	RX3
	1200	Stelvio 8V (ABS)	11 - 13	2	2539	XBK5	A3+	2352	RX3
	1200	Stelvio NTX (ABS)	09 - 10	2	2539	XBK5	A3+	2352	RX3
	1200	Stelvio 8V NTX	11 - 13	2	2539	XBK5	A3+	2352	RX3
	1400	Audace	15 -	2	2539	XBK5	A3+	2396	RX3
	1400	California Custom	13 - 15	2	2539	XBK5	A3+	2396	RX3
	1400	California Touring	13 - 15	2	2539	XBK5	A3+	2396	RX3
	1400	California Touring SE	15 -	2	2539	XBK5	A3+	2396	RX3
	1400	Eldorado	15 -	2	2539	XBK5	A3+	2396	RX3
	1400	MGX-21	16 -	2	2539	XBK5	A3+	2396	RX3

MOTO MORINI

RLX	350	Excalibur	90 -	1	2400	A3+		2249	RX3
	350	Coguaro / New York	90 -	1	2400	A3+		2249	RX3
	350	Dart	88	1	2400	A3+		2249	RX3
	350	Indiana	88	1	2801	A3+		2249	RX3
	350	Kanguro	87	1	2794	A3+		2249	RX3
	400	Dart	89	1	2400	A3+		2249	RX3
	400	S		2	2249	A3+		2249	RX3
	501	Camel	88	1	2794	A3+		2249	RX3
	501	Coguaro	89	1	2400	A3+		2249	RX3
	501	Excalibur	89	1	2801	A3+		2249	RX3
RLX	501	Excalibur	90 -	1	2400	A3+		2249	RX3
	501	New York	89	1	2801	A3+		2249	RX3
	650	Indiana	88	1	2801	A3+		2249	RX3
	750	Indiana	88	1	2801	A3+		2249	RX3
	998	9 1/2	06 - 10	2	2539	XBK5	A3+	2827	RX3
	1187	MM3	07	2	2539	XBK5	A3+	2827	RX3
	1200	Corsaro	05 - 10	2	2539	XBK5	A3+	2827	RX3
	1200	Corsaro Avio	08 - 09	2	2539	XBK5	A3+	2827	RX3
	1200	Corsaro Veloce	07 - 09	2	2539	XBK5	A3+	2827	RX3
	1200	Granferro	10	2	1033	XBK5	A3+	2352	RX3
	1200	Granpasso	08 - 10	2	2396	XBK5	A3+	2352	RX3
	1200	GT	10	2	2396	XBK5	A3+	2352	RX3
	1200	Rebello Giubileo	12 - 13	2	1033	XBK5	A3+	2827	RX3
	1200	Scrambler	08 - 10	2	2539	XBK5	A3+	2827	RX3
	1200	Scrambler	10 - 13	2	2396	XBK5	A3+	2352	RX3
	1200	Sport	08 - 10	2	2539	XBK5	A3+	2827	RX3

MH (MOTORHISPANIA)

RYZ	125	Arena Enduro	05 -	1	2377	A3+	S4	2377	RX3

MV AGUSTA

	675	Brutale B3	12 -	2	2539	XBK5	A3+	2827	RX3
	675	F3	12 - 14	2	2539	XBK5	A3+	2827	RX3
	675	F3 Oro	12 - 14	2	1185	XBK5	A3+	2827	RX3
	675	F3	15 -	2	1185	XBK5	A3+	2827	RX3
	675	F3 RC	16 -	2	1185	XBK5	A3+	2827	RX3
	750	Brutale (All models) (Nissin)	03 - 08	2	2899	XBK5	A3+	1203	RX3
	750	F4 (All models) (Nissin)	99 - 03	2	2899	XBK5	A3+	1203	RX3
	800	Brutale	13 -	2	2539	XBK5	A3+	2827	RX3
	800	Brutale RR	15 -	2	2539	XBK5	A3+	2827	RX3
	800	Dragster / Dragster RR	15 -	2	2539	XBK5	A3+	2827	RX3
	800	Dragster RC	17 -	2	1185	XBK5	A3+	1203	RX3
	800	F3	14 -	2	1185	XBK5	A3+	1203	RX3
	800	F3 RC	16 -	2	1185	XBK5	A3+	1203	RX3
	800	Rivale	13 -	2	1232	XBK5	A3+	2827	RX3
	800	Stradale	15 -	2	1232	XBK5	A3+	2827	RX3
	800	Turismo Veloce	14 -	2	1232	XBK5	A3+	2827	RX3
	800	Turismo Veloce Lusso	14 -	2	1232	XBK5	A3+	2827	RX3
	910	Brutale S (Nissin)	05 - 08	2	2899	XBK5	A3+	1203	RX3
	910	Brutale R (Brembo)	05 - 08	2	1033	XBK5	A3+	1203	RX3
	989	Brutale R	08 - 09	2	2539	XBK5	A3+	1203	RX3
	920	Brutale	11 -	2	2539	XBK5	A3+	1203	RX3
	990	Brutale R	10 -	2	2539	XBK5	A3+	1203	RX3
	1000	F4 (All models) (Nissin)	04 - 06	2	2899	XBK5	A3+	1203	RX3
	1000	F4 Senna	06	2	1033	XBK5	A3+	1203	RX3
	1000	F4 R (Brembo)	06 - 07	2	1033	XBK5	A3+	1203	RX3
	1000	F4	10 -	2	1185	XBK5	A3+	1203	RX3
	1000	F4 R	12 -	2	1185	XBK5	A3+	1203	RX3
	1000	F4 RR 312 (Brembo)	07	2	1033	XBK5	A3+	1203	RX3
	1000	F4 RR Corsa Corta	12 -	2	1185	XBK5	A3+	1203	RX3

1 - 2 = Nombre de jeux avant / Number of front sets / Anzahl Sets / Numero blister / Numero des juegos
L = Gauche / Left / Links / Sinistra / Izquierda
R = Droite / Right / Rechts / Destra / Derecha
NA = Non attribué / Not Available / Nicht verfügbar / Non disponible / No disponible

Best choice = Meilleur choix / Empfehlung / Mescola consigliata / Pastilla recomandata
Other choice = Autre choix / Weiterer Auswahlmöglichkeiten / Altra mescola / Otra posibilidad

MV AGUSTA

				Best choice		Other choice	Best choice	
1078	Brutale RR	08 - 09	2	1185	XBK5	A3+	1203	RX3
1078	F4 RR 312 (Brembo)	08 -	2	1185	XBK5	A3+	1203	RX3
1090	Brutale RR	10 -	2	1185	XBK5	A3+	1203	RX3
1090	Brutale R	12 -	2	2539	XBK5	A3+	1203	RX3
1090	Brutale RR	12 -	2	1185	XBK5	A3+	1203	RX3
1090	Brutale RR Corsa	13 -	2	1185	XBK5	A3+	1203	RX3

MZ / MUZ

125	ETZ	82 - 92	1	2332	A3+	S4	T	
125	SM / SX (All models)	99 - 01		NA			2326	RX3
125	SM / SX (All models)	02 - 07	1	2288	A3+	S4	2326	RX3
125	Roadstar		1	2332	A3+	S4	T	
125	RT (All models)	02 - 07	1	2326	A3+	S4	2326	RX3
125	Saxon	93 - 97	1	2332	A3+	S4	T	
125	Sportstar	93 -	1	2332	A3+	S4	T	
150	ETZ	82 - 92	1	2332	A3+		T	
150	Saxon	95	1	2332	A3+		T	
250	ETZ	82 - 92	1	2332	A3+		T	
251	ETZ	89	1	2332	A3+		T	
251	Fun	95 - 96	1	2332	A3+		T	
251	Saxon Tour		1	2332	A3+		T	
300	ETZ	82 - 92	1	2332	A3+		T	
301	ETZ	90 -	1	2332	A3+		T	
301	Saxon Tour		1	2332	A3+		T	
301	Sportstar	96 -	1	2332	A3+		T	
500	Saxon (All models)	93 - 98	1	2332	A3+		T	
500	Silver Star Classic	93 -	1	2332	A3+		T	
500	Silverstar Voyager	96 -	1	2332	A3+		T	
500	Tour	96 -	1	2332	A3+		T	
660	Baghira (All models)	96 - 05		NA			2472	RX3
660	Black Panther	00 -		NA			2472	RX3
660	Mastiff 21"	96 - 05		NA			2472	RX3
660	Mastiff 17"	99 - 05	1	2247	XBK5	A3+	2249	RX3
660	Skorpion Sport / Cup	95 - 01	1	2247	XBK5	A3+	2249	RX3
660	Skorpion Replica	95 - 01	1	2247	XBK5	A3+	2249	RX3
660	Skorpion Tour / Traveller	95 - 02	1	2247	XBK5	A3+	2249	RX3
660	Street Moto	00 -		NA			2472	RX3
660	Super Moto	07 -		NA			2472	RX3
1000	S	01 - 02	2	2539	XBK5	A3+	NA	
1000	S	03 - 07	2	2246	XBK5	A3+	2813	RX3
1000	SF	05 - 07	2	2246	XBK5	A3+	2813	RX3
1000	SFX	07 -	2	2246	XBK5	A3+	2813	RX3
1000	SN	05 -	2	2246	XBK5	A3+	2813	RX3
1000	ST	07 -	2	2246	XBK5	A3+	2813	RX3

NORTON

588	Classic	89	2	2332	A3+		2332	RX3
588	Commander (Rotary)	90	2	2283	A3+		2283	RX3
588	F-1 (Rotary) P55 Model	90	2	2247	XBK5	A3+	2249	RX3
588	F-1 (Rotary) P55 B Model	90 - 91	2	2247	XBK5	A3+	2247	RX3
588	Interpol 2 (Rotary)	89	2	2332	A3+		2332	RX3
588	TT	92 -	2	2247	XBK5	A3+	NA	
961	Commando Café Racer	10 - 14	2	1033	XBK5	A3+	2827	RX3
961	Commando SE	10 - 11	2	1033	XBK5	A3+	2827	RX3
961	Commando SF	13 - 14	2	1033	XBK5	A3+	2827	RX3
961	Commando Sport	10 - 14	2	2539	XBK5	A3+	2827	RX3

RIEJU

125	Marathon Pro Supermotard	09 - 10		NA			2306	RX3
125	Marathon Pro (Radial.cal)	09 - 10		NA			2306	RX3
125	MRX	02 - 08	1	1144			2377	RX3
125	NKD	06 - 07		NA			2377	RX3
125	NKD	08 - 10	1	1148	A3+		2306	RX3
125	RS2 (AJP caliper)	06 - 10		NA			2377	RX3
125	RS2 (J.Juan caliper)	07 - 10	1	1148	A3+		2306	RX3
125	RS2 Pro (J.Juan caliper)	07 - 10	1	1148	A3+		2306	RX3
125	SMX	02 - 07	1	1144	S4		2377	RX3
125	SMX (Cast wheel)	07 - 08		NA			2377	RX3
125	Tango	06 - 10		NA			2377	RX3
125	Tango Motard (Cast wheel)	08 - 09		NA			2306	RX3
125	Tango pro	07 - 10		NA			2377	RX3
250	Tango (All models)	08 - 10		NA			2377	RX3

ROYAL ENFIELD

350	Bullet UCE	10 -	1	2352	A3+		NA	
500	Bullet	09 - 14	1	2288	A3+		NA	
500	Bullet Electra X	05 - 14	1	2288	A3+		NA	
500	Bullet Classic	09 - 14	1	2288	A3+		NA	
500	Bullet Classic Chrome	09 - 14	1	2288	A3+		NA	

ROYAL ENFIELD

				Best choice		Other choice	Best choice	
500	Bullet Battle Green	09 - 14	1	2288	A3+		NA	
500	Bullet Desert Storm	12 - 14	1	2288	A3+		NA	
500	Clubman	09 - 12	1	2288	A3+		NA	
500	Electra	09 - 14	1	2288	A3+		NA	
500	Fury	11 - 12	1	2288	A3+		NA	
500	Trials	09 - 12	1	2288	A3+		NA	
500	Woodsman	09 - 12	1	2288	A3+		NA	
535	Continental GT	14 -	1	2396	A3+	S4	2353	RX3

SACHS

	125	Roadster	00 - 03	1	1144	S4		T	
	125	X-Road	06	1	2247	A3+	S4	2472	RX3
	125	X-Road	07	1	2247	A3+	S4	2408	S4
	125	X-Road	08	1	2539	A3+	S4	2408	S4
XTC	125	Supersport	00 - 07	1	2247	A3+	S4	2472	RX3
XTC	125		08 -	1	2539	A3+	S4	2408	S4
ZX	125		98 -	1	2794	A3+	S4	2472	RX3
ZZ	125	Funbike	98 -	1	2794	A3+	S4	2472	RX3
	650	Roadster V1.6	01 - 04	1	2247	XBK5	A3+	2472	RX3
	650	Roadster V1.6	05 -	1	2247	XBK5	A3+	2284	RX3
	800	Roadster V2	00 -	2	2247	XBK5	A3+	2472	RX3
	805	B / S	03 - 04	2	2247	XBK5	A3+	2472	RX3

SANGLAS

	400	Y	79 - 80	2	2249	A3+		2249	RX3
	500	S2	79 - 80	2	2249	A3+		2249	RX3

SHERCO

	125	City Corp (All models)	03 - 07	1	1144	S4		2377	RX3
	125	City Corp (All models)	08 -	1	1146	S4		NA	
	125	SM 1.25i F Black Panther (4T)	10 -	1	1146	S4		NA	
	250	SM 2.5i Supermotard (4T)	08 -	1	2352	XBK5	A3+	1103	RX3
	450	SM 4.5i F Supermotard	04 - 10	1	2352	XBK5	A3+	1103	RX3
	450	SM 4.5i F Black Panther	08 - 10	1	1033	XBK5	A3+	1103	RX3
	510	SM 5.1i F Supermotard	07	1	2352	XBK5	A3+	1103	RX3
	510	SM 5.1i F Black Panther	08 - 10	1	1033	XBK5	A3+	1103	RX3
SR	80	2 CE		1	2249	A3+	S4	T	
	80	IFA	89	1	2249	A3+	S4	T	
S	83	CX		1	2249	A3+	S4	T	
S	83	OR		1	2249	A3+	S4	T	
	125	SM	01 -	1	1144	S4		2377	RX3
	125	SR	01 -	1	2794	A3+	S4	2472	RX3

SUZUKI

CP	50		85 -	1	2469	S4		T	
CR	50	DC	87 -	1	2469	S4		T	
DR	50	Big	89 -	1	2377	A3+	S4	T	
GSX-R	50		87 -	1	2306	A3+	S4	T	
OR	50	E	80 -	1	2306	A3+	S4	T	
RB	50	H	87	1	2306	A3+	S4	T	
RG	50	GAG	87 -	1	2306	A3+	S4	T	
RG	50	Gamma	90 -	1	2306	A3+	S4	T	
RMX	50		98 -	1	2377	A3+	S4	2377	RX3
TV	50	Wolf	89 -	1	2306	A3+	S4	T	
ZR	50	SAPX / SKX / SLK	81 - 87	1	2306	A3+	S4	T	
GT	80	L/C	81 -	1	2306	A3+	S4	T	
RG	80	Gamma	- 87	1	2306	A3+	S4	T	
TRS	118		82 - 83	1	2306	A3+	S4	T	
DF	125		98 - 00	1	2408	A3+	S4	T	
DR	125		86 - 02	1	2408	A3+	S4	T	
DR	125	SM	08 - 10	1	2300	A3+	S4	2314	RX3
EN	125	125-2 / 125-2A	05 -	1	2288	A3+	S4	T	
GN	125	EM-T	82 - 90	1	SOON	A3+	S4	T	
GN	125	EM-T	94 - 01	1	2306	A3+	S4	T	
GS	125	ESZ	82	1	2306	A3+	S4	T	
GS	125	ESD / ESF / ESK / ESM	83 - 94	1	2306	A3+	S4	T	
GS	125	ESR / ESX	95 - 00	1	2306	A3+	S4	T	
GT	125	T / ET	80 -	1	2306	A3+	S4	T	
GX	125	R	88 -	1	2408	A3+	S4	T	
GZ	125	Marauder	98 - 10	1	2387	A3+	S4	T	
RG	125	F Gamma	92 - 96	1	2251	XBK5	A3+	2388	RX3
RG	125	Wolf	92 - 94	1	2304	A3+	S4	2388	RX3
RH	125	X	87	1	2408	A3+	S4	T	
RV	125	Van Van	02 - 10	1	2384	A3+	S4	T	
SP	125	G / H / J	86 - 88	1	2408	A3+	S4	T	
SX	125	R	85 -	1	2408	A3+	S4	T	
TR	125		83 -	1	2306	A3+	S4	T	

1 - 2 = Nombre de jeux avant / Number of front sets / Anzahl Sets / Numero blister / Numero des juegos
L = Gauche / Left / Links / Sinistra / Izquierda
R = Droite / Right / Rechts / Destra / Derecha
NA = Non attribué / Not Available / Nicht verfügbar / Non disponible / No disponible

Best choice = Meilleur choix / Empfehlung / Mescola consigliata / Pastilla recomandata
Other choice = Autre choix / Weiterer Auswahlmöglichkeiten / Altra mescola / Otra posibilidad

SUZUKI

					Best choice	Other choice		Best choice	
TS	125	R	89 - 96	1	2288	A3+	S4	2299	RX3
TS	125	X	86 - 90	1	2408	A3+	S4	T	
TU	125	XT / Super Classic	99 -	1	2387	A3+	S4	T	
VL	125	Intruder LC	00 - 08	1	2387	A3+	S4	T	
X4	125	/ X3E	81 -	1	2306	A3+	S4	T	
DF	200	(SH42A)	98 - 00	1	2408	A3+		T	
DR	200	G / H / J	86 - 89	1	2408	A3+		T	
DR	200	SE / T	93 - 08	1	2408	A3+		T	
RG	200	Gamma	91 -	1	2251	XBK5	A3+	2388	RX3
SP	200	G / H / J	86 - 88	1	2408	A3+		T	
SX	200	R	85 -	1	2408	A3+		T	
TS	200	R	89 - 94	1	2288	A3+		2299	RX3
TV	200	Wolf	92 -	1	2304	A3+		2388	RX3
ET	240		86 -	1	2306	A3+		T	
RH	240	X	87 -	1	2408	A3+		T	
TS	240	X	85 -	1	2408	A3+		T	
DR	250	F	85	1	2408	A3+		T	
DR	250	SL/SM/SN/SEP/SER/SES (SJ44A)	90 - 95	1	2288	A3+		2299	RX3
DR	250	RS/RLS/RT/RLV/RLW (SJ45A) DOHC	90 - 95	1	2300	A3+		2299	RX3
DR	250	RXT/RXLT/RXV/Djebel XC (SJ45A)	96 - 98	1	2300	A3+		2299	RX3
DR	250	S	86 - 89	1	2408	A3+		T	
GF	250	S	88 -		NA			2282	RX3
GN	250		85 - 97	1	2694	A3+		T	
GNX	250	E	82 -	1	2694	A3+		T	
GS	250	TT / TX	80 - 82	1	2694	A3+		T	
GSF	250	Bandit	90 - 96	1	2304	A3+		2282	RX3
GSF	250	VS / S Bandit	97 -	1	2383	A3+		2282	RX3
GSX	250	F - Across	90 - 98	1	2304	A3+		2282	RX3
GSX	250	S Katana	91 -	1	2304	A3+		2282	RX3
GSX	250	S Cobra	89 -	1	2251	XBK5	A3+	2282	RX3
GSX	250		80 - 82	1	2694	A3+		T	
GSX	250	RCH / H (GJ72A)	87	2	2280	A3+		2282	RX3
GSX	250	FX	02 - 05	1	2384	A3+		2306	RX3
GSX-R	250		88 - 89	2	2280	A3+		2282	RX3
GSX-R	250	R	89 -	2	2251	XBK5	A3+	2282	RX3
GW	250	Inazuma	12 - 15	1	2256	XBK5	A3+	1250	RX3
GZ	250	/ Marauder	99 - 08	1	2387	A3+		T	
NZ	250	S	86 -	1	2306	A3+		T	
RG	250	Gamma WD	83 - 84	1	2282	A3+		2282	RX3
RG	250	Gamma WE	84		NA			2282	RX3
RG	250	Gamma	85 - 88		NA			2282	RX3
RGV	250	Gamma J	88	2	2251	XBK5	A3+	2282	RX3
RGV	250	Gamma K / L	89 - 90	2	2251	XBK5	A3+	2282	RX3
RGV	250	Gamma M / N / P / R / S	91 - 95	2	2251	XBK5	A3+	2389	RX3
RGV	250	Gamma T (RGVR 250 SP)	96 -	2	2363	XBK5	A3+	2389	RX3
RH	250		85 -	1	2408	A3+		T	
RV	200	Van Van	02 - 03	1	2384	A3+		T	
SP	250	F	85	1	2408	A3+		T	
SW1	250		92 -	1	2304	A3+		T	
TS	250	X	85 - 89	1	2408	A3+		T	
TU	250	XV / XW	92 - 97	1	2387	A3+		T	
TU	250	S/T/XS/XT/X-ST/XSV/XT-W (Volty)	97 - 00	1	2387	A3+		T	
TU	250	Grass tracker / Big boy	00 - 01	1	2383	A3+		T	
TV	250	J / K / AK / L / Wolf	88 - 90	1	2251	XBK5	A3+	2282	RX3
VL	250	Intruder	00 - 07	1	2387	A3+		T	
DR	350	SL/SM/SN/SP	90 - 93	1	2288	A3+		2299	RX3
DR	350	SER/SES	94 - 95	1	2288	A3+		2299	RX3
DR	350	SET/SEV	96 - 97	1	2288	A3+		2299	RX3
DR	350	SEW/SEX	98 - 99	1	2300	A3+		2299	RX3
SG	350	N Goose	92 -	1	2251	A3+		2282	RX3
DR-Z	400	SM	05 - 09	1	2300	XBK5	A3+	2314	RX3
GN	400	T / TZ / X / XX / TT	80 -	1	2694	A3+		T	
GSF	400	Bandit M/N/P	91 - 95	1	2304	A3+		2282	RX3
GSF	400	Bandit (GK75A) K/NK/Z/VM/ZM/P	89 - 94	2	2251	XBK5	A3+	2282	RX3
GSF	400	Bandit (GK7AA) S/VS/V-V/VZ-V	95 - 97	2	2251	XBK5	A3+	2282	RX3
GSR	400	K6	06 -	2	2251	XBK5	A3+	1163	RX3
GSX	400	S / L	80 -	1	2694	A3+		T	
GSX	400	ET / EX / EZ	81 - 83	1	2694	A3+		T	
GSX	400	F	81 -	1	2694	A3+		NA	
GSX	400	FW/FWS/FWS-2	83 -	2	2282	A3+		2282	RX3
GSX	400	FX / FZ	81 - 83	2	2306	A3+		NA	
GSX	400	X/XA/XS Impulse	86 -	2	2280	A3+		2282	RX3
GSX	400	FJ/FK/FAK/FL (GK74A)	88 - 90	2	2281	A3+		2282	RX3
GSX	400	SSN Katana (GK77A)	92 -	2	2251	XBK5	A3+	2282	RX3
GSX	400	R/S/T/ZR/ZS/ZT (GK79A) Impulse S	94 - 96	2	2256	A3+		2282	RX3
GSX	400	X Impulse (GK79A)	99 -	1	2539	A3+		2282	RX3
GSX	400	FSV/FSK1 (GK7B) Inazuma	00 -	1	2539	A3+		2282	RX3
GSX-R	400	R2 (GK71B)	80 -		NA			2282	RX3
GSX-R	400	R3 (GK71F)	83 -	2	2280	A3+		2282	RX3
GSX-R	400	H	87	2	2280	A3+		2282	RX3
GSX-R	400	J/RR/RAK (GK73A)	88 - 90	2	2251	XBK5	A3+	2282	RX3
GSX-R	400	RL/RM/RN/RP/RS (GK76A)	90 - 95	2	2246	XBK5	A3+	2282	RX3
LS	400	Savage	87 -	1	2387	A3+		T	

SUZUKI

						Best choice	Other choice		Best choice	
RF	400	RP/RR/VR/RT/RVT/RV-V (GK78A)	93 - 97	2		2256	XBK5	A3+	2282	RX3
RG	400	Type 1 & 2	85 - 87	2		2280	A3+		2282	RX3
VS	400	Intruder	94 -	1		2280	A3+		T	
GS	450	E / S / L	80 - 83	1		2694	A3+		T	
GS	450	E	90 -	1		2306	A3+		T	
GS	450	S	86	1		2306	A3+		T	
DR	500	S	89 -	1		2386	A3+		T	
GS	500	E	89 - 95	1		2304	A3+		2282	RX3
GS	500	E	96 - 03	1		2384	A3+		2282	RX3
GS	500	F	04 - 08	1		2384	A3+		2282	RX3
GSX	500	E	83 -	2		2282	A3+		2282	RX3
RG	500	CH / R Gamma	85 - 87	2		2280	A3+		2282	RX3
GS	550	ED / ESD / LD	83 -	1		2282	A3+		2282	RX3
GSX	550	ESD/ESE/EFE/EFF/ESH/EFG (GN71D)	83 - 87	2		2282	A3+		2282	RX3
DR	600	RG/RH/RJ (SN41A) Djebel	86 - 88	1		2386	A3+		T	
DR	600	RK (SN41A) Djebel	89	1		2386	A3+		2388	RX3
DR	600	SF/SG/SH/SJ/SK (SN41A)	85 - 89	1		2386	A3+		T	
GSF	600	S / N Bandit	95 - 99	2		2256	XBK5	A3+	2282	RX3
GSF	600	S / N Bandit	00 - 04	1	L	2383	XBK5	A3+	2282	RX3
GSF	600	S / N Bandit	00 - 04	1	R	2384	XBK5	A3+		
GSR	600	K6 / K7 / K8	06 -	2		2251	XBK5	A3+	1163	RX3
GSX-F	600	FJ (GN72A)	88	2		2281	A3+		2282	RX3
GSX-F	600	FK/FL/FM/FN/FP/FR/FS/FT/(GN72A)	89 - 97	2		2281	A3+		2282	RX3
GSX-F	600	FW/FX/FY/FK1 to FK6	98 - 06	1	L	2383	XBK5	A3+	2282	RX3
GSX-F	600	FW/FX/FY/FK1 to FK6	98 - 06	1	R	2384	XBK5	A3+		
GSX-R	600		93 - 96	2		2246	XBK5	A3+	2282	RX3
GSX-R	600	V/W/X/Y/K1/K2/K3	97 - 03	2		2251	XBK5	A3+	2282	RX3
GSX-R	600	K4 / K5 (Rad.cal)	04 - 05	2		1133	XBK5	A3+	2813	RX3
GSX-R	600	K6 / K7 (Rad.cal)	06 - 07	2		1133	XBK5	A3+	1163	RX3
GSX-R	600	K8 / K9 / L0 (Rad.cal)	08 - 10	2		1133	XBK5	A3+	1163	RX3
GSX-R	600	Brembo (Rad.cal)	11 - 17	2		1185	XBK5	A3+	1174	RX3
RF	600	R (GN67A)	93 - 97	2		2256	XBK5	A3+	2282	RX3
SP	600	F	85 - 87	1		2386	A3+		T	
VS	600	GL Intruder	95 - 97	1		2280	A3+		T	
DL	650	V-Strom	04 - 06	1	L	2383	A3+		2296	RX3
DL	650	V-Strom	04 - 06	1	R	2384	A3+			
DL	650	V-Strom / ABS	07 - 14	1	L	2383	A3+		2296	RX3
DL	650	V-Strom / ABS	07 - 14	1	R	2384	A3+			
DL	650	V-Strom XT / ABS	15 -	1	L	2383	A3+		2296	RX3
DL	650	V-Strom XT / ABS	15 -	1	R	2384	A3+			
DR	650	R (SP41A) / RS (SP42A)	90 - 91	1		2308	A3+		2388	RX3
DR	650	RSE (SP43A)	91 - 95	1		2308	A3+		2388	RX3
DR	650	R (SP44A/B)	92 - 93	1		2308	A3+		2388	RX3
DR	650	SE (SP46A/B)	96 - 97	1		2300	A3+		2299	RX3
GSF	650	Bandit / Bandit S	05 - 06	1	L	2383	XBK5	A3+	2813	RX3
GSF	650	Bandit / Bandit S	05 - 06	1	R	2384	XBK5	A3+		
GSF	650	Bandit ABS / Bandit S ABS	05 - 06	1	L	2383	XBK5	A3+	2813	RX3
GSF	650	Bandit ABS / Bandit S ABS	05 - 06	1	R	2384	XBK5	A3+		
GSF	650	Bandit / Bandit S	07 -	2		2251	XBK5	A3+	2296	RX3
GSF	650	Bandit ABS / Bandit S ABS	07 -	2		2251	XBK5	A3+	2296	RX3
GSX	650	F	08 -	2		2251	XBK5	A3+	2296	RX3
GSX	650	GT	86			NA			2280	RX3
LS	650	P Savage	86 - 04	1		2387	A3+		T	
S40	650	Boulevard	05 -	1		2387	A3+		T	
SFV	650	Gladius	09 - 15	1	L	2383	XBK5	A3+	1250	RX3
SFV	650	Gladius	09 -	1	R	2384	XBK5	A3+		
SV	650	N / S	99 - 02	1	L	2383	XBK5	A3+	2282	RX3
SV	650	N / S	99 - 02	1	R	2384	XBK5	A3+		
SV	650	N / S	03 - 16	1	L	2383	XBK5	A3+	2296	RX3
SV	650	N / S	03 - 16	1	R	2384	XBK5	A3+		
SV	650	(ABS)	16 -	1	L	2383	XBK5	A3+	1250	RX3
SV	650	(ABS)	16 -	1	R	2384	XBK5	A3+		
SV	650	N ABS / S ABS	07 - 15	1	L	2383	XBK5	A3+	2296	RX3
SV	650	N ABS / S ABS	07 - 15	1	R	2384	XBK5	A3+		
XF	650	Freewind	97 - 02	1		2384	A3+		2298	RX3
GS	700	EF / ESF	85	2		2694	A3+		NA	
VS	700	GLFG Intruder	86 - 87	1		2280	A3+		T	
DR	750	SJ Big	88	1		2308	A3+		T	
DR	750	SK Big	89 - 90	1		2308	A3+		2388	RX3
GSR	750		11 -	1	L	2383	XBK5	A3+	2296	RX3
GSR	750		11 -	1	R	2384	XBK5	A3+		
GSX	750	ET / EX	80 - 81	2		2694	A3+		NA	
GSX	750	ESD/EFE/ESG/ESE/ESH/EFF	82 - 86	2		2694	A3+		NA	
GSX	750	SE Katana	85	2		2282	A3+		2280	RX3
GSX	750	W/X/Y/K1 Inazuma	97 - 03	1	L	2383	XBK5	A3+	2282	RX3
GSX	750	W/X/Y/K1 Inazuma	97 - 03	1	R	2384	XBK5	A3+		
GSX-F	750	FK/FL/FM/FN/FP/FR/FS/FT/(GR78A)	89 - 97	2		2281	A3+		2282	RX3
GSX-F	750	FW/FX/FY/FK1 to FK6	98 - 06	1	L	2383	XBK5	A3+	2282	RX3
GSX-F	750	FW/FX/FY/FK1 to FK6	98 - 06	1	R	2384	XBK5	A3+		
GSX-R	750	F / G / H	85 - 87	2		2280	A3+		2282	RX3
GSX-R	750	RG	86	2		2246	XBK5	A3+	2282	RX3
GSX-R	750	J / K / L / M / WN / WP	88 - 93	2		2246	XBK5	A3+	2282	RX3
GSX-R	750	WR / WS	94 - 95	2		2255	XBK5	A3+	2282	RX3

1 - 2 = Nombre de jeux avant / Number of front sets / Anzahl Sets / Numero blister / Numero des juegos
L = Gauche / Left / Links / Sinistra / Izquierda
R = Droite / Right / Rechts / Destra / Derecha
NA = Non attribué / Not Available / Nicht verfügbar / Non disponible / No disponible

Best choice = Meilleur choix / Empfehlung / Mescola consigliata / Pastilla recomandata
Other choice = Autre choix / Weiterer Auswahlmöglichkeiten / Altra mescola / Otra posibilidad

SUZUKI

						Best choice	Other choice		Best choice
GSX-R	750	T / V / W / X	96 - 99	2		2255 XBK5	A3+	2282	RX3
GSX-R	750	Y / K1 / K2 / K3	00 - 03	2		2251 XBK5	A3+	2282	RX3
GSX-R	750	K4 / K5 (Rad.cal)	04 - 05	2		1133 XBK5	A3+	2813	RX3
GSX-R	750	K6 / K7 (Rad.cal)	06 - 07	2		1133 XBK5	A3+	1163	RX3
GSX-R	750	K8 / K9 / L0 (Rad.cal)	08 - 10	2		1133 XBK5	A3+	1163	RX3
GSX-R	750	Brembo (Rad.cal)	11 - 17	2		1185 XBK5	A3+	1174	RX3
GSX-S	750		17 -	2		1083 XBK5	A3+	2296	RX3
VS	750	GLF/GLFG/GLPP Intruder (VR51A)	85 - 91	2		2280 A3+		T	
C	800	Intruder (VL 800 K5-K9/L0) (C800)	05 -	1		2384 A3+		T	
C90	800	Boulevard (VL 800 K5-K9/L0) (C800)	05 -	1		2384 A3+		T	
DR	800	SL (SR43A) Big	90	1		2308 A3+		2388	RX3
DR	800	SM (SR43A) Big	91 - 95	1		2304 A3+		2326	RX3
DR	800	ST Big	96 -	1		2383 A3+		2326	RX3
DR-Z	800	Paris Dakar	88 - 90	1		2308 A3+		2328	S4
M	800	Intruder (VZ 800 K5-K9/L0) (M800)	05 -	1		2384 A3+		T	
M	800	Intruder Z (VZ 800 K9Z) (M800)	09 -	1		2384 A3+		T	
M50	800	Boulevard	05 -	1		2384 A3+		T	
S50	800	Boulevard	05 -	1		2384 A3+		T	
VL	800	Intruder Volusia K1/K2/K3/K4	01 - 04	1		2384 A3+		T	
VS	800	Intruder GLN-GLX (VS52A)	91 - 99	1		2280 A3+		T	
VX	800	L / M / N / P / R	90 - 96	1		2304 A3+		2281	RX3
VZ	800	Marauder	97 - 04	1		2384 A3+		T	
GS	850	GZ / GE / GG	82 - 85	2		2694 A3+		NA	
RF	900	RR / RS / RS2	94 - 95	2		2961 A3+		2390	RX3
RF	900	RT / RV / RW	96 - 99	2		2961 A3+		2282	RX3
DL	1000	V-Strom K2-K9	02 - 09	1	L	2383 A3+		2296	RX3
DL	1000	V-Strom K2-K9	02 - 09	1	R	2384 A3+			
DL	1000	V-Strom ABS	14 -	2		1133 XBK5	A3+	1163	RX3
GS	1000	GT / GX / GLT / GLX	80 - 81	2		2694 A3+		NA	
GSX-R	1000	K1 / K2	01 - 02	2		2255 XBK5	A3+	2813	RX3
GSX-R	1000	K3 (Rad.cal)	03	2		1110 XBK5	A3+	2813	RX3
GSX-R	1000	K4 (Rad.cal)	04	2		1133 XBK5	A3+	2813	RX3
GSX-R	1000	K5 / K6 (Rad.cal)	05 - 06	2		1133 XBK5	A3+	2813	RX3
GSX-R	1000	K7 / K8 (Rad.cal)	07 - 08	2		1133 XBK5	A3+	1163	RX3
GSX-R	1000	K9 / L0 (Rad.cal)	09 -	2		1133 XBK5	A3+	1174	RX3
GSX-R	1000	L2 (Brembo Rad.cal)	12 - 17	2		1185 XBK5	A3+	1174	RX3
GSX-R	1000	R / R Origins	18 -	2		1185 XBK5	A3+	1174	RX3
GSX-S	1000	/ F	15 -	2		1185 XBK5	A3+	1174	RX3
SV	1000	S / N K3-K7	03 - 07	2		2251 XBK5	A3+	2296	RX3
TL	1000	S	97 - 01	2		2251 XBK5	A3+	2282	RX3
TL	1000	R	98 - 02	2		2255 XBK5	A3+	2282	RX3
GS	1100	GD / GZ / GLD / GLZ / GKZ	82 - 83	1		2694 A3+		NA	
GSX	1100	EFE / EFF / ESE	84 - 86	2		2280 A3+		2280	RX3
GSX	1100	FJ/FK/FL/FM/FN/FP/FR (GV72A)	88 - 95	2		2281 A3+		2280	RX3
GSX	1100	GM / GN / GP	91 - 93	2		2304 A3+		2281	RX3
GSX	1100	G	94 - 95	2		2304 A3+		2389	RX3
GSX	1100	G	96 -	1	L	2383 A3+		2282	RX3
GSX	1100	G	96 -	1	R	2384 A3+			
GSX	1100	Katana	93 -	2		2246 XBK5	A3+	2282	RX3
GSX-R	1100	G / H / J (GV74B)	86 - 88	2		2280 A3+		2282	RX3
GSX-R	1100	K / L / M / N (GV73B)	89 - 92	2		2246 XBK5	A3+	2282	RX3
GSX-R	1100	WP / WR / WS / WT (GV75A)	93 - 97	2		2255 XBK5	A3+	2282	RX3
GS	1150	EG	86 -	2		2280 A3+		2280	RX3
GS	1150	ES	84 -	2		2280 A3+		2280	RX3
GS	1200	SS (GV78A)	01	2		2255 XBK5	A3+	2813	RX3
GSF	1200	S / N Bandit	95 - 00	2		2246 XBK5	A3+	2282	RX3
GSF	1200	S / N Bandit ABS	97 -	2		2246 XBK5	A3+	2282	RX3
GSF	1200	S / N Bandit K1-K5	01 - 05	2		2255 XBK5	A3+	2282	RX3
GSF	1200	S / N Bandit K6	06	2		2251 XBK5	A3+	2296	RX3
GSF	1200	S / N Bandit ABS K6	06	2		2251 XBK5	A3+	2296	RX3
GSX	1200		98 - 01	2		2539 XBK5	A3+	2282	RX3
GV	1200	GLG Madura	85 - 86	2		2694 A3+		NA	
GSF	1250	S / N Bandit (K7/K8/K9/L0)	07 - 10	2		2251 XBK5	A3+	2296	RX3
GSF	1250	S / N Bandit ABS (K7/K8/K9/L0)	07 - 10	2		2251 XBK5	A3+	2296	RX3
GSX	1250	FA Traveller	10 -	2		2251 XBK5	A3+	2296	RX3
GSX	1300	B-King	07	2		1177 XBK5	A3+	2296	RX3
GSX-R	1300	Hayabusa	99 - 07	2		2255 XBK5	A3+	2282	RX3
GSX-R	1300	Hayabusa	08 - 12	2		1133 XBK5	A3+	1163	RX3
GSX-R	1300	Hayabusa	13 -	2		1185 XBK5	A3+	1163	RX3
GSX	1340	B-King	08 - 12	2		1083 XBK5	A3+	1163	RX3
GSX	1400		01 - 07	2		2255 XBK5	A3+	2813	RX3
GV	1400	Cavalcade (Up to F/No 103764)	86	2		2280 A3+		2280	RX3
GV	1400	Cavalcade (From F/No 103765)	86 - 88	2		2281 A3+		NA	
VS	1400	GL Intruder (VX51L)	87 - 04	2		2280 A3+		2280	RX3
VL	1500	Intruder Legendary Classic	98 - 01	1		2280 A3+		2280	RX3
VL	1500	Intruder Legendary Classic	02 - 03	1	L	2383 A3+		1145	RX3
VL	1500	Intruder Legendary Classic	02 - 03	1	R	2384 A3+			
C	1500	Intruder	05 - 09	1	L	2383 A3+		1145	RX3
C	1500	Intruder	05 - 09	1	R	2384 A3+			
C	1500	T Intruder	13 -	1		2256 A3+		2384	RX3
C90	1500	Boulevard	05 - 09	1	L	2383 A3+		1145	RX3
C90	1500	Boulevard	05 - 09	1	R	2384 A3+			
M	1500	Intruder	09 -	1	L	2383 A3+		2384	RX3

SUZUKI

						Best choice	Other choice		Best choice
M	1500	Intruder	09 -	1	R	2384 A3+			
M	1600	Intruder	05 -	2		1110 XBK5	A3+	2384	RX3
M95	1600	Boulevard	05 -	2		1110 XBK5	A3+	2384	RX3
VZ	1600	Marauder	04	2		2255 XBK5	A3+	2384	RX3
C	1800	R Intruder / RT Intruder	08 -	2		1159 XBK5	A3+	2384	RX3
M	1800	R Intruder	06 - 09	2		1133 XBK5	A3+	2384	RX3
M	1800	R Intruder Boss	14 -	2		1133 XBK5	A3+	2384	RX3
M	1800	R2 Intruder	08 - 09	2		1133 XBK5	A3+	2384	RX3
M	1800	RZ	07 - 10	2		1133 XBK5	A3+	2384	RX3

SYM

	125	Cevalo B9A (4T)	10	1		2313 A3+	S4	T	
	125	Wolf Legend	04 - 05	1		2621 A3+	S4	T	
XS	125	K	07 - 09	1		2326 A3+	S4	T	

THUMPSTAR

	90	Junior	04 - 06	1		2696 S4	A3+	2696	S4
	110	Supa	04 - 06	1		2696 S4	A3+	2696	S4
	125	Expert	06	1		2696 S4	A3+	2696	S4
	125	Pro	05 - 06	1		2696 S4	A3+	2696	S4
	125	Road Ripper	06 -	1		2696 S4	A3+	2696	S4

TM

SMM	125	Black Dream (Rim brake)	04 - 07			NA		2249	RX3
SMM	125	Black Dream (2T)	08 - 10	1		1033 XBK5	A3+	2249	RX3
SMR	125	(2T)	05 - 10	1		2247 XBK5	A3+	2314	RX3
SME	250	(4T)	04	1		2247 XBK5	A3+	2314	RX3
SM	250		02	1		2247 XBK5	A3+	2314	RX3
SMM	250	(2T)	05 - 10	1		2247 XBK5	A3+	2249	RX3
SMM	250	F (4T)	10	1		1033 XBK5	A3+	2314	RX3
SMR	250	(2T)	05 - 08	1		2247 XBK5	A3+	2314	RX3
SMR	250	F (4T)	10	1		1033 XBK5	A3+	2314	RX3
SMM	300	(2T)	05 - 10	1		2247 XBK5	A3+	2249	RX3
SMR	300	(2T)	05 - 10	1		2247 XBK5	A3+	2314	RX3
SME	400	(4T)	04	1		2247 XBK5	A3+	2314	RX3
SMM	400	(4T) (Rim brake)	04			NA		2249	RX3
SM	400		02 - 03	1		2247 XBK5	A3+	2314	RX3
SMM	450	F Black Dream ES	08 - 10	1		1033 XBK5	A3+	2249	RX3
SMR	450	FES	05 - 09	1		2247 XBK5	A3+	2314	RX3
SMR	450	F (4T)	10	1		1033 XBK5	A3+	2314	RX3
SMX	450	F	05 - 10	1		1033 XBK5	A3+	2314	RX3
SMM	530	F Black Dream (Rim brake)	04 - 07			NA		2249	RX3
SM	530		02 - 03	1		2247 XBK5	A3+	2314	RX3
SME	530	(4T)	04	1		2247 XBK5	A3+	2314	RX3
SMM	530	F Black Dream ES	08 - 10	1		1033 XBK5	A3+	2249	RX3
SMR	530	F	10	1		1033 XBK5	A3+	2314	RX3
SMR	530	F ES	05 - 09	1		2247 XBK5	A3+	2314	RX3
SMX	530	F	05 - 10	1		1033 XBK5	A3+	2314	RX3
SMX	660	F	04	1		2247 XBK5	A3+	2314	RX3
SMX	660	F	05 - 10	1		1033 XBK5	A3+	2314	RX3

TRIUMPH

	600	Daytona	03 - 04	2		2246 XBK5	A3+	2298	RX3
	600	Speed Four	02 - 05	2		2246 XBK5	A3+	2298	RX3
	600	TT	00 - 03	2		2246 XBK5	A3+	2298	RX3
	650	Daytona	05	2		2246 XBK5	A3+	2298	RX3
	675	Daytona (Rad.cal)	06 - 08	2		1083 XBK5	A3+	2298	RX3
	675	Daytona (Rad.cal)	09 -	2		1209 XBK5		2298	RX3
	675	Daytona R (Brembo Rad.cal)	11 - 12	2		1185 XBK5	A3+	2298	RX3
	675	Daytona R (Brembo Rad.cal)	13 -	2		1185 XBK5	A3+	2353	RX3
	675	Street Triple	07 -	2		2256 XBK5	A3+	2298	RX3
	675	Street Triple R	09 - 12	2		1083 XBK5	A3+	2298	RX3
	675	Street Triple R	13 - 14	2		1083 XBK5	A3+	2353	RX3
	675	Street Triple RX	15 -	2		1083 XBK5	A3+	2298	RX3
	750	Bonneville T140	85 - 88	2		2332 A3+		2332	RX3
	750	Daytona	91 - 92	2		2246 XBK5	A3+	2326	RX3
	750	Trident	91 - 98	1	R	2288 A3+		2326	RX3
	750	Trident	91 - 98	1	L	2326 A3+		NA	
	765	Street Triple S	17 -	2		2256 XBK5	A3+	2353	RX3
	765	Street Triple R	17 -	2		1232 XBK5	A3+	2353	RX3
	765	Street Triple RS	17 -	2		1185 XBK5	A3+	2353	RX3
	800	Bonneville	01 - 06	1		2256 A3+		2288	RX3
	800	Bonneville America	02 - 06	1		2256 A3+		2288	RX3
	800	Bonneville T100	02 - 04	1		2256 A3+		2288	RX3
	800	Speedmaster	03 - 04	2		2256 A3+		2288	RX3
	800	Tiger	11 - 14	2		2256 A3+		2298	RX3
	800	Tiger XC	11 - 14	2		2256 XBK5	A3+	2298	RX3
	800	Tiger XC / XCx / XCa	15 -	2		2256 XBK5	A3+	2298	RX3
	800	Tiger XR / XRx / XRt	15 -	2		2256 XBK5	A3+	2298	RX3

1 - 2 = Nombre de jeux avant / Number of front sets / Anzahl Sets / Numero blister / Numero des juegos
L = Gauche / Left / Links / Sinistra / Izquierda
R = Droite / Right / Rechts / Destra / Derecha
NA = Non attribué / Not Available / Nicht verfügbar / Non disponible / No disponible

Best choice = Meilleur choix / Empfehlung / Mescola consigliata / Pastilla recomandata
Other choice = Autre choix / Weiterer Auswahlmöglichkeiten / Altra mescola / Otra posibilidad

TRIUMPH

						Best choice		Other choice	Best choice	
	865	Bonneville T100	05 - 09	1		2256	A3+		2288	RX3
	865	Bonneville T100	10 - 13	1		2256	A3+		2288	RX3
	865	Bonneville T100 Black	14 -	1		2313	A3+		2288	RX3
	865	Bonneville T214	15 -	1		2256	A3+		2288	RX3
	865	Bonneville America	10 - 13	1		2256	A3+		2288	RX3
	865	Bonneville America	14 -	1		2256	A3+		2288	RX3
	865	Bonneville Newchurch	15 -	1		2256	A3+		2288	RX3
	865	Bonneville Spirit	15 -	1		2256	A3+		2288	RX3
	865	Scrambler	06 - 13	1		2256	A3+		2288	RX3
	865	Speedmaster	05 - 10	2		2256	A3+		2288	RX3
	865	Speedmaster	10 - 12	2		2313	A3+		2288	RX3
	865	Speedmaster	13 -	1		2313	A3+		2288	RX3
	900	Adventurer	96 -	1		2256	A3+		2313	RX3
	900	Bonneville T100	17 -	1		2256	A3+		2288	RX3
	900	Daytona	93 - 96	2		2246	XBK5	A3+	2326	RX3
	900	Daytona Super III	94 - 97	2		2254	XBK5	A3+	2326	RX3
	900	Legend TT	98 - 01	2		2256	A3+		2313	RX3
	900	Speed Triple	94 - 96	2		2246	XBK5	A3+	2326	RX3
T 509	900	Speed Triple	97 - 98	2		2246	XBK5	A3+	2288	RX3
	900	Sprint	93	1	R	2288	A3+		2326	RX3
	900	Sprint	93	1	L	2326	A3+		NA	
	900	Sprint	94 - 98	2		2246	XBK5	A3+	2326	RX3
	900	Sprint Sport Edition	97 - 98	2		2246	XBK5	A3+	2326	RX3
	900	Street Cup	17 -	1		2256	A3+		2288	RX3
	900	Street Scrambler	17 -	1		2256	A3+		2288	RX3
	900	Street Twin	16 -	1		2256	A3+		2288	RX3
	900	Thruxton	04 -	1		2256	A3+		2288	RX3
	900	Thruxton Ace	15 -	1		2256	A3+		2288	RX3
	900	Thunderbird	95 - 03	1		2256	A3+		2313	RX3
	900	Thunderbird Sport	98 - 04	2		2256	A3+		2313	RX3
	900	Tiger	92 - 98	1	R	2288	A3+		2326	RX3
	900	Tiger	92 - 98	1	L	2326	A3+		NA	
	900	Tiger	99 - 00	2		2256	XBK5	A3+	2313	RX3
	900	Trident	91 - 98	1	R	2288	A3+		2326	RX3
	900	Trident	91 - 98	1	L	2326	A3+		NA	
	900	Trophy	91 - 95	1	R	2288	A3+		2326	RX3
	900	Trophy	91 - 95	1	L	2326	A3+		NA	
	900	Trophy	96 -	2		2246	XBK5	A3+	2326	RX3
T 595	950	Daytona	97 - 98	2		2246	XBK5	A3+	2288	RX3
	955	Daytona	99 - 06	2		2246	XBK5	A3+	2288	RX3
	955	Daytona Centennial	02	2		2246	XBK5	A3+	2288	RX3
	955	Speed Triple	99 - 04	2		2246	XBK5	A3+	2288	RX3
	955	Sprint RS	99 - 04	2		2246	XBK5	A3+	2326	RX3
	955	Sprint ST	99 - 04	2		2246	XBK5	A3+	2288	RX3
	955	Tiger (Up to VIN 198874)	00 - 04	2		2256	XBK5	A3+	2313	RX3
	955	Tiger (From VIN 198875)	04 - 06	2		2256	XBK5	A3+	2326	RX3
	1000	Daytona	91 - 95	2		2246	XBK5	A3+	2326	RX3
	1050	Speed Triple (Nissin Rad.cal)	05 - 07	2		1083	XBK5	A3+	2288	RX3
	1050	Speed Triple (Brembo Rad.cal)	08 - 10	2		1033	XBK5	A3+	2288	RX3
	1050	Speed Triple (Brembo Rad.cal)	11 - 15	2		1033	XBK5	A3+	2288	RX3
	1050	Speed Triple R (Brembo Rad.cal)	12 - 15	2		1185	XBK5	A3+	2288	RX3
	1050	Speed Triple S	16 -	2		1185	XBK5	A3+	2288	RX3
	1050	Speed Triple R	16 -	2		1185	XBK5	A3+	2288	RX3
	1050	Sprint GT ABS	10 -	2		2246	XBK5	A3+	2288	RX3
	1050	Sprint ST	05 - 09	2		2246	XBK5	A3+	2288	RX3
	1050	Sprint ST ABS	10 -	2		2246	XBK5	A3+	2288	RX3
	1050	Tiger	07 - 11	2		1083	XBK5	A3+	2326	RX3
	1050	Tiger SE (ABS)	10 - 13	2		1083	XBK5	A3+	2326	RX3
	1050	Tiger Sport (ABS)	13 -	2		1083	XBK5	A3+	2288	RX3
	1200	Bonneville T120	16 -	2		2256	A3+		2288	RX3
	1200	Bonneville Bobber	17 -	1		2256	A3+		2288	RX3
	1200	Bonneville Speedmaster	18 -	2		2352	A3+		2288	RX3
	1200	Daytona	93 - 98	2		2246	XBK5	A3+	2326	RX3
	1200	Tiger Explorer	12 - 15	2		2246	XBK5	A3+	2288	RX3
	1200	Tiger Explorer	16 - 17	2		1232	XBK5	A3+	2288	RX3
	1200	Tiger XC / XCx / XCa	18 -	2		1232	XBK5	A3+	2288	RX3
	1200	Tiger XR / XRx / XRt	18 -	2		1232	XBK5	A3+	2288	RX3
	1200	Trophy	91 - 95	1	R	2288	A3+		2326	RX3
	1200	Trophy	91 - 95	1	L	2326	A3+		NA	
	1200	Trophy	96 - 03	2		2246	XBK5	A3+	2326	RX3
	1200	Thruxton	16 -	2		2256	A3+		2288	RX3
	1200	Thruxton R	16 -	2		1185	XBK5	A3+	2288	RX3
	1215	Trophy	12 - 13	2		1175	XBK5	A3+	2288	RX3
	1215	Trophy SE	12 - 14	2		1175	XBK5	A3+	2288	RX3
	1600	Thunderbird	09 - 13	2		2246	XBK5	A3+	2396	RX3
	1700	Thunderbird Commander	14 -	2		2246	XBK5	A3+	2396	RX3
	1700	Thunderbird Night Storm	15 -	2		2246	XBK5	A3+	2396	RX3
	1700	Thunderbird Storm	11 - 13	2		2246	XBK5	A3+	2396	RX3
	1700	Thunderbird LT	14 -	2		2246	XBK5	A3+	2396	RX3
	2300	Rocket III	04 -	2		2246	XBK5	A3+	2396	RX3
	2300	Rocket III Classic	07 -	2		2246	XBK5	A3+	2396	RX3
	2300	Rocket III Roadster	10 -	2		2246	XBK5	A3+	2396	RX3
	2300	Rocket III Touring	13 -	2		2246	XBK5	A3+	2396	RX3

TRIUMPH

					Best choice		Other choice	Best choice	
	2300	Rocket X	15 -	2	2246	XBK5	A3+	2396	RX3

VERTEMATI

SR	450	Motard Racing	04 -	1	2352	XBK5	A3+	2353	RX3
S	501	E Motard	04 -	1	2352	XBK5	A3+	2353	RX3
S	501	Supermoto	01 -	1	2352	XBK5	A3+	2353	RX3
S	570	E Motard	03 -	1	2352	XBK5	A3+	2353	RX3
SR	600	Motard Racing	04 -	1	2352	XBK5	A3+	2353	RX3

VICTORY

Kingpin	1500		04 - 07	1	2539	A3+		2396	RX3
Kingpin	1500	Tour	04 - 07	1	2539	A3+		2396	RX3
Touring	1500	Cruiser	05 -	2	2539	A3+		2396	RX3
V92	1500	V92C Cruiser / Deluxe	98 - 03	1	2539	A3+		2396	RX3
V92	1500	V92SC Sport Cruiser	00 - 03	2	2539	A3+		2396	RX3
Hammer	1634		05 - 07	2	2539	A3+		2396	RX3
Hammer	1634	S	07 - 08	2	2539	A3+		2396	RX3
Kingpin	1634	8-Ball / Low / Tour	08 - 10	1	1083	XBK5	A3+	2313	RX3
Vegas	1634		03 - 07	1	2539	A3+		2396	RX3
Vegas	1634	Arlen Ness / Jackpot	04 - 07	1	2539	A3+		2396	RX3
Vegas	1634	Cory Ness Jackpot	08 - 10	1	1083	XBK5	A3+	2313	RX3
Vegas	1634	8-Ball	05 - 07	1	2539	A3+		2396	RX3
Vegas	1634	/ Low	08 - 10	1	1083	XBK5	A3+	2313	RX3
Vegas	1634	8-Ball	08 - 10	1	1083	XBK5	A3+	2313	RX3
Cross Country	1731		10 -	2	1083	XBK5	A3+	2313	RX3
Cross Roads	1731		10 -	2	1083	XBK5	A3+	2313	RX3
Hammer	1731	/ S	08 - 10	2	1083	XBK5	A3+	2313	RX3
Hammer	1731	8-Ball	10 -	2	1083	XBK5	A3+	2313	RX3
Vegas	1731		08 - 10	1	1083	XBK5	A3+	2313	RX3
Vegas	1731	Jackpot	10 -	2	1083	XBK5	A3+	2313	RX3
Vision	1731	Arlen Ness Victory	10 -	2	2602	XBK5	A3+	2313	RX3
Vision	1731	Street / Tour	08 - 10	2	2602	XBK5	A3+	2313	RX3
Vision	1731	8-Ball	10 -	2	2602	XBK5	A3+	2313	RX3

VOR

SM	400		00 - 02	1	2247	XBK5	A3+	2353	RX3
SM	450		02	1	2247	XBK5	A3+	2353	RX3
SM	500		00 - 02	1	2247	XBK5	A3+	2353	RX3
SM	530		02 -	1	2247	XBK5	A3+	2353	RX3

VOXAN

VB1	1000	EVO	03 - 04	2	2539	XBK5	A3+	2827	RX3
	1000	Black Magic	04 - 08	2	2539	XBK5	A3+	2827	RX3
	1000	Café-Racer	02 - 05	2	2247	XBK5	A3+	2827	RX3
	1000	Café-Racer	06 - 08	2	2539	XBK5	A3+	2827	RX3
	1000	Charade Racing	06	2	1033	XBK5	A3+	2249	RX3
	1000	Roadster	02 - 05	2	2247	XBK5	A3+	2827	RX3
	1000	Roadster	06 - 08	2	2539	XBK5	A3+	2827	RX3
	1000	Scrambler	06 -	2	2256	XBK5	A3+	2326	RX3
	1000	Street Scrambler	03 - 05	2	2247	XBK5	A3+	2827	RX3
	1000	Street Scrambler	07 - 08	2	2539	XBK5	A3+	2827	RX3
	1200	GTV	08 -	2	1033	XBK5	A3+	2827	RX3

YAMAHA

DT	50	LC	98 -	1	2424	S4		T	
FZR	50		90 - 91	1	2326	A3+	S4	2301	RX3
FZR	50		92 -	1	2288	A3+	S4	2299	RX3
RD	50	/ MX	81 - 87	1	2807	A3+	S4	T	
TDR	50		90 -	1	2284	A3+	S4	2284	RX3
TZM	50	R	94 -	1	2326	A3+	S4	2284	RX3
TZR	50		90 - 92	1	2326	A3+	S4	2284	RX3
TZR	50		93 - 02	1	2326	A3+	S4	2284	RX3
TZR	50		03 - 08	1	1146	S4		2377	RX3
YSR	50	A / B / D / T / U / W	87 - 92	1	2284	A3+	S4	T	
DT	80	LC (37A)	81 - 84	1	2802	A3+	S4	T	
DT	80	LC-2 (53V)	85 - 92	1	2284	A3+	S4	T	
RD	80	Air Cooled	81 -	1	2807	A3+	S4	T	
RD	80	LC	81 - 82	1	2802	A3+	S4	T	
RD	80	LC	83 -	1	2284	A3+	S4	T	
RX	80	SE	82 -	1	2807	A3+	S4	T	
TDR	80		89	1	2284	A3+	S4	2284	RX3
TZR	80		- 91	1	2301	A3+	S4	T	
TZR	80		92 -	1	2696	S4	A3+	2284	RX3
YD	80		89 -	1	2288	A3+	S4	2299	RX3
YSR	80		86 -	1	2284	A3+	S4	T	
FJ	100	L / LC	84 -	1	2283	A3+	S4	2283	RX3
RX	100		84 -	1	2802	A3+	S4	T	
RX	115	S	82 - 84	1	2802	A3+	S4	T	

1 - 2 = Nombre de jeux avant / Number of front sets / Anzahl Sets / Numero blister / Numero des juegos
L = Gauche / Left / Links / Sinistra / Izquierda
R = Droite / Right / Rechts / Destra / Derecha
NA = Non attribué / Not Available / Nicht verfügbar / Non disponible / No disponible

Best choice = Meilleur choix / Empfehlung / Mescola consigliata / Pastilla recomandata
Other choice = Autre choix / Weiterer Auswahlmöglichkeiten / Altra mescola / Otra posibilidad

YAMAHA

					Best choice		Other choice	Best choice	
DT	125	LC	85 - 87	1	2284	A3+	S4	T	
DT	125	R	88 - 03	1	2284	A3+	S4	2284	RX3
DT	125	RE	04	1	2284	A3+	S4	2284	RX3
DT	125	RE	05 - 07	1	2284	A3+	S4	2299	RX3
DT	125	X Supermotard	05 - 06	1	2396	XBK5	A3+	2299	RX3
DT-Z	125	Ténéré / Scout	89 - 90	1	2400	A3+	S4	T	
MT-125	125		15 -	1	1187	XBK5		1147	RX3
RD	125	LC	82 - 84	1	2802	A3+	S4	T	
RD	125	LC	85 - 87	1	2301	A3+	S4	T	
RZ	125	(1GV 030101-)	85 -	1	2301	A3+	S4	T	
SR	125	SE	92 - 96	1	2802	A3+	S4	T	
SR	125		97 - 03	1	2546	A3+	S4	T	
SX	125	R	88 -	1	2408	A3+	S4	T	
TDR	125	(4GW/GX1/2/3/4)	93 - 03	1	2546	A3+	S4	2284	RX3
TDR	125	(3HS1/3XD03SH3/3XD1)	89 - 93	1	2400	A3+	S4	2306	RX3
TDR	125	R (3SH2/3XE2) Lightburner	93 - 94	1	2400	A3+	S4	2249	RX3
TW	125		99 - 02	1	2828	S4		T	
TW	125	R / S	03 - 04	1	2828	S4		T	
TZ	125		97 -	1	2246	XBK5	A3+	2269	RX3
TZR	125	(2RK / 3PC1)	87 - 89	1	2301	A3+	S4	T	
TZR	125	(3PC2 / 3PC3)	90 - 92	1	2283	A3+	S4	2301	RX3
TZR	125	(3JB / 4JB / 4HW / 4HX)	93 - 95	1	2546	A3+	S4	2301	RX3
TZR	125	R (4DL1 / 4DL2) (Brembo)	91 - 93	1	2247	A3+	S4	2249	RX3
TZR	125	RR (4DL3) (Brembo)	94 - 95	1	2247	A3+	S4	2249	RX3
TZR	125	R (4FL)	97 - 98	1	2361	A3+	S4	2249	RX3
WR	125	R	09 -	1	2256	A3+	S4	2353	RX3
WR	125	X Supermotard	09 -	1	2256	A3+	S4	2353	RX3
XT	125	R	05 -	1	1223	A3+		1223	RX3
XT	125	X Supermotard	05 -	1	1146	S4		1223	RX3
XTZ	125	(5RM)	03 -	1	2288	A3+	S4	T	
XV	125	Virago	97 - 00	1	2546	A3+	S4	T	
XVS	125	Dragstar	00 - 04	1	2546	A3+	S4	T	
YBR	125	(3D91)	05 - 06	1	2284	A3+	S4	T	
YBR	125	(3D92/9)	07 -	1	1224	A3+	S4	T	
YBR	125	Custom	08 -	1	1224	A3+	S4	T	
YZF	125	R-125	08 - 13	1	2352	A3+		1147	RX3
YZF	125	R-125	14 -	1	1187	XBK5		1147	RX3
RX	135	(13X)	81	1	2802	A3+		T	
TZR	150	(4AP2)	00 -	1	2546	A3+		2301	RX3
DT	200	R	85 - 87	1	2284	A3+		NA	
DT	200	R	89	1	2284	A3+		2284	RX3
DT	200	WR	91 - 93	1	2288	A3+		2299	RX3
SDR	200		87 - 89	1	2301	A3+		2301	RX3
TW	200		01 - 02	1	2828	S4		T	
ST	225	Bronco	97	1	2828	S4		T	
TW	225		03	1	2828	S4		T	
XT	225	Serrow	86 - 93	1	2284	A3+		T	
XT	225	Serrow W	93 - 98	1	2284	A3+		2299	RX3
XT	225		05 -	1	2828	S4		T	
DT	230	Lanza	97 - 98	1	2288	A3+		2299	RX3
XV	240	Virago	92 -	1	2802	A3+		T	
FZ	250	Fazer N / S	85 - 86	2	2283	A3+		T	
FZR	250		87 - 88	2	2305	XBK5	A3+	2301	RX3
FZR	250	R	89 -	2	2361	A3+		2301	RX3
FZX	250	Zeal	91 - 92	1	2391	A3+		2301	RX3
R1-Z	250		90 -	1	2361	A3+		2301	RX3
RD	250	LC	81 - 82	1	2807	A3+		T	
RD	250	LC	83 -	1	2802	A3+		2283	RX3
RZ	250	(4L3)	80 -	1	2802	A3+		T	
RZ	250	R (29L)	80 -	2	2802	A3+		2301	RX3
RZ	250	R (1AR/1XG)	80 -	2	2301	A3+		2301	RX3
RZ	250	RR (5IL)	88 -	2	2301	A3+		2301	RX3
SR	250	Classic	96 - 00	1	2802	A3+		T	
SRV	250	(4DN1-6)	92 - 97	1	2391	A3+		T	
SRX	250	T / TC	84 - 87	1	2301	A3+		T	
TDR	250		88 - 92	1	2305	XBK5	A3+	2301	RX3
TZ	250	GP / A / D	90 - 95	2	2246	XBK5	A3+	2269	RX3
TZ	250		97 -	2	2361	XBK5	A3+	2269	RX3
TZR	250		87 - 92	1	2305	XBK5	A3+	2301	RX3
TZR	250	/ SP / R / RS / SPR	89 - 96	2	2361	XBK5	A3+	2301	RX3
WR	250	R	08 -	1	2300	A3+		1103	RX3
WR	250	X Supermotard	08 -	1	2256	A3+		1103	RX3
XG	250	Tricker	04 - 06	1	2828	S4		2299	RX3
XS	250	C	77 - 78	1	2847	A3+		2847	RX3
XS	250	D / E	79 - 81	1	2847	A3+		T	
XT	250	X Supermotard	06 - 08	1	2828	S4		2299	RX3
XV	250	Virago	88 - 90	1	2802	A3+		T	
XV	250	Virago	91 - 92	1	2392	A3+		T	
XV	250	Virago	93 - 95	1	2802	A3+		T	
XV	250	Virago S	95 - 00	1	2546	A3+		T	
XVS	250	Dragstar	01 - 03	1	2546	A3+		T	
YBR	250		07 -	1	2326	A3+		T	
YZF	321	R3	15 -	1	1240	XBK5		1241	RX3

YAMAHA

					Best choice		Other choice	Best choice	
MT-03	321		16 -	1	1240	XBK5		1241	RX3
RD	350	LC (4LO)	81 - 82	2	2807	A3+		T	
RD	350	YPVS	83 - 84	2	2802	A3+		2283	RX3
RD	350	N / F / F2	85 - 92	2	2301	A3+		2301	RX3
RD	350	R	92 - 95	2	2301	A3+		2301	RX3
RZ	350	L / N / NC	84 - 85	2	2802	A3+		2283	RX3
RZ	350	F	86 - 88	2	2301	A3+		2301	RX3
XT	350		85 - 90	1	2284	A3+		T	
XT	350	B-H	91 - 95	1	2284	A3+		T	
XS	360	C / D	76 -	1	2847	A3+		2847	RX3
FZ	400	N	85	2	2283	A3+		2301	RX3
FZ	400	R	86 - 87	2	2539	XBK5	A3+	2301	RX3
FZR	400	Genesis (1WG)	86	2	2283	A3+		2301	RX3
FZR	400	R SP (2TK-Exup)	87	2	2305	XBK5	A3+	2301	RX3
FZR	400	(3EN1)	88	2	2305	XBK5	A3+	2301	RX3
FZR	400	R (3EN2)	89	2	2305	XBK5	A3+	2301	RX3
FZR	400	RR (3TJ1 / 4DX)	89 - 92	2	2361	XBK5	A3+	2301	RX3
FZR	400	RR SP (3TJ1 / 4DX)	91 - 94	2	2361	XBK5	A3+	2301	RX3
SR	400		14 -	1	2546	A3+		T	
SRX	400	(1JL)	85 - 86	1	2283	A3+		2301	RX3
SRX	400	(3VN)	90 - 96	1	2305	XBK5	A3+	2301	RX3
XJ	400		82	2	2802	A3+		2283	RX3
XJ	400	S Diversion	91 -	1	2391	A3+		2301	RX3
XJR	400	R	93 - 96	2	2546	XBK5	A3+	2301	RX3
XJR	400	R (Brembo)	95 - 99	2	2539	XBK5	A3+	2301	RX3
XJR	400		02 -	2	2361	XBK5	A3+	1066	RX3
XS	400	C / E / F	77 - 79	1	2847	A3+		2847	RX3
XS	400	DOHC	82	1	2802	A3+		T	
XS	400	RJ / RK / J / K	83 - 83	1	2802	A3+		T	
XS	400	Z	83 -	1	2283	A3+		2283	RX3
XT	400	Artesia	91 -	1	2360	A3+		2284	RX3
XV	400	Virago	88 -	1	2392	A3+		T	
XVS	400	Drag Star	96 -	1	2391	A3+		T	
RD	500		83	2	2283	A3+		2283	RX3
RD	500	LC (RVZ500R)	84 - 86	2	2283	A3+		2301	RX3
RZ	500		84 - 86	2	2283	A3+		2301	RX3
SR	500		78 - 82	1	2847	A3+		T	
XS	500	C / D	78 - 79	1	2847	A3+		2847	RX3
XS	500	DOHC	82 -	1	2802	A3+		T	
XV	500		83 -	1	2802	A3+		T	
XV	535	Virago	88 - 94	1	2392	A3+		T	
XV	535	Virago / S Virago	95 - 03	1	2391	A3+		T	
XJ	550		81 - 84	2	2807	A3+		T	
XJ	550	H/J/K/RH/RJ/RK Maxim / Seca	81 - 83	1	2807	A3+		T	
XZ	550		82 - 84	2	2802	A3+		T	
FJ	600		84 -	2	2283	A3+		2283	RX3
FZ	600		87 - 88	2	2283	A3+		2301	RX3
FZR	600		89	2	2283	A3+		2283	RX3
FZR	600	/ R	90 - 95	2	2311	XBK5	A3+	2283	RX3
FZS	600	Fazer	98 - 03	2	2361	XBK5	A3+	2301	RX3
FZ6	600	N / Fazer	04 - 07	2	2546	XBK5	A3+	2296	RX3
FZ6	600	N / Fazer ABS	06 - 07	2	2546	XBK5	A3+	2296	RX3
FZ6	600	N / Fazer S2	07 - 09	2	2361	XBK5	A3+	2296	RX3
FZ6	600	N / Fazer S2 ABS	08	2	2361	XBK5	A3+	2296	RX3
SRX	600	(1JK)	85 - 87	2	2301	A3+		2301	RX3
SRX	600	(3SX)	90	1	2305	XBK5	A3+	2301	RX3
TT	600	N	85 - 88	1	2284	A3+		T	
TT	600	E	94 - 01	1	2352	A3+		2353	RX3
TT	600	E (Belgarda)	94 - 95	1	2352	A3+		2299	RX3
TT	600	K (Belgarda)	93 - 95	1	2352	A3+		2299	RX3
TT	600	K (From 4GV 003404)	95 - 96	1	2352	A3+		2353	RX3
TT	600	R (5CH1 / 5CH2 / 5CH3)	97 - 02	1	2352	A3+		2353	RX3
TT	600	RE (5CH5)	04	1	2352	A3+		2353	RX3
XJ	600		83 - 91	2	2283	A3+		2283	RX3
XJ	600	N / S Diversion	92 - 97	1	2391	A3+		2301	RX3
XJ	600	N / S Diversion	98 - 03	2	2546	A3+		2301	RX3
XJ6	600	/ ABS	09 -	2	2546	A3+		2298	RX3
XJ6	600	Diversion / ABS	09 -	2	2546	A3+		2298	RX3
XJ6	600	Diversion F / ABS	10 -	2	2546	A3+		2298	RX3
XT	600		84 - 86	1	2802	A3+		T	
XT	600		87 - 89	1	2393	A3+		2284	RX3
XT	600	E / K	90 - 03	1	2360	A3+		2284	RX3
XT	600	Z Ténéré	84	1	2802	A3+		T	
XT	600	Ténéré	85 - 88	1	2393	A3+		T	
XT	600	Z Ténéré	88 - 90	1	2393	A3+		2284	RX3
YX	600	Radian	86 - 90	2	2283	A3+		T	
YZF	600	R Thunder Cat	96 - 03	2	2361	XBK5	A3+	2283	RX3
YZF	600	R6	99 - 02	2	2361	XBK5	A3+	2828	RX3
YZF	600	R6	03 - 05	2	2361	XBK5	A3+	2296	RX3
YZF	600	R6	06 - 09	2	2361	XBK5	A3+	2296	RX3
YZF	600	R6	10 -	2	2361	XBK5	A3+	2296	RX3
XJ	650		80 - 84	2	2847	A3+		T	
XJ	650	RJ Seca	82	2	2847	A3+		T	

1 - 2 = Nombre de jeux avant / Number of front sets / Anzahl Sets / Numero blister / Numero des juegos
L = Gauche / Left / Links / Sinistra / Izquierda
R = Droite / Right / Rechts / Destra / Derecha
NA = Non attribué / Not Available / Nicht verfügbar / Non disponible / No disponible

Best choice = Meilleur choix / Empfehlung / Mescola consigliata / Pastilla recomandata
Other choice = Autre choix / Weiterer Auswahlmöglichkeiten / Altra mescola / Otra posibilidad

YAMAHA

					Best choice		Other choice	Best choice	
XJ	650	LK Seca	83	2	2802	A3+		T	
XJ	650	Turbo	82	2	2802	A3+		T	
XS	650	D1E / F / F2	77 - 79	2	2847	A3+		T	
XS	650	SE	79 - 80	1	2847	A3+		2847	RX3
XS	650	SE	81	1	2847	A3+		T	
XS	650	G / H / J / K	80 - 82	2	2847	A3+		T	
XS	650	SJ / SK Heritage	82 -	1	2847	A3+		T	
XVS	650	Drag Star	97 - 04	1	2391	A3+		T	
XVS	650	A Drag Star Classic	98 - 07	1	2391	A3+		T	
MT-03	660		06 - 12	2	2546	A3+		2353	RX3
SZR	660		96 - 97	1	2247	XBK5	A3+	2249	RX3
XT	660	R	04 -	1	2396	A3+		2353	RX3
XT	660	X Supermotard	04 -	1	2539	XBK5	A3+	2353	RX3
XT	660	Z Ténéré	08 -	2	2352	A3+		2353	RX3
XTZ	660	Ténéré	91 - 98	1	2360	A3+		2284	RX3
FZ	700		87 -	2	2283	A3+		2283	RX3
FZX	700	Fazer	87 -	2	2283	A3+		2283	RX3
MT-07	700		14 -	2	2361	XBK5	A3+	2296	RX3
	700	Tracer	16 -	2	2361	XBK5	A3+	2296	RX3
XJ	700	/ Maxim	85 -	2	2283	A3+		T	
XSR	700		16 -	2	2361	XBK5	A3+	2296	RX3
XV	700	Virago	84 -	2	2283	A3+		T	
FZ	750		85 - 88	2	2283	A3+		2283	RX3
FZ	750		89 - 91	2	2305	XBK5	A3+	2283	RX3
FZR	750	R (OW01)	89 - 90	2	2246	XBK5	A3+	2283	RX3
FZR	750	R Genesis	87 - 88	2	2305	XBK5	A3+	2283	RX3
FZX	750	Fazer	86 -	2	2283	A3+		2283	RX3
XJ	750	RH / RJ / RK / Seca / Maxim	81 - 83	2	2807	A3+		T	
XJ	750		82 - 84	2	2807	A3+		T	
XS	750		77 - 79	2	2847	A3+		2847	RX3
XS	750	SE	79 - 80	2	NA			2847	RX3
XTZ	750	Super Ténéré	89 - 94	1 L	2288	A3+		2326	RX3
XTZ	750	Super Ténéré	89 - 94	1 R	2326	A3+		T	
XV	750	Virago	89 - 93	2	2283	A3+		T	
XV	750	Virago	94 - 97	2	2391	A3+		T	
YZF	750	R / SP	93 - 97	2	2254	XBK5	A3+	2283	RX3
YZF	750	R7 (OW02)	99 - 01	2	2361	XBK5	A3+	2713	RX3
YZF	750	R7 (OW02) "Race Kit"	99 - 01	2	2899	XBK5	A3+	NA	
FZ8	800		10 -	2	2361	XBK5	A3+	2296	RX3
FZ8S	800	Fazer	10 -	2	2361	XBK5	A3+	2296	RX3
MT-09	900		14 -	2	2361	XBK5	A3+	2296	RX3
MT-09	900	Tracer	15 -	2	2361	XBK5	A3+	2296	RX3
TDM	850		91 - 95	2	2305	XBK5	A3+	2283	RX3
TDM	850		96 - 01	2	2311	XBK5	A3+	2283	RX3
TRX	850		96 - 99	2	2305	XBK5	A3+	2283	RX3
TRX	850	(Japan models) (Brembo)	96 - 99	2	2539	XBK5	A3+	2283	RX3
XS	850		80	2	2847	A3+		2847	RX3
	900	Niken	18 -	2	2361	XBK5	A3+	2296	RX3
TDM	900		02 -	2	2361	XBK5	A3+	1084	RX3
TDM	900	ABS	05 -	2	2361	XBK5	A3+	1084	RX3
XJ	900	/ F	83 - 93	2	2283	A3+		2283	RX3
XJ	900	S Diversion	94 - 03	2	2391	A3+		2283	RX3
XSR	900		16 -	2	2361	XBK5	A3+	2296	RX3
XV	920	J Virago	82	2	2807	A3+		T	
SCR	950		17 -	1	2391	A3+		1084	RX3
XVS	950	A Midnight Star	09 -	1	2391	A3+		1084	RX3
XVS	950	Bolt / Bolt R	14 -	1	2391	A3+		1084	RX3
FZR	1000	Genesis	87 - 89	2	2305	XBK5	A3+	2283	RX3
FZR	1000	EXUP	89 - 90	2	2311	XBK5	A3+	2283	RX3
FZR	1000	EXUP	91 - 93	2	2309	XBK5	A3+	2283	RX3
FZR	1000	EXUP	94 - 95	2	2254	XBK5	A3+	2283	RX3
FZS	1000	Fazer	01 - 05	2	2361	XBK5	A3+	1066	RX3
FZ-1	1000	N / Fazer	06 -	2	2361	XBK5	A3+	2296	RX3
FZ-1	1000	N / Fazer ABS	08 -	2	2361	XBK5	A3+	2296	RX3
GTS	1000	/ ABS	93 - 99	1	2362	A3+		2283	RX3
MT-10	1000	/ SP	16 -	2	2361	XBK5	A3+	1174	RX3
XV	1000	TR1	81 -	2	2847	A3+		T	
XV	1000	Virago / SE Virago	84 -	2	2283	A3+		T	
YZF	1000	R Thunder Ace	96 - 01	2	2361	XBK5	A3+	2283	RX3
YZF	1000	R1	98 - 01	2	2361	XBK5	A3+	2713	RX3
YZF	1000	R1	02 - 03	2	2361	XBK5	A3+	2828	RX3
YZF	1000	R1 / R1 SP	04 - 06	2	2361	XBK5	A3+	2296	RX3
YZF	1000	R1 (Rad.cal)	07 - 08	2	1180	XBK5	A3+	2296	RX3
YZF	1000	R1 (Rad.cal)	09 - 14	2	1180	XBK5	A3+	2296	RX3
YZF	1000	R1 / R1 M	15 -	2	2361	XBK5	A3+	1174	RX3
BT	1100	Bulldog	02 - 06	2	2361	A3+		2283	RX3
FJ	1100		84 - 85	2	2283	A3+		2283	RX3
XJ	1100	Maxim	81 -	2	2807	A3+		T	
XS	1100		78 - 80	1	2847	A3+		2847	RX3
XS	1100	S	81	2	2807	A3+		2847	RX3
XV	1100	Virago	86 - 93	2	2283	A3+		T	
XV	1100	Virago	94 - 98	2	2391	A3+		T	
XV	1100	Virago	99	2	2546	A3+		2283	RX3

YAMAHA

					Best choice		Other choice	Best choice	
XVS	1100	Dragstar / A Dragstar Classic	99 - 06	2	2546	A3+		2283	RX3
XVS	1100	V-Star Custom	05 -	2	2546	A3+		2283	RX3
FJ	1200	(ITX Type)	86 - 87	2	2283	A3+		2283	RX3
FJ	1200	(3CV/CXW Type)	88 - 95	2	2305	XBK5	A3+	2283	RX3
FJ	1200	A ABS	91 - 95	2	2311	XBK5	A3+	2283	RX3
XJR	1200	/ SP	95 - 98	2	2305	XBK5	A3+	2283	RX3
XJR	1200	(Japan models) (Brembo Cal.)	95 - 98	2	2539	XBK5	A3+	2283	RX3
XT	1200	Z Super Ténéré (ABS/UBS)	10 - 13	2	2361	XBK5	A3+	1084	RX3
XT	1200	Z/ZE Super Ténéré (ABS/UBS)	14 -	2	2361	XBK5	A3+	1084	RX3
XV	1200	V-Max	85 - 92	2	2283	A3+		2283	RX3
XV	1200	V-Max	93 - 01	2	2311	XBK5	A3+	2283	RX3
XVZ	1200	TD Venture Royale	85	2	2283	A3+		2283	RX3
FJR	1300		01 - 02	2	2361	XBK5	A3+	1084	RX3
FJR	1300	/ ABS	03 - 05	2	2361	XBK5	A3+	1084	RX3
FJR	1300	A / AS ABS	06 -	2	1175	XBK5	A3+	1084	RX3
FJR	1300	AE	14 -	2	1175	XBK5	A3+	1084	RX3
XJR	1300	(Japan models) (Brembo Cal.)	98 - 99	2	2539	XBK5	A3+	2283	RX3
XJR	1300	/ SP	99 - 01	2	2361	XBK5	A3+	2283	RX3
XJR	1300		02 - 14	2	2361	XBK5	A3+	1066	RX3
XJR	1300	Racer	15 -	2	2361	XBK5	A3+	1066	RX3
XVS	1300	A Midnight Star	07 - 10	2	2546	A3+		1084	RX3
XVS	1300	A Midnight Star	07	2	1175	A3+		1084	RX3
XVS	1300	A Midnight Star	14 -	2	2546	A3+		1084	RX3
XVS	1300	Custom	14 -	1	2546	A3+		1084	RX3
XVZ	1300	A Royal Star / Tour Classic	96 - 01	2	2253	A3+		2305	RX3
XVZ	1300	TF Venture Star	99 - 01	2	2391	A3+		2305	RX3
XVZ	1300	Venture Royale	86 - 89	2	2253	A3+		2305	RX3
XVZ	1300	Venture Royale	90 - 95	2	2253	A3+		2305	RX3
XV	1600	A Wild Star	99 - 04	2	2391	A3+		2305	RX3
MT-01	1700	(4 piston caliper)	05 - 06	2	2361	XBK5	A3+	2313	RX3
MT-01	1700	(6 piston caliper)	07 - 09	2	1180	XBK5	A3+	2313	RX3
MT-01	1700	S (6 piston caliper)	09	2	1180	XBK5	A3+	2313	RX3
XV	1700	A / PC Road Star	02 - 05	2	2361	XBK5	A3+	1084	RX3
XV	1700	Y V-Max	09 -	2	1180	XBK5	A3+	1084	RX3
XV	1900	A Midnight Star	06 - 12	2	2361	XBK5	A3+	1084	RX3
XV	1900	A Midnight Star / CFD	13 - 14	2	1175	XBK5	A3+	1084	RX3

1 - 2 = Nombre de jeux avant / Number of front sets / Anzahl Sets / Numero blister / Numero des juegos
L = Gauche / Left / Links / Sinistra / Izquierda
R = Droite / Right / Rechts / Destra / Derecha
NA = Non attribué / Not Available / Nicht verfügbar / Non disponible / No disponible

Best choice = Meilleur choix / Empfehlung / Mescola consigliata / Pastilla recomandata
Other choice = Autre choix / Weiterer Auswahlmöglichkeiten / Altra mescola / Otra posibilidad

Racing

APRILIA

RS	125 / Extrema / Replica	93 - 98	1	2398	C60	1167	RX3
RS	125 R Piste	04 -	1	2398	C60	1167	RX3
RS	250	95 - 96	1	2247	C60	2249	RX3
RS	250	97 - 02	2	2539	C60	2249	RX3
RS	250 R Piste	04 -	2	2539	C60	2249	RX3
SXV	450	06 -		NA		1103	RX3
SXV	450 Van den Bosh Rep.	08 -	1	2329	C60	1103	RX3
SXV	550	06 -		NA		1103	RX3
SXV	550 Van den Bosh Rep.	08 -	1	2329	C60	1103	RX3
RSV	1000 Factory Pista	04 -	2	1033	C60	2827	RX3
RSV	1000 Nera	04 -	2	1033	C60	2827	RX3
RSV	1000 R	00	2	2539	C60	2827	RX3
RSV	1000 R	01 - 02	2	1033	C60	2827	RX3
RSV	1000 R	03 -	2	1033	C60	2827	RX3
RSV	1000 R Factory Replica	04 -	2	1033	C60	2827	RX3
RSV	1000 SP	00 -	2	2539	C60	2827	RX3
RSV	1000	97 - 01	2	2539	C60	2827	RX3
RSV	1000	02 -	2	1033	C60	2827	RX3
RSV4	1000 Factory	09 -	2	1185	C60	2827	RX3
RSV4	1000 R	10 -	2	1185	C60	2827	RX3
RSV4	1000 RR	15 -	2	1185	C60	2827	RX3
V4R	1000 Tuono	11 -	2	1185	C60	2827	RX3

BENELLI

BX	449 Supermotard	08 -	2	1033	C60	2353	RX3
	900 Tornado 3	00 - 02	2	2539	C60	2249	RX3
	900 Tornado Tre	03 -	2	1033	C60	2827	RX3
	900 Tornado Tre RS (Rad.cal)	04 -	2	1033	C60	2827	RX3
TNT	1100	04	2	2539	C60	2249	RX3
TNT	1130	05 -	2	2539	C60	2827	RX3
TNT	1130 Café Racer	05 -	2	1033	C60	2827	RX3
TNT	1130 Sport / Titanium	05 -	2	1033	C60	2827	RX3
TNT	1130 Officine	07 -	2	1033	C60	2827	RX3
TNT	1130 Tornado Tre	08 -	2	1033	C60	2827	RX3
Tre-K	1130	06 -	2	2539	C60	2827	RX3
Tre-K	1130 Amazonas	07 -	2	2539	C60	2827	RX3

BIMOTA

2D	992 Tesi	04 - 06	2	2247	C60	2249	RX3
DB6	992 Delirio	05 - 07	2	1033	C60	2827	RX3
DB5	992 Mille	05 - 07	2	1033	C60	2827	RX3
SB8K	996 Gobert	06	2	2539	C60	2249	RX3
SB8K	996 Santamonica	06	2	1033	C60	2249	RX3
3D	1078 Tesi	09 - 13	2	1033	C60	2249	RX3
DB5	1078 S / R	07 - 09	2	1033	C60	2827	RX3
DB5E	1078 Desiderio	12 - 13	2	1033	C60	2827	RX3
DB6	1078 Delirio / Delirio R	07 - 11	2	1033	C60	2827	RX3
DB6E	1078 Delirio / Delirio R	12 -	2	1033	C60	2249	RX3
DB10	1078 B.Motard	12 - 13	2	1033	C60	2249	RX3
DB7	1098	08	2	1033	C60	2827	RX3
DB7	1098	09	2	1185	C60	2249	RX3
DB8	1098	10 - 13	2	1185	C60	2827	RX3
DB8	1098 SP	10 - 13	2	1185	C60	2249	RX3
DB9	1098 Brivido	12 - 13	2	1033	C60	2827	RX3
DB11	1098	12 - 13	2	1033	C60	2827	RX3
DB11	1098 VLX	12 - 13	2	1033	C60	2827	RX3
DBX	1100	12 - 14	2	2396	C60	2396	RX3
DB8	1198 / SP	10 - 14	2	1185	C60	2827	RX3
DB12	1198 B.Tourist	12 - 13	2	1033	C60	2827	RX3

BMW

S	1000 RR	09 -	2	1207	C60	2353	RX3
S	1000 RR HP4	12 -	2	1185	C60	2353	RX3
S	1000 RR HP4 Race	18 -	2	1185	C60	2353	RX3

CAGIVA

	500 Mito	07	1	2247	C60	2249	RX3
SP	525 Mito	08 -	1	2247	C60	2249	RX3

DUCATI

	748 / S	99 - 03	2	2539	C60	2249	RX3
	748 Biposto / SP / Strada	95 - 99	2	2247	C60	2249	RX3
	748 R	00	2	2539	C60	2249	RX3
	748 R	01 - 03	2	1033	C60	2249	RX3
	748 SPS	98 - 99	2	2539	C60	2249	RX3
	749 / S	03 -	2	1033	C60	2827	RX3
	749 R / Dark	04 -	2	1033	C60	2827	RX3
	796 Hypermotard	10 -	2	2539	C60	2827	RX3

DUCATI

	821 Hypermotard	13 -	2	1232	C60	2827	RX3
	821 Hypermotard SP	13 -	2	1232	C60	2827	RX3
	848	08 -	2	2539	C60	2827	RX3
	848 Evo	11 -	2	1185	C60	2827	RX3
	899 Panigale	13 -	2	1232	C60	2827	RX3
	916 Biposto	95 - 97	2	2247	C60	2249	RX3
	916 SP / Strada / Senna	94 - 97	2	2247	C60	2249	RX3
	916 SPS	97 - 98	2	2539	C60	2249	RX3
	959 Panigale / Corse	16 -	2	1232	C60	2827	RX3
	996 R	01	2	1033	C60	2249	RX3
	996 SPS	99 - 01	2	2539	C60	2249	RX3
	998 / S	02 - 03	2	2539	C60	2249	RX3
	998 R	02	2	1033	C60	2249	RX3
	999 / S / R	03 -	2	1033	C60	2827	RX3
	999 RS	04 -	2	1033	C60	2984	RX3
	999 R Xerox	06 -	2	1033	C60	2827	RX3
	1098 / S	07 - 08	2	1185	C60	2827	RX3
	1098 R	08	2	1185	C60	2827	RX3
	1098 R Bayliss LE	09	2	1185	C60	2827	RX3
	1098 S	07 - 08	2	1185	C60	2827	RX3
	1100 Hypermotard	07 -	2	2539	C60	2827	RX3
	1100 Hypermotard Evo / SP	10 -	2	1185	C60	2827	RX3
	1103 Panigale V4 / S / Special	18 -	2	1185	C60	2827	RX3
	1198 / S	09 -	2	1185	C60	2827	RX3
	1199 Panigale / S / R / Senna	12 - 14	2	1185	C60	2827	RX3
	1199 Superleggera	14	2	1185	C60	2827	RX3
	1299 Panigale / S / R	15 -	2	1185	C60	2827	RX3
	1299 Panigale R FE	18 -	2	1185	C60	2827	RX3

HONDA

RS	125 R	91 - 94	1	2256	C60	2287	RX3
RS	125 R	95 -	1	1157	C60	2287	RX3
RS	250 R	91 - 92	2	2245	C60	2298	RX3
RS	250 R	93 -	2	1157	C60	2287	RX3
CBR	600 F Hurricane	87 - 90	2	2252	C60	2289	RX3
CBR	600 F2 / F2 Supersport	91 - 94	2	2252	C60	2296	RX3
CBR	600 F3	95 - 98	2	2256	C60	2296	RX3
CBR	600 F4 / F4 Sport	99 - 00	2	2711	C60	2296	RX3
CBR	600 F4i / F4i Sport	01 - 10	2	2711	C60	2296	RX3
CBR	600 F	11 -	2	2256	C60	1174	RX3
CBR	600 RR	03 - 04	2	2711	C60	2296	RX3
CBR	600 RR (Rad.cal)	05 - 06	2	1134	C60	2296	RX3
CBR	600 RR (Rad.cal)	07 -	2	1134	C60	1174	RX3
CBR	600 RR (Rad.cal) - ABS	09 -	2	1134	C60	1174	RX3
CBR	900 RR Fireblade	92 - 97	2	2245	C60	2296	RX3
CBR	900 RR Fireblade	98 - 99	2	2711	C60	2296	RX3
CBR	900 RR Fireblade (929)	00 - 01	2	2711	C60	2296	RX3
CBR	900 RR Fireblade (954)	02 - 03	2	2711	C60	2296	RX3
CBR	1000 RR Fireblade	04 - 05	2	1134	C60	2296	RX3
CBR	1000 RR Fireblade (Rad.cal)	06 - 07	2	1134	C60	1174	RX3
CBR	1000 RR Fireblade (Rad.cal)	08 - 13	2	1134	C60	1174	RX3
CBR	1000 RR Fireblade (Rad.cal) (C-ABS)	09 - 13	2	1134	C60	1174	RX3
CBR	1000 RR Fireblade (Rad.cal) (C-ABS)	14 - 16	2	1134	C60	1174	RX3
CBR	1000 RR SP (Brembo)	14 - 16	2	1185	C60	1174	RX3
CBR	1000 RR Fireblade (Rad.cal) (C-ABS)	17 -	2	1252	C60	1174	RX3
CBR	1000 RR Fireblade SP / SP2	17 -	2	1185	C60	1174	RX3
VTR	1000 SP-1	00 - 01	2	2711	C60	2296	RX3
VTR	1000 SP-2	02 - 07	2	2711	C60	2296	RX3

HUSQVARNA

SM	450 R	05	1	1033	C60	2353	RX3
SM	450 R / RR	06 - 08	1	1033	C60	1108	RX3
SM	450 R / RR	09 -	1	1033	C60	1108	RX3
SM	510 R	06	1	1033	C60	1108	RX3
SM	510 R	05	1	2247	C60	2353	RX3
SMR	511	11 -	1	1033	C60	1108	RX3
SM	570 R	06	1	2247	C60	1108	RX3
SM	630	10 -	1	1033	C60	1108	RX3
SMR	630	04 - 05	1	2247	C60	2353	RX3
SMR	630	06	1	2247	C60	1108	RX3

KAWASAKI

ZX6-R	600 D1-D4	90 - 93	2	2251	C60	2304	RX3
ZX6-R	600 E1-E5 Ninja	93 - 97	2	2251	C60	2381	RX3
ZX6-R	600 Ninja F1 / F2	95 - 97	2	2251	C60	2381	RX3
ZX6-R	600 Ninja (ZX600G)	98 - 02	2	2255	C60	2381	RX3
ZX6-R	600 Ninja (Rad.cal)	09 -	2	1177	C60	2381	RX3
ZX6-RR	600 Ninja (Rad.cal)	03 - 06	2	1110	C60	2381	RX3
ZX6-R	636 Ninja	02	2	2255	C60	2381	RX3
ZX6-R	636 Ninja (Rad.cal)	03 - 06	2	1110	C60	2381	RX3

1 - 2 = Nombre de jeux avant / Number of front sets / Anzahl Sets / Numero blister / Numero des juegos
L = Gauche / Left / Links / Sinistra / Izquierda
R = Droite / Right / Rechts / Destra / Derecha
NA = Non attribué / Not Available / Nicht verfügbar / Non disponible / No disponible

= Racing

Racing

KAWASAKI

ZX6-R	636	Ninja (Rad.cal)	13 -			NA		1174	RX3
ER-6	650	F	06 -	1	L	2383	C60	2381	RX3
ER-6	650	F	06 -	1	R	2384	C60		
ER-6	650		06 -	1	L	2383	C60	2381	RX3
ER-6	650		06 -	1	R	2384	C60		
ZX7-R	750	Ninja	89 - 95	2		2251	C60	2282	RX3
ZX7-R	750	Ninja	96 - 02	2		2255	C60	2282	RX3
ZX7-RR	750	Ninja	96 - 02	2		2899	C60	2813	RX3
ZXR	750	R	89 - 92	2		2251	C60	2282	RX3
ZXR	750	R	93 - 95	2		2251	C60	2282	RX3
ZX9-R	900	Ninja	94 - 95	2		2251	C60	2381	RX3
ZX9-R	900	Ninja / C Ninja	96 - 01	2		2255	C60	2381	RX3
ZX9-R	900	Ninja	02 - 03	2		1083	C60	2381	RX3
	1000	H2 Ninja / H2R Ninja	15 -	2		1185	C60	2827	RX3
ZX10-R	1000	Ninja (Rad.cal)	04 - 07	2		1110	C60	2381	RX3
ZX10-R	1000	Ninja (Rad.cal)	08 - 10	2		1133	C60	2381	RX3
ZX10-R	1000	Ninja (Rad.cal)	11 -	2		1133	C60	1174	RX3

KTM

	690	Duke (ABS)	12 -	1		2539	C60	2353	RX3
	690	Duke R	10 - 11	1		1033	C60	2353	RX3
	690	SMC	08 -	1		1033	C60	2353	RX3
	690	SMR	07 - 09	1		1033	C60	2353	RX3
	950	SMR	07	2		1033	C60	2352	RX3
	990	Super Duke R	09 -	2		1033	C60	2353	RX3
	990	Supermoto R / SM-R	08 - 09	2		1033	C60	2352	RX3
	990	Supermoto R / SM-R	10 - 13	2		1185	C60	2352	RX3
	990	Super moto T	09 -	2		1033	C60	2352	RX3
RC-8	1190		08 -	2		1185	C60	2827	RX3
RC8	1190	R	09 -	2		1185	C60	2827	RX3
	1290	Super Duke R	14 -	2		1185	C60	2827	RX3

MV AGUSTA

F3	675	Brutale B3	12 -	2		2539	C60	2827	RX3
	675	F3	12 -	2		2539	C60	2827	RX3
	675	F3 Oro	12-	2		1185	C60	2827	RX3
	675	F3 RC	16 -	2		1185	C60	2827	RX3
	750	Brutale (All models) (Nissin)	03 - 08	2		2899	C60	1203	RX3
	750	F4 (All models) (Nissin)	99 - 03	2		2899	C60	1203	RX3
	800	F3 RC	16 -	2		1185	C60	1203	RX3
	910	Brutale S (Nissin)	05 - 08	2		2899	C60	1203	RX3
	910	Brutale R (Brembo)	05 - 08	2		1033	C60	1203	RX3
	989	Brutale R	08 - 09	2		2539	C60	1203	RX3
	920	Brutale	11 -	2		2539	C60	1203	RX3
	990	Brutale R	10 -	2		2539	C60	1203	RX3
	1000	F4 (All models) (Nissin)	04 - 06	2		2899	C60	1203	RX3
	1000	F4 Senna	06	2		1033	C60	1203	RX3
	1000	F4 R (Brembo)	06 - 07	2		1033	C60	1203	RX3
	1000	F4	10 -	2		1185	C60	1203	RX3
	1000	F4 R Corsa Corta	12-	2		1185	C60	1203	RX3
	1000	F4 RR 312 (Brembo)	07	2		1033	C60	1203	RX3
	1000	F4 RR Corsa Corta	12-	2		1185	C60	1203	RX3
	1078	Brutale RR	08 - 09	2		1185	C60	1203	RX3
	1078	F4 RR 312 (Brembo)	08 -	2		1185	C60	1203	RX3
	1090	Brutale RR	10 -	2		1185	C60	1203	RX3
	1090	Brutale R	12-	2		2539	C60	1203	RX3
	1090	Brutale RR	12 -	2		1185	C60	1203	RX3

SUZUKI

GSX-R	600		93 - 96	2		2246	C60	2282	RX3
GSX-R	600	V/W/X/Y/K1/K2/K3	97 - 03	2		2251	C60	2282	RX3
GSX-R	600	K4 / K5 (Rad.cal)	04 - 05	2		1133	C60	2813	RX3
GSX-R	600	K6 / K7 (Rad.cal)	06 - 07	2		1133	C60	1163	RX3
GSX-R	600	K8 / K9 / L0 (Rad.cal)	08 -	2		1133	C60	1163	RX3
GSX-R	600	(Brembo Rad.cal)	11 -	2		1185	C60	1174	RX3
GSX-R	750	RG	86	2		2246	C60	2282	RX3
GSX-R	750	J / K / L / M / WN / WP	88 - 93	2		2246	C60	2282	RX3
GSX-R	750	WR / WS	94 - 95	2		2255	C60	2282	RX3
GSX-R	750	T / V / W / X	96 - 99	2		2255	C60	2282	RX3
GSX-R	750	Y / K1 / K2 / K3	00 - 03	2		2251	C60	2282	RX3
GSX-R	750	K4 / K5 (Rad.cal)	04 - 05	2		1133	C60	2813	RX3
GSX-R	750	K6 / K7 (Rad.cal)	06 - 07	2		1133	C60	1163	RX3
GSX-R	750	K8 / K9 / L0 (Rad.cal)	08 -	2		1133	C60	1163	RX3
GSX-R	750	(Brembo Rad.cal)	11 -	2		1185	C60	1174	RX3
GSX-R	1000	K1 / K2	01 - 02	2		2255	C60	2813	RX3
GSX-R	1000	K3 (Rad.cal)	03	2		1110	C60	2813	RX3
GSX-R	1000	K4 (Rad.cal)	04	2		1133	C60	2813	RX3
GSX-R	1000	K5 / K6 (Rad.cal)	05 - 06	2		1133	C60	2813	RX3
GSX-R	1000	K7 / K8 (Rad.cal)	07 - 08	2		1133	C60	1163	RX3
GSX-R	1000	K9 / L0 (Rad.cal)	09 -	2		1133	C60	1174	RX3

SUZUKI

GSX-R	1000	L2 (Brembo Rad.cal)	12 -	2		1185	C60	1174	RX3
GSX-R	1000	R / R Origins	18 -	2		1185	C60	1174	RX3
SV	1000	S / N K3-K7	03 - 07	2		2251	C60	2296	RX3
TL	1000	S	97 - 01	2		2251	C60	2282	RX3
TL	1000	R	98 - 02	2		2255	C60	2282	RX3

TRIUMPH

	675	Daytona (Rad.cal)	06 - 08	2		1083	C60	2298	RX3
	675	Daytona (Rad.cal)	09 -	2		1209	C60	2298	RX3
	675	Daytona R (Brembo Rad.cal)	11 - 12	2		1185	C60	2298	RX3
	675	Daytona R (Brembo Rad.cal)	13 - 16	2		1185	C60	2353	RX3
	1050	Speed Triple (Nissin Rad.cal)	05 - 07	2		1083	C60	2288	RX3
	1050	Speed Triple (Brembo Rad.cal)	08 -	2		1033	C60	2288	RX3
	1050	Speed Triple R (Brembo Rad.cal)	12 -	2		1185	C60	2288	RX3

YAMAHA

YZF	600	R6	99 - 02	2		2361	C60	2828	RX3
YZF	600	R6	03 - 05	2		2361	C60	2296	RX3
YZF	600	R6	06 - 09	2		2361	C60	2296	RX3
YZF	600	R6	10 -	2		2361	C60	2296	RX3
FZR	750	R (OW01)	89 - 90	2		2246	C60	2283	RX3
YZF	750	R7 (OW02)	99 - 01	2		2361	C60	2713	RX3
YZF	750	R7 (OW02) "Race Kit"	99 - 01	2		2899	C60	NA	
TRX	850		96 - 99	2		2305	C60	2283	RX3
YZF	1000	R1	98 - 01	2		2361	C60	2713	RX3
YZF	1000	R1	02 - 03	2		2361	C60	2828	RX3
YZF	1000	R1 / R1 SP	04 - 06	2		2361	C60	2296	RX3
YZF	1000	R1 (Rad.cal)	07 - 08	2		1180	C60	2296	RX3
YZF	1000	R1 (Rad.cal)	09 -	2		1180	C60	2296	RX3
YZF	1000	R1 / R1 M	15 -	2		2361	C60	1174	RX3

1 - 2 = Nombre de jeux avant / Number of front sets / Anzahl Sets / Numero blister / Numero des juegos
L = Gauche / Left / Links / Sinistra / Izquierda
R = Droite / Right / Rechts / Destra / Derecha
NA = Non attribué / Not Available / Nicht verfügbar / Non disponible / No disponible

= Racing

Étriers / Calipers / Steibügel / Pinza freno / Pinza de freno

			Route Road	Sport		
AP RACING						
6 Piston caliper (Road / Racing)	1	**2720**		XBK5	C60	
CP 2868 caliper (Road / Racing)	1	**2950**		XBK5	C60	
CP 4226 Rear caliper (Racing)	1	**2922**				RX3
BERINGER						
2 Piston caliper (Road)	1	**2307**	A3+	XBK5		
4 Piston caliper (Road / Racing)	1	**2251**	A3+	XBK5	C60	
6 Piston caliper (Road / Racing)	1	**2404**	A3+	XBK5	C60	
6 Piston caliper (Road)	3	**2307**	A3+	XBK5		
BILLET						
6 Piston caliper (Road / Racing)	3	**2249**	A3+	XBK5	C60	
BREMBO						
P 30 A (Road)	1	**2307**	A3+	XBK5		
P 32 A (Road)	2	**2377**	A3+			
P32x36 Monobloc caliper (Racing)	1	**2329**		XBK5	C60	
P4 30x30 Double pin (Road / Racing)	1	**2539**	A3+	XBK5	C60	
P4 34x30 Single pin (Road / Racing)	1	**2247**	A3+	XBK5	C60	
P4 34x34 Gold (Road / Racing)	1	**1033**	A3+	XBK5	C60	
P4 34x34 Radial caliper (Road / Racing)	1	**1033**	A3+	XBK5	C60	
P4 Radial 2 Pieces caliper (Racing)	1	**2329**		XBK5	C60	
P4 Radial Monobloc caliper (Racing)	1	**2329**		XBK5	C60	
HPK P4 34/30 Radial caliper (Racing)	1	**2539**	A3+	XBK5	C60	
XB0 P1 / P4 30/34 108mm Radial caliper (Racing)	1	**1251**	A3+	XBK5	C60	
ISR						
2 Piston caliper (22-027/028/029) (Road / Racing)	2	**2249**	A3+	XBK5	C60	
NISSIN						
4 Piston caliper (Road / Racing)	1	**2246**	A3+	XBK5	C60	
4 Piston Radial caliper (Road / Racing)	1	**1083**	A3+	XBK5	C60	
6 Piston caliper (Road / Racing)	1	**2404**	A3+	XBK5	C60	
6 Piston caliper (Road / Racing)	1	**2899**	A3+	XBK5	C60	
PERFORMANCE MACHINE						
caliper 112x6 QC = 0051-2901/2902 (Road)	1	**2899**	A3+	XBK5	C60	
caliper 125x2 = 0052-2100 (Road)	1	**2377**	A3+			
caliper 125x4S = 0052-2200 (Road)	2	**2377**	A3+			
caliper 125x4SL = 0052-2300 (Road)	2	**2377**	A3+			
caliper 125x6 (Road)	1	**2369**	A3+			
caliper 137x6 (Road)	1	**2369**	A3+			
PVM						
6 Piston caliper (Racing)	1	**2584**		XBK5	C60	
Radial caliper (Racing)	2	**1075**			C60	
SPIEGLER						
4 Piston caliper (Road / Racing)	1	**2920**		XBK5	C60	
8 Piston caliper (Road / Racing)	1	**2586**		XBK5	C60	
8 Piston caliper (Road / Racing)	1	**2919**		XBK5	C60	
YCF						
YCF Radial Aftermarket	1	**1243**	MX			

1 - 2 - 4 = Nombre de jeux / Number of sets / Anzahl Sets / Numero blister / Numero des juegos
L = Gauche / Left / Links / Sinistra / Izquierda
R = Droite / Right / Rechts / Destra / Derecha
NA = Non attribué / Not Available / Nicht verfügbar / Non disponible / No disponible

= Racing

Tout-terrain
Off-road

AJP

PR3	125	Enduro	08 -	1146	EN10	NA	
MX	200		09 -	1146	MX10	2377	X59
PR3	200	Enduro	08 -	1146	EN10	NA	
PR5	250	Enduro	09 -	2300	EN10	2314	X59

ALFER

MC	80		87 -	2249	MX10	2377	X59
MC	125		88	2398	MX10	2249	X59
	125	Enduro	97 -	2288	EN10	2299	X59
MC	125		87	2249	MX10	T	
VRE	125		00 -	2352	EN10	2353	X59
MC	250		85	2249	MX10	T	
MC	250		87	2249	MX10	2249	X59
MC	250		88	2398	MX10	2249	X59
VR	250	All models	99 -	2352	EN10	2353	X59
GR	250	Enduro	85	2249	EN10	T	
	250	Enduro	97 -	2288	EN10	2299	X59
GR	250	Enduro	88	2398	EN10	2249	X59
GR	300	Enduro	88	2398	EN10	2249	X59
GR	300		85	2249	EN10	T	

APRILIA

	125	AF1 Replica	88 - 88	2400	EN10	T	
RX	125		90 - 96	2400	EN10	2306	X59
RX	125		97 -	2352	EN10	2306	X59
	125	Tuareg Wind	89 - 89	2400	EN10	T	
	200	Climber	93	2249	EN10	2249	X59
	240	Climber	89 - 90	2260	EN10	1089	X59
TX	240		86 -	2377	EN10	T	
MX	250	Cross	85	2249	MX10	T	
RX	250		86 -	2249	EN10	T	
	275	Climber	89 - 90	2260	EN10	1089	X59
	280	Climber / R	92	2377	EN10	2377	X59
TX	311		86	2377	EN10	T	
TX	312	M	88	2377	EN10	2377	X59
TXR	312	M	88	2377	EN10	2377	X59
	350	Tuareg Wind	89 - 89	2400	EN10	T	
MXV	450		09 -	2300	MX10	1076	X59
RXV	450	Enduro	06 -	2300	EN10	1103	X59
RXV	550	Enduro	06 -	2300	EN10	1103	X59

ARMSTRONG

MX	500		86 -	2249	MX10	T	
MX	600		86 -	2249	MX10	T	

ATK

ATK	250	CC / MX	91 - 92	2398	MX10	2249	X59
ATK	350	ES / CC / MX / STD	91 - 92	2398	MX10	2249	X59
ATK	350	GS	93 -	2249	MX10	2249	X59
ATK	406	CC / MX	91 - 92	2398	MX10	2249	X59
ATK	560		86	2249	MX10	T	
ATK	560		84 - 85	2249	MX10	T	
ATK	560		87 - 88	2249	MX10	2377	X59
ATK	560		89 - 91	2398	MX10	2260	X59
ATK	604	ES / CC / MX / STD	91 - 92	2398	MX10	2249	X59
ATK	604	Quadracer	90 -	2398	MX10	2260	X59
ATK	604		91 -	2398	MX10	2260	X59
ATK	640		93 -	2249	MX10	2249	X59
ATK	250	LQ	95	2288	MX10	NA	
	350	CC	94 - 95	2288	MX10	NA	
	350	DS	94 - 96	2288	MX10	NA	
	406	CC	94 - 95	2288	MX10	NA	
	605	CC	94 - 96	2288	MX10	NA	
	605	DS	94 - 96	2288	MX10	NA	

BENELLI

BX	449	Cross	07 -	2352	MX10	2353	X59
	505	Enduro	08 -	2352	MX10	2353	X59

BETA

MX	50	Enduro	92	2260	EN10	NA	
	50	Rev	00 -	2377	EN10	2377	X59
	50	Super Trial	92	2377	EN10	NA	
KR	50	Twin	88	2249	EN10	2249	X59
ALP	50		91 -	NA		2260	X59
KR	50		86 - 87	2249	EN10	NA	
ST	50		97 -	2377	EN10	2377	X59

BETA

RR	50	Enduro	04 - 07	1146	EN10	1244	X59
RR	50	Enduro	08 - 12	1146	EN10	1103	X59
	80	Rev	00 -	2377	EN10	2377	X59
	80	Evo Junior	10 -	2377	EN10	2377	X59
SR	125	34	89	2377	EN10	NA	
TR	125	34	88	2377	EN10	2260	X59
TR	125	34 / 35	89 - 90	2377	EN10	2377	X59
TR	125	34	92 -	2601	MX10	NA	
ALP	125	(4T)	00 - 05	2377	EN10	2377	X59
ALP	125	(4T)	06 -	1146	EN10	NA	
RR	125	Enduro	06 -	1146	EN10	NA	
TRIAL	125		97 -	2377	EN10	NA	
ALP	200	(4T)	00 - 05	2377	EN10	2377	X59
ALP	200	(4T)	06 -	1146	EN10	NA	
ALP	240		96 -	2377	EN10	2249	X59
	240	Super Trial	92 -	2377	EN10	NA	
ALP	240		92	2377	EN10	NA	
RR	250	Enduro	05 -	2300	EN10	1103	X59
	250	Techno	96 - 98	2377	EN10	2377	X59
	250	Techno	99 -	2377	EN10	2377	X59
	250	Zéro	91 -	2377	EN10	NA	
TR	250	36	92 -	2601	MX10	NA	
ALP	250		92	2377	EN10	NA	
ALP	250		97 -	2377	EN10	2377	X59
CR	250		83 -	2249	MX10	NA	
TR	260	34	86 - 88	NA		2260	X59
ALP	260		96 -	2377	EN10	2249	X59
	260	Zéro	91 -	2377	EN10	NA	
TR	260	Zéro / 34 / 35	89 - 92	2377	EN10	NA	
TR	300	Crosstrainer	15 -	2300	MX10	1103	X59
RR	300		13 -	2300	EN10	1103	X59
ALP	350	4.0	04 - 05	1146	EN10	1089	X59
ALP	350	4.0	06 -	1146	EN10	NA	
RR	350	Enduro	12 - 14	2300	EN10	1103	X59
RR	350	Efi / Efi Racing	15 -	2300	EN10	1103	X59
RR	390		15 -	2300	EN10	1103	X59
RR	400	Enduro	05 -	2300	EN10	1103	X59
RR	430		15 -	2300	EN10	1103	X59
RR	430	Racing	15 -	2300	EN10	1103	X59
RR	450	Enduro	05 -	2300	EN10	1103	X59
RR	480		15 -	2300	EN10	1103	X59
RR	480	Racing	15 -	2300	EN10	1103	X59
RR	498	Enduro	12 -	2300	EN10	1103	X59
	500	GS / RV	84 -	2249	EN10	NA	
RR	525	Enduro	05 -	2300	EN10	1103	X59

BMW

G	450	Enduro	08 -	2352	EN10	1108	X59

CAGIVA

	125	Cross	86 -	2400	MX10	2306	X59
	125	Cruiser	87 - 89	2400	MX10	NA	
	125	Enduro	86 -	2249	EN10	T	
	125	Freccia C9	87	2400	MX10	NA	
W8	125		84 -	2400	EN10	1089	X59
W8	125	/ R	94 -	2400	EN10	1089	X59
WMX	125	GP Replica	86 -	2249	MX10	T	
WMX	125		89 - 90	2400	MX10	2306	X59
WMX	125		88	2400	MX10	T	
WRX	125		83	2249	MX10	T	
	250	Cross	86 -	2400	MX10	T	
WMX	250	GP	82	2249	MX10	T	
MXR	250		82 -	2249	MX10	T	
WMX	250		89 - 90	2400	MX10	2306	X59
WMX	250		88 -	2400	MX10	T	
WMX	500	Cross	87	2249	MX10	2249	X59
WMX	500		85 - 86	2249	MX10	T	

CANNONDALE

MX	400		00 -	2300	MX10	2299	X59
	440	C / E / X	03 -	2300	MX10	2299	X59

CCM

MX	450		08 -	2352	MX10	2353	X59

DB MOTORS

ZZ	50	Pirat	00 -	2249	MX10	2249	X59

T = Tambour / Mechanical drum / Strommel / Tamburo / Tambor

DERBI

	50	Sport	00 -	2249	MX10	2249	X59
	125	Senda R (4T)	04 -	1146	EN10	2377	X59

FACTORY

R12	50	Phantom Agua	06 -	NA		2377	X59
R14	50	Phantom Agua	04 -	NA		2377	X59
R14	50	Phantom Aire	03 -	2377	MX10	NA	
YR	125		06 -	NA		2377	X59
YR	250		99 -	2352	MX10	2353	X59

FANTIC

MX	50	Regolarna Competizione	08 -	2300	EN10	2314	X59
XM	50	Caballero	98 -	2249	EN10	2249	X59
RS	50	Caballero	91 -	2249	EN10	2249	X59
RC	50	Caballero	91 -	2249	EN10	2249	X59
	50	Clubman		2377	EN10	2377	X59
	50	Oasis	90 -	2260	EN10	1089	X59
	50	Regolarna Competizione	08 -	2300	EN10	2314	X59
	50	Trial .5 .7 .9	89 -	2377	EN10	2377	X59
MX	65	Regolarna Competizione	08 -	2300	EN10	2314	X59
	75	Oasis	89 -	2260	EN10	1089	X59
	80	Clubman		2377	EN10	2377	X59
	80	Regolarna Competizione	08 -	2300	EN10	2314	X59
MX	85	Regolarna Competizione	08 -	2300	EN10	2314	X59
	125	Clubman		2377	EN10	2377	X59
	125	Regolarna Competizione	08 -	2300	EN10	2314	X59
	250	C@sta	98 -	2377	EN10	2377	X59
	250	Clubman		2377	EN10	2377	X59
	250	Coach	91 -	2249	EN10	2377	X59
	250	K Roo	93 -	2377	EN10	2377	X59
	250	Section	96 -	2377	EN10	2377	X59
	305	Trial	89	2377	EN10	2377	X59
	307	Trial	91 -	2377	EN10	2377	X59

GAS GAS

TXT	50	Boy	04 -	2377	EN10	2377	X59
	125	Enducross	93 - 96	2352	EN10	2353	X59
	125	Delta	91 -	2377	EN10	NA	
	125	Trial	91 -	2377	EN10	NA	
	125	Pampera	04 -	1146	EN10	NA	
	125	Pampera	97 - 03	2377	EN10	2377	X59
JT	125	R	96	2377	EN10	2377	X59
JT	125	X	97 -	2377	EN10	2377	X59
EC	125		00 -	2300	EN10	2314	X59
EC	125		97 - 99	2352	EN10	2353	X59
MC	125		03 -	2300	MX10	2314	X59
TXT	125	(Formula front caliper/single pin pad)	12	1228	MX10	NA	
JT	160	R	96	2377	EN10	2377	X59
EC	200	Hobby	07 -	2300	EN10	2314	X59
EC	200		00 -	2300	EN10	2314	X59
EC	200		99	2352	EN10	2353	X59
	200	Pampera	99 -	2377	EN10	2377	X59
TX	200		97 -	2377	EN10	2377	X59
EC	250	FSE	02 -	2300	EN10	2314	X59
JT	250	Contact	93 - 94	2377	EN10	2377	X59
	250	Pampera	03 -	1146	EN10	NA	
	250	Pampera	96 - 02	2377	EN10	2377	X59
JT	250	R Tarres Replica	96	2377	EN10	2377	X59
JT	250	X	97 -	2377	EN10	2377	X59
EC	250		00 -	2300	EN10	2314	X59
EC	250		97 - 99	2352	EN10	2353	X59
MC	250		00 -	2300	MX10	2314	X59
MC	250		97 - 99	2352	MX10	2353	X59
TXT	250	Trial	89 -	2377	EN10	2377	X59
TXT	250	(Formula front caliper/single pin pad)	12	1228	MX10	NA	
JT	270	X	97 -	2377	EN10	2377	X59
TX	270	Contact	97 -	2377	EN10	2377	X59
	280	Pampera	04 -	1146	EN10	NA	
TXT	280	(Formula front caliper/single pin pad)	12	1228	MX10	NA	
EC	300		00 -	2300	EN10	2314	X59
EC	300		99	2352	EN10	2353	X59
TXT	300	(Formula front caliper/single pin pad)	12	1228	MX10	NA	
JT	320	X	97 -	2377	EN10	2377	X59
TX	320	Contact	97 -	2377	EN10	2377	X59
	325	Halley PXC		2377	EN10	2377	X59
	327	Trial		2377	EN10	2377	X59
	327	Contact		2377	EN10	2377	X59
	370	Pampera	96 -	2377	EN10	2377	X59
	370	Pampera	98 -	2377	EN10	2377	X59
JT	370	R 37	96	2377	EN10	2377	X59

GAS GAS

EC	400	FSE	02 -	2300	EN10	2314	X59
	400	Pampera	06	2300	EN10	2314	X59
EC	450	FSE / FSR	03 - 09	2300	EN10	2314	X59
EC	450	F (4T)	13 - 14	2300	EN10	1103	X59
EC	450	Raid (4T)	14 -	2300	EN10	1103	X59
	450	Pampera	07 - 08	2300	EN10	2314	X59
EC	500	FSE Enduro	06 -	2300	EN10	2314	X59
EC	515	FSR	08 -	2300	EN10	2314	X59

HIGHLAND

	450	MX	06 -	2352	MX10	2353	X59

HM

CRE	125	R Enduro	95 - 01	2300	EN10	2314	X59
CRE	125	Enduro	02 - 07	2300	EN10	1076	X59
CRE	125	F / X	09	1146	EN10	2314	X59
CRF	230	Enduro / Trial	04 - 07	2300	EN10	1076	X59
CRE	250	R Enduro	02 - 07	2300	EN10	1076	X59
CRF	250	F	04 - 08	2300	EN10	1076	X59
CRE	450	F	02	2300	EN10	1076	X59
CRE	450	R Enduro	02 - 07	2300	EN10	1076	X59
CRE	450	F / X	04 - 07	2300	EN10	1076	X59
CRF	450	R Enduro	04 - 08	2300	EN10	1076	X59
CRF	450	R	04 - 08	2300	EN10	1076	X59
CRE	490	X	07	2300	EN10	1076	X59

HONDA

CR	80	R	86 - 91	2328	MX10	T	
CR	80	R / RB	92 - 02	2328	MX10	2314	X59
CRM	80		89 -	2328	MX10	2314	X59
CR	85	R / R Expert	03 -	2328	MX10	2314	X59
CR	125	RE / RF	84 - 85	2451	MX10	T	
CR	125	RG	86	2451	MX10	T	
CR	125	RH / RJ / RK	87 - 94	2302	MX10	2314	X59
CR	125	R	95 - 01	2300	MX10	2314	X59
CR	125	R	02 -	2300	MX10	1076	X59
CRE	125		02 -	2300	EN10	1076	X59
CRF	230		04 -	2300	MX10	T	
CR	250	RE / RF	84 - 85	2451	MX10	T	
CR	250	RG	86	2451	MX10	T	
CR	250	/ R	87 - 94	2302	MX10	2314	X59
CR	250	R	95 - 01	2300	MX10	2314	X59
CR	250	R	02 -	2300	MX10	1076	X59
CRE	250		02 - 03	2300	EN10	1076	X59
CRE	250	F	04 -	2300	EN10	1076	X59
CRF	250	R	04 - 09	2300	MX10	1076	X59
CRF	250	R Efi	10 -	2300	MX10	1076	X59
CRF	250	X	04 - 09	2300	MX10	1076	X59
XR	250	L	91 - 92	2302	MX10	2314	X59
XR	250	L	93 - 96	2300	EN10	2314	X59
XR	250	R	84 - 87	2451	MX10	T	
XR	250	R	88 - 89	2302	MX10	T	
XR	250	R	90 - 95	2302	MX10	2314	X59
XR	250	R	96 - 04	2300	EN10	2314	X59
ATC	300	X	86 -	2302	MX10	2328	X59
XR	350	R	84 - 85	2451	MX10	T	
XR	400	R	96 -	2300	EN10	2314	X59
XR	440	R	00 -	2300	EN10	2314	X59
CRE	450	F	02 -	2300	EN10	1076	X59
CRF	450	R	02 - 08	2300	MX10	1076	X59
CRF	450	R Efi	09 -	2300	MX10	1076	X59
CRF	450	X	05 -	2300	MX10	1076	X59
CR	500	RE / RF / RG	84 - 86	2451	MX10	T	
CR	500	R	87 - 94	2302	MX10	2314	X59
CR	500	R	95 - 01	2300	MX10	2314	X59
XR	500	R Pro Link	83 - 84	2451	MX10	T	
XR	500	R	86 -	2451	MX10	T	
XR	600	R	83 - 87	2451	MX10	T	
XR	600	R	88 - 90	2302	MX10	T	
XR	600	R	91 - 92	2302	MX10	2314	X59
XR	600	R	93 - 00	2300	EN10	2314	X59
XR	650	L	93 -	2300	EN10	2314	X59
XR	650	R	00 -	2300	EN10	2314	X59

HRD

	125	GSE	96	2288	EN10	2299	X59

T = Tambour / Mechanical drum / Strommel / Tamburo / Tambor

HUSABERG

	250	GSE	96	2288	EN10	2299	X59
TE	125	(2T)	12 -	2352	EN10	1108	X59
TE	250	(2T)	11 -	2352	EN10	1108	X59
TE	300	(2T)	11 -	2352	EN10	1108	X59
FE	250	(4T)	13 -	2352	EN10	1108	X59
FC	350		95 - 99	2352	EN10	2353	X59
FE	350	(4T)	13 -	2352	EN10	1108	X59
MC	350		91 - 93	NA		2306	X59
TE	350		91 - 93	2400	EN10	NA	
FE	390		10 - 12	2352	EN10	1108	X59
FC	400		99 - 02	2352	EN10	2353	X59
FE	400	S - E	98 - 03	2352	EN10	2353	X59
FC	450		98 - 03	2352	EN10	2353	X59
FE	450	4	06 - 08	2352	EN10	2353	X59
FE	450		09 - 13	2352	EN10	1108	X59
FX	450		03 -	2352	EN10	2353	X59
FX	450		10 - 11	2352	MX10	1108	X59
FC	470	E	01 - 02	2352	EN10	2353	X59
FX	470	E	01 - 02	2352	EN10	2353	X59
	500	All models	91 -	NA		2306	X59
FC	501		98 - 01	2352	EN10	2353	X59
FE	501	S - E	98 - 04	2352	EN10	2353	X59
FE	501	(4T)	13 -	2352	EN10	1108	X59
FC	550		01 -	2352	EN10	2353	X59
FE	550	E	06 - 08	2352	EN10	2353	X59
FE	570		09 - 12	2352	EN10	1108	X59
FE	650	E	06 - 08	2352	EN10	2353	X59

HUSQVARNA

	50	Husky Boy	01 -	2377	MX10	T	
CR	50	Pro Senior	06 -	NA		1128	X59
CR	50	Senior	06 -	NA		1128	X59
WRS	50		98 -	2377	EN10	T	
CR	65		12 -	1078	MX10	1219	X59
TC	85	(2T)	14	1228	MX10	1219	X59
CR	125		05 -	2352	MX10	1108	X59
CR	125		91 - 95	2400	MX10	2306	X59
CR	125		96 - 04	2352	MX10	2353	X59
CR	125		85 - 90	2249	MX10	T	
CX	125		84 - 85	2249	MX10	T	
TC	125	(2T)	14 -	2352	MX10	1108	X59
TE	125	(4T)	11 - 13	2352	EN10	2353	X59
TE	125	(2T)	14 -	2352	EN10	1108	X59
WR	125		85 - 90	2400	EN10	T	
WR	125		90 - 91	2400	EN10	T	
WR	125		91 - 96	2400	EN10	2306	X59
WR	125		97 -	2352	EN10	2353	X59
WRE	125		96 -	2352	EN10	2353	X59
WRK	125		88	2400	EN10	T	
WRK	125		90	2400	EN10	2306	X59
CR	240		84 - 85	2249	MX10	T	
CR	240		86 - 87	2400	EN10	T	
WR	240		85 - 88	2400	EN10	T	
WR	240		87 - 90	2400	EN10	T	
WR	240		91 -	2400	EN10	2306	X59
WRK	240		90	2400	EN10	2306	X59
CR	250		85 - 87	2249	MX10	T	
CR	250		87 - 91	2400	MX10	T	
CR	250		91 - 96	2400	MX10	2306	X59
CR	250		97 - 04	2352	MX10	2353	X59
CR	250		05 -	2352	MX10	1108	X59
FC	250	(4T)	14 -	2352	MX10	1108	X59
FE	250	(2T)	14 -	2352	MX10	1108	X59
TC	250		04 -	2352	MX10	1108	X59
TC	250		02 - 03	2352	MX10	2353	X59
TC	250	(2T)	14 -	2352	MX10	1108	X59
TE	250	(4T)	02 - 05	2352	EN10	2353	X59
TE	250	(4T)	06 - 13	2352	EN10	1108	X59
TE	250	Meo Replica (4T)	11	2352	EN10	1108	X59
TE	250	R (4T)	13	2352	EN10	1108	X59
TE	250	(2T)	14 -	2352	EN10	1108	X59
WR	250		87 - 90	2400	EN10	T	
WR	250		90 - 96	2400	EN10	2306	X59
WR	250		97 -	2352	EN10	2353	X59
XC	250		- 85	2249	MX10	T	
XC	250		87 - 90	2400	MX10	T	
WR	260		90 -	2400	EN10	2306	X59
TC	300		14 -	2352	MX10	1108	X59
TE	300	(2T)	14 -	2352	EN10	1108	X59
WR	300	(2T)	09 - 13	2352	EN10	2353	X59
TE	310	(4T)	10 - 13	2352	EN10	1108	X59
TE	310	R (4T)	13	2352	EN10	1108	X59

HUSQVARNA

FC	350		14 -	2352	MX10	1108	X59
FE	350		14 -	2352	MX10	1108	X59
TE	350		90 - 91	2400	EN10	T	
TE	350		96 -	2352	EN10	2353	X59
TE	350	Enduro	90	2400	EN10	2306	X59
WR	360		97 -	2352	EN10	2353	X59
WR	360		96	2400	EN10	2306	X59
TE	400		01 -	2352	EN10	2353	X59
WR	400	Enduro	85 -	2249	EN10	T	
WR	400		86 - 87	2400	EN10	T	
WR	400		87 -	2400	EN10	T	
TE	410		97 -	2352	EN10	2353	X59
TE	410		96	2400	EN10	2306	X59
	430	Auto	87 -	2400	EN10	T	
	430	Enduro	85 -	2249	EN10	T	
CR	430		87 - 89	2400	MX10	T	
WR	430		87 -	2400	EN10	T	
XC	430		87 -	2400	MX10	T	
TC	449	(4T)	11 - 13	2352	EN10	1108	X59
TE	449	(4T)	11 - 13	2352	EN10	1108	X59
FE	450		14 -	2352	EN10	1108	X59
FC	450	(4T)	14 -	2352	EN10	1108	X59
TC	450		04 -	2352	MX10	1108	X59
TC	450		02 - 03	2352	MX10	2353	X59
TE	450		03 - 05	2352	EN10	2353	X59
TE	450		06 -	2352	EN10	1108	X59
CR	500		- 85	2249	MX10	T	
CR	500		86 -	2249	MX10	T	
XC	500		- 85	2249	MX10	T	
TC	500		86 -	2249	MX10	T	
XC	500		87 -	2400	MX10	T	
FE	501	(4T)	14 -	2352	EN10	1108	X59
WR	504		83 -	2249	EN10	T	
TC	510		87 - 90	2400	EN10	T	
TC	510		02 - 03	2352	MX10	2353	X59
TC	510		04 -	2352	MX10	1108	X59
TE	510		87 - 89	2400	MX10	T	
TE	510		90 -	2400	EN10	2306	X59
TE	510		86 - 87	2249	EN10	T	
TE	510		87 - 91	2249	EN10	T	
TE	510		02 - 03	2352	EN10	2353	X59
TE	510		04 - 05	2352	EN10	2353	X59
TE	510		06 -	2352	EN10	1108	X59
TE	511	(4T)	11 -	2352	EN10	1108	X59
TC	570		01 -	2352	EN10	2353	X59
TE	570		01 -	2352	EN10	2353	X59
TC	610		90 - 91	2400	EN10	T	
TC	610	Cross	91 - 96	2400	MX10	2306	X59
TC	610	Cross	97 -	2352	MX10	2353	X59
TE	610		90 - 91	2400	EN10	T	
TE	610		91 - 96	2400	EN10	2306	X59
TE	610		97 -	2352	EN10	2353	X59
TE	610	E	06	2352	EN10	2353	X59
TE	630		10 -	2352	EN10	2353	X59

JCM

	125	Europa	89	2377	EN10	2377	X59
	125	SR	89	2377	EN10	2377	X59
	240	Europa	89	2377	EN10	2377	X59
	240	SR	89	2377	EN10	2377	X59
	325	Europa	89	2377	EN10	1089	X59
	325	SR	89	2377	EN10	2377	X59

KAWASAKI

KMX	50		88 -	2469	MX10	T	
KX	65		00 -	1034	MX10	2408	X59
KX	80	E / G / H / J	84 - 87	2469	MX10	T	
KX	80	L / N / R-R6	88 - 96	2469	MX10	2328	X59
KD	80	N1 / N3	88 - 90	2469	MX10	T	
KMX	80		87 -	2469	MX10	T	
KX	80		97 - 00	2750	MX10	2328	X59
KX	85		01 -	2750	MX10	2328	X59
KX	100		88 - 92	2469	MX10	2328	X59
KX	100	B5 / B6	95 - 96	2469	MX10	2328	X59
KX	100	B7	97 -	2750	MX10	2328	X59
KDX	125	A / B	90 -	2469	MX10	2299	X59
KX	125	B1	82	2469	MX10	T	
KX	125	B2 / C1 / D1	83 - 85	2306	MX10	T	
KX	125	E1	86	2306	MX10	2306	X59
KX	125	E2 / F1	87 - 88	NA		2306	X59
KX	125	G / H / J	89 - 93	2288	MX10	2299	X59

T = Tambour / Mechanical drum / Strommel / Tamburo / Tambor

KAWASAKI

KX	125	K1	94	2300	MX10	2299	X59
KX	125		95 -	2300	MX10	2314	X59
KMX	125		86	2469	MX10	2306	X59
KMX	125		87 - 02	2469	MX10	2306	X59
KDX	200	C	86 - 88	2306	EN10	T	
KDX	200	SR / E1 / E4	89 - 92	2306	EN10	2299	X59
KDX	200	E5	93	2288	EN10	2299	X59
KDX	200	E6 / H1 / H2 / H3	94 - 99	2300	EN10	2299	X59
KDX	220	R A4	97 -	2300	EN10	2299	X59
KL	250	Super Sherpa	98 -	2750	MX10	2306	X59
KLX	250	D1-D4 / ES	93 - 96	2300	EN10	2299	X59
KX	250	B1	82	2469	MX10	T	
KX	250	C1 / C2 / D1	83 - 85	2306	MX10	T	
KX	250	D2	86	2306	MX10	2306	X59
KX	250	E1 / F1	87 - 88	NA		2306	X59
KX	250	G1 / H1 / H2 / J1 / J2	89 - 93	2288	MX10	2299	X59
KX	250	K1	94	2300	MX10	2299	X59
KX	250		95 -	2300	MX10	2314	X59
KDX	250	SR / D1 / D2 / D3 / D4	91 - 94	2288	EN10	2299	X59
KLX	250		98 - 07	2300	EN10	2314	X59
KX-F	250		04 - 10	2300	MX10	1103	X59
KX-F	250	DFI	11 -	2300	MX10	1103	X59
KLX	300	R A2	97 -	2300	EN10	2314	X59
KLR	350		85 -	2306	EN10	T	
KLX	400	R / SR	03 -	2300	EN10	2314	X59
KLX	450	R	07 -	2300	MX10	1103	X59
KX-F	450		06 - 08	2300	MX10	1103	X59
KX-F	450	DFI	09 -	2300	MX10	1103	X59
KX	500	A1 / A2 / B1	83 - 85	2306	MX10	T	
KX	500	B2	86	2306	MX10	2306	X59
KX	500	C1 / D1	87 - 88	NA		2306	X59
KX	500	E1 / E2 / E3 / E4 / E5	89 - 93	2288	MX10	2299	X59
KX	500	E6 / E7	94 - 95	2300	MX10	2299	X59
KX	500	E8 / E9	96 -	2300	MX10	2314	X59
KLX	650	R	93 - 95	2300	MX10	2299	X59
KLX	650	R D1	96	2300	MX10	2314	X59

KRAM-IT

ER	125		89 - 93	2400	EN10	2306	X59
GS	250		97 -	2352	EN10	2353	X59
MC	250		89	2400	MX10	2306	X59
MX	250		97 -	2352	MX10	2353	X59
ER	300		89	2400	EN10	2306	X59

KTM

		Freeride E-SX / E-XC (Electric)	12 -	1228	MX10	1219	X59
MX	50		91	2249	MX10	T	
SX	50	Pro Junior LC	02 -	1128	MX10	T	
SX	50	Pro Senior LC	02 - 03	1128	MX10	T	
SX	50	Pro Senior LC	04 -	1128	MX10	1128	X59
SX	50	Senior Adventure	04 -	1128	MX10	T	
GXE	50		87 -	2249	EN10	T	
GXE	50		89 -	2249	EN10	T	
GXR	50		89 -	2249	EN10	T	
MX	50		87 - 91	2249	MX10	T	
SM	50		06 -	1128	MX10	1128	X59
SX	60		99 -	2377	MX10	T	
SX	65		00 - 01	2377	MX10	1089	X59
SX	65		02 - 03	1078	MX10	1089	X59
SX	65		04 - 08	1078	MX10	1128	X59
SX	65		09 -	1078	MX10	1078	X59
MX	80		86 - 92	2249	MX10	T	
EXC	85		90	2399	EN10	2399	X59
MX	85		90	2249	MX10	T	
SX	85		03 - 10	1078	MX10	1078	X59
SX	85		11	1078	MX10	1219	X59
SX	85	CC	12 -	1228	MX10	1219	X59
	125	Baja	86 -	2249	MX10	T	
EXC	125		90	2399	EN10	2399	X59
EXC	125	Enduro	99 - 03	2352	EN10	2353	X59
EXC	125	Enduro	04 -	2352	EN10	1108	X59
GS	125		88	2399	EN10	2399	X59
GS	125		89 - 90	2306	EN10	2306	X59
GS	125		92 -	2352	EN10	2306	X59
LC	125		85	2249	EN10	T	
LC	125		86 -	2249	EN10	2249	X59
MX	125		85	2249	MX10	T	
MX	125		86	2249	MX10	2249	X59
MX	125		88	2399	MX10	2399	X59
MX	125		89 - 90	2306	MX10	2306	X59
MX	125		92 - 93	2352	MX10	2306	X59

KTM

MXC	125		92 - 93	2352	MX10	2306	X59
SX	125		96 - 03	2352	MX10	2353	X59
SX	125		04 -	2352	MX10	1108	X59
XC	125		85	2249	MX10	T	
XC	125		86 -	2249	MX10	2249	X59
SX	144		07 - 08	2352	MX10	1108	X59
SX	150		09 -	2352	MX10	1108	X59
EXC	200	Enduro	99 - 03	2352	EN10	2353	X59
EXC	200	Enduro	04 -	2352	EN10	1108	X59
SX	200		02	2352	MX10	2353	X59
SX	200		03 - 04	2352	MX10	1108	X59
	250	Baja	86 -	2249	EN10	T	
	250	Freeride R (2T)	14 -	1228	MX10	1219	X59
EXC	250		90	2399	EN10	2399	X59
EXC	250	(2T)	15 -	2352	EN10	1108	X59
EXC	250	Enduro / Enduro (4T)	99 - 03	2352	EN10	2353	X59
EXC	250	Enduro / Enduro (4T)	04 -	2352	EN10	1108	X59
EXC-F	250	Enduro (4T)	06 - 14	2352	EN10	1108	X59
MX	250	Enduro VC	87	2398	MX10	2398	X59
GS	250		88	2399	EN10	2399	X59
GS	250		89 - 90	2306	EN10	2306	X59
LC	250		85	2249	EN10	T	
LC	250		86	2249	EN10	2249	X59
MC	250		83 - 84	2249	MX10	2249	X59
MX	250		83 - 84	2249	MX10	2249	X59
MX	250		92 - 93	2352	MX10	2306	X59
MX	250		85	2249	MX10	T	
MX	250		86	2249	MX10	2249	X59
MX	250		88	2399	MX10	2399	X59
MX	250		89 - 90	2306	MX10	2306	X59
SX	250		96 - 02	2352	MX10	2353	X59
SX	250		03 -	2352	MX10	1108	X59
SX-F	250		06 -	2352	MX10	1108	X59
XC	250		85	2249	MX10	T	
XC	250		86 - 89	2249	MX10	2249	X59
	300	Baja	86 -	2249	EN10	T	
EXC	300		93 - 96	2352	EN10	2306	X59
EXC	300	Enduro	99 - 03	2352	EN10	2353	X59
EXC	300	Enduro	04 -	2352	EN10	1108	X59
EXC	300		90	2399	EN10	2399	X59
MX	300		90	2306	MX10	2306	X59
MX	300		92 -	2352	MX10	2306	X59
MXC	300		92 - 93	2352	MX10	2306	X59
XC	300		85	2249	MX10	T	
XC	300		86 - 90	2249	MX10	2249	X59
	350	Country Cross	85 -	2249	MX10	T	
	350	Freeride (4T)	12 -	1228	MX10	1219	X59
XC	350	/ MC	- 83	2249	MX10	T	
GS	350	500 K4	- 83	2249	EN10	T	
GS	350		83 - 86	2249	EN10	T	
EXC	350		87	2398	EN10	2398	X59
EXC	350		88 -	2399	EN10	2399	X59
EXC-F	350		11 -	2352	EN10	1108	X59
GS	350		87	2398	EN10	2398	X59
GS	350		88 -	2399	EN10	2399	X59
LC 4	350		92 -	2306	EN10	2306	X59
MX	350		87	2398	MX10	2398	X59
MX	350		88	2399	MX10	2399	X59
SX-F	350		11 -	2352	MX10	1108	X59
XC	360		96 - 97	2352	EN10	2353	X59
MX	360		96 - 97	2352	MX10	2353	X59
SX	360		96 - 97	2352	MX10	2353	X59
EXC	380	Enduro	98 -	2352	EN10	2353	X59
MX	380		98 -	2352	MX10	2353	X59
SX	380		98 - 02	2352	MX10	2353	X59
XC	380		98 -	2352	MX10	2353	X59
XC	390	/ MC	- 83	2249	MX10	T	
GS	390		83 -	2249	EN10	T	
	400	Enduro	87 -	2398	EN10	2398	X59
EXC	400	Racing	00 - 03	2352	EN10	2353	X59
EXC	400	Racing	04 -	2352	EN10	1108	X59
SX	400	Racing	00 - 02	2352	MX10	2353	X59
SXC	400	Tiainen Replica	97 -	2352	EN10	2353	X59
LC4	400		93 - 98	2352	EN10	2306	X59
LC4-E	400	Enduro	99 -	2352	EN10	2353	X59
SC	400	Supercompetition	96 - 99	2352	EN10	2353	X59
XC	420	/ MC	- 83	2249	MX10	T	
EXC	450		03	2352	EN10	2353	X59
EXC	450	(4T) / 6 Days (4T) / Racing	04 -	2352	EN10	1108	X59
SX	450		03 -	2352	MX10	1108	X59
XC-F	450		08 -	2352	MX10	1108	X59
	450	Rally	11 -	2352	EN10	2353	X59
MC	495	Leleu	82 - 83	2249	MX10	T	

T = Tambour / Mechanical drum / Strommel / Tamburo / Tambor

KTM

MX	495	Leleu	82 - 83	2249	MX10	T	
	500	Baja	86 -	2249	EN10	T	
EXC	500	(4T) / 6 Days (4T)	12 - 14	2352	EN10	1108	X59
MX	500		92 - 93	2352	MX10	2306	X59
XC	500	/ MC	- 83	2249	MX10	T	
GS	500	500K4 Enduro	83 -	2249	EN10	T	
LC	500		85	2249	EN10	T	
LC	500		86 -	2249	EN10	2249	X59
MX	500		85	2249	MX10	T	
MX	500		86	2249	MX10	2249	X59
MX	500		87	2398	MX10	2398	X59
MX	500		88	2399	MX10	2399	X59
MX	500		89 - 91	2306	MX10	2306	X59
MXC	500		92 - 93	2352	MX10	2306	X59
SX-F	505		07 - 08	2352	MX10	1108	X59
XC-F	505		09 -	2352	MX10	1108	X59
EXC	520	Racing	00 - 02	2352	EN10	2353	X59
SX	520	Racing	00 - 02	2352	MX10	2353	X59
MXC	525	Desert	03 - 04	2352	MX10	2353	X59
EXC	525	Racing	03	2352	EN10	2353	X59
EXC	525	Racing	04 -	2352	EN10	1108	X59
SX	525	Racing	03	2352	MX10	2353	X59
SX	525	Racing	04 - 06	2352	MX10	1108	X59
EXC	530	Racing	08	2352	MX10	1108	X59
SXC	540	Tiainen Replica	99 - 00	2352	MX10	2353	X59
LC4	550		87 -	2398	EN10	2398	X59
MX	550		87 -	2398	MX10	2398	X59
	550	Baja	86 -	2249	EN10	T	
MC	600		88 -	2398	MX10	2398	X59
LC4	600	Enduro	88 -	2398	EN10	2398	X59
	600	Enduro (4T)	84 -	2249	EN10	T	
LC4	600	Six Days	92 -	2352	EN10	2306	X59
EXC	600		87	2398	EN10	2398	X59
EXC	600		88	2399	EN10	2399	X59
GS	600		85	2249	EN10	T	
LC4	600		88 -	2398	EN10	2398	X59
MX	600		87	2398	MX10	2398	X59
MX	600		88	2399	MX10	2399	X59
XC	600	Cross / XCE Cross	85	2249	MX10	T	
XCE	600		85	2249	MX10	T	
EGS	620	Enduro / EGS-E	96 - 99	2352	EN10	2353	X59
EGS	620	Adventure / Rallye / EGS-E	99	2352	EN10	2353	X59
LC4	620	Supercompetition	96 - 00	2352	MX10	2353	X59
LC4	620	SX	95 - 99	2352	MX10	2353	X59
SXC	625		03 - 04	2352	MX10	2353	X59
LC4	640	Adventure R	00	2352	EN10	2353	X59
LC4	640	Adventure	01 - 02	2352	EN10	2353	X59
LC4	640	Adventure (2 sets)	03 - 07	2352	EN10	2353	X59
LC4	640	E Enduro	99 -	2352	EN10	2353	X59
LC4	660	Rally	01 -	2352	MX10	2353	X59
	690	Enduro	08 -	NA		2353	X59
	690	Enduro R	09 -	NA		2353	X59

LEM

	50	R2 / R3 / R3 XC	03 -	1128	MX10	1128	X59
RX	65		05 -	1128	MX10	1128	X59

MAICO

C-1	50	Hard Enduro	99 -	2469	MX10	T	
X-1	50	SuperCross	99 -	2469	MX10	T	
	250	Motocross	99 -	2352	MX10	2353	X59
	250	Enduro	99 -	2352	EN10	2353	X59
GP	250	All models	89	2399	MX10	2399	X59
GP	250	E	87 -	2387	MX10	2387	X59
GM	250	LC	85 -	2249	MX10	T	
GP	250	Motocross	87 -	2387	MX10	2387	X59
GM	250	Star	86 -	2387	MX10	2387	X59
MD	250		83 -	2249	MX10	2249	X59
GP	350		93 -	2399	MX10	2399	X59
GP	400	All models	89	2399	MX10	2399	X59
GP	400	E	87 -	2387	MX10	2387	X59
GP	400	Motocross	87 -	2387	MX10	2387	X59
	500		91	2399	MX10	2306	X59
	500	Motocross	99 -	2352	MX10	2353	X59
	500	Enduro	99 -	2352	EN10	2353	X59
GP	500	All models	89	2399	MX10	2399	X59
GP	500	E	87 -	2387	MX10	2387	X59
GM	500	LC	85 -	2249	MX10	T	
GP	500	Motocross	87 -	2387	MX10	2387	X59
GM	500	Star	86 -	2387	MX10	2387	X59
	500		93 -	2399	MX10	2399	X59

MALAGUTI

GP	550		87 -	2387	MX10	2387	X59
	50	Enduro	85 -	2249	EN10	T	
MDX	50		86 -	1089	MX10	T	
MDX	50	Gold Enduro	87 -	2260	EN10	NA	
MEX	50		86 -	2466	MX10	T	
MFX	50		86 -	2466	MX10	T	
MLX	50	Enduro	87 -	2260	EN10	NA	
MRX	50		89	2249	EN10	T	
MGX	425	Ronco	87 -	2466	MX10	T	

MONTESA

	80	Cross	96 -	2352	MX10	2353	X59
	80	Junior	96 -	2469	MX10	2328	X59
	125	Cota	88	2377	EN10	2377	X59
	125		96 -	2352	EN10	2353	X59
	250	E	95 -	2352	EN10	2353	X59
	260	Evasion	92	2377	EN10	2249	X59
	304	Cota	88	2377	EN10	2377	X59
	307	Cota	89	2377	EN10	2377	X59
	307	Cota Trial	88 -	2377	EN10	2377	X59
	309	Cota	89 -	2377	EN10	2249	X59
	310	Cota	89 -	2377	EN10	2249	X59
	311	Cota Trial	92	2377	EN10	2249	X59
	314	Cota	95 -	2377	EN10	2377	X59
	315	Cota R	97 -	2377	EN10	2377	X59
	320	Cota	96 -	2352	EN10	2353	X59
	335	Cota	87 - 91	2377	EN10	2377	X59
M7	360	Enduro	85	2377	EN10	T	

POLINI

X1	50	R	04 -	1128	MX10	1128	X59
X3	50	R	04 -	1128	MX10	1128	X59
X5	65	RP	05 -	1128	MX10	1128	X59

PRAGA

ED	250		99 -	2352	EN10	2353	X59
CD	610		99 -	2352	EN10	2353	X59

RIEJU

MR	80	Cross	87	2377	MX10	T	
MR	80	Enduro	87	2377	EN10	T	
	250	Marathon	09 - 10	2352	EN10	1108	X59
	450	Marathon	09 - 10	2352	EN10	1108	X59

SHERCO

	80	Trial 0.8 (2T)	01 - 04	2377	EN10	NA	
ST	80	(2T)	13 - 14	1228	MX10	NA	
	125	Trial 1.25 (2T)	99 - 05	2377	EN10	2377	X59
	125	SE 1.25 F Enduro (4T)	10 -	1146	EN10	NA	
ST	125	(2T)	13 - 14	1228	MX10	NA	
	200	Trial 2.0 (2T)	99 - 05	2377	EN10	2377	X59
	250	Trial 2.5 (2T)	99 - 05	2377	EN10	2377	X59
SE	250	Enduro 2.5i (4T) Inc.	08 - 10	2352	EN10	1103	X59
SE	250	/ R	14 -	2352	EN10	1108	X59
SE	250	F / F-R	14 -	2352	EN10	1108	X59
SE	250	i / iR	12 - 13	2352	EN10	1108	X59
SE	250	i-F	13	2352	EN10	1108	X59
	250	SX 2.5i F Moto Cross	10 -	2352	MX10	1103	X59
ST	250	(2T)	13 - 14	1228	MX10	NA	
	290	Trial 2.9 (2T)	99 - 05	2377	EN10	2377	X59
ST	290	(2T)	13 - 14	1228	MX10	NA	
SE	300	Enduro 3.0i (4T)	10 - 11	2352	EN10	1103	X59
SE	300	Enduro 3.0i (4T)	12 -	2352	EN10	1103	X59
SE	300	Enduro 3.0i (2T)	12 - 14	2352	EN10	1108	X59
SE	300	/ R	14 -	2352	EN10	1108	X59
SE	300	F / F-R	14 -	2352	EN10	1108	X59
SE	300	i / iR	12 - 13	2352	EN10	1108	X59
SE	300	i-F	13	2352	EN10	1108	X59
ST	305	(2T)	13 - 14	1228	MX10	NA	
	450	Enduro 4.5i (4T)	04 - 10	2352	EN10	1103	X59
SE	450	F / F-R	14 -	2352	EN10	1108	X59
SE	450	i / iR	12 - 13	2352	EN10	1108	X59
	510	Enduro 5.1i F	07 - 10	2352	EN10	1103	X59
SE	510	iR	12 - 13	2352	EN10	1108	X59

SUZUKI

RME	50		10 -	NA		1076	X59

T = Tambour / Mechanical drum / Strommel / Tamburo / Tambor

SUZUKI

RM	65		03 - 05	1034	MX10	2408	X59
RM	80	G / H / J / K	86 - 89	2469	MX10	T	
RM	80	L / M / N / P / R / S	90 - 95	2469	MX10	2469	X59
RM	80	T	96 - 01	2914	MX10	2469	X59
RM	85	/ L	02 - 04	2914	MX10	2469	X59
RM	85	/ L	05 - 10	2750	MX10	1152	X59
RM	100		03	2750	MX10	2328	X59
DR-Z	125	L	03 - 09	2914	MX10	T	
RM	125	F / G	85 - 86	2387	MX10	T	
RM	125	H	87	2288	MX10	T	
RM	125	J	88	2288	MX10	2328	X59
RM	125	K / L / M	89 - 91	2288	MX10	2299	X59
RM	125	N / P / R / S	92 - 95	2288	MX10	2299	X59
RM	125	T/V/W/X/Y K1-K5	96 - 05	2300	MX10	2314	X59
RM	125	K6 - K9	06 - 09	2300	MX10	2314	X59
RM	125	K10	10 -	2300	MX10	2314	X59
RM-E	125		05 -	2300	EN10	1103	X59
DR-Z	250	K1 / K7	01 - 07	2300	EN10	2299	X59
RM	250	F / G	85 - 86	2387	MX10	T	
RM	250	H / J	87 - 88	2288	MX10	2328	X59
RM	250	K / L / M	89 - 91	2288	MX10	2299	X59
RM	250	N / P / R / S	92 - 95	2288	MX10	2299	X59
RM	250	T/V/W/X/Y K1-K5	96 - 05	2300	MX10	2314	X59
RM	250	K6 - K9	06 - 09	2300	MX10	2314	X59
RM	250	K10	10 -	2300	MX10	2314	X59
RME	250		05 -	2300	EN10	1103	X59
RMX	250	K / L / M / N / P / R / S	89 - 95	2288	EN10	2299	X59
RMX	250	T / V / W	96 - 98	2300	EN10	2299	X59
RM-Z	250	E	04 - 09	2300	EN10	1103	X59
RM-Z	250	Efi	10 -	2300	EN10	1103	X59
DR-Z	400	E / S	00 - 08	2300	EN10	2314	X59
RM-X	450		05 -	2300	EN10	1103	X59
RM-Z	450		05 - 07	2300	MX10	1103	X59
RM-Z	450	Efi	08 -	2300	MX10	1103	X59
RM	500		85 - 86	2387	MX10	T	
RM	500	H	87 -	2288	MX10	2328	X59

SWM

	125	GP	86 -	2249	MX10	2249	
	125	S1 - S2		2249	MX10	T	
	250	S1 - S2		2249	MX10	T	
	250	Explorer	86	2249	MX10	2249	X59
	250	Pioner	86	2249	MX10	2249	X59
	300	R	15 -	2352	MX10	1108	X59
TRL	329	MJ	86 -	2249	EN10	T	

TM

	80	(Big Wheel)	02 - 04	2352	MX10	2353	X59
	80	Cross	96 - 01	2352	MX10	2353	X59
	80	Enduro	96 - 00	2352	EN10	2353	X59
	80	Junior Cross (Small Wheel)	02 - 04	2352	MX10	2353	X59
	80	Junior Cross	05 - 07	2352	MX10	2314	X59
	80	Minicross / Junior	96 - 00	2352	MX10	2314	X59
	85	(Big Wheel)	02 - 04	2352	MX10	2353	X59
	85	Cross	96 - 01	2352	MX10	2353	X59
	85	Junior Cross	05 - 07	2352	MX10	2314	X59
	85	Junior Cross (Small Wheel)	02 - 04	2352	MX10	2353	X59
	85	Minicross / Junior	96 - 00	2352	MX10	2314	X59
MX	85	JR	02 - 10	2352	MX10	2314	X59
	100	(Big Wheel)	02 - 04	2352	MX10	2353	X59
	100	Junior Cross (Small Wheel)	02 - 04	2352	MX10	2353	X59
	100	Junior Cross	05 - 07	2352	MX10	2314	X59
	125	Cross	95 - 00	2352	MX10	2353	X59
MX	125	(2T)	01 - 10	2352	MX10	2314	X59
	125	Enduro	95 - 00	2352	EN10	2353	X59
EN	125	Enduro (2T)	01 - 10	2352	EN10	2314	X59
EN	144	(2T)	08 - 10	2352	EN10	2314	X59
MX	144	(2T)	08 - 10	2352	MX10	2314	X59
	250	Enduro	95 - 00	2352	EN10	2353	X59
EN	250	F Enduro (4T)	04 - 10	2352	EN10	2314	X59
EN	250	Enduro (2T)	01 - 10	2352	EN10	2314	X59
EN	250	Fi	10	2352	EN10	2314	X59
	250	Cross	95 - 00	2352	MX10	2353	X59
MX	250	(2T)	01 - 10	2352	MX10	2314	X59
MX	250	(4T) Cross	02 - 10	2352	MX10	2314	X59
MX	250	Fi (4T)	10	2352	MX10	2314	X59
	300	Enduro (2T)	95 - 00	2352	EN10	2353	X59
EN	300	Enduro (2T)	01 - 10	2352	EN10	2314	X59
	300	Cross	95 - 00	2352	MX10	2353	X59
MX	300	(2T)	01 - 10	2352	MX10	2314	X59
MX	400	(4T) Cross	02 - 03	2352	MX10	2314	X59

TM

	400	Cross (4T)	95 - 00	2352	MX10	2353	X59
EN	450	F (4T)	04 - 10	2352	EN10	2314	X59
MX	450	F (4T)	04 - 10	2352	MX10	2314	X59
	530	Cross (4T)	98 - 00	2352	MX10	2353	X59
EN	530	F (4T)	04 - 10	2352	EN10	2314	X59
	530	Cross (4T)	02 - 03	NA		2314	X59
MX	530	F	05 - 10	2352	MX10	2314	X59

VERTEMATI

C	500	Cross	02 -	2352	MX10	2353	X59
E	500	Enduro	02 -	2352	EN10	2353	X59

VOR

EN	400		00 -	2352	EN10	2353	X59
MX	400		00 -	2352	MX10	2353	X59
EN	450		02 -	2352	EN10	2353	X59
MX	450		02 -	2352	MX10	2353	X59
EN	530		03 -	2352	EN10	2353	X59
MX	530		03 -	2352	MX10	2353	X59

YAMAHA

YZ	80	S / T / U / W	86 - 89	2424	MX10	T	
YZ	80	A / B / D	90 - 92	2424	MX10	T	
YZ	80	E / F / G / H1 / J1	93 - 01	2424	MX10	2328	X59
YZ	85	All models	02 - 10	2424	MX10	2328	X59
DT	125	Tenere Belgarda	88 - 92	2400	EN10	NA	
TDR	125	Italie 3XD 3SH	89 - 92	2400	EN10	NA	
TT-R	125	LW	00 - 10	2424	MX10	T	
WR	125		91 - 97	2288	EN10	2299	X59
WR	125		98 - 02	2300	EN10	2314	X59
YZ	125	N / S / T	85 - 87	2792	MX10	T	
YZ	125	U	88	2792	MX10	2284	X59
YZ	125	V / W	89	2288	MX10	2328	X59
YZ	125	A / B / D / E / F / G / H / J	90 - 97	2288	MX10	2299	X59
YZ	125	K / L / M / N / P	98 - 02	2300	MX10	2314	X59
YZ	125	R / S / T / V / W	03 - 07	2300	MX10	1103	X59
YZ	125	X / Y / Z	08 -	1183	MX10	1103	X59
IT	200	S	86	2792	MX10	T	
TT	200		85 -	2284	MX10	T	
WR	200	R	91 - 94	2288	EN10	2299	X59
TT	225	S / T	87 - 00	2284	MX10	T	
TT-R	225		01 - 04	2284	MX10	T	
XT	225		86 - 91	2284	MX10	T	
XT	225	E - H	92 - 00	2284	MX10	T	
TT	250		85 -	2284	MX10	T	
TT	250		87 - 92	2792	MX10	T	
TT	250	R	93 - 04	2288	EN10	2299	X59
TY	250	R	91 - 92	2377	EN10	T	
TY	250	R	93 - 94	2377	EN10	2377	X59
TY-Z	250	R	93 - 96	2377	EN10	2377	X59
TY-Z	250	R (Scottish)	93 - 96	2284	MX10	2299	X59
WR	250	ZB/ ZD/ ZE/ ZF/ ZG/ ZH/ZJ	91 - 97	2288	EN10	2299	X59
WR	250	ZK/FN/FP	98 - 02	2300	EN10	2314	X59
WR	250	FR/FS/FT/FV	03 - 06	2300	EN10	1103	X59
WR	250	FW/FX/FY/FZ	07 - 15	2300	EN10	1103	X59
WR	250	F	16 -	1183	MX10	1103	X59
YZ	250	N / S / T (2T)	85 - 87	2792	MX10	T	
YZ	250	U (2T)	88	2792	MX10	2284	X59
YZ	250	W / WRW (2T)	89	2288	MX10	2328	X59
YZ	250	A / WRA / B (2T)	90 - 91	2288	MX10	2299	X59
YZ	250	D / E / F / G / H / J (2T)	92 - 97	2288	MX10	2299	X59
YZ	250	K / L / M (2T)	98 - 00	2300	MX10	2314	X59
YZ	250	N / P (2T)	01 - 02	2300	MX10	2314	X59
YZ	250	FN / FP (4T)	01 - 02	2300	MX10	2314	X59
YZ	250	R / S / T / V / W (2T)	03 - 07	2300	MX10	1103	X59
YZ	250	FR / FS / FT / FV (4T)	03 - 06	2300	MX10	1103	X59
YZ	250	X / Y / Z (2T)	08 -	1183	MX10	1103	X59
YZ	250	FW/FX/FY/FZ/FA/FB/FD/FE (4T)	07 -	1183	MX10	1103	X59
TT	350	(1TJ)	85 - 89	2792	MX10	T	
TT	350	A (3GJ)	90 - 95	2792	MX10	T	
YZ	360		89	2288	MX10	2328	X59
WR	400	FK (4T)	98	2300	EN10	2299	X59
WR	400	FL / FM / FN (4T)	99 - 01	2300	EN10	2314	X59
YZ	400	FK (4T)	98	2300	MX10	2299	X59
YZ	400	FL (4T)	99	2300	MX10	2314	X59
WR	426	FN / FP (4T)	00 - 02	2300	EN10	2314	X59
YZ	426	FM / FN / FP (4T)	00 - 02	2300	MX10	2314	X59
WR	450	FR / FS / FT / FV (4T)	03 - 06	2300	EN10	1103	X59
WR	450	FW / FX / FY / FZ (4T)	07 -	2300	EN10	1103	X59
YZ	450	FR / FS / FT / FV (4T)	03 - 06	2300	MX10	1103	X59

T = Tambour / Mechanical drum / Strommel / Tamburo / Tambor

YAMAHA

YZ	450	FW (4T)	07	**2300**	MX10	**1103**	X59
YZ	450	FX / FY / FZ (4T)	08 -	**1183**	MX10	**1103**	X59
YZ	490	N / S / T / U / W / A	85 - 90	**2792**	MX10	**T**	
WR	500	B	91	**2288**	EN10	**2284**	X59
WR	500	ZD / ZE	92 - 93	**2288**	EN10	**2299**	X59
TT	600	N	85 - 88	**2284**	MX10	**T**	
TT	600		90	**2792**	MX10	**T**	
TT	600	E	94 - 01	**2352**	EN10	**2353**	X59
TT	600	E (Belgarda)	94 - 95	**2352**	EN10	**2299**	X59
TT	600	K (Belgarda)	93 - 95	**2352**	EN10	**2299**	X59
TT	600	K (From 4GV 003404)	95 - 96	**2352**	EN10	**2353**	X59
TT	600	R (5CH1 / 5CH2 / 5CH3)	97 - 02	**2352**	EN10	**2353**	X59
TT	600	RE (5CH5)	04	**2352**	EN10	**2353**	X59

T = Tambour / Mechanical drum / Strommel / Tamburo / Tambor

Quad ATV

ADLY

150	ATV	05 -		2	2469	ATV1	2469	ATV1	X59
150	Interceptor	05 -		2	2469	ATV1	2466	ATV1	
300	ATV	05 -		2	2469	ATV1	2469	ATV1	X59
300	Interceptor	05 -		2	2469	ATV1	2466	ATV1	
300	Cross X Over	07 -		2	1147	ATV1	T		
300	Cross X road	07 -		2	1147	ATV1	T		
300	Sport	07 -		2	1147	ATV1	NA		
320	S	07 -		2	1147	ATV1	T		
320	U	07 -		2	1147	ATV1	T		

AEON

100	Revo 2	04 -			T		2469	ATV1	X59
125	Overland	02 -			T		2326	ATV1	
180	Overland	02 -			T		2326	ATV1	
180	Roadster	02 -			T		2326	ATV1	

ARCTIC CAT

50	DVX	06 -			T		1123	ATV1	
90	DVX	06 -			T		1123	ATV1	
150	2x4	09 -			T		1123	ATV1	
250	2x4	05 -		2	1171	ATV1	1171	ATV1	X59
250	2x4 / 4x4	99 -	04	2	2926	ATV1	2926	ATV1	
300	2x4 / 4x4	98 -	04	2	2926	ATV1	2926	ATV1	
300	2x4 (Mid size)	10 -		2	1147	ATV1	1147	ATV1	X59
300	4x4	05 -		2	1171	ATV1	1171	ATV1	X59
300	ATV	10 -	12	2	1171	ATV1	1171	ATV1	X59
300	DVX	09 -		2	1171	ATV1	1151	ATV1	X59
350	ATV	12		2	1171	ATV1	1171	ATV1	X59
366	4x4 / SE	08 -	10	2	1171	ATV1	1171	ATV1	X59
375	2x4 / 4x4	02		2	2926	ATV1	2926	ATV1	
400	2x4 / 4x4	98 -	04	2	2926	ATV1	2926	ATV1	
400	2x4 / 4x4 (FIS)	05 -		2	1171	ATV1	1171	ATV1	X59
400	2x4/4x4 (FIS) (Man. Hand Brake)	05 -		2	2926	ATV1	2926	ATV1	
400	ATV (Mid size)	13 -		2	1171	ATV1	1171	ATV1	X59
400	DVX	04 -		2	2328	ATV1	2328	ATV1	X59
400	TBX 4x4	04		2	2926	ATV1	2926	ATV1	
400	TRV	07 -		2	1171	ATV1	1171	ATV1	X59
425		12 -		2	1171	ATV1	1171	ATV1	X59
450		11 -		2	1171	ATV1	1171	ATV1	X59
454	Bear Cat 2x4 / 4x4	96 -	98	2	2926	ATV1	2926	ATV1	
454	Artic Cat 4x4	98 -		2	2926	ATV1	2926	ATV1	
500	2x4 / 4x4	98 -	04	2	2926	ATV1	2926	ATV1	
500	2x4 / 4x4 (FIS)	02 -	04	2	2926	ATV1	2926	ATV1	
500	2x4 / 4x4 (FIS)	05 -		2	1171	ATV1	1171	ATV1	X59
500	ATV (Mid size) / XT	13 -		2	1171	ATV1	1171	ATV1	X59
500	ATV Hi Efi / LE	09 -	10	2	1171	ATV1	1171	ATV1	X59
500	TBX 4x4	02 -	04	2	2926	ATV1	2926	ATV1	
500	TBX 4x4	05 -		2	1171	ATV1	1171	ATV1	X59
500	TRV 4x4	03 -	04	2	2926	ATV1	2926	ATV1	
500	TRV 4x4	05 -		2	1171	ATV1	1171	ATV1	X59
550		09 -		2	1171	ATV1	1171	ATV1	X59
650	H1 4x4 Aut.	05 -		2	1171	ATV1	1171	ATV1	X59
650	H1 TBX 4x4 Aut. / TRV	07		2	1171	ATV1	1171	ATV1	X59
650	H1	10		2	1171	ATV1	1171	ATV1	X59
650	V2 4x4 Aut LE	05 -		2	1171	ATV1	1171	ATV1	X59
650	V2 4x4 Aut.	05 -		2	1171	ATV1	1171	ATV1	X59
700	TRV	09 -		2	1171	ATV1	1171	ATV1	X59
1000	TRV Thunder Cat	09 -		2	1171	ATV1	1171	ATV1	X59
1000	TRV	09 -		2	1171	ATV1	1171	ATV1	X59

BOMBARDIER

200	Rally 2x4	03 -	04	2		2469	ATV1	T		
200	Rally 2x4	05 -		2		2469	ATV1	2923	ATV1	X59
250	DS	06 -		2		1147	ATV1	1147	ATV1	
330	Outlander	03 -		1	L	2923	ATV1	2923	ATV1	X59
330	Outlander	03 -		1	R	1102	ATV1			
400	Outlander	03 -		1	L	2923	ATV1	2923	ATV1	X59
400	Outlander	03 -		1	R	1102	ATV1			
400	Outlander Max	03 -		1	L	2923	ATV1	2923	ATV1	X59
400	Outlander Max	03 -		1	R	1102	ATV1			
500	Quest	02 -		1	L	2923	ATV1	2923	ATV1	X59
500	Quest	02 -		1	R	1102	ATV1			
500	Traxter 4x4	99 -	01	2		2827	ATV1	2827	ATV1	
500	Traxter 4x4	02 -		1	L	2923	ATV1	2923	ATV1	X59
500	Traxter 4X4	02 -		1	R	1102	ATV1			
500	Traxter 4x4 Max	02 -		1	L	2923	ATV1	2923	ATV1	X59
500	Traxter 4x4 Max	02 -		1	R	1102	ATV1			
650	DS	01 -		1	L	2923	ATV1	2923	ATV1	X59
650	DS	01 -		1	R	1102	ATV1			
650	Quest	02 -		1	L	2923	ATV1	2923	ATV1	X59

BOMBARDIER

650	Quest	02 -		1	R	1102	ATV1			
650	Quest Max	02 -		1	L	2923	ATV1	2923	ATV1	X59
650	Quest Max	02 -		1	R	1102	ATV1			
650	Traxter Max	03 -		1	L	2923	ATV1	2923	ATV1	X59
650	Traxter Max	03 -		1	R	1102	ATV1			
800	Outlander	06 -		1	L	2923	ATV1	2923	ATV1	X59
800	Outlander	06 -		1	R	1102	ATV1			
800	Outlander XT	06 -		1	L	2923	ATV1	2923	ATV1	X59
800	Outlander XT	06 -		1	R	1102	ATV1			

CAN-AM

90	DS X	08 -		2		2469	ATV1	2469	ATV1	X59
250	DS	07 -		2		1147	ATV1	1147	ATV1	
400	Outlander EFI	09 -		1	L	2923	ATV1	1102	ATV1	X59
400	Outlander EFI	09 -		1	R	1102	ATV1			
400	Outlander Max STD	07 -		1	L	2923	ATV1	1102	ATV1	X59
400	Outlander Max STD	07 -		1	R	1102	ATV1			
400	Outlander STD	07 -		1	L	2923	ATV1	1102	ATVI	X59
400	Outlander STD	07 -		1	R	1102	ATV1			
400	Outlander MAX XT	07 -		1	L	2923	ATV1	1102	ATV1	X59
400	Outlander MAX XT	07 -		1	R	1102	ATV1			
400	Outlander XT	07 -		1	L	2923	ATV1	1102	ATV1	X59
400	Outlander XT	07 -		1	R	1102	ATV1			
450	DS	08 -				NA		2927	ATV1	X59
500	Outlander Max STD	07 -		1	L	2923	ATV1	1102	ATV1	X59
500	Outlander Max STD	07 -		1	R	1102	ATV1			
500	Outlander MAX XT	07 -		1	L	2923	ATV1	1102	ATVI	X59
500	Outlander MAX XT	07 -		1	R	1102	ATV1			
500	Outlander STD	07 -		1	L	2923	ATV1	1102	ATV1	X59
500	Outlander STD	07 -		1	R	1102	ATV1			
500	Outlander XT	07 -		1	L	2923	ATV1	1102	ATV1	X59
500	Outlander XT	07 -		1	R	1102	ATV1			
500	Renegade	08 -		1	L	2923	ATV1	1102	ATV1	X59
500	Renegade	08 -		1	R	1102	ATV1			
650	Outlander Max STD	07 -		1	L	2923	ATV1	1102	ATV1	X59
650	Outlander Max STD	07 -		1	R	1102	ATV1			
650	Outlander MAX XT	07 -		1	L	2923	ATV1	1102	ATV1	X59
650	Outlander MAX XT	07 -		1	R	1102	ATV1			
650	Outlander STD	07 -		1	L	2923	ATV1	1102	ATV1	X59
650	Outlander STD	07 -		1	R	1102	ATV1			
650	Outlander XT	07 -		1	L	2923	ATV1	1102	ATVI	X59
650	Outlander XT	07 -		1	R	1102	ATV1			
800	Outlander Max LTD	07 -		1	L	2923	ATV1	1102	ATV1	X59
800	Outlander Max LTD	07 -		1	R	1102	ATV1			
800	Outlander Max STD	07 -		1	L	2923	ATV1	1102	ATV1	X59
800	Outlander Max STD	07 -		1	R	1102	ATV1			
800	Outlander MAX XT	07 -		1	L	2923	ATV1	1102	ATV1	X59
800	Outlander MAX XT	07 -		1	R	1102	ATV1			
800	Outlander STD	07 -		1	L	2923	ATV1	1102	ATV1	X59
800	Outlander STD	07 -		1	R	1102	ATV1			
800	Outlander XT	07 -		1	L	2923	ATV1	1102	ATV1	X59
800	Outlander XT	07 -		1	R	1102	ATV1			
800	Renegade Efi	07 -		1	L	2923	ATV1	1102	ATV1	X59
800	Renegade Efi	07 -		1	R	1102	ATV1			
800	Renegade	08 -		1	L	2923	ATV1	1102	ATVI	X59
800	Renegade	08 -		1	R	1102	ATV1			
800	Renegade X	08 -		1	L	2923	ATV1	1102	ATV1	X59
800	Renegade X	08 -		1	R	1102	ATV1			
1000	Commander	11 -		1	L	2326	ATV1	2288	ATV1	
1000	Commander	11 -		1	R	2288	ATV1			
1000	Commander Max	14 -		1	L	2326	ATV1	2923	ATV1	X59
1000	Commander Max	14 -		1	R	2288	ATV1	1102	ATV1	X59
1000	Maverick	13 -		1	L	2923	ATV1	2923	ATV1	X59
1000	Maverick	13 -		1	R	1102	ATV1	1102	ATV1	X59

CANNONDALE

440	Blaze	03 -		1	L	2923	ATV1	2923	ATV1	X59
440	Blaze	03 -		1	R	1102	ATV1			
440	Cannibal	03 -		1	L	2923	ATV1	2923	ATV1	X59
440	Cannibal	03 -		1	R	1102	ATV1			
440	Glamis	03 -		1	L	2923	ATV1	2923	ATV1	X59
440	Glamis	03 -		1	R	1102	ATV1			
440	Moto	03 -		1	L	2923	ATV1	2923	ATV1	X59
440	Moto	03 -		1	R	1102	ATV1			
440	Speed	03 -		1	L	2923	ATV1	2923	ATV1	X59
440	Speed	03 -		1	R	1102	ATV1			

CF MOTO

CF	500	Ranger	10 -	12	1	L	2326	ATV1	NA
CF	500	Ranger	10 -	12	1	R	2288	ATV1	

1 - 2 = Nombre de jeux avant / Number of front sets / Anzahl Sets / Numero blister / Numero des juegos
L = Gauche / Left / Links / Sinistra / Izquierda
R = Droite / Right / Rechts / Destra / Derecha
NA = Non attribué / Not Available / Nicht verfügbar / Non disponible / No disponible

T = Tambour / Mechanical drum / Strommel / Tamburo / Tambor
= Racing

CF MOTO

CF	500	Terracross	11 - 12	1	L	2326	ATV1	NA			
CF	500	Terracross	11 - 12	1	R	2288	ATV1				
CF	625	Terracross	11 - 13	1	L	2326	ATV1	NA			
CF	625	Terracross	11 - 13	1	R	2288	ATV1				
CF	800	Tracker	13	1	L	2326	ATV1	NA			
CF	800	Tracker	13	1	R	2288	ATV1				

CPI

XS	250	Quad	06 -	2		2469	ATV1	NA			
	250	XS	07 -	2		1147	ATV1	NA			

DAELIM

ET	250	Quad	05 - 08	2		2469	ATV1	1184	ATV1		
ET	300	Quad	07 - 09	2		2469	ATV1	1184	ATV1		
ST	250	Sector Quad	05 - 06	2		2469	ATV1	1184	ATV1		

DERBI

DXR	200	Quad (Front disc)	04 -	2		2469	ATV1	2306	ATV1	X59	
DXR	200	Quad (Front drum)	04 -			T		2306	ATV1	X59	
DXR	250	Quad (Front disc)	04 -	2		2469	ATV1	2306	ATV1	X59	
DXR	250	Quad (Front drum)	04 -			T		2306	ATV1	X59	

E-TON

RXL	150	Vector	07			T		1184	ATV1		
RXL	150	Viper	07 -			T		1184	ATV1		
VXL	250	Vector, ST Vector	06 -	2		2469	ATV1	1184	ATV1		
VTX	300	Vortex, ST Vortex	07 -	2		2469	ATV1	1184	ATV1		
VXL	300	Vector, ST Vector	07 -	2		2469	ATV1	1184	ATV1		

FACTORY

	50	Helix	04 -			T		2469	ATV1	X59	
	50	Rex	04 -			T		2469	ATV1	X59	
	100	Helix	04 -			T		2469	ATV1	X59	
	100	Rex	04 -			T		2469	ATV1	X59	

GAS GAS

	50	Wild HP	04 -	2		2352	ATV1	2352	ATV1	X59	
	200	Wild HP	08 -	2		2352	ATV1	2352	ATV1	X59	
	240	Wild HP	04 -	2		2352	ATV1	2352	ATV1	X59	
	250	Wild HP	08 -	2		2352	ATV1	2352	ATV1	X59	
	300	Wild HP	03 -	2		2352	ATV1	2352	ATV1	X59	
	450	Wild HP	03 -	2		2352	ATV1	2352	ATV1	X59	
	515	Wild HP	09 -	2		2352	ATV1	2352	ATV1	X59	

GILERA

	250	Oregon Quad	07 -	2		2284	ATV1	1151	ATV1	X59	

HERCULES

	280	ATV	07 -	2		1147	ATV1	NA			
	300	ATV	07 -	2		1147	ATV1	NA			

HONDA

ATC	200	X	83 - 85	1		2328	ATV1	2328	ATV1	X59	
ATC	250	R	81	1		2408	ATV1	T			
ATC	250	R	82 - 84	1		2328	ATV1	2328	ATV1	X59	
ATC	250	R	85 - 86	1		1164	ATV1	1164	ATV1	X59	
ATC	250	X	85	1		1164	ATV1	2328	ATV1	X59	
TRX	250	R Fourtrax	86 - 89			NA		1164	ATV1	X59	
TRX	250	X Fourtrax	87			NA		1164	ATV1	X59	
TRX	250	EX Sportrax	01 - 08	2		2328	ATV1	T			
TRX	250	X9	09 -	2		2328	ATV1	T			
ATC	300	X	85	1		1164	ATV1	2328	ATV1	X59	
TRX	300	EX Fourtrax	93 - 08	2		2328	ATV1	2328	ATV1	X59	
TRX	300	EX Sportrax	01 - 08	2		2328	ATV1	2328	ATV1	X59	
TRX	300	X9	09 -	2		2328	ATV1	2328	ATV1	X59	
TRX	400	EX Fourtrax	99 - 08	2		2328	ATV1	2328	ATV1	X59	
TRX	400	EX Sportrax	01 - 08	2		2328	ATV1	2328	ATV1	X59	
TRX	400	X9	09 -	2		2328	ATV1	2328	ATV1	X59	
TRX	420	FA / FPA	09 -	2		2328	ATV1	1140	ATV1	X59	
TRX	420	FPE / FPM 4x4	09 -	2		2328	ATV1	T			
TRX	450	EX Sportrax	01 -	2		2328	ATV1	2328	ATV1	X59	
TRX	450	R	04 -	2		2300	ATV1	1140	ATV1	X59	
TRX	650	FA Rincon	03 - 05			T		1140	ATV1	X59	
TRX	650	FGA Rincon	04 - 05			T		1140	ATV1	X59	

HONDA

TRX	680	FA6 Rincon	06 -			T		1140	ATV1	X59	
TRX	680	FGA6 Rincon	06 -			T		1140	ATV1	X59	
TRX	700	XX	08 -	2		2300	ATV1	NA			

HUSABERG

	400	Enforcer Four	00 - 03	2		2352	ATV1	2352	ATV1	X59	

HYOSUNG

	450	Rapier	06 -	2		2408	ATV1	2328	ATV1	X59	

KAWASAKI

KSF	250	A1-A17 Mojave	87 -	2		2799	ATV1	2328	ATV1	X59	
KXF	250	A1 / A2 Tecate	87 - 88	2		2799	ATV1	2328	ATV1	X59	
KXT	250	A1 Tecate Trike	84 -			T		2469	ATV1	X59	
KXT	250	A2 / B1 Tecate Trike	85 - 86	1		2306	ATV1	2306	ATV1	X59	
KXT	250	B2 Tecate Trike	85 -	1		2799	ATV1	2328	ATV1	X59	
KEF	300	A1-A6 Lakota	95 -	2		2799	ATV1	2328	ATV1	X59	
KLF	300	B1-B13 Bayou	88 -	2		2306	ATV1	T			
KLF	300	C1-C12 Bayou	89 - 05	1	L	2288	ATV1	T			
KLF	300	C1-C12 Bayou	90 - 05	1	R	2326	ATV1	T			
KVF	300	A1-A2 / B1-B2 Prairie	99 -	2		2408	ATV1	T			
	300	Brute Force	13 -	2		2408	ATV1	1147	ATV1	X59	
KVF	360	2x4 / 4x4 Prairie	03 - 06	2		2408	ATV1	T			
KFX	400		02 -	2		2408	ATV1	2328	ATV1	X59	
KLF	400	B1-B7 Bayou	93 - 99	1	L	2288	ATV1	T			
KLF	400	B1-B7 Bayou	93 - 99	1	R	2326	ATV1	T			
KVF	400	A1-A2 / B1 Prairie	97 - 98	2		2408	ATV1	T			
KVF	400	C1-C2 / D1-D2 Prairie	99 -	2		2408	ATV1	T			
KFX	450		07 -	1	L	1142	ATV1	2328	ATV1	X59	
KFX	450		07 -	1	R	1141	ATV1				
KVF	650	Brute Force 4X4 D/E	05 -	1	L	1142	ATV1	T			
KVF	650	Brute Force 4X4 D/E	05 -	1	R	1141	ATV1				
KVF	650	Brute Force 4X4 i F/G/H	07 -	1	L	2288	ATV1	T			
KVF	650	Brute Force 4X4 i F/G/H	07 -	1	R	2326	ATV1				
KVF	650	Prairie	01 - 03	1	L	1142	ATV1	T			
KVF	650	Prairie	01 - 03	1	R	1141	ATV1				
KFX	700	V-Force	04 -	1	L	1142	ATV1	T			
KFX	700	V-Force	04 -	1	R	1141	ATV1				
KSV	700	V-Force A1	04 -	1	L	1142	ATV1	T			
KSV	700	V-Force A1	04 -	1	R	1141	ATV1				
KVF	700	Prairie	04 -	1	L	1142	ATV1	T			
KVF	700	Prairie	04 -	1	R	1141	ATV1				
KRF	750	Teryx 4x4	08 -	1	L	2288	ATV1	T			
KRF	750	Teryx 4x4	08 -	1	R	2326	ATV1				
KVF	750	Brute Force 4X4 i	04 -	1	L	2288	ATV1	T			
KVF	750	Brute Force 4X4 i	04 -	1	R	2326	ATV1				
	800	Teryx BEF/CEF/DEF	14 -	1	L	2288	ATV1	T			
	800	Teryx BEF/CEF/DEF	14 -	1	R	2326	ATV1				
	800	Teryx 4 BEF/CEF/DEF	14 -	1	L	2288	ATV1	T			
	800	Teryx 4 BEF/CEF/DEF	14 -	1	R	2326	ATV1				

KTM

SX / XC	450	ATV	08 -	2		1204	ATV1	1205	ATV1	X59	
SX / XC	505	ATV	08 -	2		1204	ATV1	1205	ATV1	X59	
SX / XC	525	ATV	08 -	2		1204	ATV1	1205	ATV1	X59	

KYMCO

	50	MXer	00 - 07			T		1123	ATV1		
	50	MXu	05 - 10			T		1123	ATV1		
	90	Maxxer	05 - 06			T		1123	ATV1		
	125	MXer	02 - 07			T		1123	ATV1		
	150	MXer	02 - 07			T		1123	ATV1		
	150	MXu	05 - 10			T		1123	ATV1		
	250	KXR	04 - 07	2		1147	ATV1	1151	ATV1	X59	
	250	MXu	04 - 09	2		1147	ATV1	1151	ATV1	X59	
	250	Urban Quad	06 -	2		1147	ATV1	1151	ATV1	X59	
	300	Maxxer	06 - 13	2		1147	ATV1	1151	ATV1	X59	
	300	MXu	06 -	2		1147	ATV1	1147	ATV1		
	400	Maxxer	09 -	2		1171	ATV1	1171	ATV1	X59	
	400	MXu	08 -	2		1171	ATV1	1171	ATV1	X59	
	450	Maxxer	10 -	2		1171	ATV1	1171	ATV1	X59	
	500	MXu	05 - 09	2		1147	ATV1	1147	ATV1		
	500	UXV 4x4	08 -	2		1147	ATV1	1147	ATV1		

LAVERDA

	400	Quasar 4x4	04 -	2		2926	ATV1	2926	ATV1		
	500	Quasar 4x4 / C	04 -	2		2926	ATV1	2926	ATV1		

1 - 2 = Nombre de jeux avant / Number of front sets / Anzahl Sets / Numero blister / Numero des juegos
L = Gauche / Left / Links / Sinistra / Izquierda
R = Droite / Right / Rechts / Destra / Derecha
NA = Non attribué / Not Available / Nicht verfügbar / Non disponible / No disponible

T = Tambour / Mechanical drum / Strommel / Tamburo / Tambor
= Racing

LONCIN

LX	110	02 -	2	2326	ATV1	T			
LX	125	02 -	2	2326	ATV1	T			

MZ / MUZ

	125	VRT				T		2326	ATV1	
	150	VRS				T		2469	ATV1	X59
	175	VRT				T		2326	ATV1	

PGO

	50	Bug Rider	06 -			NA		2408	ATV1	X59
	50	X-Rider	03 -			T		2469	ATV1	X59
	125	X-Rider	03 -			T		2469	ATV1	X59
	150	Bugxter	05 -			NA		2408	ATV1	X59
	150	X-Rider	03 -			T		2469	ATV1	X59

POLARIS

	200	Phoenix	05 - 08	2	2469	ATV1	2306	ATV1	X59
	200	Sawtooth	06	2	2469	ATV1	2469	ATV1	X59
	250	2x4 / 4x4	90 - 93	2	2927	ATV1	2924	ATV1	X59
	250	Big Boss 4x6	89 - 93	2	2927	ATV1	2924	ATV1	X59
	250	Trail Blazer	90 - 98	2	2927	ATV1	2924	ATV1	X59
	250	Trail Blazer	99 - 04	2	2927	ATV1	2925	ATV1	
	250	Trail Blazer	05 - 06	2	2927	ATV1	NA		
	250	Trail Boss	91 - 99	2	2927	ATV1	2924	ATV1	X59
	250	Trail Boss 2x4 / 4x4	88 - 89	2	2927	ATV1	2924	ATV1	X59
	250	Xplorer 4x4	00 -	2	2927	ATV1	2925	ATV1	
	300	2x4 / 4x4	94 - 95	2	2927	ATV1	2924	ATV1	X59
	300	Big Boss 6x6	94	2	2927	ATV1	2924	ATV1	X59
	300	Hawkeye	06 -	2	1171	ATV1	1171	ATV1	X59
	300	Sportsman 4x4	08 -	2	2927	ATV1	2927	ATV1	X59
	300	Xplorer 4x4	96 - 00	2	2927	ATV1	2924	ATV1	X59
	300	Xpress L	96 - 97	2	2927	ATV1	2924	ATV1	X59
	325	Magnum 2x4 / 4x4	00 - 02	2	2927	ATV1	2925	ATV1	
	325	Trail Boss	00 - 02	2	2927	ATV1	2925	ATV1	
	325	Xpedition	00 - 01	2	2927	ATV1	2925	ATV1	
	325	Xpedition	02 -	2	2927	ATV1	1165	ATV1	X59
	330	ATP 4x4	04 - 05	2	2927	ATV1	2927	ATV1	X59
	330	ATP	06 -	2	2927	ATV1	1165	ATV1	X59
	330	E Trail Blazer	08 -	2	2927	ATV1	1165	ATV1	X59
	330	Magnum 2x4 / 4x4	03 - 06	2	2927	ATV1	1165	ATV1	X59
	330	Trail Boss	03 - 04	2	2927	ATV1	2925	ATV1	
	330	Trail Boss	05 - 10	2	2927	ATV1	NA		
	335	Sportsman 4x4	99 - 00	2	2927	ATV1	2925	ATV1	
	335	Worker 4x4	99 - 00	2	2927	ATV1	2925	ATV1	
	350	Big Boss L	93	2	2927	ATV1	2924	ATV1	X59
	350	L 2x4 / 4x4	90	2	2927	ATV1	2924	ATV1	X59
	350	L 4x4	93	2	2927	ATV1	2924	ATV1	X59
	350	Sportsman 4x4	93	2	2927	ATV1	2924	ATV1	X59
	350	Trail Boss L 2x4 / 4x4	91 - 93	2	2927	ATV1	2924	ATV1	X59
	400	Big Boss L	94 - 97	2	2927	ATV1	2924	ATV1	X59
	400	L 2x4	94 - 95	2	2927	ATV1	2924	ATV1	X59
	400	L 4x4	94	2	2927	ATV1	2924	ATV1	X59
	400	Scrambler 2x4 / 4x4	00 - 02	2	2927	ATV1	2925	ATV1	
	400	Scrambler 4x4	98 - 00	2	2927	ATV1	2925	ATV1	
	400	Scrambler L 4x4	95 - 97	2	2927	ATV1	2924	ATV1	X59
	400	Sport L	94 - 98	2	2927	ATV1	2924	ATV1	X59
	400	Sportsman	01 - 02	2	2927	ATV1	2925	ATV1	
	400	Sportsman L 4x4	94 - 97	2	2927	ATV1	2924	ATV1	X59
	400	Xplorer L 4x4	95 - 98	2	2927	ATV1	2924	ATV1	X59
	400	Xplorer L 2x4 / 4x4	99 - 02	2	2927	ATV1	2925	ATV1	
	400	Xpress L	96 - 97	2	2927	ATV1	2924	ATV1	X59
	425	Magnum 2x4 / 4x4	95 - 98	2	2927	ATV1	2924	ATV1	X59
	425	Magnum 6x6	96 - 97	2	2927	ATV1	2924	ATV1	X59
	425	Xpedition 4x4	00 -	2	2927	ATV1	2925	ATV1	
	450	Outlaw S	08	2	1220	ATV1	2927	ATV1	X59
	450	Outlaw MXR	09 - 10	2	1220	ATV1	2927	ATV1	X59
	450	Sportsman	06 -	2	2927	ATV1	1165	ATV1	X59
	455	Diesel 4x4 EBS	99 - 00	2	2927	ATV1	2925	ATV1	
	455	Diesel	01 -	2	2927	ATV1	2925	ATV1	
	500	ATP HO	04 - 05	2	2927	ATV1	2927	ATV1	X59
	500	Big Boss 6x6	98 - 99	2	2927	ATV1	2924	ATV1	X59
	500	Magnum 4x4	99 - 01	2	2927	ATV1	2925	ATV1	
	500	Magnum 2X4 / 4x4 HDS	02 - 03	2	2927	ATV1	1165	ATV1	X59
	500	Outlaw	06 - 07	2	2927	ATV1	2927	ATV1	X59
	500	Predator	03 - 05	2	2927	ATV1	2927	ATV1	X59
	500	Predator E	06 -	2	2927	ATV1	1165	ATV1	X59
	500	Ranger 6x6	00 - 02	2	2927	ATV1	1165	ATV1	X59
	500	Ranger 2x4	08 -	2	1229	ATV1	NA		
	500	Ranger 2x4 Efi	08 -	2	1229	ATV1	NA		
	500	Ranger 4x4	12 -	2	1229	ATV1	NA		

POLARIS

	500	Revolver	06 -	2	2927	ATV1	2927	ATV1	X59
	500	Scrambler 2x4	01 - 02	2	2927	ATV1	2925	ATV1	
	500	Scrambler 2x4	07 - 08	2	2927	ATV1	1165	ATV1	X59
	500	E Scrambler 2x4 / 4x4	08 -	2	2927	ATV1	1165	ATV1	X59
	500	Scrambler 4x4	97	2	2927	ATV1	2924	ATV1	X59
	500	Scrambler 4x4	98 - 04	2	2927	ATV1	2925	ATV1	
	500	Scrambler 4x4	05 - 10	2	2927	ATV1	1165	ATV1	X59
	500	Sportsman 4x4	96 - 97	2	2927	ATV1	2924	ATV1	X59
	500	Sportsman 4x4 EBS/RSE	98 - 02	2	2927	ATV1	2925	ATV1	
	500	Sportsman 6x6	00 - 08	2	2927	ATV1	1165	ATV1	X59
	500	Sportsman Efi / HO	03 - 08	2	2927	ATV1	1165	ATV1	X59
	500	Sportsman Touring	08 - 10	2	2927	ATV1	2927	ATV1	X59
	500	Sportsman Efi Quad	08 - 10	2	2927	ATV1	1165	ATV1	X59
	500	XP Sportsman	09	2	1222	ATV1	1222	ATV1	
	500	Sportsman X2	06 - 08	2	2927	ATV1	1165	ATV1	X59
	500	Sportsman X2 Efi	07 - 09	2	2927	ATV1	2927	ATV1	X59
	500	Xplorer 4x4	97	2	2927	ATV1	2924	ATV1	X59
	525	Outlaw S	08 - 10	2	1220	ATV1	2927	ATV1	X59
	525	Outlaw IRS	08 - 10	2	1220	ATV1	2927	ATV1	X59
	550	XP Sportsman EPS	09 - 10	2	1222	ATV1	1222	ATV1	
	550	Sportsman X2	10	2	1222	ATV1	1222	ATV1	
	570	RZR	12 -	2	1220	ATV1	2927	ATV1	
	550	Sportsman Touring EPS	10 -	2	1222	ATV1	1222	ATV1	
	570	Sportsman Efi EPS	11 - 13	2	2927	ATV1	1222	ATV1	
	570	Sportsman Touring Efi	14 -	2	2927	ATV1	1222	ATV1	
	600	Sportsman 4x4	03 - 05	2	2927	ATV1	1165	ATV1	X59
	700	MVRS 4x4	08 -	2	1229	ATV1	1229	ATV1	
	700	Ranger 4x4 Efi	08 -	2	1229	ATV1	1229	ATV1	
	700	Ranger 6x6 Efi	12 -	2	1229	ATV1	NA		
	700	Sportsman 4x4	02 - 06	2	2927	ATV1	1165	ATV1	X59
	700	Sportsman MV 700	05 - 06	2	2927	ATV1	1165	ATV1	X59
	700	Sportsman Efi	07 -	2	2927	ATV1	1165	ATV1	X59
	700	Sportsman X2	08 -	2	2927	ATV1	2927	ATV1	X59
	800	MVRS 4x4	08 -	2	1229	ATV1	1229	ATV1	
	800	Ranger 4x4 Efi	10 -	2	1229	ATV1	1229	ATV1	
	800	Ranger 6x6 Efi	10 -	2	1229	ATV1	1229	ATV1	
	800	Ranger Crew	12 -	2	1229	ATV1	1229	ATV1	
	800	Ranger RZR4 Efi	12 -	2	1229	ATV1	NA		
	800	Ranger XP	12 -	2	1229	ATV1	NA		
	800	RZR	08 -	2	1220	ATV1	2927	ATV1	X59
	800	Sportsman	12 - 14	2	1222	ATV1	1222	ATV1	
	800	Sportsman Efi	05 - 07	2	2927	ATV1	1165	ATV1	X59
	800	Sportsman Efi	10 - 13	2	2927	ATV1	1222	ATV1	
	800	Sportsman X2 Efi	07 - 09	2	2927	ATV1	2927	ATV1	X59
	800	Sportsman Efi Int/HO	07 - 10	2	2927	ATV1	1165	ATV1	X59
	800	Sportsman Touring / Efi	08 - 09	2	2927	ATV1	2927	ATV1	X59
	800	Sportsman Efi 6x6 Big Boss	09 - 10	2	2927	ATV1	2927	ATV1	X59
	850	XP Sportsman	09 - 13	2	1222	ATV1	1222	ATV1	
	850	XP EPS Sportsman	09 - 13	2	1222	ATV1	1222	ATV1	
	900	Ranger 4x4 Diesel	10 -	2	1229	ATV1	1229	ATV1	
	900	Ranger RZR4 XP Efi	12 -	2	1229	ATV1	1229	ATV1	
	900	Ranger RZR4 XP4 Efi	12 -	2	1229	ATV1	1229	ATV1	
	900	XP ESP	13 -	2	1229	ATV1	1230	ATV1	
	1000	RZR XP	14 -	2	1229	ATV1	1229	ATV1	
	1000	RZR XP Turbo EPS	16 -	2	1247	ATV1	1229	ATV1	

SUZUKI

LT	230	EH/EJ/EK/EL/EM/EN/EP	86 - 93	2	2799	ATV1	2328	ATV1	X59
LT	230	SF / SG / SH / SJ	85 - 88	2	2799	ATV1	2328	ATV1	X59
LT	250	RF / RG / RH	85 - 87	2	2799	ATV1	2328	ATV1	X59
LT	250	RJ/RK/RL/RM/RN	88 - 94	2	2799	ATV1	2328	ATV1	X59
LT	250	SK / SL	89 - 90	2	2799	ATV1	2328	ATV1	X59
LT-F	250	Ozark	02 - 10	2	2408	ATV1	T		
LT-Z	250	Quad Sport	04 - 10	2	2408	ATV1	T		
LT-F	300	King Quad	02 -	1 R	2326	ATV1	T		
LT-F	300	King Quad	02 -	1 L	2288	ATV1	T		
KLT-A	400	King Quad	08 -	1 R	1236	ATV1	T		
KLT-A	400	King Quad	08 -	1 L	1235	ATV1	T		
KLT-F	400	King Quad	08 -	1 R	1236	ATV1	T		
KLT-F	400	King Quad	08 -	1 L	1235	ATV1	T		
LT-A	400	Eiger 2WD / 4WD	02 - 07	2	2408	ATV1	T		
LT-A	400	King Quad	08 -	1 R	1236	ATV1	T		
LT-A	400	King Quad	08 -	1 L	1235	ATV1	T		
LT-F	400	Eiger 2WD / 4WD	02 - 07	2	2408	ATV1	T		
LT-F	400	King Quad	08 -	1 R	1236	ATV1	T		
LT-F	400	King Quad	08 -	1 L	1235	ATV1	T		
LT-Z	400	Quad Sport	03 - 10	2	2408	ATV1	2328	ATV1	X59
LT-A	450	King Quad	07 -	1 R	1236	ATV1	T		
LT-A	450	King Quad	07 -	1 L	1235	ATV1	T		
LT-R	450	Quad Racer	06 -	1 L	2288	ATV1	2328	ATV1	X59
LT-R	450	Quad Racer	06 -	1 R	2326	ATV1			
LT	500	RH / RJ / RK / RL	87 - 90	2	2799	ATV1	2328	ATV1	X59

1 - 2 = Nombre de jeux avant / Number of front sets / Anzahl Sets / Numero blister / Numero des juegos
L = Gauche / Left / Links / Sinistra / Izquierda
R = Droite / Right / Rechts / Destra / Derecha
NA = Non attribué / Not Available / Nicht verfügbar / Non disponible / No disponible

T = Tambour / Mechanical drum / Strommel / Tamburo / Tambor
= Racing

SUZUKI

LT-A	500	FY1/FK1 Quadmaster	00 -	1	L	2288	ATV1	T				
LT-A	500	FY1/FK1 Quadmaster	00 -	1	R	2326	ATV1					
LT-A	500	FK2 - FK7 Vinson	02 - 07	2		2408	ATV1	1102	ATV1	X59		
LT-A	500	XPLO	10 -	1	L	1236	ATV1	NA				
LT-A	500	XPLO	10 -	1	R	1235	ATV1	NA				
LT-F	500	FW/FX/FY2 Quadrunner	98 - 02	1	L	2288	ATV1	T				
LT-F	500	FW/FX/FY2 Quadrunner	98 - 02	1	R	2326	ATV1	T				
LT-F	500	FK3 - FK7 Vinson Quadrunner	03 - 07	2		2408	ATV1	T				
LT-A	650	FK2 Vinson	02 -	2		2408	ATV1	1102	ATV1	X59		
LT-A	700	King Quad	05 - 07	1	L	1236	ATV1	NA				
LT-A	700	King Quad	05 - 07	1	R	1235	ATV1					
LT-V	700	Quadrunner Twin Peaks	04 - 05	1	R	1141	ATV1	NA				
LT-V	700	Quadrunner Twin Peaks	04 - 05	1	L	1142	ATV1					
LT-A	750	King Quad	08 - 09	1	L	1236	ATV1	NA				
LT-A	750	King Quad	08 - 09	1	R	1235	ATV1	NA				
LT-A	750	XPLO	10 -	1	L	1236	ATV1	NA				
LT-A	750	XPLO	10 -	1	R	1235	ATV1	NA				

SYM

	200	Trackrunner	05 - 09	2		1147	ATV1	1184	ATV1			
	200	Quadlander	05 - 09	2		1147	ATV1	1184	ATV1			
	250	Quadlander	05 - 09	2		1147	ATV1	1184	ATV1			
	300	Citymax	06 -	2		1147	ATV1	1184	ATV1			
	300	Outlander / S	07 -	2		1147	ATV1	1147	ATV1			
	300	Quadlander	06 -	2		1147	ATV1	1147	ATV1			
	600	Quadraider	06 - 07	2		2408	ATV1	1147	ATV1			
	600	Quadraider	08 - 09	2		1147	ATV1	1147	ATV1			
	600	Quadraider LE	10 -	2		1147	ATV1	1147	ATV1			

TGB

	50	Hornet	04 - 05			T		2469	ATV1	X59		
	90	Hornet	04 - 05			T		2469	ATV1	X59		
	250	Blade / Congo	06 - 07	2		2306	ATV1	2469	ATV1	X59		
	325	Blade 4x2 / LE	07 -	2		2306	ATV1	2469	ATV1	X59		
	325	Target 4x2	09 -	2		2469	ATV1	2306	ATV1	X59		
	400	Avenger 4x2 / LE	07 - 09	2		1147	ATV1	1147	ATV1			
	400	Target 4x2	09 -	2		2469	ATV1	2306	ATV1	X59		
	425	Blade 4x4	07 - 09	2		1147	ATV1	1147	ATV1			
	425	Blade 4x4 SE	09 -	2		1147	ATV1	1147	ATV1			
	425	Target 4x2	09 -	2		2469	ATV1	2306	ATV1	X59		
	500	Avenger 4x2 R	07 - 09	2		1147	ATV1	1147	ATV1			
	500	Target 4x2	09 -	2		2469	ATV1	2306	ATV1	X59		
	525	Blade 4x4 SE	09 -	2		1147	ATV1	1147	ATV1			
	525	Blade 4x4 SL	09 -	2		1147	ATV1	2306	ATV1	X59		
	525	SE 4x4	09 -	2		1147	ATV1	2306	ATV1	X59		
	525	Target 4x4	09 -	2		2469	ATV1	2306	ATV1	X59		
	550	Blade 4x4 SE / SL	09 -	2		1147	ATV1	2306	ATV1	X59		

TRITON

	250	Baja		2		2306	ATV1	2306	ATV1	X59		
	300	Baja		2		2306	ATV1	2306	ATV1	X59		
	300	Outback		2		2306	ATV1	2306	ATV1	X59		
	400	Baja		2		2306	ATV1	2306	ATV1	X59		
	400	Outback		2		2306	ATV1	2306	ATV1	X59		
	450	Enduro		2		2306	ATV1	2306	ATV1	X59		

YAMAHA

YFS	200	R Blaster	03 - 06	2		2408	ATV1	2328	ATV1	X59		
YFM	250	AN Bruin	05 - 06	2		2408	ATV1	T				
YFM	250	Bear Tracker	01 - 04	2		2408	ATV1	T				
YFM	250	Big Bear	07 -	2		2408	ATV1	T				
YFM	250	R Raptor	08 -	1	L	1193	ATV1	2328	ATV1	X59		
YFM	250	R Raptor	08 -	1	R	1192	ATV1					
YTZ	250	TR1-Z N/S	85 - 86	1		2284	ATV1	2284	ATV1	X59		
YFM	300	Warrior	89	2		2408	ATV1	2328	ATV1	X59		
YFM	350	Big Bear	99	2		2408	ATV1	T				
YFM	350	Bruin 4x2 / 4x4	04 - 06	2		2408	ATV1	T				
YFM	350	Wolverine 4x2	95 - 05	2		2408	ATV1	2328	ATV1	X59		
YFM	350	Wolverine 4x2	06 - 09	2		2408	ATV1	T				
YFM	350	R Raptor	04 - 09	2		2328	ATV1	2328	ATV1	X59		
YFM	350	Grizzly 4x2 / 4x4	07 -	2		2408	ATV1	T				
YFM	350	Warrior XT/XU	87 - 88	2		2284	ATV1	2328	ATV1	X59		
YFM	350	Warrior XW/XA-M	89 -	2		2408	ATV1	2328	ATV1	X59		
YFM	350	XA - M Warrior	92 - 04	2		2408	ATV1	2328	ATV1	X59		
YFZ	350	Banshee (A-M)	87 - 89	2		2284	ATV1	2328	ATV1	X59		
YFZ	350	Banshee (T-W)	90 - 09	2		2408	ATV1	2328	ATV1	X59		
YFM	400	FAM / FAN Kodiak	00 - 01	2		2408	ATV1	2923	ATV1	X59		
YFM	400	FWP 4x4 (Big Bear)	02	2		2328	ATV1	T				
YFM	400	FPR/FPS (Big Bear)	03 - 04	2		2408	ATV1	T				

YAMAHA

YFM	400	Kodiak Auto FAR/FAS	03 - 04	2		2408	ATV1	T				
YFM	400	Kodiak AR (5VH3/4)	03	2		2408	ATV1	T				
YFM	400	FAT/FAV (Big Bear)	05 - 06	2		2408	ATV1	2923	ATV1	X59		
YFM	400	Grizzly FGW/FGX	07 - 08	2		2408	ATV1	2923	ATV1	X59		
YFM	450	Kodiak FAR/FAS (5ND3/4)	03 - 04	2		2408	ATV1	2923	ATV1	X59		
YFM	450	Kodiak FAT/FAHT/FAV	05 - 06	2		2408	ATV1	2923	ATV1	X59		
YFM	450	Grizzly EPS	07 -	2		2408	ATV1	2923	ATV1	X59		
YFM	450	Wolverine FXV-FXZ	06 -	2		2408	ATV1	2923	ATV1	X59		
YFZ	450	S / T / R	04 - 05	1	L	2288	ATV1	2328	ATV1	X59		
YFZ	450	S / T / R	04 - 05	1	R	2326	ATV1					
YFZ	450	V / W / X	06 - 08	1	L	2288	ATV1	1164	ATV1	X59		
YFZ	450	V / W / X	06 - 08	1	R	2326	ATV1					
YFZ	450	RY / RZ	09 -	1	L	2288	ATV1	1164	ATV1	X59		
YFZ	450	RY / RZ	09 -	1	R	2326	ATV1					
YXR	450	Rhino	06 -	1	L	2288	ATV1	1102	ATV1	X59		
YXR	450	Rhino	06 -	1	R	2326	ATV1					
YFM	550	Grizzly EPS	07 -	1	L	1193	ATV1	1195	ATV1			
YFM	550	Grizzly EPS	07 -	1	R	1192	ATV1	1194	ATV1			
YFM	600	Grizzly FWAK-FWAN	98 - 01	2		2328	ATV1	T				
YFM	600	Grizzly Hunting HM/HMC	00 -	2		2328	ATV1	T				
YFM	660	Raptor RN-RT	01 - 05	2		2408	ATV1	2408	ATV1	X59		
YFM	660	Grizzly FR /FS/FT	03 - 05	2		2408	ATV1	NA				
YFM	660	Grizzly FWAP-FWAV	02 - 08	2		2408	ATV1	NA				
YXR	660	Rhino	04 - 06	1	L	2288	ATV1	1102	ATV1	X59		
YXR	660	Rhino	04 - 06	1	R	2326	ATV1					
YFM	700	Grizzly EPS	07 -	1	L	1193	ATV1	1195	ATV1			
YFM	700	Grizzly EPS	07 -	1	R	1192	ATV1	1194	ATV1			
YFM	700	Kodiak EPS	16 -	1	L	1193	ATV1	1195	ATV1			
YFM	700	Kodiak EPS	16 -	1	R	1192	ATV1	1194	ATV1			
YFM	700	R Raptor	06 -	1	L	2288	ATV1	1102	ATV1	X59		
YFM	700	R Raptor	06 -	1	R	2326	ATV1					

1 - 2 = Nombre de jeux avant / Number of front sets / Anzahl Sets / Numero blister / Numero des juegos
L = Gauche / Left / Links / Sinistra / Izquierda
R = Droite / Right / Rechts / Destra / Derecha
NA = Non attribué / Not Available / Nicht verfügbar / Non disponible / No disponible

T = Tambour / Mechanical drum / Strommel / Tamburo / Tambor
= Racing

Scooter

ADLY

	25	Silver Fox	00 - 05	1	3029	SC	T	
	50	Cat	01-	1	3029	SC	T	
	50	Cosy	01-	1	3029	SC	T	
	50	Fox	00 -	1	3029	SC	T	
	50	Fox Plus	01 -	1	3029	SC	T	
	50	Jet	96 -	1	3029	SC	T	
	50	Panther	01-	1	3022	SC	T	
	50	Pista, Pista Twin Light	96 -	1	3029	SC	T	
RT	50	Road Tracer	02 -	1	3029	SC	T	
	50	Silver Fox	00 - 05	1	3029	SC	T	
	50	Silver Fox	06 -	1	3022	SC	T	
	50	Super Sonic	00 -	2	3022	SC	T	
RS	50	Super Sonic	06 -	1	3022	SC	3022	SC
	50	Thunderbike	97 -	1	3022	SC	T	
	70	Fox plus	01 -	1	3029	SC	T	
	70	Pista, Pista Twin Light	01 -	1	3029	SC	T	
	80	Cosy	01 -	1	3029	SC	T	
RT	90	Road Tracer	02 -	1	3029	SC	T	
	100	Cat	01 -	1	3029	SC	T	
	100	Jet	96 -	1	3029	SC	T	
RT	100	Panther	01 -	1	3022	SC	T	
RT	100	Road Tracer	02 -	1	3029	SC	T	
	100	Silver Fox	01 - 05	1	3029	SC	T	
RT	100	Silver Fox	06 -	1	3022	SC	T	
RT	100	Super Sonic	01 -	2	3022	SC	T	
RT	100	Thunderbike	01 -	2	3022	SC	3022	SC

AEON

	50	Aero	06 -	1	3022	SC	T	
	50	Regal	06 -	1	3022	SC	T	
	50	Torch	06 -	1	3022	SC	T	
	90	Regal	06 -	1	3022	SC	T	
	100	Pulsar	06 -	1	3022	SC	T	
	110	Aero	06 -	1	3022	SC	T	
	110	Pulsar	06 -	1	3022	SC	T	

APRILIA

AF-1	50	AE	86 -	1	3004	SC	3037	SC
AF-1	50	Europa / Futura	90 -	1	3004	SC	3037	SC
	50	Amico (All models)	92 -	1	3013	SC	T	
	50	Area 51	98 -	1	3013	SC	3013	SC
	50	Business	97 -	1	3013	SC	T	
	50	Classic	96 -	1	3013	SC	T	
	50	Club	97 -	1	3013	SC	T	
	50	Gulliver / Liquid	95 -	1	3013	SC	T	
	50	Habana	01 -	1	3013	SC	T	
	50	Mc Gulliver	00 -	1	3013	SC	T	
	50	Mojito / Mojito Custom	02 -	1	3013	SC	T	
	50	MX	03 -	1	3031	SC	3037	SC
	50	Netscaper	97 -	1	3013	SC	T	
	50	Racing	98 -	1	3013	SC	3013	SC
	50	Rally	95 -	1	3013	SC	T	
	50	Rally Liquid	96 -	1	3013	SC	T	
	50	Red Rose	90 -	1	3004	SC	T	
	50	Red Rose	88 - 89	1	3034	SC	T	
	50	RS	93 - 95	1	3001	SC	3001	SC
	50	RS	96 - 99	1	3001	SC	3037	SC
	50	RS / RS Replica	00 - 05	1	3031	SC	3037	SC
	50	RS	06 -	1	3057	SC	3015	SC
	50	RS Tuono	03 -	1	3031	SC	3037	SC
	50	RX	06 -	1	3069	SC	3015	SC
	50	RX Racing	04 -	1	3031	SC	3037	SC
	50	RX	90 -	1	3031	SC	3037	SC
	50	Scarabeo	94 - 99	1	3013	SC	T	
	50	Scarabeo (4T)	04 -	1	3064	SC	T	
	50	Scarabeo Ditech	02 -	1	3013	SC	3055	SC
	50	Scarabeo Street	00 -	1	3013	SC	T	
	50	Sonic	99 -	1	3013	SC	T	
	50	SR / SR Liquid	93 -	1	3013	SC	T	
	50	SR Ditech / Racing	00 -	1	3013	SC	3055	SC
	50	SR Stealth	97 -	1	3013	SC	3013	SC
	50	SR Street	05 -	1	3013	SC	3055	SC
	50	SR Replica	94 -	1	3053	SC	T	
	50	SR Replica (Liquid Cooled)	96 -	1	3013	SC	T	
	50	SR Urban Kid	93 -	1	3013	SC	T	
	50	SR Viper	93 -	1	3013	SC	T	
	50	SR WWW	97 -	1	3013	SC	T	
	50	Tuareg	86 -	1	3004	SC	3037	SC
	50	Tuareg Rally	90 -	1	3004	SC	3037	SC
	50	Younger	97 -	1	3013	SC	T	
	100	Scarabeo	00 -	1	3064	SC	T	

APRILIA

	100	Scarabeo (4T)	03 -	1	3064	SC	T	
	100	Scarabeo Net	10 -	1	3064	SC	T	

ATALA

	25	Carosello	97 -	1	3013	SC	T	
AT10	50	Byte	97 -	1	3013	SC	T	
	50	Carosello	97 -	1	3013	SC	T	
	50	Hacker	95 -	1	3013	SC	T	
	50	Skeggia	98 -	1	3013	SC	T	

BAOXIN

BX	125	L	97 -	1	3025	MSC	T	

BARIGO

		Scooter Electric	97 -	1	3015	SC	T	

BENELLI

K2	50	Air / LC / Namur	99 -	1	3013	SC	3013	SC
KB-X	50	Race		1	3029	SC	T	
	50	491	98 -	1	3013	SC	T	
	50	491 RR / Superbike	99 -	1	3013	SC	3013	SC
	50	491 ST	01 -	1	3013	SC	T	
	50	Chrono	92 - 93	1	3004	SC	T	
	50	Chrono	94 -	1	3013	SC	T	
	50	Naked	02 -	1	3013	SC	T	
	50	Nemo / Quadra	94 -	1	3013	SC	T	
	50	Pepe	99 -	1	3013	SC	T	
K2	100	Biposto	99 -	1	3013	SC	T	
LX	100	Pepe	02 -	1	3013	SC	T	
	100	Naked	02 -	1	3013	SC	T	

BETA

RR	50	Enduro	99 -	1	3060	SC	3015	SC
RR	50	Enduro	10 -	1	3060	SC	NA	
RR	50	Enduro Alu	04 - 07	1	3060	SC	3015	SC
RR	50	Supermotard	04 - 07	1	3015	SC	3015	SC
RR	50	Motard Alu	04 -	1	3060	SC	3015	SC
RR	50	Motard Standard	09 - 12	1	3015	SC	3113	SC
RR	50	Motard	09 - 12	1		SC	3113	SC
RR	50	Motard (Spoke Wheels)	09 - 13	1	3031	SC	3113	SC
RR	50	Motard Track (Cast wheels)	08 - 14	1	3031	SC	3113	SC
RR	50	Motard Track (Spoke wheels)	14	1	3031	SC	3113	SC
RR	50	Motard Standard (5 spoke cast w.)	13 - 14	1	3031	SC	3113	SC
RR	50	Motard Sport (5 spoke cast w.)	14 - 15	1	3031	SC	3113	SC
RR	50	Pro Race	98 -	1	3060	SC	3015	SC
RR	50	Motard Skull	11	1	3031	SC	3113	SC
RR	50	Supermotard	08 -	1	3031	SC	3113	SC
RR	50	Standard	99 -	1	3060	SC	3015	SC
RR	50	Supermotard	99 - 03	1	3060	SC	3015	SC
	50	Ark	96 -	1	3013	SC	3013	SC
	50	Ark LC Serie K	98 -	1	3013	SC	3013	SC
	50	Chrono 13	94 -	1	3013	SC	T	
	50	Chrono 502	97 -	1	3001	SC	T	
	50	Eikon	99 - 03	1	3015	SC	3015	SC
	50	Eikon	04 -	1	3013	SC	3055	SC
	50	Quadra	94 - 96	1	3013	SC	T	
	50	Quadra	97 -	1	3001	SC	T	
	50	RK-6	96 -	1	3013	SC	3013	SC
	50	Techno	96 -	1	3015	SC	3015	SC
	50	Tempo	92 - 96	1	3015	SC	T	
	50	Tempo	97 - 98	1	3001	SC	T	
	50	Tempo	99 -	1	3013	SC	T	

BUTALCO

	50	Astro	01 -	1	3069	SC	3015	SC
	50	Lobito	99 -	1	3069	SC	3015	SC

CAGIVA

	50	City	92 - 94	1	3038	SC	T	
	50	City	95 -	1	3039	SC	T	
	50	City	08 -	1	3029	SC	T	
	50	Corsa	98 -	1	3015	SC	T	
	50	Cucciolo	97 -	1	3001	SC	T	
	50	Mantis	99 -	1	3015	SC	T	
	50	Nag	08 -	1	3047	SC	T	
	50	Nuvola	00 -	1	3001	SC	T	

1 - 2 = Nombre de jeux avant / Number of front sets / Anzahl Sets / Numero blister / Numero des juegos
NA = Non attribué / Not Available / Nicht verfügbar / Non disponible / No disponible
T = Tambour / Mechanical drum / Strommel / Tamburo / Tambor

CAGIVA

	50	Progress	98 -	1	3015	SC	T	

CPI

	50	GTR	02	1	3031	SC	NA	
	50	GTR	03 -	1	3057	SC	3013	SC
	50	GTS	02	1	3031	SC	3027	SC
	50	Aragon GP	06 -	1	3047	SC	T	
	50	Freaky	07 -	1	3047	SC	T	
	50	Hussar	01 - 02	1	3022	SC	T	
	50	Hussar	03 -	1	3047	SC	T	
	50	Mars	01 -	1	3022	SC	T	
	50	Olivier	03 -	1	3047	SC	T	
	50	Popcorn	01 - 02	1	3022	SC	T	
	50	Popcorn	03 -	1	3047	SC	T	

DAELIM

	50	A-Four	06 -	1	3078	SC	T	
	50	Besbi	07 -	1	3014	SC	T	
	50	Bonita	09 -	1	3038	SC	T	
	50	Cordi	06 -	1	3018	SC	T	
	50	Delfino	99 -	1	3018	SC	T	
	50	E-Five	03 -	1	3018	SC	T	
	50	History	01 -	1	3018	SC	T	
	50	G Message	98 -	1	3038	SC	T	
	50	Message II	02 -	1	3018	SC	T	
	50	S-Five	01 - 05	1	3018	SC	T	
	50	S-Five	06 -	1	3038	SC	T	
	50	Tapo	99 -	1	3018	SC	T	
	50	Vivo	99 -	1	3018	SC	T	
	100	Delfino	99 -	1	3018	SC	T	

DERBI

DS	50		88	1	3015	SC	T	
FDX	50		89	1	3015	SC	T	
GP	50		01 -	1	3015	SC	T	
GP1	50		01 - 04	1	3015	SC	3015	SC
GP1	50		05 -	1	3057	SC	3015	SC
GPR	50	Nude	05 -	1	3057	SC	3015	SC
GPR	50	Racing	05 -	1	3057	SC	3015	SC
GPR	50	R	98 - 04	1	3069	SC	3015	SC
	50	Aceno	98 -	1	3015	SC	T	
	50	Atlantis	99 -	1	3015	SC	T	
	50	Atlantis (4T) / Bullet	04 -	1	3015	SC	T	
	50	Atlantis H2O / Wave	01 -	1	3015	SC	T	
	50	Aventura	95 -	1	3015	SC	T	
	50	Black Devil	04 -	1	3031	SC	3015	SC
	50	DRD Pro Corse	06 -		NA		3015	SC
	50	Easy	96 -	1	3015	SC	T	
	50	Fenix	94 -	1	3015	SC	3015	SC
	50	Furax	95 -	1	3015	SC	3015	SC
	50	Hunter	97 -	1	3015	SC	T	
	50	Manhattan	99 -	1	3015	SC	T	
	50	Paddock	96 -	1	3015	SC	T	
	50	Predator LC	98 -	1	3015	SC	3015	SC
	50	Predator O2	00 -	1	3015	SC	3015	SC
	50	Rambla	06 -	1	3015	SC	3015	SC
	50	R DRD	05 -	1	3031	SC	3015	SC
	50	R Racer	05 -	1	3015	SC	3015	SC
	50	R X-Treme	05 -	1	3015	SC	3015	SC
	50	Savanah	91 -	1	3015	SC	T	
	50	Senda L	99 -	1	3015	SC	3015	SC
	50	Senda R / X-Treme	94 - 04	1	3015	SC	3015	SC
	50	Senda R DRD	03 - 04	1	3069	SC	3015	SC
	50	Senda SM / X-Treme	99 - 04	1	3015	SC	3015	SC
	50	Senda SM DRD	03 - 04	1	3015	SC	3015	SC
	50	Senda SM DRD Black Ed	03 -	1	3031	SC	3015	SC
	50	SM DRD / Racer	05 -	1	3031	SC	3015	SC
	50	SM X-Treme / X-Race	05 -	1	3031	SC	3015	SC
	50	Stinger	96 -	1	3015	SC	T	
	50	Urban	94 -	1	3015	SC	T	
	50	Vamos R (Brembo)	95 -	1	3013	SC	T	
	50	Vamos R / L / FL	95 -	1	3015	SC	T	
	50	Variant Sport R	01 -	1	3015	SC	T	
	100	Atlantis (4T)	04 -	1	3015	SC	T	
	100	Atlantis O2 / H2O	01 -	1	3015	SC	T	

FACTORY

RP	50	Desert	04 -	1	3031	SC	3015	SC
SM	50	Chrono	04 -	1	3031	SC	3015	SC

FACTORY

SP	50	Chrono	04 -	1	3031	SC	3015	SC
YR	50	Desert	04 -	1	3031	SC	3015	SC

FANTIC

	50	Big Wheel	94 -	1	3029	SC	3012	SC
	50	Fast		1	3004	SC	T	
	50	Grinta	95 -	1	3029	SC	3012	SC
	50	Leader	95 -	1	3029	SC	3012	SC
	50	Oasis	90 -	1	3004	SC	3037	SC
	50	Pony SR	93 -	1	3029	SC	T	
	50	Queenie	95 -	1	3029	SC	T	
	50	Regolarna Casa	08 -	1	3031	SC	3022	SC
	50	Supersei Motard	08 -	1	3031	SC	3022	SC

GARELLI

CPR	50		02 -	1	3029	SC	T	
FX	50		02 -	1	3029	SC	T	
KRS	50		02 -	1	3039	SC	T	
PMX	50	Rally	00 -	1	3029	SC	T	
PMX	50	Sport	00 -	1	3039	SC	T	
SR	50	Pony	95 -	1	3029	SC	T	
	50	Flo	00 -	1	3013	SC	T	
	50	Starter	02 -	1	3029	SC	T	

GAS GAS

EC	50	Rookie	05 -	1	3031	SC	NA	
EC	50	Rookie	01 - 04	1	3069	SC	NA	
SM	50	Rookie	01 -	1	3069	SC	NA	

GENERIC

	50	Ideo	06 -	1	3047	SC	T	
	50	Roc	08 -	1	3047	SC	NA	
	50	Stroke	08 -	1	3047	SC	NA	
	50	Toxic	07 -	1	3031	SC	3013	SC
	50	Trigger SM	06 -	1	3031	SC	3013	SC
	50	Trigger SM Competition	08 -	1	3031	SC	3013	SC
	50	Trigger X	06 -	1	3031	SC	3013	SC
	50	Trigger X Competition	08 -	1	3031	SC	3013	SC
	50	XOR	06 -	1	3047	SC	T	

GILERA

DNA	50	(Grimeca caliper)	00 -	1	3031	SC	3043	SC
DNA	50	(Hengtong caliper)	00 -	1	3060	SC	3043	SC
GSM	50	Supermotard	01 -	1	3015	SC	3015	SC
NRG	50		94 -	1	3013	SC	T	
R	50		96 -	1	3034	SC	NA	
RCR	50		04 -	1	3015	SC	3015	SC
SMT	50		04 -	1	3015	SC	3015	SC
	50	503	91 -	1	3034	SC	3034	SC
	50	Bullit	90 -	1	3034	SC	T	
	50	Eaglet	97 -	1	3013	SC	3022	SC
	50	Easy moving	96 -	1	3045	SC	T	
	50	H@k	99 -	1	3015	SC	3015	SC
	50	Ice	02 -	1	3013	SC	T	
	50	RCR	11 -	1	3022	SC	3022	SC
	50	Runner	97	1	3013	SC	T	
	50	Runner	98 - 05	1	3013	SC	3043	SC
	50	Runner PJ	06 -	1	3031	SC	3043	SC
	50	Runner SP	01 - 05	1	3013	SC	3043	SC
	50	Runner SP	06 -	1	3031	SC	3043	SC
	50	SMT	11 -	1	3022	SC	3022	SC
	50	Stalker	97 -	1	3013	SC	3043	SC
	50	Stalker (Heng Tong Caliper)	03 - 11	1	3022	SC	3043	SC
	50	Storm	94 -	1	3013	SC	T	
	50	Typhoon	93 - 95	1	3013	SC	T	
	50	Typhoon	96 -	1	3045	SC	T	
	50	Zulu	01 -	1	3015	SC	3015	SC
	70	Runner Malossi	98 -	1	3013	SC	3013	SC
	80	Typhoon	95 -	1	3013	SC	T	

HERCULES

	50	Gipsy / Splinter / Reggae	95 -	1	3013	SC	T	

HERO ENVOY

	50		99 -	1	3015	SC	NA	

1 - 2 = Nombre de jeux avant / Number of front sets / Anzahl Sets / Numero blister / Numero des juegos
NA = Non attribué / Not Available / Nicht verfügbar / Non disponible / No disponible
T = Tambour / Mechanical drum / Strommel / Tamburo / Tambor

HONDA

	50	Formula	94 -	1	3013	SC	T	
	50	Giorno	92 -	1	3038	SC	T	
	50	Jazz	92 -	1	3038	SC	T	
	50	Sky Classic	00 -	1	3013	SC	T	
	50	Sky Vetro	00 -	1	3013	SC	T	
	50	Tact S	93 -	1	3038	SC	T	
GP	50	Dio	89 -	1	3038	SC	T	
HSC	50	ZR / 01 Scooter	92	1	3038	SC	T	
NH	50	Lead	86 - 93	1	3009	SC	T	
NH	50	Lead	94 -	1	3014	SC	T	
NSC	50	Vision	10 -	1	3102	SC	T	
SC	50	1-ZX	92 -	1	3018	SC	T	
SFX	50	Sport	95 - 04	1	3013	SC	T	
SGX	50	Sky	97 - 03	1	3013	SC	T	
SH	50	T / Fifty / Scoopy	97 - 03	1	3013	SC	T	
SJ	50	Bali	93 - 99	1	3020	SC	T	
SP	50		- 91	1	3018	SC	T	
SP	50		92 -	1	3038	SC	T	
SR	50	Super Dio	91 - 92	1	3038	SC	T	
SR	50	Dio	93 -	1	3038	SC	T	
SRX	50	Shadow	98 -	1	3006	SC	T	
SXR	50		98 -	1	3013	SC	T	
SZX	50	X8R-S / X8R-X	98 -	1	3013	SC	3041	SC
ZX	50	Super Dio	92 -	1	3038	SC	T	
	75	Yupy	90 -	1	3006	SC	T	
NH	80	Lead Scooter	86 -	1	3009	SC	T	
R	80	Lead	88 -	1	3009	SC	T	
NH	90	Yupy	90 - 94	1	3014	SC	T	
SRX	90	Shadow	98 -	1	3006	SC	T	
	100	Lead	00 -	1	3019	SC	T	
EX	100	Bali	96 -	1	3020	SC	T	
SJ	100	Bali	97 -	1	3020	SC	T	
NSC	110	Vision	10 -	1	3102	SC	T	

HRD

	50	Sonic 2 Supermotard	00 - 02	1	3069	SC	3015	SC
	50	Sonic 2 Trail	00 - 02	1	3069	SC	3015	SC

HUSQVARNA

	50	SM	02 -	1	3069	SC	3015	SC
	50	WR	02 -	1	3069	SC	3015	SC

HYOSUNG

SB	50		00 -	1	3022	SC	T	
SD	50		00 -	1	3022	SC	T	
SF	50		99 -	1	3022	SC	T	
	50	Avanti	99 -	1	3022	SC	T	
	50	Rush	97 -	1	3022	SC	T	
	50	Sense	98 -	1	3022	SC	T	
	50	Super Cab	95 -	1	3022	SC	T	
	50	Super Cab Plus	98 -	1	3022	SC	T	
EZ	100		00 -	1	3022	SC	T	
	100	Cab	98 -	1	3022	SC	T	
FX	110		02 -	1	3022	SC	T	
KR	110	Master	04 -	1	3022	SC	T	
	110	Midas Plus	98 -	1	3022	SC	T	

ITALJET

SM	50		02 -	1	3069	SC	NA	
	50	Bazooka	93 -	1	3029	SC	T	
	50	Cruise	95 -	1	3029	SC	T	
	50	Dragster	99 -	1	3015	SC	3015	SC
	50	Formula	94 -	1	3013	SC	3013	SC
	50	Formula Air	99 -	1	3015	SC	3015	SC
	50	Formula LC	98 -	1	3015	SC	3015	SC
	50	Formula Race	95 -	1	3015	SC	3015	SC
	50	Jet Set	03 -	1	3063	SC	T	
	50	Pista 2	93 -	1	3029	SC	T	
	50	Rollercraft	08 -	1	3019	SC	T	
	50	Scoop	93 -	1	3029	SC	T	
	50	Torpedo	97 -	1	3015	SC	T	
	50	Torpedo (4T)	01 -	1	3015	SC	T	
	50	Velocifero	94 -	1	3015	SC	T	
	50	Yankee 8	94 -	1	3029	SC	3029	SC
SX1	50		08 -	1	3047	SC	T	
	80	Formula	94 -	1	3013	SC	3013	SC

JONWAY

YY	50	QT-6 Agility (2T / 4T)	07 - 09	1	3096	SC	T	
YY	50	QT-10 Viper (2T / 4T)	07 - 09	1	3096	SC	T	
YY	50	QT-28 Raptor (2T / 4T)	07 - 09	1	3096	SC	T	
YY	80	QT-6 Agility (4T)	07 - 09	1	3096	SC	T	

KEEWAY

	50	Focus	06 -	1	3047	SC	T	
	50	Matrix	06 -	1	3047	SC	T	
	50	Matrix Electric	10 -	1	3047	SC	T	
	50	Matrix Racing Sport	10 -	1	3047	SC	T	
F-NKD	50		10 -	1	3047	SC	T	
RY8	50		07 - 09	1	3047	SC	T	
RY8	50		10 -	1	3047	SC	3096	SC
TX	50	SM	10 -	1	3031	SC	3037	SC
	50	F-Act	07 -	1	3047	SC	T	
	50	Flash	07 -	1	3022	SC	T	
	50	Flash Electric	10 -	1	3047	SC	T	
	50	Hurricane	06 -	1	3022	SC	T	
	90	Hurricane	06 -	1	3022	SC	T	
	100	Partner	06 -	1	3078	SC	T	
	110	Partner	06 -	1	3078	SC	T	

KREIDLER

	25	Florett XL	99 -	1	3022	SC	T	
	50	Florett	99 -	1	3022	SC	T	

KTM

	50	GO	94 -	1	3004	SC	T	
	50	Comet PL / TS / RLW / RS	86 - 91	1	3013	SC	T	

KYMCO

	50	Active SR	08 -	1	3096	SC	T	
	50	Agility	05 -	1	3078	SC	T	
	50	Agility (4T) RT10 / RT12	06 -	1	3078	SC	T	
	50	Agility (4T) RT16	06 -	1	3068	SC	T	
	50	B&W	04 -	1	3062	SC	T	
	50	Calypso	97 -	1	3047	SC	T	
	50	Cobra Cross	99 - 00	1	3014	SC	T	
	50	Cobra Cross	01 -	1	3006	SC	T	
	50	Cobra Exclusive	01 -	1	3006	SC	T	
	50	Cobra Racer	99 - 00	1	3014	SC	T	
	50	Cobra Racer	01 -	1	3006	SC	T	
	50	Dink / Dink Sport	99 -	1	3062	SC	T	
	50	Easy	01 -	1	3006	SC	T	
	50	Filly LX	01	1	3006	SC	T	
	50	Filly LX	02 -	1	3078	SC	T	
	50	Heroism	95 - 96	1	3006	SC	T	
	50	Heroism	97 -	1	3047	SC	T	
	50	Jetix	10 -	1	3096	SC	3078	SC
	50	Manboy	95 -	1	3009	SC	T	
	50	New Dink	08 -	1	3062	SC	T	
	50	Nexxon	08 -	1	3096	SC	3096	SC
	50	People	99 -	1	3068	SC	T	
	50	Scout	95 -	1	3006	SC	T	
	50	Spacer	99 -	1	3062	SC	T	
	50	Super 8	08 -	1	3068	SC	T	
	50	Super 9	00 - 01	1	3006	SC	T	
	50	Super 9 A/C	02 -	1	3062	SC	T	
	50	Super 9 L/C	02 -	1	3062	SC	3068	SC
	50	Top Boy On/Off Road	96 -	1	3006	SC	T	
	50	Top Boy Racer / Cross	01 -	1	3006	SC	T	
	50	Vitality	04 -	1	3078	SC	T	
	50	Yager	01 -	1	3062	SC	T	
	50	Yup	01	1	3006	SC	T	
	50	Yup	02 -	1	3078	SC	T	
	50	Zap	95 -	1	3009	SC	T	
	50	ZX12	06 -	1	3014	SC	T	
CX	50	Curio Super	94 -	1	3006	SC	T	
DD	50	Sniper	94 -	1	3006	SC	3041	SC
K12	50		95 -	1	3006	SC	T	
KB	50		95 -	1	3006	SC	T	
ZX	50	Fever	96 -	1	3006	SC	T	
ZX	50	Super Fever	02 -	1	3006	SC	T	
RS	50	Agility Naked	10 -	1	3078	SC	T	
SP	90	Yup	95 -	1	3009	SC	T	
	90	Man Boy	96 -	1	3014	SC	T	
KB	100		99 -	1	3006	SC	T	
	100	Cobra Racer	99 -	1	3062	SC	T	
	100	Spike	00 - 06	1	3096	SC	T	

1 - 2 = Nombre de jeux avant / Number of front sets / Anzahl Sets / Numero blister / Numero des juegos
NA = Non attribué / Not Available / Nicht verfügbar / Non disponible / No disponible
T = Tambour / Mechanical drum / Strommel / Tamburo / Tambor

KYMCO

	100	Top Boy On/Off Road	99 -	1	3006	SC	T	
	110	Spike	00 - 06	1	3096	SC	T	

LEM

	50	Flash	94 -	1	3029	SC	T	

MACAL

	50	Flash	99 -	1	3013	SC	T	
	50	Trophy	99 -	1	3015	SC	T	
	50	Trophy H2O	99 -	1	3015	SC	T	

MAICO

	50	Cruiser	99 -	1	3022	SC	T	
	50	Thunderbike I / II	99 -	1	3022	SC	T	
	50	Trafficjammer	99 -	1	3022	SC	T	
R-1	50	Superbike	99 -	1	3022	SC	T	

MALAGUTI

	50	Centro	93 -	1	3004	SC	T	
	50	Centro SL	98 -	1	3013	SC	T	
	50	Ciak	00 -	1	3013	SC	T	
	50	Ciak Twin Disk	02 -	1	3013	SC	3013	SC
	50	Evolution	91 -	1	3037	SC	T	
ES	50	Dune	89 -	1	3037	SC	3037	SC
	50	Fifty Full / CX / Top	85 -	1	3034	SC	T	
	50	Fifty Mistral	90 -	1	3034	SC	T	
	50	Fifty	04 -	1	3031	SC	3015	SC
	50	Yesterday	97 -	1	3013	SC	T	
CH	50		86 -	1	3031	SC	T	
CR 1	50	Crosser	95 -	1	3034	SC	T	
EL	50	Crosser	97 -	1	3013	SC	T	
F-10	50	Jet-Line	94 -	1	3013	SC	T	
F-10	50	Timemachine	03 -	1	3013	SC	T	
F-10	50		92 - 93	1	3024	SC	T	
F-10	50	WAP	02 -	1	3013	SC	T	
F-12	50	Phantom	94 - 98	1	3034	SC	T	
F-12	50	Phantom (Liquid Cooled)	94 - 98	1	3004	SC	T	
F-12	50	Phantom (Air Cooled)	99 -	1	3013	SC	T	
F-12	50	Phantom (Liquid Cooled)	99 -	1	3013	SC	3013	SC
F-12	50	Phantom Digit	02 -	1	3013	SC	3013	SC
F-12	50	Racing Life LC / Tyre Track	03 -	1	3013	SC	3013	SC
F-15	50	Fire Fox	96 - 99	1	3034	SC	T	
F-15	50	Fire Fox (Liquid Cooled)	96 - 99	1	3004	SC	T	
F-15	50	Fire Fox	01 -	1	3013	SC	T	
F-15	50	Fire Fox LC	01 -	1	3013	SC	3013	SC
F-15	50	Mechatronic	03 -	1	3013	SC	3013	SC
NKD	50	Drakon	06 -	1	3057	SC	3015	SC
RST	50	Sport	87 -	1	3034	SC	3034	SC
XSM	50		04 -	1	3031	SC	3015	SC
XTM	50		04 -	1	3015	SC	3015	SC
	100	Ciak	00 -	1	3013	SC	3013	SC
F-12	100	Phantom	00 -	1	3013	SC	T	
F-12	100	Phantom Twin Disk	02 -	1	3013	SC	3013	SC

MBK

	50	Booster 12"	03 -	1	3013	SC	T	
	50	Booster Naked	04 -	1	3013	SC	T	
	50	Booster NG	95 -	1	3013	SC	T	
	50	Booster Road	94 - 95	1	3013	SC	T	
	50	Booster Rocket	96 -	1	3013	SC	T	
	50	Booster Spirit	96 -	1	3013	SC	T	
	50	Booster Track	96 -	1	3013	SC	T	
	50	Equalis	95 -	1	3013	SC	T	
	50	Evolis	92 -	1	3013	SC	T	
	50	Fizz	94 -	1	3013	SC	T	
	50	Forte	94 - 95	1	3013	SC	T	
	50	Flipper	98 -	1	3013	SC	T	
	50	Mach G	03 -	1	3013	SC	T	
	50	Nitro	97 -	1	3013	SC	3027	SC
	50	Ovetto	97 -	1	3013	SC	T	
	50	Ovetto (4T)	09 -	1	3013	SC	T	
	50	Stunt	99 -	1	3027	SC	T	
	50	Target	92 -	1	3029	SC	T	
	50	X-Limit	98 - 03	1	3004	SC	T	
	50	X-Limit	04 -	1	3015	SC	3063	SC
	50	X-Limit Supermotard	04 -	1	3031	SC	3063	SC
	50	X-Power	98 - 03	1	3036	SC	3008	SC
	50	X-Power	04 -	1	3031	SC	3015	SC

MBK

	80	Evolis	94 -	1	3013	SC	T	
	100	Booster	01 -	1	3008	SC	T	
	100	Nitro	01 -	1	3013	SC	3027	SC
	100	Ovetto	01 -	1	3013	SC	T	

MH (MOTORHISPANIA)

MH	50	Furia 6v	99 -	1	3015	SC	3015	SC
MH	50	Furia Max	06 -	1	3015	SC	3015	SC
MH	50	Urban Bike	06 -	1	3031	SC	3015	SC
RX	50	Racing	00 -	1	3069	SC	3015	SC
RYZ	50	Enduro	05 -	1	3015	SC	3015	SC
RYZ	50	Supermotard	05 -	1	3069	SC	3015	SC

MOTRON

	50	Spike	97 -	1	3013	SC	T	
	50	Sting	95 -	1	3013	SC	T	
	50	Syncro	97 -	1	3013	SC	T	
	50	Thunder	95 -	1	3013	SC	T	

MZ / MUZ

	50	Moskito	99 - 02	1	3022	SC	T	
	50	Moskito FB	97 - 03	1	3029	SC	T	
	50	Moskito SX JP50	00 - 03	1	3029	SC	T	

PEUGEOT

SV	50	Executive	95 -	1	3047	SC	T	
SV	50	L	93 -	1	3006	SC	T	
SV	50	Rolland Garros	93 -	1	3024	SC	T	
SV	50	Geo	91 -	1	3006	SC	T	
SV	50	T	93 -	1	3024	SC	T	
SV	50	Sport	93 -	1	3024	SC	T	
XP S6	50	Street / Super Motard	04 -	1	3031	SC	3015	SC
XP6	50	Enduro	03 - 10	1	3015	SC	3015	SC
XP6	50	Supermotard	03 - 09	1	3015	SC	3015	SC
XP6	50	Trail	04 - 05	1	3015	SC	3015	SC
XPS	50	Track / Enduro	03 - 09	1	3015	SC	3015	SC
XPS	50	Street / Top Road	03 - 09	1	3031	SC	3015	SC
XPS	50	Super Motard	03 - 10	1	3031	SC	3015	SC
XR-6	50		02 - 07	1	3069	SC	3015	SC
	50	Buxy (AJP caliper)	94 -	1	3015	SC	T	
	50	Buxy (Brembo caliper)	94 - 97	1	3013	SC	T	
	50	Buxy (Hengtong caliper)	94 -	1	3022	SC	T	
	50	Citystar	13 -	1	3060	MSC	3055	MSC
	50	Django Allure (2T / 4T)	14 -	1	3078	SC	T	
	50	Django Evasion (2T / 4T)	14 -	1	3078	SC	T	
	50	Django Heritage (2T / 4T)	14 -	1	3078	SC	T	
	50	Django Sport (2T / 4T)	14 -	1	3078	SC	T	
	50	Elyséo	02 -	1	3015	SC	3015	SC
	50	Elyséo (AJP caliper)	98 - 01	1	3015	SC	T	
	50	Elyséo (Hengtong caliper)	98 -	1	3022	SC	T	
	50	Elystar	02 - 07	1	3015	SC	3063	SC
	50	Elystar Advantage	02 - 07	1	3015	SC	3015	SC
	50	Jet C-Tech	09 -	1	3015	SC	3015	SC
	50	Jet Force	03 -	1	3015	SC	3015	SC
	50	Jet Force H2I	11 -	1	3015	SC	3015	SC
	50	Kisbee (4T)	10 -	1	3022	SC	T	
	50	Looxor	02 - 05	1	3015	SC	T	
	50	Looxor	06 -	1	3015	SC	3015	SC
	50	Ludix (All models 10")	04 - 09	1	3015	SC	T	
	50	Ludix 2 Trend 12"	07 - 10	1	3015	SC	T	
	50	Ludix Blaster RCUP	09 -	1	3015	SC	3015	SC
	50	Ludix Blaster RS12	09 -	1	3015	SC	T	
	50	Ludix Blaster Furious	09 -	1	3015	SC	3015	SC
	50	Ludix Elegance 14"	04 - 09	1	3015	SC	T	
	50	Metal-X (All models)	03 - 06	1	3015	SC	T	
	50	Speedake (AJP caliper)	94 -	1	3015	SC	T	
	50	Speedake (Brembo caliper)	94 - 97	1	3013	SC	T	
	50	Speedake (Hengtong caliper)	94 -	1	3022	SC	T	
	50	Speedfight LC (AJP caliper)	96 - 00	1	3015	SC	T	
	50	Speedfight LC (Brembo caliper)	96 - 00	1	3013	SC	T	
	50	Speedfight LC (Hengtong caliper)	96 - 00	1	3022	SC	T	
	50	Speedfight 2 Air Cooled	01 - 08	1	3015	SC	T	
	50	Speedfight 2 Liquid Cooled	01 - 08	1	3015	SC	3015	SC
	50	Speedfight 2 Furious/WRC/X-Race	03 - 08	1	3015	SC	3015	SC
	50	Speedfight 3 Air Cooled	09 -	1	3096	SC	T	
	50	Speedfight 3 Liquid Cooled	09 -	1	3096	SC	3057	SC
	50	Speedfight 3 RS	09 -	1	3096	SC	3057	SC
	50	Squab (AJP caliper)	94 -	1	3015	SC	T	
	50	Squab (Hengtong caliper)	94 -	1	3022	SC	T	

1 - 2 = Nombre de jeux avant / Number of front sets / Anzahl Sets / Numero blister / Numero des juegos
NA = Non attribué / Not Available / Nicht verfügbar / Non disponible / No disponible
T = Tambour / Mechanical drum / Strommel / Tamburo / Tambor

PEUGEOT

	50	Streetzone 12	14 -	1	3015	SC	T	
	50	TKR / TKR WRC	05 -	1	3015	SC	T	
	50	TKR Street Zone / WRC	03 -	1	3015	SC	T	
	50	Trekker Metal X	01 -	1	3015	SC	T	
	50	Trekker Off Road (Hengtong caliper)	98 -	1	3022	SC	T	
	50	Trekker Road (AJP caliper)	98 -	1	3015	SC	T	
	50	Trekker Street Board	00 -	1	3015	SC	T	
	50	Trekker Urban Black	00 -	1	3015	SC	T	
	50	Tweet (4T)	10 -	1	3039	SC	T	
	50	V-Clic (4T)	08 -	1	3029	SC	NA	
	50	Vivacity (AJP caliper)	99 - 07	1	3015	SC	T	
	50	Vivacity (Hengtong caliper)	05 -	1	3022	SC	T	
	50	New Vivacity (2T / 4T)	08 - 13	1	3018	SC	T	
	50	Zenith Luxe	94 -	1	3013	SC	T	
	50	Zenith (Grimeca caliper)	96 -	1	3013	SC	T	
	50	Zenith (Hengtong caliper)	96 -	1	3022	SC	T	
	50	Zenith LS	96 - 99	1	3015	SC	T	
SV	80		95 -	1	3047	SC	T	
SV	80	Geo	91 -	1	3006	SC	T	
SV	100		91 -	1	3006	SC	T	
	100	Elyséo (AJP caliper)	98 - 01	1	3015	SC	T	
	100	Elyséo	02 -	1	3015	SC	3015	SC
	100	Kisbee (4T)	12 - 14	1	3022	SC	T	
	100	Looxor	01 - 04	1	3015	SC	3015	SC
	100	Speedfight LCA (Brembo caliper)	97 -	1	3013	SC	T	
	100	Speedfight (AJP caliper)	97 -	1	3015	SC	3015	SC
	100	Speedfight (Hengtong caliper)	97 -	1	3022	SC	T	
	100	Speedfight 2 Furious/WRC/X-Race	03 -	1	3015	SC	3015	SC
	100	Squab	98 -	1	3015	SC	3015	SC
	100	Streetzone 100 (4T)	14 -	1	3015	SC	T	
	100	Trekker Road	98 -	1	3015	SC	T	
	100	Vivacity (AJP caliper)	99 - 07	1	3015	SC	T	
	100	Vivacity (Hengtong caliper)	05 -	1	3022	SC	T	

PGO

PMX	50		98 -	1	3029	SC	T	
PMS	50		99 -	1	3039	SC	T	
PMX	50	Sport	01 -	1	3039	SC	T	
PMX	50	Naked	06 -	1	3039	SC	T	
PS	50		93 -	1	3022	SC	T	
	50	Big Max	94 - 02	1	3029	SC	T	
	50	Big Max	03 -	1	3022	SC	T	
	50	Big Max Sport	96 -	1	3029	SC	T	
	50	Comet	93 -	1	3029	SC	T	
	50	Comet Sport	91 -	1	3022	SC	T	
	50	Dr. Big	01 -	1	3039	SC	T	
	50	EPS	96 -	1	3029	SC	T	
	50	Galaxy	91 -	1	3022	SC	T	
	50	G-max	06 -	1	3039	SC	T	
	50	G-max Doppler	06 -	1	3013	SC	T	
	50	Hot	97 -	1	3029	SC	T	
	50	Libra	10 -	1	3039	SC	T	
	50	Ligero	06 -	1	3039	SC	T	
	50	Mega	96 -	1	3029	SC	T	
	50	Road 66	95 -	1	3022	SC	T	
	50	Rodoshow	01 -	1	3013	SC	T	
	50	Tornado	96 -	1	3029	SC	T	
	50	T-Rex	99 -	1	3039	SC	T	
	50	T-Rex 3	02 -	1	3019	SC	T	
	80	1.25 Big Max	94 -	1	3029	SC	T	
	90	Big Max	96 -	1	3029	SC	T	
	90	Galaxy	92 -	1	3022	SC	T	
	90	Rodoshow	02 -	1	3013	SC	T	
	90	Tornado	00 -	1	3029	SC	T	
	100	Big Max	94 -	1	3029	SC	T	
	100	My Bubu	02 -	1	3039	SC	T	
PMX	110		00 -	1	3029	SC	T	
	110	T-Rex	99 -	1	3039	SC	T	

PIAGGIO

	25	Zip II Cat DT	01 -	1	3045	SC	T	
	50	Diesis	02 -	1	3015	SC	T	
	50	Fly	05 -	1	3060	SC	T	
	50	Free	93 - 96	1	3045	SC	T	
	50	Free	97 -	1	3013	SC	T	
	50	Liberty	97 -	1	3043	SC	T	
	50	Liberty (4T)	00 -	1	3043	SC	T	
	50	NTT	95	1	3013	SC	T	
	50	Quartz	92 -	1	3053	SC	T	
	50	Sfera RST	95 -	1	3045	SC	T	
	50	Storm	94 - 95	1	3013	SC	T	

PIAGGIO

	50	Storm	96 -	1	3045	SC	T	
	50	Typhoon	93 - 95	1	3013	SC	T	
	50	Typhoon	96 -	1	3045	SC	T	
	50	Typhoon	06 -	1	3022	SC	T	
	50	Typhoon (2T) 12" Wheels	10 - 13	1	3060	SC	T	
	50	Typhoon Catalysed	02 -	1	3013	SC	3013	SC
	50	Zip & Zip	94 -	1	3013	SC	T	
	50	Zip Fast Rider	93 - 95	1	3013	SC	T	
	50	Zip Fast Rider	96 -	1	3043	SC	T	
	50	Zip RST	96 - 99	1	3043	SC	T	
	50	Zip SP / Disco	96 -	1	3043	SC	T	
	50	Zip II	01 -	1	3045	SC	T	
	50	Zip II Cat DT	01 -	1	3045	SC	T	
ET2	50		97 - 01	1	3043	SC	T	
ET2	50		02 -	1	3043	SC	T	
ET4	50		00 -	1	3043	SC	T	
LX	50	(2T / 4T)	05 -	1	3043	SC	T	
LXV	50		08 -	1	3013	SC	T	
NRG.1	50		94 - 95	1	3013	SC	T	
NRG	50		96 - 00	1	3013	SC	T	
NRG	50	Extreme	01 -	1	3013	SC	3043	SC
NRG	50	MC 2	96 - 97	1	3013	SC	T	
NRG	50	MC 2	98 - 02	1	3013	SC	3043	SC
NRG	50	MC 3 DD / DT	02 -	1	3013	SC	3013	SC
NRG	50	Power DD	05	1	3013	SC	3013	SC
NRG	50	Power DD	06 -	1	3022	SC	3013	SC
NRG	50	Purejet	05	1	3013	SC	3013	SC
NRG	50	Purejet	06 -	1	3022	SC	3013	SC
NRG	50	Silver Bullett	10	1	3022	SC	3013	SC
NTT	50		96 -	1	3045	SC	T	
S	50	(2T)	07 -	1	3043	SC	T	
S	50	(4T)	09 -	1	3043	SC	T	
TPH	50		93 - 95	1	3013	SC	T	
TPH	50		96 -	1	3045	SC	T	
	80	Skipper	93 - 95	1	3053	SC	T	
	80	Skipper	96 -	1	3045	SC	T	
	80	Typhoon	96 -	1	3045	SC	T	
	100	Diesis	02 -	1	3015	SC	T	
	100	Free	02 -	1	3013	SC	T	
	100	Zip	07 -	1	3060	SC	T	

QUINGOI

QM	125	2V	02 -	1	3025	MSC	T	
QM	125	GY	02 -	1	3087	MSC	T	

RIEJU

	50	FD4 Super Marathon	85	1	3015	SC	T	
	50	First / H2O	97 -	1	3015	SC	T	
MRT	50	Pro (Radial / Double single caliper)	09 - 10	1	3057	SC		
MRT	50	Supermotard (Radial cal. / Cast wheel)	09 - 10	1	3057	SC	3012	SC
MRX	50	Castrol	01 - 02	1	3069	SC	3015	SC
MRX	50		03 - 08	1	3015	SC	3015	SC
MRX	50	Pro / Top	04 - 08	1	3031	SC	3015	SC
RR	50	Thunderfire	97 - 02	1	3015	SC	3015	SC
RR	50	Castrol	00 - 02	1	3069	SC	3015	SC
RR	50	Sport	03 - 06	1	3015	SC	3015	SC
RRX	50	Spike (17" wheel / Spoke wheel)	03 - 08	1	3015	SC	3015	SC
RRX	50	Spike (17" Cast wheel)	06 - 09	1	3015	SC	3015	SC
RRX	50		06 - 09	1	3015	SC	3015	SC
RS1	50		97 - 00	1	3015	SC	3015	SC
RS1	50		01 -	1	3069	SC	3015	SC
RS2	50	FR	09 - 10	1	3080	MSC	3012	SC
RS2	50	Matrix (AJP caliper)	02 - 08	1	3081	SC	3015	SC
RS2	50	Matrix (J.Juan caliper)	07 - 09	1	3080	MSC	3015	SC
RS2	50	Pro (J.Juan caliper)	07 - 10	1	3080	MSC	3015	SC
RS2	50	Pro (AJP caliper)	06 - 10	1	3031	SC	3015	SC
RS2	50	NKD	05	1	3031	SC	3015	SC
	50	NKD	07	1	3081	SC	3015	SC
	50	NKD	08 - 10	1	3080	SC	3012	SC
	50	Pacific (4T)	08	1	3047	SC	T	
SMX	50		02 - 06	1	3015	SC	3015	SC
SMX	50	Pro Supermotard / Top	04 - 07	1	3031	SC	3015	SC
SMX	50	Pro Street (Cast wheel)	06 - 08	1	3031	SC	3015	SC
SMX	50	(Cast wheel)	07 - 08	1	3015	SC	3015	SC
	50	Spike	04 - 06	1	3015	SC	3015	SC
	50	Spike pro	04	1	3069	SC	3015	SC
	50	Spike X50	06 - 07	1	3015	SC	3015	SC
	50	Tango	07 - 10	1	3057	SC	3015	SC
	50	Tango Motard	09 - 10	1	3012	SC	3015	SC
	50	Toreo (4T)	07 - 08	1	3047	SC	T	
	75	K6 / P6	87	1	3015	SC	T	

1 - 2 = Nombre de jeux avant / Number of front sets / Anzahl Sets / Numero blister / Numero des juegos
NA = Non attribué / Not Available / Nicht verfügbar / Non disponible / No disponible
T = Tambour / Mechanical drum / Strommel / Tamburo / Tambor

REIJU

RST	80		91 -	1	3015	SC	3015	SC

ROXON

	50	DUEL SM	06 -	1	3015	SC	3015	SC
	50	DUEL TT	06 -	1	3015	SC	3015	SC

SACHS

	50	Bee	08 - 10	1	3008	SC	T	
	50	Madass (2T)	04 - 05	1	3096	SC	3015	SC
	50	Madass (4T)	04 - 05	1	3096	SC	3015	SC
	50	Madass (4T)	06 - 09	1	3096	SC	3018	SC
	50	Speedforce	08	1	3047	SC	T	
	50	Speedjet	08	1	3047	SC	T	
	50	49ER 12	08	1	3047	SC	T	
	50	SX-1 (2T)	08 - 09	1	3047	SC	T	

SHE-LUNG

	50	Falcon	97 -	1	3029	SC	T	
	50	Racer	96 -	1	3013	SC	T	

SHERCO

	50	Enduro (2T)	02 - 07	1	3069	SC	3015	SC
	50	Enduro (2T) / Urban / SU (Spoke wheel)	08 - 10	1	3069	SC	3063	SC
	50	SE - R / SM - R	14 -	1	3022	SC	3022	SC
	50	Supermotard (2T)	02 - 07	1	3069	SC	3015	SC
	50	SU (2T) Urban Base (Cast wheel)	10 -	1	3012	SC	3063	SC
	50	SM 0.5 Black Panther	08 - 10	1	3031	SC	3063	SC

SUZUKI

AH	50	N Address (CA1GA) Italian Market	92 - 95	1	3022	SC	T	
AJ	50	ZZ Sepia	92 -	1	3022	SC	T	
AN	50		95	1	3051	SC	T	
AP	50	R / S / T / V / W	96 - 02	1	3013	SC	T	
AY	50	V/WV/WW/WRW/K1-K4 Katana	97 - 04	1	3013	SC	T	
AY	50	WRK2-WRK4 Katana (Grimeca)	99 - 04	1	3013	SC	3015	SC
AY	50	WRK1-WRK5 Katana (AJP caliper)	01 - 05	1	3015	SC	3015	SC
AZ	50	RY / RK2	00 - 02	1	3051	SC	T	
CC	50	Tune	92 -	1	3022	SC	T	
DR	50	Big	89 -	1	3015	SC	T	
RMX	50		98 -	1	3015	SC	3015	SC
SMX	50	Super Motard	98 -	1	3015	SC	3015	SC
TR	50	Street Magic	98 -	1	3051	SC	T	
TV	50	Wolf	89 -	1	3012	SC	T	
UF	50	Estilete	00 - 02	1	3015	SC	T	
UX	50	W Zillion	99 - 02	1	3013	SC	T	
ZZ	50	Scooter	92 -	1	3022	SC	T	
LIDO	75	Style	84 -	1	3022	SC	T	
AH	80	Address	88 -	1	3022	SC	T	
AH	80	Scooter	92 - 94	1	3022	SC	T	
AJ	80	ZZ Sepia	90 -	1	3022	SC	T	
AH	100	Address	91 - 96	1	3022	SC	T	
UG	110	W/SW/Y/SY/SK1 Hokuto/Address	98 - 02	1	3051	SC	T	
FD	112	Shogun R	04 -	1	3062	SC	T	

SIMSON

	50	Habict CX	01 -	1	3013	SC	T	
	50	Spatz	99 -	1	3013	SC	T	
	50	Sperber	99 -	1	3013	SC	T	
	50	Star	99 -	1	3013	SC	T	

SIAM

	50	Falcon	97 -	1	3013	SC	T	
	50	Mat	97 -	1	3022	SC	T	
	50	Scross	97 -	1	3013	SC	T	
	100	Mat	97 -	1	3022	SC	T	

SIAMOTO

	50	Birdie	02 -	1	3029	SC	T	

SULA

	50	City Bird	99 -	1	3024	SC	T	
	50	Thunder Bird	99 -	1	3022	SC	T	
	100	Thunder Bird	99 -	1	3022	SC	T	

SYM

	50	Bullet	93	1	3009	SC	T	
	50	Cinderella	99 -	1	3009	SC	T	
	50	City Hopper	99 - 02	1	3038	SC	T	
	50	Fiddle II	08 - 14	1	3039	SC	T	
	50	Fiddle III	14 -	1	3039	SC	T	
	50	Jet Alpha	95 -	1	3039	SC	T	
	50	Jet BasiX	06 - 09	1	3039	SC	T	
	50	Jet Euro X S	99 - 05	1	3039	SC	T	
	50	Jet Euro X	06 -	1	3039	SC	T	
	50	Jet Sport X SR	06 -	1	3039	SC	3041	SC
	50	Jet 4 (4T)	10 -	1	3039	SC	T	
	50	Jungle	96 -	1	3039	SC	T	
	50	Mask / Mask LC	00 - 05	1	3039	SC	T	
	50	Mio	05 -	1	3009	SC	T	
	50	Orbit	08 - 09	1	3038	SC	T	
	50	Red Devil	99 - 09	1	3039	SC	T	
	50	Shark	99 - 03	1	3067	SC	T	
	50	Super Fancy	95 - 97	1	3039	SC	T	
	50	Super Fancy	98 -	1	3038	SC	T	
	50	Symphony (4T)	09 -	1	3039	SC	T	
	50	Symply	07 -	1	3039	SC	T	
DD	50		02 -	1	3009	SC	T	
RS	50		04 - 09	1	3067	SC	T	
RS21	50		02 -	1	3067	SC	T	
	100	Cinderella	01 -	1	3009	SC	T	
	100	Jet	99 - 00	1	3039	SC	T	
	100	Jet Euro X	05 -	1	3039	SC	T	
	100	Jet Sport X	06 -	1	3039	SC	T	
	100	Mio	05 -	1	3009	SC	T	
	100	Party	97 -	1	3039	SC	T	
SR	100	Sunrise	97 -	1	3006	SC	T	
	100	Super Fancy	95 -	1	3039	SC	T	
	110	Bullet	93	1	3011	MSC	T	
	110	Star	03 -	1	3039	SC	T	

TGB

	50	Akros Tec	03 - 04	1	3039	SC	T	
	50	Apollo	99 -	1	3078	SC	T	
	50	City (2T) / City (4T)	07 -	1	3022	SC	T	
	50	Delivery (Up to E/F no 609099)	04 - 06	1	3039	SC	T	
	50	Delivery / Express (From E/F no 609100)	06 - 09	1	3022	SC	T	
	50	Fire,Sky	03 -	1	3078	SC	T	
	50	Generic Trigger	02 -	1	3022	SC	T	
	50	High Wheel	02 -	1	3022	SC	T	
	50	X Bullet R	06 -		NA		3022	SC
	50	101 R	04 - 09	1	3039	SC	T	
	50	202 Classic	03 - 09	1	3039	SC	T	
	50	203	05 -	1	3078	SC	T	
	50	303 Revolution	02 - 03	1	3022	SC	T	
	50	303R Hawk / laser	04 -	1	3022	SC	T	
	50	F409 Cruise	02 - 05	1	3022	SC	T	
	90	Apollo	99 -	1	3078	SC	T	

VESPA

ET2	50		97 - 05	1	3043	SC	T	
ET4	50		00 - 04	1	3043	SC	T	
LX	50	(2T / 4T)	13 - 14	1	3043	SC	T	
LXV	50		07 - 09	1	3043	SC	T	
	50	S (2T / 4T)	07 - 13	1	3043	SC	T	
	50	S Sport (2T / 4T)	07 - 13	1	3043	SC	T	
	50	Sprint (2T / 4T)	14 - 15	1	3043	SC	T	
	50	Sprint S (2T)	15 - 15	1	3043	SC	T	
	50	Primavera (2T / 4T)	13 - 14	1	3060	SC	T	
	50	Touring (2T / 4T)	15 - 15	1	3060	SC	T	

YAMAHA

BW'S	50	Spy	95 -	1	3013	SC	T	
BW'S	50	Bump	97 -	1	3013	SC	T	
BW'S	50	Original	96 -	1	3013	SC	T	
BW'S	50	R	94 - 95	1	3013	SC	T	
BW'S	50	Next Generation	99 - 07	1	3013	SC	T	
CR	50	Target	91 -	1	3029	SC	T	
CR	50	Z	91 - 95	1	3029	SC	T	
CS	50	JOG (Spain)	88 -	1	3029	SC	T	
CS	50	JOG-R	02 - 05	1	3013	SC	T	
CS	50	JOG-R	06 - 09	1	3013	SC	T	
CS	50	Z (JOG-RR)	03 - 05	1	3013	SC	T	
CS	50	Z (JOG-RR)	06 - 10	1	3013	SC	T	
CY	50	RS JOG R	96 -	1	3029	SC	T	
DT	50	R	89 - 97	1	3008	SC	T	

1 - 2 = Nombre de jeux avant / Number of front sets / Anzahl Sets / Numero blister / Numero des juegos
NA = Non attribué / Not Available / Nicht verfügbar / Non disponible / No disponible
T = Tambour / Mechanical drum / Strommel / Tamburo / Tambor

YAMAHA

DT	50	R	98 - 03	1	**3004**	SC	**T**	
DT	50	R	04 -	1	**3015**	SC	**3063**	SC
DT	50	X Supermotard	04 -	1	**3031**	SC	**3063**	SC
EW	50	Slider	00 - 05	1	**3027**	SC	**T**	
RZ	50	(5FC1/2)	02 -	1	**3033**	MSC	**T**	
TZM	50	R	94 -	1	**3036**	SC	**3008**	SC
TZR	50		90 - 92	1	**3036**	SC	**3008**	SC
TZR	50		93 - 02	1	**3036**	SC	**3008**	SC
TZR	50		03 - 08	1	**3031**	SC	**3015**	SC
YA	50	R Axis	95 - 96	1	**3013**	SC	**T**	
YA	50	ZA Jog Z	95 -	1	**3029**	SC	**T**	
YE	50	Zest	92 - 95	1	**3013**	SC	**T**	
YH	50	Why	98 - 09	1	**3013**	SC	**T**	
YM	50	Breeze	94 - 95	1	**3013**	SC	**T**	
YN	50	Neo's (2T)	97 - 09	1	**3013**	SC	**T**	
YN	50	Neo's (4T)	09 -	1	**3013**	SC	**T**	
YQ	50	Aerox / Aerox R	97 -	1	**3013**	SC	**3027**	SC
YE	80	Zest	93 -	1	**3013**	SC	**T**	
BW'S	100		96 -	1	**3029**	SC	**T**	
YN	100	Neo's	99 - 03	1	**3013**	SC	**T**	
YQ	100	Aerox	00 - 04	1	**3013**	SC	**T**	
	50	Jet Euro X	06 -	1	**3039**	SC	**T**	

1 - 2 = Nombre de jeux avant / Number of front sets / Anzahl Sets / Numero blister / Numero des juegos
NA = Non attribué / Not Available / Nicht verfügbar / Non disponible / No disponible
T = Tambour / Mechanical drum / Strommel / Tamburo / Tambor

Maxi-scooter

ADLY

RT	125	Super Sonic	01 -	2		3022	MSC	T	
RT	125	Thunderbike	01 -	2		3022	MSC	3022	MSC
	125	Cat	01 -	1		3029	MSC	T	

AEON

	150	Pulsar	06 -	1		3022	MSC	T	
	125	Pulsar	06 -	1		3022	MSC	T	

APRILIA

	125	Atlantic	03 -	1		3056	MSC	3055	MSC
	125	Habana	01 -	1		3064	MSC	T	
	125	Leonardo	99 -	1		3064	MSC	3064	MSC
	125	Leonardo	96	1		3013	MSC	3037	MSC
	125	Leonardo (Grimeca caliper)	99 -	1		3021	MSC	3064	MSC
	125	Mojito / Mojito Custom	02 -	1		3064	MSC	T	
	125	Scarabeo / Scarabeo GT	99 - 03	1		3021	MSC	3055	MSC
	125	Scarabeo / Scarabeo GT	04 -	1		3056	MSC	3055	MSC
	125	Sportcity	05 -	1		3021	MSC	3055	MSC
	125	SR	99 -	1		3064	MSC	T	
	125	Leonardo	97 - 98	1		3013	MSC	3013	MSC
	150	Leonardo	99 -	1		3064	MSC	3064	MSC
	150	Leonardo (Grimeca caliper)	99 -	1		3021	MSC	3064	MSC
	150	Scarabeo	99 - 03	1		3021	MSC	3055	MSC
	150	Scarabeo	04 -	1		3056	MSC	3055	MSC
	150	SR	00 -	1		3064	MSC	T	
	150	Leonardo	97 - 98	1		3013	MSC	3013	MSC
	200	Atlantic	03 -	1		3056	MSC	3055	MSC
	200	Scarabeo / Scarabeo GT	02 - 03	1		3021	MSC	3055	MSC
	200	Scarabeo	07 -	1		3056	MSC	3055	MSC
	200	Scarabeo Class	10 -	1		3056	MSC	3055	MSC
	200	Sportcity	05 -	1		3021	MSC	3055	MSC
	250	Atlantic ie	07 -	1		3056	MSC	3055	MSC
	250	Leonardo	99 - 01	1		3064	MSC	3055	MSC
	250	Leonardo (Grimeca caliper)	99 -	1		3021	MSC	3055	MSC
	250	Leonardo	02 -	1		3056	MSC	3055	MSC
	250	Scarabeo / Scarabeo ie	06 -	1		3056	MSC	3055	MSC
	250	Sportcity ie	07 -	1		3021	MSC	3055	MSC
	300	Leonardo (Grimeca caliper)	05 -	1		3021	MSC	3064	MSC
	300	Scarabeo Special	10 -	1		3056	MSC	3055	MSC
	400	Scarabeo ie	07 -	1		3021	MSC	3055	MSC
	500	Atlantic	02 - 05	1	L	3021	MSC	3055	MSC
	500	Atlantic	02 - 05	1	R	3072	MSC		
	500	Atlantic Sprint	06 -	1		3056	MSC	3055	MSC
	500	Scarabeo	03 - 09	1	L	3021	MSC	3055	MSC
	500	Scarabeo	03 - 09	1	R	3072	MSC		
	500	Scarabeo Class	10 -	1		3021	MSC	3055	MSC
	850	SRV	12 -	2		3028	MSC	3060	MSC

ATALA

	125	Hacker	98 -	1		3013	MSC	T	

BENELLI

	125	Adiva	00 -	1		3013	MSC	3054	MSC
	125	Caffenero	08 -	1	L	3087	MSC	3087	MSC
	125	Caffenero	08 -	1	R	3062	MSC		
	125	Macis	10 -	1		3087	MSC	3087	MSC
	125	Velvet / Velvet Touring	99 -	1		3013	MSC	3013	MSC
	150	Adiva	00 -	1		3013	MSC	3054	MSC
	150	Macis	10 -	1		3087	MSC	3087	MSC
	150	Velvet / Velvet Touing	00 -	1		3013	MSC	3013	MSC
	250	Caffenero	08 -	1	L	3087	MSC	3087	MSC
	250	Caffenero	08 -	1	R	3062	MSC		
	250	Velvet / Velvet Touring	99 -	1		3013	MSC	3013	MSC
	400	Velvet Dusk	03 -	1		3031	MSC	3013	MSC

BETA

	125	Eikon	99 - 03	1		3015	MSC	3015	MSC
	125	Eikon	04 -	1		3013	MSC	3055	MSC
	150	Eikon	99 - 03	1		3015	MSC	3015	MSC
	150	Eikon	04 -	1		3013	MSC	3055	MSC
	250	Eikon	99 -	1		3015	MSC	3015	MSC

BMW

C		Evolution	17 -	2		3003	MSC	3003	MSC
C	600	Sport	12 -	2		3003	MSC	3003	MSC
C	650	GT	12 -	2		3003	MSC	3003	MSC

CAGIVA

	125	Brillo	08 -	1		3047	MSC	T	
	125	Cucciolo	00 -	1		3013	MSC	T	
	125	Nuvola	00 -	1		3013	MSC	T	

CPI

	125	Aragon GP	07 -	1		3047	MSC	NA	
	125	GTR / GTS	02 -	1		3031	MSC	3013	MSC
	125	X-Large	02 -	2		3057	MSC	3057	MSC
	200	GTR / GTS	02 -	1		3031	MSC	3013	MSC
	200	X-Large	02 -	2		3057	MSC	3057	MSC

DAELIM

NS	125	II	00 -	1		3018	MSC	T	
S2	125		05 -	1		3065	MSC	3018	MSC
	125	Delfino	08 -	1		3078	MSC	NA	
	125	DLX / Otello DLX	01 -	1		3018	MSC	3018	MSC
	125	History	01 -	1		3018	MSC	3018	MSC
	125	Message II	00 -	1		3018	MSC	T	
	125	Otello	99 -	1		3018	MSC	T	
	125	Otello	08 -	1		3049	MSC	3018	MSC
	125	S2 FI	07 -	1		3049	MSC	3018	MSC
	125	S3	10 - 11	1		3049	MSC	3062	MSC
	125	S3	12 - 14	1		3049	MSC	NA	
	125	U3 FI	07 -	1		3049	MSC	3018	MSC
S2	250	Free Wind	05 -	1		3065	MSC	3018	MSC

DERBI

	125	Atmosphere	99 -	1		3015	MSC	T	
	125	Boulevard	04 -	1		3015	MSC	T	
	125	GP1	05 -	1		3057	MSC	3015	MSC
	125	Predator	99 -	1		3015	MSC	3015	MSC
	150	Boulevard	04 -	1		3015	MSC	T	
	250	GP1	05 -	1		3057	MSC	NA	

GARELLI

	125	Freeland	02 -	1		3039	MSC	T	
	125	Panther	02 -	1		3038	MSC	3013	MSC
	125	Raider	02 -	1		3022	MSC	T	
	125	T-Rex	00 -	1		3039	MSC	T	
	150	Freeland	02 -	1		3039	MSC	T	
	150	Panther	02 -	1		3038	MSC	3013	MSC
	250	Panther	02 -	1		3038	MSC	3013	MSC
	250	Skynet	02 -	1		3026	MSC	NA	
	400	Skynet	02 -	1		3026	MSC	3013	MSC

GENERIC

	125	Soho	07 -	1		3047	MSC	NA	
	125	Stroke	08 -	1		3047	MSC	NA	
	125	XOR	07 -	1		3047	MSC	NA	
	125	Zion	08 -	1		3047	MSC	NA	

GILERA

DNA	125	(Grimeca caliper)	01 -	1		3031	MSC	3057	MSC
DNA	125	(Hengtong caliper)	01 -	1		3060	MSC	3057	MSC
FX	125	Runner	97 - 99	1		3069	MSC	T	
FX	125	Runner/SP (Grimeca caliper)	00 -	1		3031	MSC	3043	MSC
FX	125	Runner/SP (Hengtong caliper)	00 -	1		3060	MSC	3043	MSC
FX	125	Nexus	07 -	2		3060	MSC	3060	MSC
SC	125		06 -			NA		3015	MSC
ST	125	Runner	08 -	1		3060	MSC	3054	MSC
VX	125	Runner (4T) (Grimeca caliper)	01 -	1		3031	MSC	3054	MSC
VX	125	Runner (4T) (Hengtong caliper)	01 -	1		3060	MSC	3054	MSC
	125	Surfer	01 -	1		3015	MSC	3015	MSC
	125	Typhoon	96 -	1		3045	MSC	T	
FX	150	Runner	97 -	1		3069	MSC	T	
	175	Mad Mud	02 -	1		3031	MSC	3013	MSC
DNA	180	(Grimeca caliper)	01 -	1		3031	MSC	3057	MSC
DNA	180	(Hengtong caliper)	01 -	1		3060	MSC	3057	MSC
FXR	180	Runner	98 - 99	1		3031	MSC	T	
FXR	180	Runner	97	1		3069	MSC	T	
FXR	180	Runner/SP (Grimeca caliper)	00 -	1		3031	MSC	3043	MSC
FXR	180	Runner/SP (Hengtong caliper)	00 -	1		3060	MSC	3043	MSC
VXR	180	Runner	01 -	1		3060	MSC	T	
VXR	180	Runner (4T) (Grimeca caliper)	01 -	1		3031	MSC	3054	MSC
VXR	180	Runner (4T) (Hengtong caliper)	01 -	1		3060	MSC	3054	MSC
FX	200	Runner	97 - 98	1		3069	MSC	T	
FX	200	Runner SP	98 -	1		3031	MSC	3043	MSC

1 - 2 = Nombre de jeux avant / Number of front sets / Anzahl Sets / Numero blister / Numero des juegos
L = Gauche / Left / Links / Sinistra / Izquierda
R = Droite / Right / Rechts / Destra / Derecha
NA = Non attribué / Not Available / Nicht verfügbar / Non disponible / No disponible

T = Tambour / Mechanical drum / Strommel / Tamburo / Tambor

GILERA

VXR	200	Runner (4T) (Hengtong caliper)	01 -	1	3060	MSC	3054	MSC
VXR	200	Runner (4T) (Grimeca caliper)	01 -	1	3031	MSC	3054	MSC
ST	200	Runner	08 -	1	3060	MSC	3054	MSC
	200	Stalker	97 -	1	3013	MSC	3043	MSC
	250	Nexus	07 -	2	3060	MSC	3060	MSC
	500	Nexus	04 -	2	3028	MSC	3057	MSC
RC	500	Fuoco ie	07 - 14	2	3043	MSC	3060	MSC
GP	800		08 -	2	3028	MSC	3060	MSC

HONDA

SCV	110	Lead	08 -	1	3073	MSC	T	
ANF	125	Innova	03 -	1	3080	MSC	T	
CH	125	Spacy	94 -	1	3073	MSC	T	
FES	125	Panthéon	98 - 02	1	3026	MSC	T	
FES	125	Panthéon	03 -	1	3026	MSC	3076	MSC
FES	125	S-wing	07 -	1	3082	MSC	3083	MSC
MSX	125		13 - 14	1	3080	MSC		
NES	125	@	01 -	1	3019	MSC	T	
PCX	125		09 -	1	3102	MSC	T	
R	125	Lead	88 -	1	3009	MSC	T	
SH	125		02 - 08	1	3019	MSC	T	
SH	125	i	09 - 14	1	3082	MSC	3083	MSC
SH	125	Mode	14 -	1	3102	MSC	T	
SH	125	i	14 -	1	3059	MSC	3083	MSC
SES	125	Dylan	02 -	1	3073	MSC	T	
PS	125	i	07 -	1	3073	MSC	T	
FES	150	Panthéon	99 - 02	1	3026	MSC	T	
FES	150	Panthéon	03 -	1	3026	MSC	3076	MSC
FES	150	S-wing	08 -	1	3082	MSC	3083	MSC
NES	150	@	01 -	1	3019	MSC	T	
PS	150	i	07 -	1	3073	MSC	T	
SES	150	Dylan	02 -	1	3073	MSC	T	
SH	150		02 - 08	1	3019	MSC	T	
SH	150	i	09 - 12	1	3082	MSC	3083	MSC
SH	150	i	14 -	1	3059	MSC	3083	MSC
CH	250	Spacy	85 - 86	1	3019	MSC	T	
CH	250	Spacy / Freeway Fusion	88 -	1	3019	MSC	T	
CN	250	Helix	86 - 87	1	3011	MSC	T	
CN	250	Helix (Fusion)	92	1	3017	MSC	T	
CN	250	Helix (Fusion)	93 -	1	3003	MSC	T	
CN	250	Scooter	88 - 92	1	3017	MSC	T	
CN	250	Scooter	93 -	1	3017	MSC	T	
CN	250	Spazio	88 - 89	1	3019	MSC	T	
CN	250	Spazio	90 - 97	1	3017	MSC	T	
FES	250	Foresight	98 - 99	1	3026	MSC	T	
FES	250	Foresight	00 -	1	3026	MSC	3076	MSC
NSS	250	Forza	00 - 04	1	3026	MSC	3079	MSC
NSS	250	Forza	05 -	1	3082	MSC	3083	MSC
NSS	250	Jazz	01 - 04	1	3026	MSC	3079	MSC
NSS	250	Jazz	05 -	1	3082	MSC	3083	MSC
PS	250		05 -	1	3082	MSC	T	
SH	300	i / i (ABS)	07 -	1	3082	MSC	3083	MSC
FJS	400	Silver Wing	06 - 08	1	3026	MSC	3059	MSC
FJS	400	Silver Wing T	09 -	1	3082	MSC	3059	MSC
SWT	400	/ ABS	09 -	1	3082	MSC	3059	MSC
FJS	600	Silver Wing / Silver Wing ABS	01 -	2	3026	MSC	3059	MSC
X-ADV	750	Crossover	17 -	2	COMING SOON		3079	MSC

HYOSUNG

GPS	125	D	00 -	1	3013	MSC	T	
	125	Boomer	03 -	1	3013	MSC	NA	
	125	Exceed	02 -	1	3013	MSC	NA	
	125	Grand Prix	98 -	1	3013	MSC	T	
	125	Hyper	99 -	1	3013	MSC	T	
	150	Exceed	02 -	1	3013	MSC	NA	
	150	Grand Prix	98 -	1	3013	MSC	T	

ITALJET

	100	Millenium	00 - 01	1	3022	MSC	T	
	100	Millenium	02 -	1	3063	MSC	T	
	125	Amarcord	08 -	1	3014	MSC	T	
	125	Dragster	97 -	1	3015	MSC	3015	MSC
	125	Formula	96 -	1	3015	MSC	3015	MSC
	125	Formula LC	99 -	1	3015	MSC	3015	MSC
	125	Jet Set	03 -	1	3063	MSC	T	
	125	Jupiter	02 -	1	3025	MSC	3033	MSC
	125	Millenium	00 - 01	1	3022	MSC	T	
	125	Millenium	02 -	1	3063	MSC	T	
	125	Torpedo (4T) Pro	99 - 09	1	3015	MSC	T	
	125	Torpedo	07 -	1	3073	MSC	T	

ITALJET

	125	Twin	99 -	1	3015	MSC	3015	MSC
	150	Jet Set	03 -	1	3063	MSC	T	
	150	Jupiter	02 -	1	3025	MSC	3033	MSC
	150	Millenium	00 - 01	1	3022	MSC	T	
	150	Millenium	02 -	1	3063	MSC	T	
	150	Torpedo (4T) Pro	00 -	1	3015	MSC	T	
	150	Torpedo	07 -	1	3073	MSC	T	
	180	Dragster	99 -	1	3015	MSC	3015	MSC
	250	Jupiter	02 -	1	3025	MSC	3081	MSC

JONWAY

YY	125		08 - 09	1	3062	MSC	3062	MSC
YY	150		08 - 09	1	3062	MSC	3062	MSC
YY	150	T-19	08 - 09	1	3096	MSC	3096	MSC
YY	250	/ A	08 - 09	1	3062	MSC	3062	MSC
YY	250	T-19	08 - 09	1	3096	MSC	3096	MSC

KAWASAKI

J	125		16 -	1	3003	MSC	NA	MSC
SC	250	Epsilon	02	1	3049	MSC	3074	MSC
J	300		14 -	1	3003	MSC	NA	MSC

KEEWAY

	125	Arn	06 -	1	3013	MSC	T	
	125	Focus	06 -	1	3047	MSC	T	
	125	Matrix	06	1	3022	MSC	T	
	125	Matrix	07 - 10	1	3047	MSC	T	
	125	Matrix Racing Sport	10 -	1	3047	MSC	T	
	125	Outlook	07 - 10	1	3078	MSC	3078	MSC
	150	Arn	06 -	1	3013	MSC	T	
	150	Focus	06 -	1	3047	MSC	T	
	150	Matrix	06 -	1	3047	MSC	T	
	150	Matrix Racing Sport	10 -	1	3047	MSC	T	

KYMCO

	125	Agility	06 -	1	3078	MSC	T	
	125	Agility	14 -	1	3068	MSC	3086	MSC
	125	B&W	99 -	1	3062	MSC	3062	MSC
	125	Calypso	99 -	1	3047	MSC	T	
	125	Dink	96 -	1	3062	MSC	3062	MSC
	125	Dink Street	09 -	1	3003	MSC	3094	MSC
	125	Downtown i	10 -	1	3003	MSC	3094	MSC
	125	Freeway	93 - 95	1	3037	MSC	T	
	125	Grand Dink	02 -	1	3062	MSC	3062	MSC
	125	Heroism	95 -	1	3047	MSC	T	
	125	Jetix	08 -	1	3096	MSC	T	
	125	K-Xct i	13 -	1	3056	MSC	3092	MSC
	125	Like	09	1	3068	MSC	3062	MSC
	125	Like	10 - 14	1	3078	MSC	3062	MSC
	125	Movie	99 -	1	3062	MSC	T	
	125	Movie XL	01 -	1	3062	MSC	T	
	125	New Dink	08 -	1	3062	MSC	3062	MSC
	125	Nexxon	07 -	1	3096	MSC	3096	MSC
	125	People	01 -	1	3068	MSC	T	
	125	Spacer	99 -	1	3062	MSC	3062	MSC
	125	Spike	02 -	1	3096	MSC	T	
	125	Super 8	08 -	1	3068	MSC	T	
	125	Super 9	00 -	1	3014	MSC	3068	MSC
	125	Techno GT	06 -	1	3062	MSC	T	
	125	Vivio	01 -	1	3078	MSC	T	
	125	X.Town i	16 -	1	3056	MSC	3094	MSC
	125	Yager	01 -	1	3062	MSC	3062	MSC
	125	Yager GT	09 -	1	3062	MSC	T	
S	125	People	05 -	1	3068	MSC	3092	MSC
	150	B&W	01 -	1	3062	MSC	3062	MSC
	150	Dink	99 -	1	3062	MSC	3062	MSC
	150	Freeway	95 -	1	3006	MSC	T	
	150	Grand Dink	02 -	1	3062	MSC	3062	MSC
	150	Heroism	95 -	1	3047	MSC	3041	MSC
	150	Movie XL	01 -	1	3062	MSC	T	
	150	People	01 -	1	3068	MSC	T	
	150	Spacer	99 -	1	3062	MSC	3062	MSC
	150	Straight	08 -	1	3096	MSC	3096	MSC
	150	Vivio	01 -	1	3078	MSC	T	
	150	Yager	01 -	1	3062	MSC	3062	MSC
	200	Dink	04 -	1	3062	MSC	3062	MSC
	200	Downtown i	10 -	1	3003	MSC	3094	MSC
	200	i New Dink	08 -	1	3062	MSC	3062	MSC
	200	Like i	09	1	3068	MSC	3062	MSC

1 - 2 = Nombre de jeux avant / Number of front sets / Anzahl Sets / Numero blister / Numero des juegos
L = Gauche / Left / Links / Sinistra / Izquierda
R = Droite / Right / Rechts / Destra / Derecha
NA = Non attribué / Not Available / Nicht verfügbar / Non disponible / No disponible

T = Tambour / Mechanical drum / Strommel / Tamburo / Tambor

KYMCO

	200	Like i	10		1		3078	MSC	3062	MSC
	200	Yager	04 -		1		3062	MSC	3062	MSC
S	200	People	05 -		1		3068	MSC	3092	MSC
	250	B&W	01 -		1		3062	MSC	3062	MSC
	250	Grand Dink	01 -		1		3070	MSC	3071	MSC
	250	People	03 -		1		3062	MSC	T	
S	250	People	06 -		1	R	3062	MSC	3092	MSC
S	250	People	06 -		1	L	3078	MSC		
	250	Super 9	00 -		1		3014	MSC	3068	MSC
	250	Xciting	04 -	05	1		3003	MSC	3003	MSC
	250	Xciting	06 -		1		3003	MSC	3092	MSC
	250	Yup	03 -		1		3062	MSC	3062	MSC
	300	Downtown i ABS	10 -		1		3003	MSC	3094	MSC
	300	Gdink	12 -		1		3003	MSC	3092	MSC
	300	People Gti	10 -		1		3003	MSC	3092	MSC
	300	People Si	08 -		1	R	3078	MSC	3092	MSC
	300	People Si	08 -		1	L	3062	MSC		
	300	K-Xct i	12 -		1		3056	MSC	3092	MSC
	300	Xciting Ri	08 -		2		3003	MSC	3092	MSC
	300	X.Town i	16 -		1		3056	MSC	3094	MSC
	400	Xciting / i	12 -	16	2		NA	MSC	3003	MSC
	400	Xciting i ABS	16		2		NA	MSC	3003	MSC
	400	Maxsym	11 -	16	2		NA	MSC	3003	MSC
	500	Xciting R ABS	09 -		2		3003	MSC	3003	MSC
	500	Xciting	04 -		2		3003	MSC	3003	MSC
	500	Xciting R ABS	09 -		2		3003	MSC	3003	MSC
	700	MyRoad	09 -		2		3003	MSC	3003	MSC

LAVERDA

	125	Phoenix	01 -		1		3067	MSC	3068	MSC
	150	Phoenix	01 -		1		3067	MSC	3068	MSC
	200	Phoenix	01 -		1		3067	MSC	3068	MSC

MALAGUTI

		Ciak (Electric)	00 -	05	1		3013	MSC	T	
	125	Blog	10 -		1		3078	MSC	3022	MSC
	125	Centro ie	08 -		1		3078	MSC	3008	MSC
	125	F-18	00 -		1		3013	MSC	3055	MSC
	125	Ciak / Ciak Master	01 -	08	1		3013	MSC	T	
	125	Madison	99 -		1		3031	MSC	3055	MSC
	125	Phantom Max	04 -		1		3031	MSC	3055	MSC
	125	Runner	87 -		1		3020	MSC	T	
	150	F-18	00 -		1		3013	MSC	3013	MSC
	150	Ciak / Ciak Master	01 -	08	1		3013	MSC	T	
	150	Madison	99 -		1		3031	MSC	3055	MSC
	160	Blog	10 -		1		3078	MSC	3022	MSC
	160	Centro ie	08 -		1		3078	MSC	3008	MSC
	180	Madison	02 -		1		3031	MSC	3055	MSC
	200	Madison	03 -		1		3031	MSC	3055	MSC
	200	Phantom Max	04 -		1		3031	MSC	3055	MSC
	250	Madison S	99 -	03	1		3056	MSC	3055	MSC
	250	Madison RS	04 -	07	1		3031	MSC	3055	MSC
	250	Madison ie	06 -		1		3031	MSC	3055	MSC
	250	Password	05 -		1		3031	MSC	3055	MSC
	250	Phantom Max	04 -	08	1		3031	MSC	3055	MSC
	400	Madison K	02 -	06	1		3056	MSC	3055	MSC
	500	Spidermax GT	04 -		2		3020	MSC	3055	MSC
	500	Spidermax RS	09 -		2		3020	MSC	3055	MSC

MBK

	125	Cityliner	08 -		1		3059	MSC	3033	MSC
	125	Doodo	00 -	05	1		3013	MSC	T	
	125	Flame R / F	96 -	03	1		3008	MSC	T	
	125	Flame X	04 -	10	1		3069	MSC	T	
	125	Ocito	15 -		1		3069	MSC	NA	
	125	Skycruiser	06 -	09	1		3085	MSC	3057	MSC
	125	Skycruiser	10 -		1		3097	MSC	3057	MSC
	125	Skycruiser ABS	11 -		1		3097	MSC	3095	MSC
	125	Skyliner	98 -	00	1		3028	MSC	T	
	125	Skyliner	01 -	10	1		3028	MSC	3057	MSC
	125	Thunder	01 -	03	1		3028	MSC	3057	MSC
	125	Tryptik	14 -		1	L	3106	MSC	3108	MSC
	125	Tryptik	14 -		1	R	3107	MSC		
	125	Waap	08 -		1		3099	MSC	T	
	125	X-Over	10 -		1		3098	MSC	T	
	150	Doodo	00 -	05	1		3013	MSC	T	
	150	Skyliner	01 -		1		3028	MSC	3057	MSC
	150	Thunder	01 -	03	1		3028	MSC	3057	MSC
	150	Vertex	97 -		1		3028	MSC	T	

MBK

	180	Skyliner	04 -		1		3028	MSC	3057	MSC
	250	Skyliner	96 -	98	1		3025	MSC	T	
	250	Skyliner	99 -	02	1		3025	MSC	3033	MSC
	300	Kilibre	03 -	04	1		3028	MSC	3028	MSC
	400	Skyliner	04 -		1		3025	MSC	3075	MSC

MZ / MUZ

	125	Mantizz S	05 -	07	1		3073	MSC	T	
	125	Moskito	02		1		3022	MSC	T	

PEUGEOT

		E-Vivacity (Electric)	10		1		3047	MSC	T	
		E-Vivacity (Electric)	11 -	14	1		3039	MSC	T	
	125	Citystar	11 -		1		3060	MSC	3055	MSC
	125	Elyseo (AJP caliper)	98 -	01	1		3015	MSC	T	
	125	Elyséo	03 -		1		3031	MSC	3063	MSC
	125	Elystar	03 -		1		3031	MSC	3063	MSC
	125	Django Allure (4T)	14 -		1		3102	MSC	3024	MSC
	125	Django Evasion (4T)	14 -		1		3102	MSC	3024	MSC
	125	Django Heritage (4T)	14 -		1		3039	MSC	3057	MSC
	125	Django Sport (4T)	14 -		1		3102	MSC	3024	MSC
SV	125	Geo	91 -	92	1		3006	MSC	T	
SV	125	Geo / L Executive	93 -		1		3006	MSC	T	
	125	Geopolis	06 -		1		3031	MSC	3063	MSC
	125	Geopolis RS	08 -	10	1		3078	MSC	3078	MSC
	125	Jet Force / Compressor	03 -		1		3031	MSC	3063	MSC
	125	Looxor	03 -	08	1		3056	MSC	3015	MSC
	125	LXR	10 -	12	1		3039	MSC	3092	MSC
	125	Satelis	06 -	09	1		3031	MSC	3063	MSC
	125	Satelis Compressor	06 -	11	1		3031	MSC	3063	MSC
	125	Satelis RS	07 -	13	1		3031	MSC	3063	MSC
	125	Satelis (Nissin caliper)	08 -	09	1		3078	MSC	3078	MSC
	125	Satelis II (Nissin caliper)	13 -		1		3102	MSC	3043	MSC
	125	Speedfight (4T)	14 -		1		3096	MSC	3057	MSC
	125	Sum-Up	08 -		1		3018	MSC	T	
	125	Tweet	10 -		1		3039	MSC	3013	MSC
	125	Tweet RS	10 -		1		3039	MSC	3013	MSC
	125	Vivacity (4T)	10 -		1		3078	MSC	T	
	150	Elyséo	01 -		1		3031	MSC	3063	MSC
	150	Elystar	03 -		1		3031	MSC	3063	MSC
	150	Django Allure (4T)	14 -		1		3102	MSC	3022	MSC
	150	Django Evasion (4T)	14 -		1		3102	MSC	3022	MSC
	150	Django Heritage (4T)	14 -		1		3039	MSC	3057	MSC
	150	Django Sport (4T)	14 -		1		3102	MSC	3022	MSC
	150	Looxor	03 -		1		3056	MSC	3015	MSC
	150	Tweet	10 -		1		3039	MSC	3013	MSC
	200	LXR	10 -	12	1		3039	MSC	3092	MSC
SV	250		01 -	02	1		3026	MSC	3076	MSC
	250	Geopolis (AJP caliper) / ABS	06 -	09	1		3031	MSC	3063	MSC
	250	Geopolis (Nissin caliper) / ABS	06 -	09	1		3078	MSC	3078	MSC
	250	Satelis (AJP caliper)	07 -	10	1		3031	MSC	3063	MSC
	250	Satelis (Nissin caliper)	06 -	10	1		3078	MSC	3060	MSC
	300	Geopolis	10 -		1		3078	MSC	3078	MSC
	300	Geopolis 300 GT	14 -		2		3003	MSC	3078	MSC
	300	Geostyle	10 -		1		3078	MSC	3078	MSC
	300	Satelis (4T)	13		1		3078	MSC	3078	MSC
	400	Geopolis (AJP caliper)	07 -	10	1		3031	MSC	3063	MSC
	400	Geopolis (Nissin caliper) / ABS	07 -	10	1		3078	MSC	3078	MSC
	400	Geopolis RS	08 -	10	1		3065	MSC	3078	MSC
	400	Metropolis 12"	13 -		2		3100	MSC	3105	MSC
	400	Metropolis 13"	17 -		2		NA	MSC	3087	MSC
	400	Satelis	07 -	10	2		3065	MSC	3078	MSC
	400	Satelis (4T)	14		2		3065	MSC	3078	MSC
	500	Satelis	07 -	10	2		3065	MSC	3078	MSC
	600	Satelis ABS	04 -		1		3065	MSC	3063	MSC

PGO

		i-Dep (Electric)	09 -		1		3039	MSC	T	
	125	Charge A / B	02 -		1		3039	MSC	T	
	125	I-Charge Fuel injection	03 -		1		3078	MSC	T	
	125	Kung Fu					T		3029	MSC
	125	Libra	10 -		1		3087	MSC	T	
	125	Ligero	06 -		1		3039	MSC	T	
	125	My Bubu / Young Bubu	02 -		1		3039	MSC	T	
	125	T Rex	99 -		1		3039	MSC	T	
	125	Tornado	96 -		1		3029	MSC	T	
	125	X Hot	10 -		1		3087	MSC	T	
	150	TR3	02 -		1		3039	MSC	T	
	150	T-Rex	01 -		1		3039	MSC	T	

1 - 2 = Nombre de jeux avant / Number of front sets / Anzahl Sets / Numero blister / Numero des juegos
L = Gauche / Left / Links / Sinistra / Izquierda
R = Droite / Right / Rechts / Destra / Derecha
NA = Non attribué / Not Available / Nicht verfügbar / Non disponible / No disponible

T = Tambour / Mechanical drum / Strommel / Tamburo / Tambor

PIAGGIO

	125	Beverly (Hengtong caliper)	02 - 06	1		3060	MSC	3060	MSC
	125	Beverly (Grimeca caliper)	02 - 06	1		3031	MSC	3031	MSC
	125	Beverly / S	07 -	1		3060	MSC	3060	MSC
	125	Beverly Tourer	08 - 09	1		3060	MSC	3060	MSC
	125	Carnaby	07 - 09	1		3060	MSC	3060	MSC
	125	Fly	05 - 09	1		3060	MSC	T	
GT	125	L	04 -	1		3060	MSC	3054	MSC
GTS	125		07 -	1		3060	MSC	3054	MSC
GTV	125		08 -	1		3060	MSC	3084	MSC
GTX	125	Super Hexagon (Grimeca) 11"	00 -	1		3031	MSC	3054	MSC
GTX	125	Super Hexagon (Hengtong) 11"	00 -	1		3060	MSC	3054	MSC
GTX	125	Super Hexagon (Hengtong) 12"	00 -	1		3060	MSC	3054	MSC
LE	125	Liberty / S	98 - 10	1		3043	MSC	T	
LE	125	Liberty / S	11 -	1		3043	MSC	T	
	125	Hexagon	94 - 95	1		3013	MSC	T	
	125	Hexagon	96 - 97	1		3045	MSC	T	
LX	125	Hexagon	98 - 99	1		3031	MSC	T	
LX4	125	Hexagon	98 - 99	1		3031	MSC	T	
LX	125	(4T)	05 -	1		3043	MSC	T	
LXV	125		08 -	1		3013	MSC	T	
	125	Medley / S	17 -	1		NA	MSC	3077	MSC
	125	MP3	06 - 08	2		3043	MSC	3084	MSC
	125	MP3 ie	08 - 10	2		3043	MSC	3084	MSC
	125	MP3 Hybrid	09 - 10	2		3043	MSC	3084	MSC
PX	125		99 - 01	1		3053	MSC	T	
PX	125		02 -	1		3043	MSC	T	
	125	Sfera	95 -	1		3043	MSC	T	
	125	Skipper	93 - 95	1		3053	MSC	T	
	125	Skipper	96 - 98	1		3045	MSC	T	
LX	125	Skipper / ST	99 -	1		3031	MSC	T	
	125	Typhoon	96 -	1		3045	MSC	T	
	125	Typhoon Catalysed	02 -	1		3013	MSC	3013	MSC
ET4	125	Vespa	96 -	1		3043	MSC	T	
	125	X7	08 -	1		3060	MSC	3077	MSC
	125	X8	04	2		3060	MSC	3057	MSC
	125	X8	05 -	2		3060	MSC	3084	MSC
	125	X9	01 - 03	2		3057	MSC	3057	MSC
	125	X9	04 - 05	1	L	3060	MSC	3057	MSC
	125	X9	04 - 05	1	R	3077	MSC		
	125	X9 Evo (Brembo caliper)	03 - 04	2		3057	MSC	3057	MSC
	125	X9 Evo (Hengtong caliper)	05 - 07	1	L	3060	MSC	3084	MSC
	125	X9 Evo (Hengtong caliper)	05 - 07	1	R	3077	MSC		
	125	X10	12 -	1	L	3060	MSC	3077	MSC
	125	X10	12 -	1	R	3077	MSC		
	125	Xevo	08 -	1		3060	MSC	3077	MSC
	125	Zip II (4T)	00 -	1		3043	MSC	T	
S	125	(4T)	07 -	1		3043	MSC	T	
SKR	125		94 -	1		3013	MSC	T	
TPH	125		96 -	1		3045	MSC	T	
	150	Fly	05 - 09	1		3060	MSC	T	
	150	Hexagon	94 - 95	1		3013	MSC	T	
	150	Hexagon	96 - 97	1		3045	MSC	T	
	150	Liberty	99 - 09	1		3043	MSC	T	
	150	Skipper	94 -	1		3053	MSC	T	
	150	X8 Street	06 -	1		3060	MSC	T	
ET4	150		02 -	1		3043	MSC	T	
LX	150		08 -	1		3013	MSC	T	
PX	150		02 -	1		3043	MSC	T	
GTX	180	Super Hexagon (Grimeca) 11"	00 -	1		3031	MSC	3054	MSC
GTX	180	Super Hexagon (Hengtong) 11"	00 -	1		3060	MSC	3054	MSC
GTX	180	Super Hexagon (Hengtong) 12"	01 -	1		3060	MSC	3054	MSC
LX	180		98 - 99	1		3031	MSC	T	
LXT	180	Hexagon	99 -	1		3031	MSC	T	
	180	X9	02 -	2		3057	MSC	3057	MSC
	200	Beverly (Hengtong caliper)	02 - 06	1		3060	MSC	3060	MSC
	200	Beverly (Grimeca caliper)	02 - 06	1		3031	MSC	3031	MSC
	200	Carnaby	08 -	1		3060	MSC	3060	MSC
	200	Liberty	06 -	1		3043	MSC	T	
BV	200		02 - 04	1		3060	MSC	3060	MSC
BV	200		05 -	1		3060	MSC	3031	MSC
GT	200	L	04 -	2		3060	MSC	3054	MSC
PX	200		02 -	1		3043	MSC	T	
LXT	200		98 -	1		3031	MSC	T	
	200	X8	04	2		3060	MSC	3057	MSC
	200	X8	05 -	2		3060	MSC	3084	MSC
	200	X9	03 -	2		3057	MSC	3057	MSC
	250	Beverly	07 -	1		3060	MSC	3060	MSC
BV	250		06 -	1		3060	MSC	3060	MSC
	250	GT 60	06 -	1		3060	MSC	T	
	250	LX 60	06 -	1		3043	MSC	T	
	250	MP3 ie / LT	06 - 09	2		3043	MSC	3077	MSC
LX4	250	Hexagon	98 - 99	1		3031	MSC	T	
	250	X7	08 -	1		3060	MSC	3077	MSC

PIAGGIO

	250	X8	05 -	2		3060	MSC	3084	MSC
	250	X9	00 - 04	2		3057	MSC	3057	MSC
	250	X9	05 -	1	L	3060	MSC	3084	MSC
	250	X9	05 -	1	R	3077	MSC		
	250	Xevo	08 -	1		3060	MSC	3077	MSC
GT	250	Hexagon	99 -	1		3031	MSC	T	
GTS	250	ABS	06 -	1		3060	MSC	3054	MSC
GTV	250		08 -	1		3060	MSC	3084	MSC
GTX	250	Super Hexagon	01 -	1		3031	MSC	3054	MSC
	300	Beverly	07 -	1		3060	MSC	3077	MSC
	300	Carnaby Cruiser	10 -	1		3060	MSC	3060	MSC
	300	MP3 LT ie	10	2		3043	MSC	3077	MSC
	300	MP3 LT Sport ie	13	2		3043	MSC	3077	MSC
	300	MP3 Yourban	11 - 13	2		3043	MSC	3077	MSC
GTS	300	Super	09 -	1		3060	MSC	3054	MSC
X7	300	ie	10 -	1		3060	MSC	3077	MSC
	350	Beverly	14 -	1		3060	MSC	3077	MSC
	350	MP3	14 -	2		3109	MSC	3077	MSC
	350	X10	12 -	1	L	3060	MSC	3077	MSC
	350	X10	12 -	1	R	3077	MSC		
	400	Beverly ie	07 -	1		3028	MSC	3060	MSC
	400	Beverly Tourer	08 - 09	1		3057	MSC	3057	MSC
	400	MP3 ie	07 -	2		3043	MSC	3060	MSC
	400	MP3 LT	09 -	2		3043	MSC	3060	MSC
	400	X8	07 -	1	L	3060	MSC	3060	MSC
	400	X8	07 -	1	R	3077	MSC		
	400	Xevo	08 -	1	L	3060	MSC	3060	MSC
	400	Xevo	08 -	1	R	3077	MSC		
	500	Beverly	02 - 05	2		3057	MSC	3057	MSC
	500	Beverly	06	2		3057	MSC	3084	MSC
	500	Beverly Cruiser	07 - 09	2		3057	MSC	3057	MSC
	500	MP3 ie	09 - 10	2		3043	MSC	3060	MSC
	500	MP3 ie	11 - 12	2		3043	MSC	3060	MSC
	500	MP3 LT ie	11 - 13	2		3043	MSC	3060	MSC
	500	MP3	14 -	2		3109	MSC	3060	MSC
	500	MP3 Sport ie	11 - 12	2		3043	MSC	3060	MSC
	500	MP3 Sport LT ie	11 - 13	2		3043	MSC	3060	MSC
	500	MP3	14 -	2		3109	MSC	3060	MSC
	500	X9	00 - 02	2		3057	MSC	3057	MSC
	500	X9 Evo	03 - 06	2		3028	MSC	3057	MSC
	500	X9 Evo ABS	04 -	2		3028	MSC	3057	MSC
	500	X10	12 -	1	L	3060	MSC	3077	MSC
	500	X10	12 -	1	R	3077	MSC		
BV	500		06 -	2		3057	MSC	3057	MSC

QUADRO

3D	350	S	11 -	2		3013	MSC	3022	MSC
3D	350	S (Parking brake)	11 -	1		3022	MSC		
4	350		15 -	2		3027	MSC	3022	MSC

RIEJU

	125	Cityline ie	13 - 14	1		3060	MSC	3057	MSC
	125	Pacific (4T)	08	1		3047	MSC	T	
	125	Pacific Scooter	09	1		3047	MSC	T	
	300	Cityline ie	14 - 15	1		3060	MSC	3057	MSC

SACHS

	125	Bee	08 - 09	1		3008	MSC	T	
	125	Madass (4T)	06 - 09			NA		3018	MSC
	125	Speedjet RS	10	1		3047	MSC	3043	MSC
	400	Quattrocento	08	2		3003	MSC	3043	MSC

SHE-LUNG

	125	Mars	97 -	1		3029	MSC	T	

SIAMOTO

	125	BD / KD	02 -	1		3069	MSC	T	

SIMSON

	125	Schikra	99 -	1		3021	MSC	3013	MSC
	125	Star	99 -	1		3015	MSC	T	

SULA

	125	Thunder Bird	99 -	1		3022	MSC	T	
AN	125	R / Vecstar	94 -	1		3051	MSC	T	

1 - 2 = Nombre de jeux avant / Number of front sets / Anzahl Sets / Numero blister / Numero des juegos
L = Gauche / Left / Links / Sinistra / Izquierda
R = Droite / Right / Rechts / Destra / Derecha
NA = Non attribué / Not Available / Nicht verfügbar / Non disponible / No disponible

T = Tambour / Mechanical drum / Strommel / Tamburo / Tambor

SUZUKI

AN	125	S / T / V / W / X	95 - 00	1		3051	MSC	T	
AN	125	HKK5	06 - 08	1		3022	MSC	T	
CS	125	LIDO	90 -	1		3022	MSC	T	
FL	125	SD / Address / Underbone	07 - 10	1		3062	MSC	T	
FX	125			1		3062	MSC	T	
UC	125	Epicuro	99 - 02	1		3051	MSC	T	
UE	125	CTK1	01 - 03	1		3022	MSC	T	
UH	125	Burgman	02 - 06	1		3028	MSC	3057	MSC
UH	125	Burgman	07 - 13	1		3082	MSC	3090	MSC
UH	125	Burgman	14 -	1		3086	MSC	3090	MSC
UX	125	SIXteen	08 -	1		3082	MSC	3090	MSC
UZ	125	(CF46A) V125G	05 -	1		3051	MSC	T	
AN	150		98 -	1		3051	MSC	T	
UC	150	Epicuro	99 -	1		3051	MSC	T	
UE	150	CTK1	02 -	1		3022	MSC	T	
UH	150	Burgman	04 - 06	1		3028	MSC	3057	MSC
UX	150	SIXteen	08 -	1		3082	MSC	3090	MSC
UH	200	Burgman	07 -	1		3082	MSC	3090	MSC
UH	200	Burgman	14 -	1		3086	MSC	3090	MSC
AN	250	Vecstar	94 -	1		3051	MSC	T	
AN	250	Burgman / Skywave	98 - 03	1		3049	MSC	3073	MSC
AN	250	Burgman / Skywave	04 - 06	1		3049	MSC	3074	MSC
AN	250	Burgman / Skywave Type M / S / SS	07 - 08	1	L	3087	MSC	3066	MSC
AN	250	Burgman / Skywave Type M / S / SS	07 - 08	1	R	3086	MSC		
AN	400	Burgman / Skywave	99 - 00	1		3049	MSC	3073	MSC
AN	400	Burgman / Skywave	01 - 06	1		3049	MSC	3074	MSC
AN	400	Burgman / Skywave	07 -	1	L	3087	MSC	3066	MSC
AN	400	Burgman / Skywave	07 -	1	R	3086	MSC		
AN	650	Burgman / Skywave	03 -	2		3065	MSC	3066	MSC

SYM

GTS	125	Evo i	10 - 14	2		3070	MSC	3092	MSC
GTS	125	Joymax / Voyager	06 - 09	1		3092	MSC	3092	MSC
RS	125		04 - 06	1		3067	MSC	3062	MSC
RS21	125	/ R	02 -	1		3067	MSC	T	
	125	Aero Wolf	05	1		3011	MSC	T	
	125	Attila	95 -	1		3039	MSC	T	
	125	Citycom	08 -	1		3039	MSC	3092	MSC
	125	Euro MX (Euro 1)	02 - 07	1		3067	MSC	T	
	125	Euro MX (Euro 2)	06 - 09	1		3067	MSC	3062	MSC
	125	Fiddle II	08 - 17	1		3039	MSC	T	
	125	Jet 4 (4T)	10 -	1		3039	MSC	T	
	125	Jet 14	17 -	1		3039	MSC	3043	MSC
	125	Orbit	08 - 09	1		3038	MSC	T	
HD	125		04 - 07	1		3068	MSC	T	
HD	125	S Evo	07	1		3039	MSC	T	
HD	125	Evo i	07 - 10	1		3039	MSC	3092	MSC
	125	Joyride	01 - 06	1		3067	MSC	3068	MSC
	125	Joyride i	07 - 09	1		3067	MSC	3092	MSC
	125	Joyride Evo i	09 - 10	1		3067	MSC	3092	MSC
	125	Megalo	00 - 07	1		3039	MSC	T	
	125	New Duke	02 -	1		3039	MSC	T	
	125	Shark	99 - 02	1		3067	MSC	T	
	125	Shark R	00 - 02	1		3067	MSC	3062	MSC
	125	SK	03 - 04	1		3067	MSC	3068	MSC
	125	Super Duke	99 - 02	1		3039	MSC	T	
	125	Symphony (4T)	09 -	1		3039	MSC	T	
	125	Symply	07 - 09	1		3039	MSC	T	
VS	125		06 - 09	1		3067	MSC	T	
VS	150		06 - 08	1		3067	MSC	T	
HO1	150		95 -	1		3039	MSC	T	
RS	150		05 -	1		3067	MSC	3062	MSC
	150	Attila	00 -	1		3039	MSC	T	
	150	Euro MX	03 -	1		3067	MSC	T	
	150	Joyride	01 - 06	1		3067	MSC	3068	MSC
	150	Shark	99 - 02	1		3067	MSC	T	
	150	Shark R	00 - 02	1		3067	MSC	3062	MSC
	150	Super Duke	99 - 02	1		3039	MSC	T	
	200	Fiddle III 200i (4T)	14 -	1		3039	MSC	T	
	200	HD	04 - 07	1		3068	MSC	T	
	200	HD Evo	07	1		3039	MSC	3092	MSC
	200	HD Evo i	07 - 09	1		3039	MSC	3092	MSC
	200	Joyride	03 - 07	1		3067	MSC	3068	MSC
	200	Joyride i	07 - 09	1		3067	MSC	3092	MSC
	200	Joyride Evo i	09 - 10	1		3067	MSC	3092	MSC
GTS	250	Joymax	06	2		3070	MSC	3092	MSC
GTS	250	Joymax i	07 - 09	1		3070	MSC	3092	MSC
GTS	250	Voyager	05	2		3070	MSC	3061	MSC
	300	Cruisym i	17 -	1		3110	MSC	3043	MSC

SYM

GTS	300		08 - 09	2		3070	MSC	3092	MSC
GTS	300	Citycom i	08 - 14	2		3039	MSC	3039	MSC
GTS	300	Joymax Evo i	09 -	2		3070	MSC	3092	MSC
	400	Max Sym	11 - 15	2		3110	MSC	3111	MSC
GT	500		04 -	2		3049	MSC	3068	MSC
	600	Max Sym (ABS)	14 - 15	2		3110	MSC	3111	MSC

TGB

	125	X-Motion	08 -			NA		3092	MSC
	125	X-Bullet R	08 -			NA		3022	MSC
	125	204 Classic	03 - 04	1		3022	MSC	T	
	125	303 Revolution	02 - 03	1		3022	MSC	T	
	125	F409	02 - 05	1		3022	MSC	T	
	250	Dynasty	06 -	1		3078	MSC	3029	MSC
	250	X-Motion i	08 -			NA		3092	MSC
	300	X-Motion Efi	10 - 12			NA		3092	MSC

VESPA

	125	946 Special (4T 4V)	13 - 13	1		3060	MSC	3054	MSC
	125	ET4	96 - 99	1		3060	MSC	T	
PX	125		98 - 06	1		3053	MSC	T	
	125	ET4	99 - 05	1		3060	MSC	T	
	125	S (4T)	07 - 13	1		3043	MSC	T	
	125	S Sport	11 - 13	1		3043	MSC	T	
GT	125	Granturismo (Heng Tong caliper)	03 - 06	1		3060	MSC	3054	MSC
GT	125	Granturismo (Grimeca caliper)	03 - 06	1		3031	MSC	3054	MSC
GTS	125		07 - 11	1		3060	MSC	3054	MSC
GTS	125	Super	10 - 13	1		3060	MSC	3054	MSC
GTS	125	Supersport	13 - 13	1		3060	MSC	3054	MSC
LX60	125	(Special anniversary model)	06 - 06	1		3053	MSC	T	
GTV	125		07 - 09	1		3060	MSC	3054	MSC
LX	125	(4T)	05 - 13	1		3043	MSC	T	
LX	125	(Serie Speciali 4T)	12 - 12	1		3043	MSC	T	
LXV	125		07 - 12	1		3060	MSC	T	
	125	Primavera (4T 4V)	13 - 14	1		3060	MSC	T	
	125	Sprint	15 - 15	1		3060	MSC	T	
	125	Sprint S (4T 3V ABS)	15 - 15	1		3060	MSC	T	
	150	Primavera (4T 4V)	13 - 14	1		3060	MSC	T	
	150	Sprint S (4T 3V ABS)	15 - 15	1		3060	MSC	T	
ET4	150		99 - 05	1		3043	MSC	T	
LX	150	(4T)	05 - 13	1		3043	MSC	T	
LX	150	(Serie Speciali 4T)	12 - 12	1		3043	MSC	T	
	150	S (4T)	07 - 12	1		3043	MSC	T	
	150	S Sport (4T)	11 - 12	1		3043	MSC	T	
PX	150		98 - 06	1		3053	MSC	T	
GT	200	L Granturismo (Heng Tong caliper)	03 - 06	1		3060	MSC	3054	MSC
GT	200	L Granturismo (Grimeca caliper)	03 - 06	1		3031	MSC	3054	MSC
PX	200		98 - 07	1		3053	MSC		
GT60	250	(Special anniversary model)	06 - 06	1		3060	MSC	3054	MSC
GTS	250	ie ABS	05 - 11	1		3060	MSC	3054	MSC
GTV	250	ie	07 - 09	1		3060	MSC	3054	MSC
GTS	300		11 - 13	1		3060	MSC	3054	MSC
GTS	300	ie	08 - 12	1		3060	MSC	3054	MSC
GTS	300	Touring ie	11 - 13	1		3060	MSC	3054	MSC
GTS	300	Super	10 - 13	1		3060	MSC	3054	MSC
GTS	300	Supersport	10 - 13	1		3060	MSC	3054	MSC
GTV	300	(4T)	10 - 13	1		3060	MSC	3054	MSC

YAMAHA

XC	115	S D'elight	14 -	1		3099	MSC	T	
	125	NMAX	15 -	1		3099	MSC	3099	MSC
	125	Tricity	14 -	1	L	3106	MSC	3108	MSC
	125	Tricity	14 -	1	R	3107	MSC		
HW	125	Xenter	12 -	1		3098	MSC	T	
VP	125	X-City	08 -	1		3059	MSC	3057	MSC
XC	125	Cygnus	96 - 03	1		3069	MSC	T	
XC	125	Vity	08 -	1		3099	MSC	T	
XC	125	R Majesty S	15 -	1		3065	MSC	NA	
XN	125	Teos	00 - 03	1		3013	MSC	T	
XQ	125	Maxster	01 - 03	1		3028	MSC	3057	MSC
YP	125	BLACK X-Max	09 -	1		3085	MSC	3057	MSC
YP	125	Majesty	98 - 00	1		3028	MSC	T	
YP	125	Majesty	01 - 09	1		3028	MSC	3057	MSC
YP	125	R X-Max	06 - 09	1		3085	MSC	3057	MSC
YP	125	R X-Max	11 - 17	1		3097	MSC	3057	MSC
YP	125	R X-Max (Heng Tong Caliper)	14	1		3097	MSC	3112	MSC
YP	125	R X-Max ABS	11 -	1		3097	MSC	3095	MSC
YW	125	Z (BW'S 125)	10 -	1		3098	MSC	T	
XC	150	Fly One R	98 -	1		3008	MSC	T	

1 - 2 = Nombre de jeux avant / Number of front sets / Anzahl Sets / Numero blister / Numero des juegos
L = Gauche / Left / Links / Sinistra / Izquierda
R = Droite / Right / Rechts / Destra / Derecha
NA = Non attribué / Not Available / Nicht verfügbar / Non disponible / No disponible

T = Tambour / Mechanical drum / Strommel / Tamburo / Tambor

YAMAHA

XN	150	Teos	02 -	1	**3013**	MSC	**T**	
XQ	150	Maxter	01 -	1	**3028**	MSC	**3057**	MSC
YP	150	Majesty	01 -	1	**3028**	MSC	**3057**	MSC
YP	180	R Majesty	04 -	1	**3028**	MSC	**3057**	MSC
YP	180	R Majesty	03	1	**3028**	MSC	**T**	
CP	250	Maxam / Morphus	05 - 08	1	**3025**	MSC	**3075**	MSC
YP	250	Majesty	96 - 98	1	**3025**	MSC	**T**	
YP	250	Majesty DX / ABS	98 - 99	1	**3025**	MSC	**3033**	MSC
YP	250	Majesty	99 - 03	1	**3025**	MSC	**3033**	MSC
VP	250	X-City	07 -	1	**3059**	MSC	**3033**	MSC
YP	250	R X-Max	05 - 09	1	**3085**	MSC	**3033**	MSC
YP	250	R X-Max	10 - 13	1	**3059**	MSC	**3033**	MSC
YP	250	R X-Max (Heng Tong Caliper)	14 - 16	1	**3059**	MSC	**3112**	MSC
YP	250	R X-Max ABS	10 - 13	1	**3059**	MSC	**3095**	MSC
YP	250	R X-Max ABS	14 - 16	1	**3059**	MSC	**3095**	MSC
XC	300	Versity	03 - 05	1	**3028**	MSC	**3028**	MSC
XC	300	Versity	06 -	1	**3059**	MSC	**3028**	MSC
YP	400	Majesty	04	1	**3058**	MSC	**3075**	MSC
YP	400	Majesty	05 -	2	**3025**	MSC	**3075**	MSC
YP	400	X-Max	13 -	2	**3097**	MSC	**3089**	MSC
XP	500	T-Max (N/P/R)	01 - 03	1	**3058**	MSC	**3061**	MSC
XP	500	T-Max (S/T/V) (Pin for hand brake)	04 - 07	2	**3025**	MSC	**3075**	MSC
XP	500	T-Max (4B5) (Pin for hand brake)	08 -	2	**3091**	MSC	**3075**	MSC
XP	530	T-Max	12 -	2	**3091**	MSC	**3061**	MSC
XP	530	T-Max ABS	12 - 14	2	**3091**	MSC	**3061**	MSC
XP	530	T-Max ABS	15 - 16	2	**3091**	MSC	**3061**	MSC
XP	530	T-Max / DX / SX	17 -	2	**3091**	MSC	**3061**	MSC

1 - 2 = Nombre de jeux avant / Number of front sets / Anzahl Sets / Numero blister / Numero des juegos
L = Gauche / Left / Links / Sinistra / Izquierda
R = Droite / Right / Rechts / Destra / Derecha
NA = Non attribué / Not Available / Nicht verfügbar / Non disponible / No disponible

T = Tambour / Mechanical drum / Strommel / Tamburo / Tambor

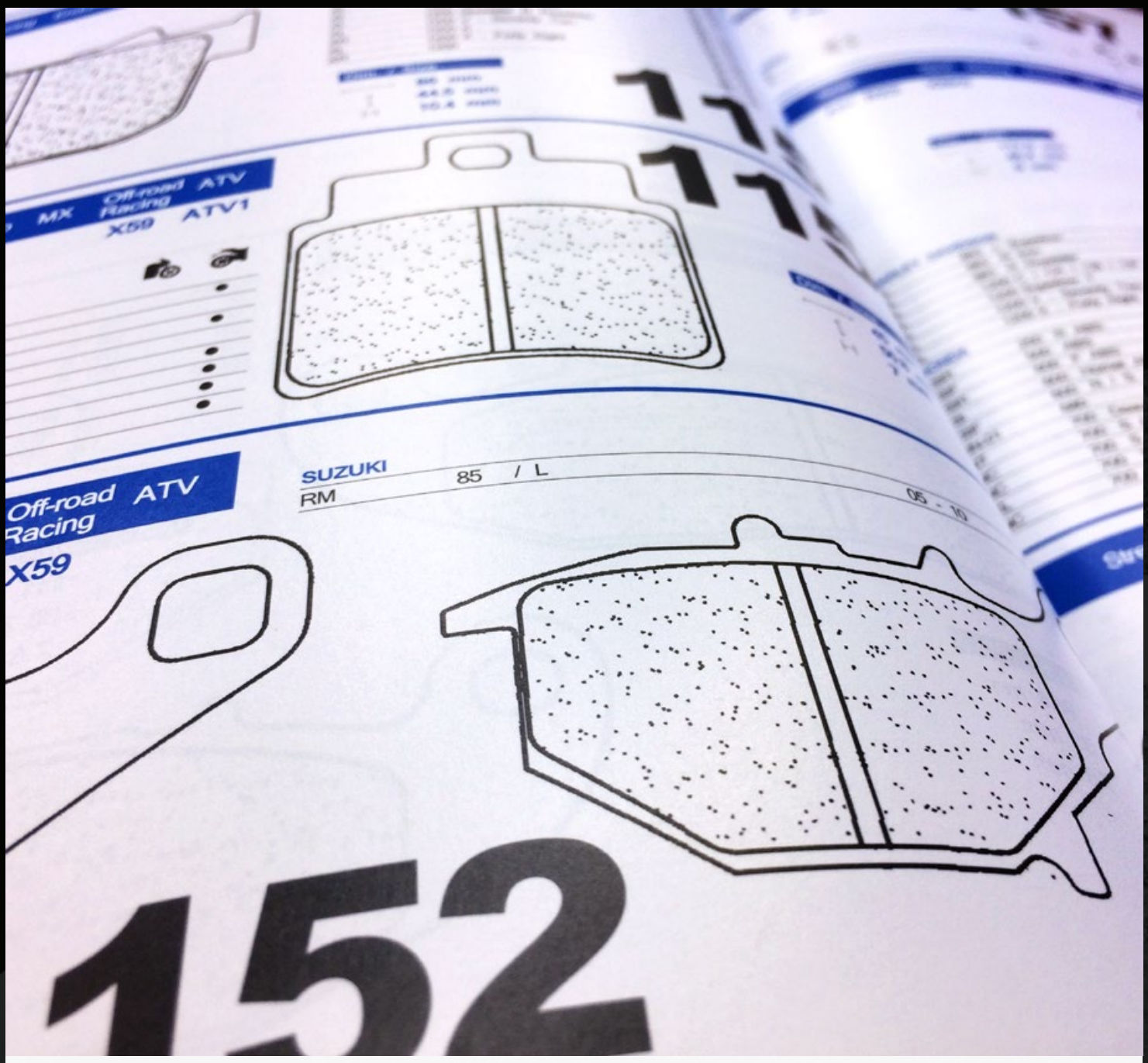

Dessins
Drawings

Dessins des plaquettes / Pad drawings / Zeichnungen Bremsbeläge / Disegni pastiglie / Dibujos de pastillas

Street			Sport	Racing	Enduro	MX	Off-road Racing	ATV
S4	A3+	RX3	XBK5	C60				

Applications
Applications

Nuances disponibles
Available compounds

Référence
Reference

2384

(EXEMPLE)

Dessin de plaquette (taille réelle)
Pad drawing (real size)

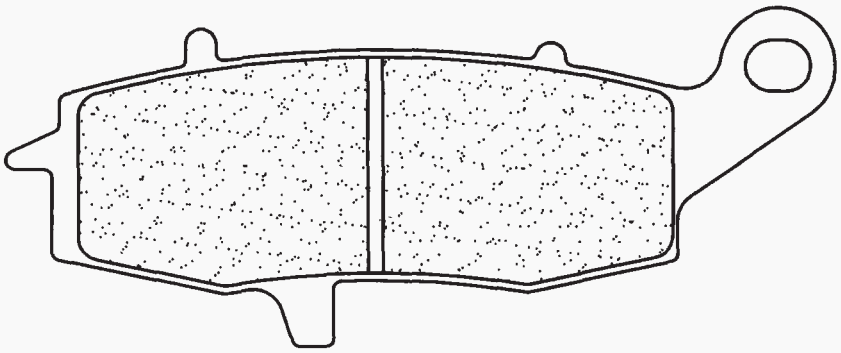

Année
Year

Avant
Front

Arrière
Rear

KAWASAKI							
EX	400	Ninja R	11 -	1	R	●	
ER-6	650	N/F	06 -	1	R	●	
KLE	650	Versys	06 - 14	1	R	●	
W	650		99 -	1		●	
Z	750	S	05 - 06	1	R	●	
ZR-7	750	S	01 - 03		L		●
ZR-7	750	S	01 - 03	1	R	●	

Dim. / Size

109.3 mm — Largeur / Width
44.4 mm — Hauteur / Height
8.3 mm — Épaisseur / Thickness

Nombre de jeux avant
Number of front sets

Plaquette gauche (L) / plaquette droite (R)
Left pad (L) / right pad (R)

1 - 2 = Nombre de jeux avant / Number of front sets / Anzahl Sets / Numero blister / Numero des juegos
L = Gauche / Left / Links / Sinistra / Izquierda - R = Droite / Right / Rechts / Destra / Derecha

Street	Sport	Racing	Enduro	MX	Off-road Racing	ATV
A3+	XBK5	C60				

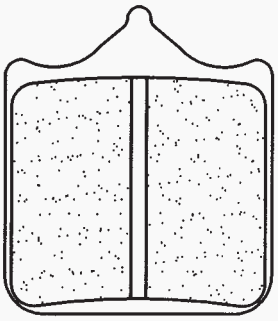

1033

Dim. / Size

35 mm
40.5 mm
7.5 mm

APRILIA				
RSV	1000	02 -	2	●
RSV	1000 Factory Pista	04 -	2	●
RSV	1000 Nera	04 -	2	●
RSV	1000 R	01 - 02	2	●
RSV	1000 R Factory Replica	04 -	2	●
RSV	1000 Tuono Fighter	03 - 05	2	●
BENELLI				
BX	449 Supermotard	08 -	1	●
	500 Leoncino	18 -	2	●
BN	600 i	13	2	●
2ue	756 Cue	07 - 09	2	●
	900 Tornado Tre	03 -	2	●
	900 Tornado Tre RS (Rad.cal)	04 -	2	●
TNT	1130 Café Racer	05 -	2	●
TNT	1130 Officine	07 -	2	●
TNT	1130 Sport / Titanium	05 -	2	●
	1130 Tornado	08 -	2	●
BIMOTA				
DB6	992 Delirio	05 - 07	2	●
DB5	992 Mille	05 - 07	2	●
SB8K	996 Santamonica	06	2	●
DB5	1000 Delirio	07 -	2	●
DB5	1000 Mille	05 -	2	●
DB5	1000 S	07 -	2	●
DB10	1078 B.Motard	12 - 13	2	●
DB6	1078 Delirio / Delirio R	07 - 11	2	●
DB6E	1078 Delirio / Delirio R	12 -	2	●
DB5E	1078 Desiderio	12 - 13	2	●
DB5	1078 S / R	07 - 09	2	●
3D	1078 Tesi	09 - 13	2	●
DB9	1098 Brivido	12 - 13	2	●
DB11	1098 VLX	12 - 13	2	●
DB7	1098	08	2	●
DB11	1098	12 - 13	2	●
DB12	1198 B.Tourist	12 - 13	2	●
BMW				
G	450 SMR	09 -	1	●
BREMBO				
P4 34x34 Gold (Road / Racing)			2	●
P4 34x34 Radial caliper (Road / Racing)			2	●
CAGIVA				
	1000 X-Raptor	03 -	2	●
	1000 X3 Raptor	04 -	2	●
DERBI				
	659 Mulhacén	06 -	1	●
	659 Mulhacén Cafe	08 -	1	●
DUCATI				
	748 R	01 - 03	2	●
	749 / S	03 -	2	●
	749 R / Dark	04 -	2	●
	996 R	01	2	●
	998 Monster S4RS	06	2	●
	998 R	02	2	●
	999 / S / R	03 -	2	●
	999 Monster S4R/RS	07 - 08	2	●
	999 R Xerox	06 -	2	●
	999 RS	04 -	2	●
	1000 Hypermotard	06 -	2	●
	1000 Monster S4Rs Testatretta	06 -	2	●

GILERA				
	600 Supersport	03 -	2	●
HUSQVARNA				
SM	450 R	05	1	●
SM	450 R	09 -	1	●
SM	450 R / RR	06 - 08	1	●
SM	510 R	06	1	●
SMR	511	11 -	1	●
SM	610	06	1	●
SM	630	10 -	1	●
STR	650 CRC	07 -	1	●
SM	701 Supermoto	15 -	1	●
HYOSUNG				
RX	450 SM	08 -	1	●
KTM				
	690 Duke	08 - 11	2	●
	690 Duke R	10 - 11	1	●
	690 SMC	08 - 10	1	●
	690 SMC R	12 - 14	1	●
	950 Duke	03 -	2	●
	950 SM	05 -	2	●
	950 SMR	07	2	●
	990 SMR	09 -	2	●
	990 SMT	09 - 13	2	●
	990 Super Duke	05 -	2	●
	990 Super Duke R	09 -	2	●
	990 Supermoto R / SM-R	08 - 09	2	●
LAVERDA				
SFC	1000 (Rad.cal)	04 -	2	●
MONDIAL				
	1000 Evo (Rad.cal)	04 -	2	●
	1000 Piega	03 -	2	●
	1000 RZ Nuda	04 -	2	●
	1000 Starfighter (Rad.cal)	04 -	2	●
MOTO GUZZI				
	1200 Corsa MGS-01	07 -	2	●
MOTO MORINI				
	1200 Granferro	10	2	●
	1200 Rebello Giubileo	12 - 13	2	●
MV AGUSTA				
	910 Brutale R (Brembo)	05 - 08	2	●
	1000 F4 R (Brembo)	06 - 07	2	●
	1000 F4 RR 312 (Brembo)	07	2	●
	1000 F4 Senna	06	2	●
NORTON				
	961 Commando Café Racer	10 - 14	2	●
	961 Commando SE	10 - 11	2	●
	961 Commando SF	13 - 14	2	●
SHERCO				
	450 SM 4.5i F (Black Panther)	08 - 10	1	●
	510 SM 5.1i F Black Panther	08 - 10	1	●
TM				
SMM	125 Black Dream (2T)	08 - 10	1	●
SMM	250 F (4T)	10	1	●
SMR	250 F (4T)	10	1	●
SMX	450 F	05 - 10	1	●
SMR	450 F (4T)	10	1	●
SMM	450 F Black Dream ES	08 - 10	1	●
SMR	530 F	10	1	●
SMX	530 F	05 - 10	1	●
SMM	530 F Black Dream ES	08 - 10	1	●
SMX	660 F	05 - 10	1	●
TRIUMPH				
	1050 Speed Triple (Brembo Rad.cal)	08 - 10	2	●
	1050 Speed Triple (Brembo Rad.cal)	11 - 15	2	●
VOXAN				
	1000 Charade Racing	06	2	●
	1200 GTV	08 -	2	●

1 - 2 = Nombre de jeux avant / Number of front sets / Anzahl Sets / Numero blister / Numero des juegos
L = Gauche / Left / Links / Sinistra / Izquierda - R = Droite / Right / Rechts / Destra / Derecha

Street	Sport	Racing	Enduro	MX	Off-road Racing	ATV

MX10

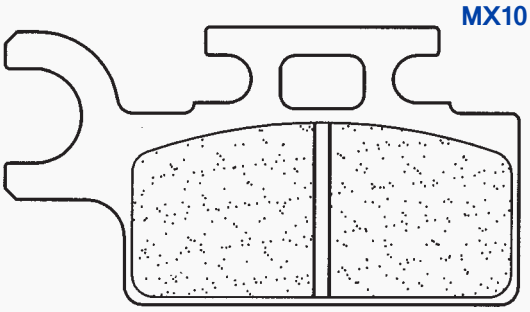

Dim. / Size
67.6 mm
35 mm
7.5 mm

KAWASAKI				
KX	65	00 -	1	●
SUZUKI				
RM	65	03 - 05	1	●

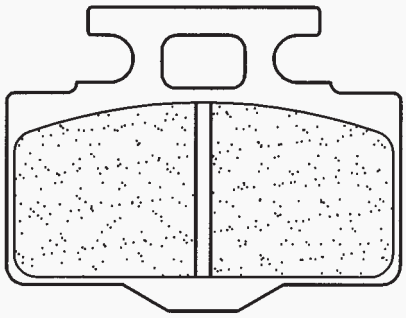

1034

Dim. / Size
51.8 mm
40 mm
7.5 mm

Street	Sport	Racing	Enduro	MX	Off-road Racing	ATV

RX3

YAMAHA			
XJR	400	02 -	●
FZS	1000 Fazer	01 - 05	●
XJR	1300 Racer	15 -	●
XJR	1300	02 - 14	●

1066

Dim. / Size
63.4 mm
60.3 mm
8.7 mm

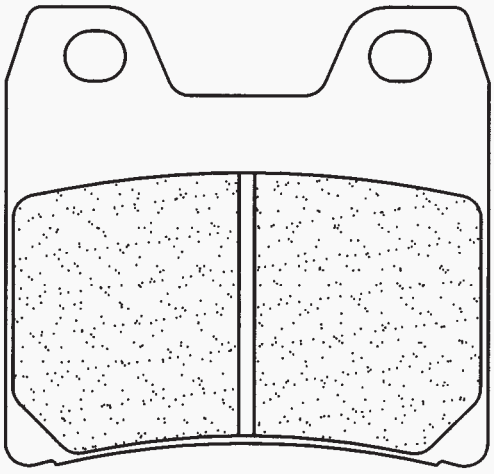

Street	Sport	Racing	Enduro	MX	Off-road Racing	ATV

S4 RX3

1067

Dim. / Size
91.5 mm
40 mm
10 mm

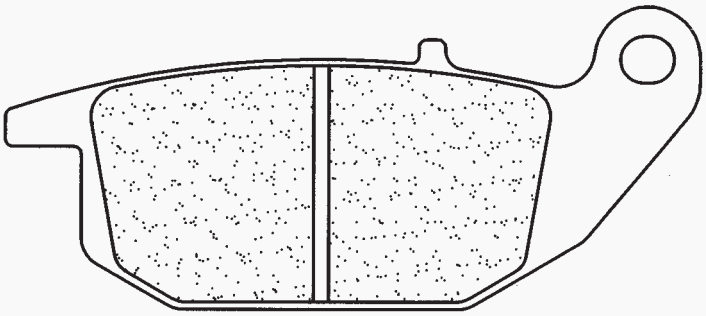

Dim. / Size
107.2 mm
42.7 mm
10 mm

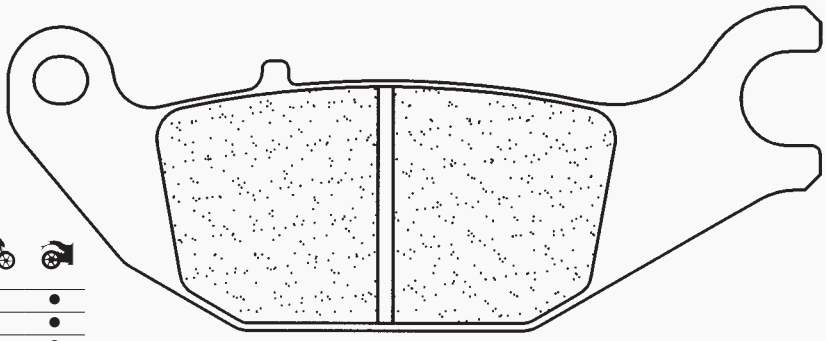

HONDA			
CBR	125 R	04 - 10	●
XLV	125 Varadero	01 -	●
CBR	150 R	00 -	●

1 - 2 = Nombre de jeux avant / Number of front sets / Anzahl Sets / Numero blister / Numero des juegos
L = Gauche / Left / Links / Sinistra / Izquierda - R = Droite / Right / Rechts / Destra / Derecha

Street	Sport	Racing	Enduro	MX	Off-road Racing	ATV

C60

1075

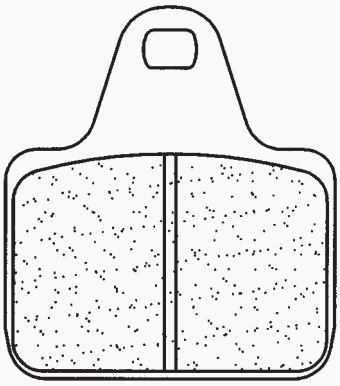

Dim. / Size
43.2 mm
48.7 mm
10 mm

PVM		
Radial caliper (Racing)	2	●

Street	Sport	Racing	Enduro	MX	Off-road Racing	ATV

X59

1076

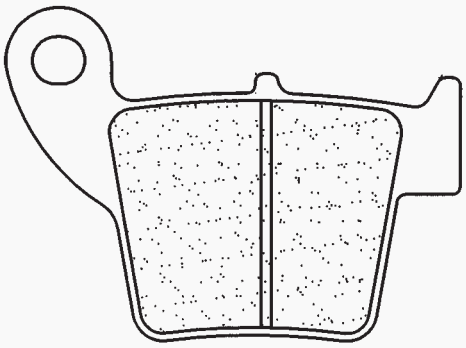

Dim. / Size
60 mm
43.2 mm
9.6 mm

APRILIA				
MXV	450		09 -	●
HM				
CRE	125	Enduro	02 - 07	●
CR	125	X Supermotard	04 - 06	●
CRM	125	X Supermotard	07	●
CRF	230	Enduro / Trial	04 - 07	●
CRF	250	F	04 - 08	●
CRE	250	R Enduro	02 - 07	●
CRF	250	Supermotard	04 - 06	●
CRM	250	X Supermotard	07 -	●
CRE	450	F	02	●
HM				
CRE	450	F / X	04 - 07	●
CRM	450	F Supermotard R	07 - 08	●
CRM	450	F Supermotard X	07	●
CRF	450	R	04 - 08	●
CRE	450	R Enduro	02 - 07	●
CRF	450	R Enduro	04 - 08	●
CRF	450	R Supermotard	02 - 06	●
CRM	490	F Supermotard X	07	●
CRE	490	X	07	●
HONDA				
CR	125	R	02 -	●
CRE	125		02 -	●
CRE	250	F	04 -	●
CR	250	R	02 -	●
CRF	250	R	04 - 09	●
CRF	250	R Efi	10 -	●
CRF	250	X	04 - 09	●
CRE	250		02 - 03	●
CRE	450	F	02 -	●
CRF	450	R	02 - 08	●
CRF	450	R Efi	09 -	●
CRF	450	X	05 -	●
SUZUKI				
RME	50		10 -	●

Street	Sport	Racing	Enduro	MX	Off-road Racing	ATV

MX10 X59

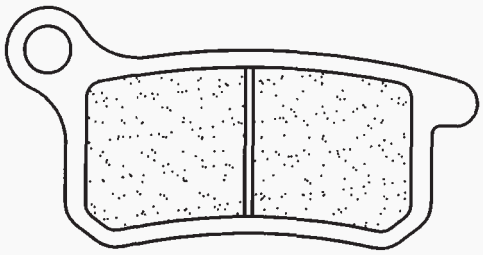

Dim. / Size
62 mm
31.4 mm
6.3 mm

1078

HUSQVARNA					
CR	65	12 -	1	●	
KTM					
SX	65	02 - 03	1	●	
SX	65	04 - 08	1	●	
SX	65	09 -	1	●	●
SX	85	03 - 10	1	●	●
SX	85	11	1	●	

Street	Sport	Racing	Enduro	MX	Off-road Racing	ATV

A3+ XBK5 C60

1083

Dim. / Size
67.4 mm
49.6 mm
7 mm

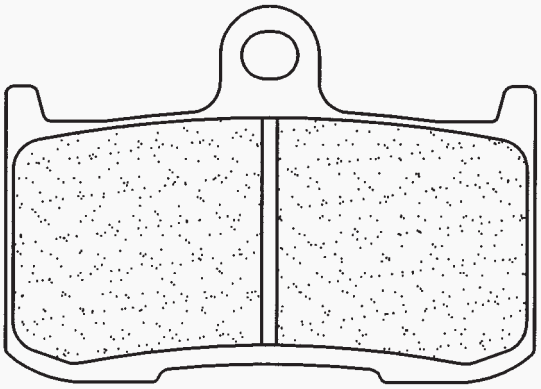

1 - 2 = Nombre de jeux avant / Number of front sets / Anzahl Sets / Numero blister / Numero des juegos
L = Gauche / Left / Links / Sinistra / Izquierda - R = Droite / Right / Rechts / Destra / Derecha

1083 suite

Street	Sport	Racing	Enduro	MX	Off-road Racing	ATV
A3+	XBK5	C60				

INDIAN					
	1800 Chief Classic (Nissin calipers)	14 -	2	●	
	1800 Chief Vintage (Nissin calipers)	14 -	2	●	
	1800 Chieftain (Nissin calipers)	14 -	2	●	
	1800 Chief Roadmaster Classic / Elite	15 -	2	●	
KAWASAKI					
Z	800	13 - 16	2	●	
Z	800 E (ABS)	13 - 16	2	●	
Z	900	17 -	2	●	
ZX9-R	900 Ninja	02 - 03	2	●	
Z	1000	03 - 06	2	●	
NISSIN					
4 Piston Radial caliper (Road / Racing)			1	●	
SUZUKI					
GSX	1340 B-King	08 - 12	2	●	
TRIUMPH					
	675 Daytona (Rad.cal)	06 - 08	2	●	
	675 Street Triple R	09 - 12	2	●	
	675 Street Triple R	13 - 14	2	●	
	675 Street Triple RX	15 -	2	●	
	1050 Speed Triple (Nissin Rad.cal)	05 - 07	2	●	

TRIUMPH					
	1050 Tiger	07 - 11	2	●	
	1050 Tiger SE (ABS)	10 - 13	2	●	
	1050 Tiger Sport (ABS)	13 - 14	2	●	
VICTORY					
Kingpin	1634 8-Ball / Low / Tour	08 - 10	1	●	
Vegas	1634 / Low	08 - 10	1	●	
Vegas	1634 8-Ball	08 - 10	1	●	
Vegas	1634 Cory Ness Jackpot	08 - 10	1	●	
Hammer	1731 / S	08 - 10	2	●	
Hammer	1731 8-ball	10 -	2	●	
Vegas	1731 Jackpot	10 -	2	●	
Cross Country	1731	10 -	2	●	
Cross Roads	1731	10 -	2	●	
Vegas	1731	08 - 10	1	●	

1084

Street	Sport	Racing	Enduro	MX	Off-road Racing	ATV
RX3						

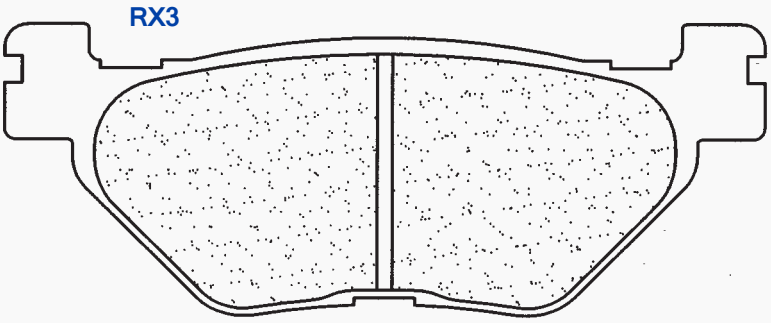

Dim. / Size
100 mm
38.5 mm
9.6 mm

HYOSUNG			
GV	650 Aquila	04 - 05	●
YAMAHA			
TDM	900	02 -	●
TDM	900 ABS	05 -	●
SCR	950	17 -	●
XVS	950 A Midnight Star	09 -	●
XVS	950 Bolt / Bolt R	14 -	●
XT	1200 Z Super Ténéré (ABS/UBS)	10 - 13	●
XT	1200 Z/ZE Super Ténéré (ABS/UBS)	14 -	●
FJR	1300	01 - 02	●
FJR	1300 / ABS	03 - 05	●
FJR	1300 A / AS ABS	06 -	●
XVS	1300 A Midnight Star	07 -	●
FJR	1300 AE	14 -	●
XVS	1300 Custom	14 -	●
XV	1700 A / PC Road Star	02 - 05	●
XV	1700 Y V-Max	09 -	●
XV	1900 A Midnight Star	06 - 12	●
XV	1900 A Midnight Star / CFD	13 - 14	●

1089

Street	Sport	Racing	Enduro	MX	Off-road Racing	ATV
RX3				MX10		

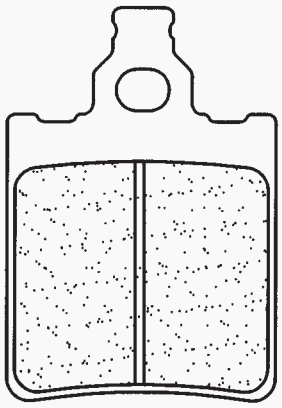

Dim. / Size
35.3 mm
51.5 mm
7 mm

APRILIA				
	125 Tuareg Wind	88		●
	240 Climber	89 - 90		●
	275 Climber	89 - 90		●
BETA				
ALP	350 4.0	04 - 05		●

BETA				
	350 4.0 Motard	04 -		●
CAGIVA				
	50 Blues	89		●
	50 Cocis	88 -		●
	50 Lucky Explorer	88 -		●
	80 Cocis	91 -		●
W8	125	84 -		●
W8	125 / R	94 -		●
	125 Cruiser	87		●
	125 N90	91 -		●
	125 Tamanaco	88 - 89		●
FANTIC				
	50 Oasis	90 -		●
	75 Oasis	89 -		●
GARELLI				
	125 Tiger XLE	86 -		●
GILERA				
X 1	125	89		●
JCM				
	325 Europa	89		●
KEEWAY				
TX	125 SM	10 -		●
KTM				
SX	65	00 - 01		●
SX	65	02 - 03		●
MALAGUTI				
MDX	50	86 -	1	●

1 - 2 = Nombre de jeux avant / Number of front sets / Anzahl Sets / Numero blister / Numero des juegos
L = Gauche / Left / Links / Sinistra / Izquierda - R = Droite / Right / Rechts / Destra / Derecha

Street	Sport	Racing	Enduro	MX	Off-road Racing	ATV
A3+	XBK5					

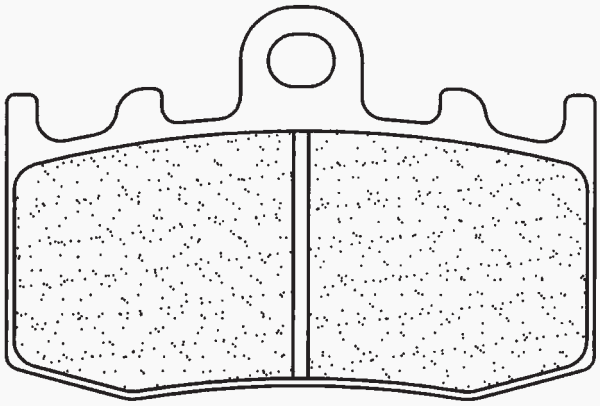

1101

Dim. / Size

77.2 mm
51.5 mm
8.5 mm

BMW				
R	850 RT ABS	01 - 2	●	
R	1100 S (Brembo)	01 - 2	●	
R	1150 GS / GS Adventure	02 - 2	●	
R	1150 RT ABS	01 - 2	●	
R	1200 GS	04 - 12 2	●	
K	1200 GT ABS	02 - 04 2	●	
K	1200 GT ABS	05 - 2	●	
HP2	1200 Megamoto	07 - 2	●	
K	1200 RS	02 - 2	●	
R	1200 RT	05 - 07 2	●	
R	1200 RT	07 - 09 2	●	
R	1200 RT	10 - 13 2	●	
K	1200 S	05 - 2	●	
R	1200 S	05 - 2	●	
R	1200 ST	05 - 2	●	
K	1300 GT	09 - 2	●	
K	1300 S	09 - 2	●	
K	1300 S Motorsport	15 - 2	●	

Street	Sport	Racing	Enduro	MX	Off-road Racing	ATV
					X59	ATV1

1102

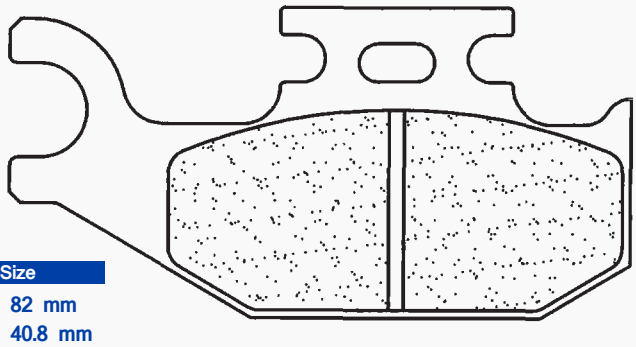

Dim. / Size

82 mm
40.8 mm
9.5 mm

Dim. / Size

62 mm
40.8 mm
9.5 mm

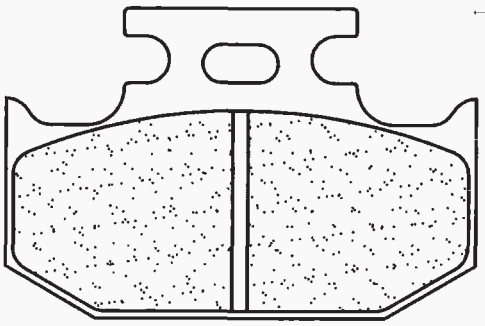

BOMBARDIER				
330	Outlander	03 - 1 R	●	
400	Outlander	03 - 1 R	●	
400	Outlander Max	03 - 1 R	●	
500	Quest	02 - 1 R	●	
500	Traxter 4X4	02 - 1 R	●	
500	Traxter 4x4 Max	02 - 1 R	●	
650	DS	01 - 1 R	●	
650	Quest	02 - 1 R	●	
650	Quest Max	02 - 1 R	●	
650	Traxter Max	03 - 1 R	●	
800	Outlander	06 - 1 R	●	
800	Outlander XT	06 - 1 R	●	
CAN-AM				
400	Outlander EFI	09 - L		●
400	Outlander EFI	09 - 1 R	●	
400	Outlander Max STD	07 - L		●

CAN-AM				
400	Outlander Max STD	07 - 1 R	●	
400	Outlander MAX XT	07 - L		●
400	Outlander MAX XT	07 - 1 R	●	
400	Outlander STD	07 - L		●
400	Outlander STD	07 - 1 R	●	
400	Outlander XT	07 - L		●
400	Outlander XT	07 - 1 R	●	
500	Outlander Max STD	07 - L		●
500	Outlander Max STD	07 - 1 R	●	
500	Outlander MAX XT	07 - L		●
500	Outlander MAX XT	07 - 1 R	●	
500	Outlander STD	07 - L		●
500	Outlander STD	07 - 1 R	●	
500	Outlander XT	07 - L		●
500	Outlander XT	07 - 1 R	●	
500	Renegade	08 - L		●
500	Renegade	08 - 1 R	●	
650	Outlander Max STD	07 - L		●
650	Outlander Max STD	07 - 1 R	●	
650	Outlander MAX XT	07 - L		●
650	Outlander MAX XT	07 - 1 R	●	
650	Outlander STD	07 - L		●
650	Outlander STD	07 - 1 R	●	
650	Outlander XT	07 - L		●
650	Outlander XT	07 - 1 R	●	
800	Outlander Max LTD	07 - L		●
800	Outlander Max LTD	07 - 1 R	●	
800	Outlander Max STD	07 - L		●
800	Outlander Max STD	07 - 1 R	●	
800	Outlander MAX XT	07 - L		●
800	Outlander MAX XT	07 - 1 R	●	
800	Outlander STD	07 - L		●
800	Outlander STD	07 - 1 R	●	
800	Outlander XT	07 - L		●
800	Outlander XT	07 - 1 R	●	
800	Renegade	08 - L		●
800	Renegade	08 - 1 R	●	
800	Renegade Efi	07 - L		●
800	Renegade Efi	07 - 1 R	●	
800	Renegade X	08 - L		●
800	Renegade X	08 - 1 R	●	
1000	Commander Max	14 - R		●
1000	Maverick	13 - 1 R	●	●
CANNONDALE				
440	Blaze	03 - 1 R	●	
440	Cannibal	03 - 1 R	●	
440	Glamis	03 - 1 R	●	
440	Moto	03 - 1 R	●	
440	Speed	03 - 1 R	●	
SUZUKI				
LT-A	500 FK2 - FK7 Vinson	02 - 07		●
LT-A	650 FK2 Vinson	02 -		●
YAMAHA				
YXR	450 Rhino	06 - L		●
YXR	660 Rhino	04 - 06 L		●
YFM	700 R Raptor	06 - L		●

1 - 2 = Nombre de jeux avant / Number of front sets / Anzahl Sets / Numero blister / Numero des juegos
L = Gauche / Left / Links / Sinistra / Izquierda - R = Droite / Right / Rechts / Destra / Derecha

Street	Sport	Racing	Enduro	MX	Off-road Racing	ATV

RX3 **X59**

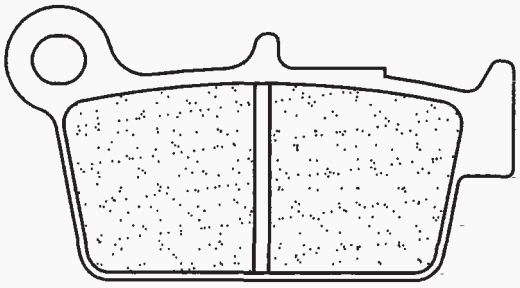

Dim. / Size

66.9 mm
36 mm
10.9 mm

1103

APRILIA				
RXV	450	Enduro	06 -	●
SXV	450	Van den Bosh Rep.	08 -	●
SXV	450		06 -	●
RXV	550	Enduro	06 -	●
SXV	550	Van den Bosh Rep.	08 -	●
SXV	550		06 -	●
BETA				
RR	250	Enduro	05 -	●
RR	300		13 -	●
TR	300	Crosstrainer	15 -	●
RR	350	Efi / Efi Racing	15 -	●
RR	350	Enduro	12 - 14	●
RR	390		15 -	●
RR	400	Enduro	05 -	●
RR	430	Racing	15 -	●
RR	430		15 -	●
RR	450	Enduro	05 -	●
RR	480	Racing	15 -	●
RR	480		15 -	●
RR	498	Enduro	12 -	●
RR	525	Enduro	05 -	●
GAS GAS				
EC	450	F (4T)	13 - 14	●
EC	450	Raid (4T)	14 -	●
KAWASAKI				
KX-F	250		04 - 10	●
KX-F	250	DFI	11 -	●
KX-F	450		06 - 08	●
KX-F	450	DFI	09 -	●
KLX	450	R	07 -	●
SHERCO				
SE	250	Enduro 2.5i (4T) Inc.	08 - 10	●
	250	SM 2.5i Supermotard (4T)	08 -	●
	250	SX 2.5i F Moto Cross	10 -	●
SE	300	Enduro 3.0i (4T)	10 - 11	●
SE	300	Enduro 3.0i (4T)	12 -	●
	450	Enduro 4.5i (4T)	04 - 10	●
	450	SM 4.5i F (Black Panther)	08 - 10	●
	450	SM 4.5i F (Supermotard)	04 - 10	●
	510	Enduro 5.1i F	07 - 10	●
	510	SM 5.1i F Black Panther	08 - 10	●
	510	SM 5.1i F Supermotard	07	●
SUZUKI				
RM-E	125		05 -	●
RM-Z	250	E	04 - 09	●
RM-Z	250	Efi	10 -	●
RME	250		05 -	●
RM-X	450		05 -	●
RM-Z	450		05 - 07	●
RM-Z	450	Efi	08 -	●
YAMAHA				
YZ	125	R / S / T / V / W	03 - 07	●
YZ	125	X / Y / Z	08 -	●
YZ	250	FR / FS / FT / FV (4T)	03 - 06	●
WR	250	FR/FS/FT/FV	03 - 06	●
WR	250	FW/FX/FY/FZ	07 - 15	●
WR	250	F	16 -	●
YZ	250	FW/FX/FY/FZ/FA/FB/FD/FE (4T)	07 -	●
WR	250	R	08 -	●
YZ	250	R / S / T / V / W (2T)	03 - 07	●
YZ	250	X / Y / Z (2T)	08 -	●
WR	250	X Supermotard	08 -	●
WR	450	FR / FS / FT / FV (4T)	03 - 06	●
YZ	450	FR / FS / FT / FV (4T)	03 - 06	●
YZ	450	FW (4T)	07	●
WR	450	FW / FX / FY / FZ (4T)	07 -	●
YZ	450	FX / FY / FZ (4T)	08 -	●

Street	Sport	Racing	Enduro	MX	Off-road Racing	ATV

RX3 **X59**

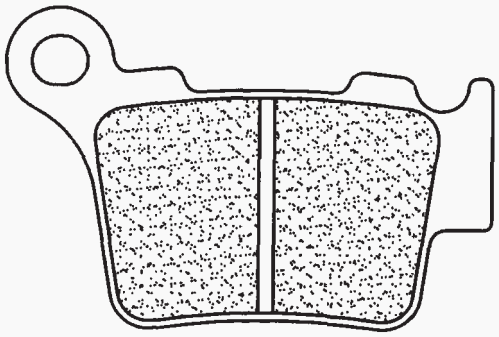

Dim. / Size

63.9 mm
42 mm
9.5 mm

1108

BMW				
G	450	Enduro	08 -	●
G	450	SMR	09 -	●
HUSABERG				
TE	125	(2T)	12 -	●
TE	250	(2T)	11 -	●
FE	250	(4T)	13 -	●
TE	300	(2T)	11 -	●
FE	350	(4T)	13 -	●
FE	390		10 - 12	●
HUSABERG				
FE	450		09 - 13	●
FX	450		10 - 11	●
FE	501	(4T)	13 -	●
FS	570	Supermoto	10 -	●
FE	570		09 - 12	●
HUSQVARNA				
CR	125		05 -	●
TC	125	(2T)	14 -	●
TE	125	(2T)	14 -	●
CR	250		05 -	●
FC	250	(4T)	14 -	●
FE	250	(2T)	14 -	●
TC	250		04 -	●
TC	250	(2T)	14 -	●
TE	250	(2T)	14 -	●
TE	250	(4T)	06 - 13	●
TE	250	Meo Replica (4T)	11	●
TE	250	R (4T)	13	●
TC	300		14 -	●
TE	300	(2T)	14 -	●
TE	310	(4T)	10 - 13	●
TE	310	R (4T)	13	●
FC	350		14 -	●
FE	350		14 -	●
TC	449	(4T)	11 - 13	●
TE	449	(4T)	11 - 13	●
FC	450	(4T)	14 -	●
SM	450	R	09 -	●
SM	450	R / RR	06 - 08	●
FE	450		14 -	●
TC	450		04 -	●
TE	450		06 -	●
FE	501	(4T)	14 -	●
SM	510	R	06	●

1 - 2 = Nombre de jeux avant / Number of front sets / Anzahl Sets / Numero blister / Numero des juegos
L = Gauche / Left / Links / Sinistra / Izquierda - R = Droite / Right / Rechts / Destra / Derecha

1108 suite

Street	Sport	Racing	Enduro	MX	Off-road Racing	ATV
RX3					X59	

HUSQVARNA					
FS	450		15 -		●
TC	510		04 -		●
TE	510		06 -		●
TE	511	(4T)	11 -		●
SMR	511		11 -		●
SM	570	R	06		●
SM	610		06		●
SM	630		10 -		●
SMR	630		06 -		●
STR	650	CRC	07 -		●
KTM					
EXC	125	Enduro	04 -		●
SX	125		04 -		●
SX	144		07 - 08		●
SX	150		09 -		●
EXC	200	Enduro	04 -		●
SX	200		03 - 04		●
EXC	250	(2T)	15 -		●
EXC-F	250	Enduro (4T)	06 - 14		●
EXC	250	Enduro / Enduro (4T)	04 -		●
SX	250		03 -		●
SX-F	250		06 -		●
EXC	300	Enduro	04 -		●
EXC-F	350		11 -		●
SX-F	350		11 -		●
EXC	400	Racing	04 -		●
EXC	450	(4T) / 6 Days (4T) / Racing	04 -		●
SX	450	SM / SM Factory Replica	04 -		●
SX	450	SMR	04 - 06		●
SX	450	SMR	07 - 13		●
SX	450	SMR	14 -		●

KTM				
SX	450		03 -	●
XC-F	450		08 -	●
EXC	500	(4T) / 6 Days (4T)	12 - 14	●
SX-F	505		07 - 08	●
XC-F	505		09 -	●
EXC	525	Racing	04 -	●
SX	525	Racing	04 - 06	●
SX	525	SMR	04 - 05	●
EXC	530	Racing	08	●
SX	560	SMR	06	●
RIEJU				
	250	Marathon	09 - 10	●
	450	Marathon	09 - 10	●
SHERCO				
SE	250	/ R	14 -	●
SE	250	F / F-R	14 -	●
SE	250	i / iR	12 - 13	●
SE	250	i-F	13	●
SE	300	/ R	14 -	●
SE	300	Enduro 3.0i (2T)	12 - 14	●
SE	300	F / F-R	14 -	●
SE	300	i / iR	12 - 13	●
SE	300	i-F	13	●
SE	450	F / F-R	14 -	●
SE	450	i / iR	12 - 13	●
SE	510	iR	12 - 13	●
SWM				
	300	R	15 -	●

1110

Street	Sport	Racing	Enduro	MX	Off-road Racing	ATV
A3+	XBK5	C60				

DERBI					
	659	Mulhacén	05	1	●
KAWASAKI					
ZX6-RR	600	Ninja (Rad.cal)	03 - 06	2	●
ZX6-R	636	Ninja (Rad.cal)	03 - 06	2	●
ZX10-R	1000	Ninja (Rad.cal)	04 - 07	2	●
ZX12-R	1200	Ninja (Rad.cal)	04 -	2	●
VN	1600	Mean Streak	05 -	2	●
SUZUKI					
GSX-R	1000	K3 (Rad.cal)	03	2	●
M95	1600	Boulevard	05 -	2	●
M	1600	Intruder	05 -	2	●

Dim. / Size

38.6 mm
49.5 mm
9 mm

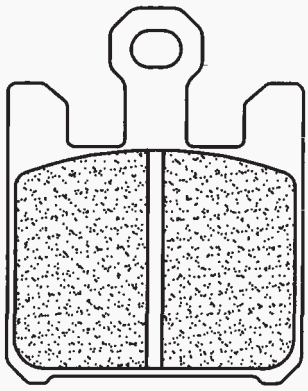

1123

Street	Sport	Racing	Enduro	MX	Off-road Racing	ATV
						ATV1

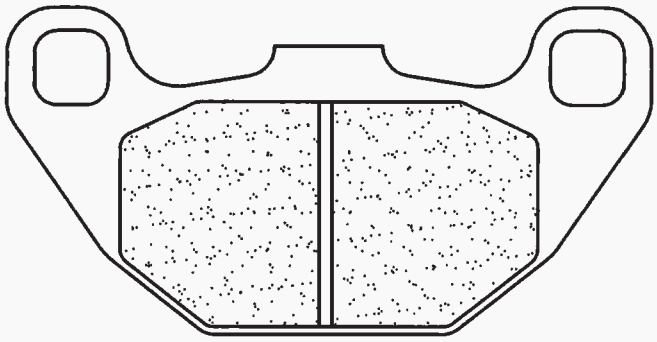

Dim. / Size

85 mm
43 mm
8.5 mm

ARCTIC CAT				
	50	DVX	06 -	●
	90	DVX	06 -	●
	150	2x4	09 -	●
KYMCO				
	50	MXer	00 - 07	●
	50	MXu	05 - 10	●
	90	Maxxer	05 - 06	●
	125	MXer	02 - 07	●
	150	MXer	02 - 07	●
	150	MXu	05 - 10	●

Dim. / Size

64 mm
36.8 mm
11 mm

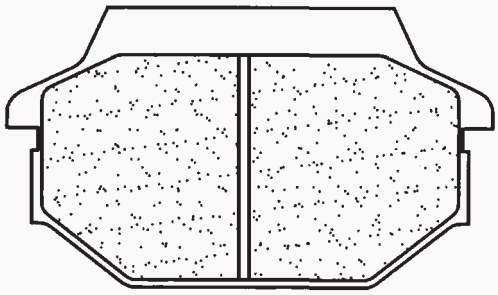

1 - 2 = Nombre de jeux avant / Number of front sets / Anzahl Sets / Numero blister / Numero des juegos
L = Gauche / Left / Links / Sinistra / Izquierda - R = Droite / Right / Rechts / Destra / Derecha

Street	Sport	Racing	Enduro	MX	Off-road Racing	ATV
				MX10	X59	

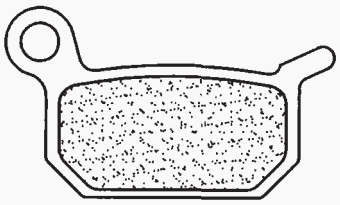

Dim. / Size
43.3 mm
25 mm
5 mm

1128

HUSQVARNA					
CR	50	Pro Senior	06 -		●
CR	50	Senior	06 -		●
KTM					
SX	50	Pro Junior LC	02 -	1	●
SX	50	Pro Senior LC	02 - 03	1	●
SX	50	Pro Senior LC	04 -	1	● ●
SX	50	Senior Adventure	04 -	1	●
SM	50		06 -	1	● ●
SX	65		04 - 08		●
LEM					
	50	R2 / R3 / R3 XC	03 -	1	● ●
RX	65		05 -	1	● ●
POLINI					
X1	50	R	04 -	1	● ●
X3	50	R	04 -	1	● ●
X5	65	RP	05 -	1	● ●

Street	Sport	Racing	Enduro	MX	Off-road Racing	ATV
	XBK5					

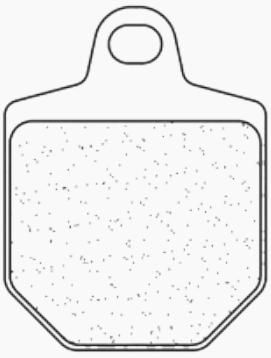

Dim. / Size
34.9 mm
45.9 mm
17 mm

1129

HM					
CRM	125	X Supermotard	07	1	●
CRM	250	X Supermotard	07 -	1	●
CRM	450	F Supermotard R	07 - 08	1	●
CRM	450	F Supermotard X	07	1	●
CRM	490	F Supermotard X	07	1	●
HUSABERG					
FS	570	Supermoto	10 -	1	●
KTM					
SX	450	SMR	07 - 13	1	●
SX	560	SMR	06	1	●

Street	Sport	Racing	Enduro	MX	Off-road Racing	ATV
A3+	XBK5	C60				

1133

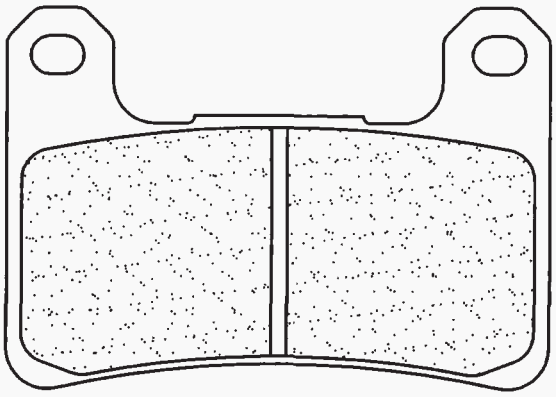

Dim. / Size
71.4 mm
50 mm
7.9 mm

KAWASAKI					
Z	900	RS / Cafe Racer	18	2	●
Z	1000	(Rad.cal)	10 - 13	2	●
Z	1000	(Rad.cal)	14 -	2	●
ZX10-R	1000	Ninja (Rad.cal)	08 - 10	2	●
ZX10-R	1000	Ninja (Rad.cal)	11 - 13	2	●
Z	1000	SX (Rad.cal)	11 - 13	2	●
Z	1000	SX (Rad.cal)	14 -	2	●
H2	1000	H2 SX SE / Tourer / Performance	18 -	2	●
Z	1000	Performance MY	17 -	2	●
Z	1000	SX Performance MY / Tourer	17 -	2	●
SUZUKI					
GSX-R	600	K4 / K5 (Rad.cal)	04 - 05	2	●
GSX-R	600	K6 / K7 (Rad.cal)	06 - 07	2	●
GSX-R	600	K8 / K9 / L0 (Rad.cal)	08 - 10	2	●
GSX-R	750	K4 / K5 (Rad.cal)	04 - 05	2	●
GSX-R	750	K6 / K7 (Rad.cal)	06 - 07	2	●
GSX-R	750	K8 / K9 / L0 (Rad.cal)	08 - 10	2	●
GSX-R	1000	K4 (Rad.cal)	04	2	●
GSX-R	1000	K5 / K6 (Rad.cal)	05 - 06	2	●
GSX-R	1000	K7 / K8 (Rad.cal)	07 - 08	2	●
GSX-R	1000	K9 / L0 (Rad.cal)	09 -	2	●
DL	1000	V-Strom ABS	14 -	2	●
GSX-R	1300	Hayabusa	08 - 12	2	●
M	1800	R Intruder	06 - 09	2	●
M	1800	R Intruder Boss	14 -	2	●
M	1800	R2 Intruder	08 - 09	2	●
M	1800	RZ	07 - 10	2	●

1 - 2 = Nombre de jeux avant / Number of front sets / Anzahl Sets / Numero blister / Numero des juegos
L = Gauche / Left / Links / Sinistra / Izquierda - R = Droite / Right / Rechts / Destra / Derecha

Street	Sport	Racing	Enduro	MX	Off-road Racing	ATV

A3+ XBK5 C60

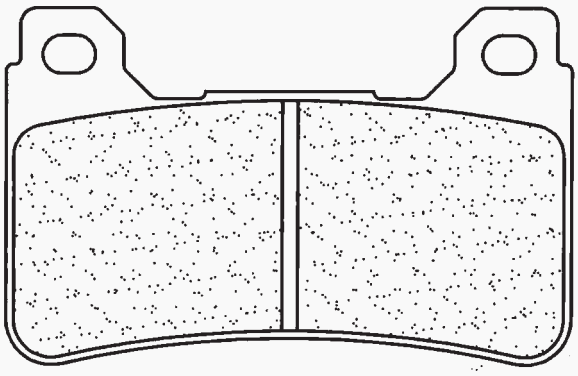

HONDA

CBR	600 RR (Rad.cal)	05 - 06	2	●	
CBR	600 RR (Rad.cal)	07 -	2	●	
CBR	600 RR (Rad.cal) - ABS	09 -	2	●	
VFR	800 F (ABS)	14 -	2	●	
VFR	800 FAE	14	2	●	
VFR	800 X Crossrunner	15 -	2	●	
CB	1000 R (Rad.cal)	08 -	2	●	
CBR	1000 RR (Rad.cal)	06 - 07	2	●	
CBR	1000 RR Fireblade (Rad.cal)	04 - 05	2	●	
CBR	1000 RR Fireblade (Rad.cal)	08 - 13	2	●	
CBR	1000 RR Fireblade (Rad.cal) (C-ABS)	09 - 13	2	●	
CBR	1000 RR Fireblade (Rad.cal) (C-ABS)	14 - 16	2	●	

Dim. / Size

74.4 mm
47 mm
7.9 mm

1134

Street	Sport	Racing	Enduro	MX	Off-road Racing	ATV

A3+ XBK5

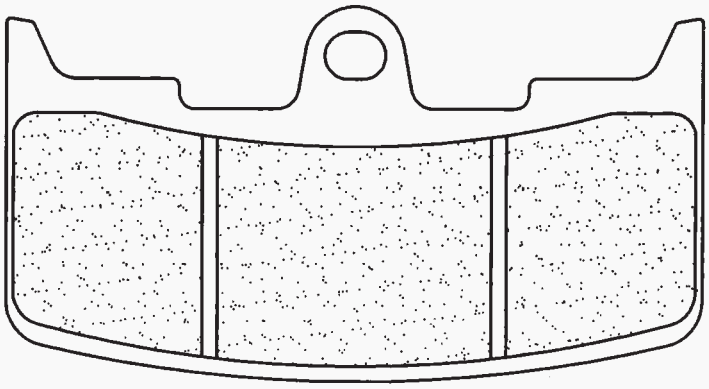

BUELL

XB-9R	984 Firebolt	02 -	1	●
XB-9S	984 Lightning	03 -	1	●
XB-9SX	984 Lightning City X	04 -	1	●
XB-12R	1200 Firebolt	04 - 08	1	●
XB-12S	1200 Lightning	04 - 08	1	●
XB-12Scg	1200 Lightning	06 - 08	1	●
XB-12Ss	1200 Lightning Long	06 - 08	1	●
XB-12STT	1200 Supet TT	07 -	1	●
XB-12X	1200 Ulysses	06 -	1	●

Dim. / Size

91.8 mm
49.5 mm
8 mm

1139

Street	Sport	Racing	Enduro	MX	Off-road Racing	ATV

X59 ATV1

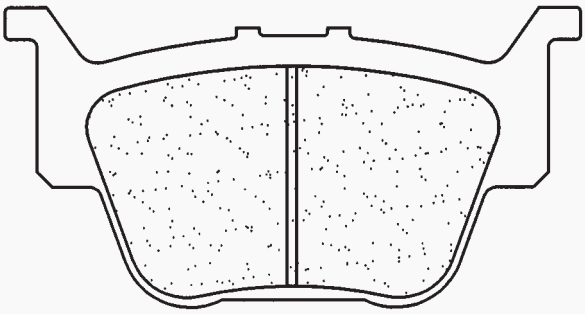

HONDA

TRX	420 FA / FPA	09 -		●
TRX	450 R	04 -		●
TRX	650 FA Rincon	03 - 05		●
TRX	650 FGA Rincon	04 - 05		●
TRX	680 FA6 Rincon	06 -		●
TRX	680 FGA6 Rincon	06 -		●

Dim. / Size

75.3 mm
39.5 mm
9.7 mm

1140

Street	Sport	Racing	Enduro	MX	Off-road Racing	ATV

ATV1

1141

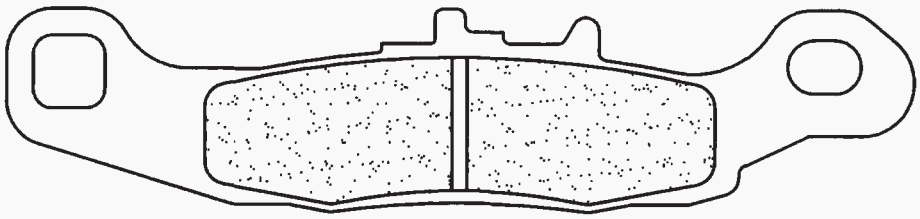

Dim. / Size

119.5 mm
26.5 mm
7.1 mm

1 - 2 = Nombre de jeux avant / Number of front sets / Anzahl Sets / Numero blister / Numero des juegos
L = Gauche / Left / Links / Sinistra / Izquierda - R = Droite / Right / Rechts / Destra / Derecha

Street | Sport | Racing | Enduro | MX | Off-road Racing | ATV

ATV1

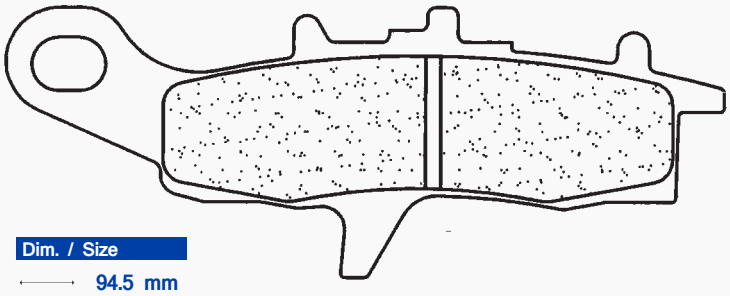

Dim. / Size
94.5 mm
35.5 mm
7.4 mm

1141 suite

KAWASAKI						
KFX	450		07 -	1	R	●
KVF	650	Brute Force 4X4 D/E	05 -	1	R	●
KVF	650	Prairie	01 - 03	1	R	●
KVF	700	Prairie	04 -	1	R	●
KFX	700	V-Force	04 -	1	R	●
KSV	700	V-Force A1	04 -	1	R	●
SUZUKI						
LT-V	700	Quadrunner Twin Peaks	04 - 05	1	R	●

1142

Street | Sport | Racing | Enduro | MX | Off-road Racing | ATV

ATV1

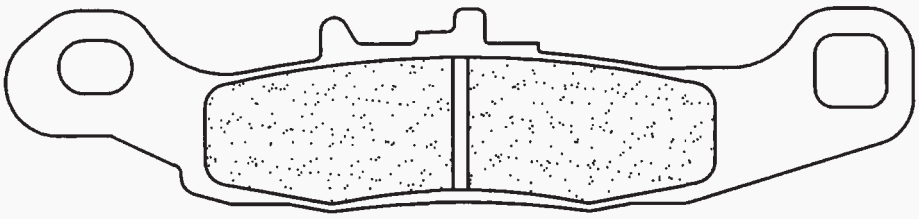

Dim. / Size
119.5 mm
26.5 mm
7.1 mm

KAWASAKI						
KFX	450		07 -	1	L	●
KVF	650	Brute Force 4X4 D/E	05 -	1	L	●
KVF	650	Prairie	01 - 03	1	L	●
KVF	700	Prairie	04 -	1	L	●
KFX	700	V-Force	04 -	1	L	●
KSV	700	V-Force A1	04 -	1	L	●
SUZUKI						
LT-V	700	Quadrunner Twin Peaks	04 - 05	1	L	●

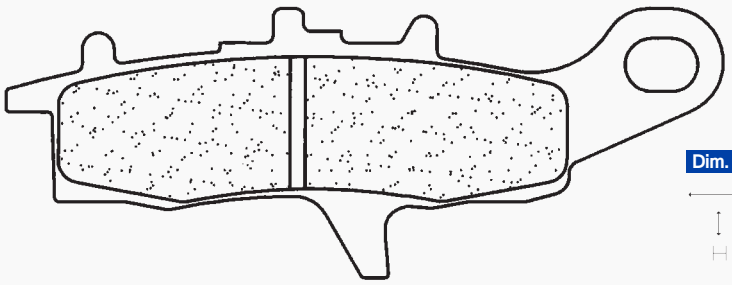

Dim. / Size
94.5 mm
35.5 mm
7.4 mm

1144

Street | Sport | Racing | Enduro | MX | Off-road Racing | ATV

S4

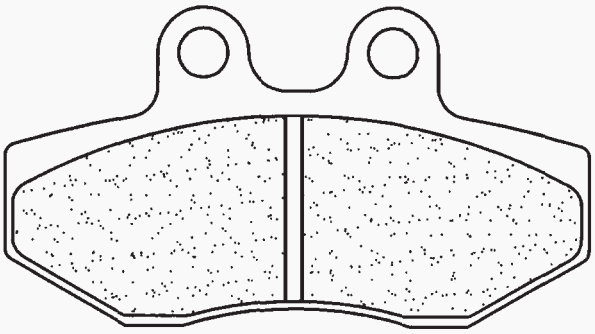

Dim. / Size
77 mm
42 mm
7.5 mm

AJP					
PR4	125	Supermotard	04 -	1	●
PR4	200	Supermotard	04 -	1	●
APRILIA					
	125	Classic	96 -	1	●
	125	Pegaso	90 - 91	1	●
	125	Red Rose	90 -	1	●
	125	Tuareg Rally	92	1	●
	125	Tuareg Wind	90 -	1	●
HRD					
	125	Supermotard	00 - 02	1	●
	125	Trail	00 - 02	1	●
RIEJU					
	125	MRX	02 - 08	1	●
	125	SMX	02 - 07	1	●
SACHS					
	125	Roadster	00 - 03	1	●
SHERCO					
	125	City Corp (All models)	03 - 07	1	●
SIMSON					
	125	SM	01 -	1	●

1 - 2 = Nombre de jeux avant / Number of front sets / Anzahl Sets / Numero blister / Numero des juegos
L = Gauche / Left / Links / Sinistra / Izquierda - R = Droite / Right / Rechts / Destra / Derecha

Street	Sport	Racing	Enduro	MX	Off-road Racing	ATV

RX3

1145

Dim. / Size

69.7 mm
46.3 mm
13 mm

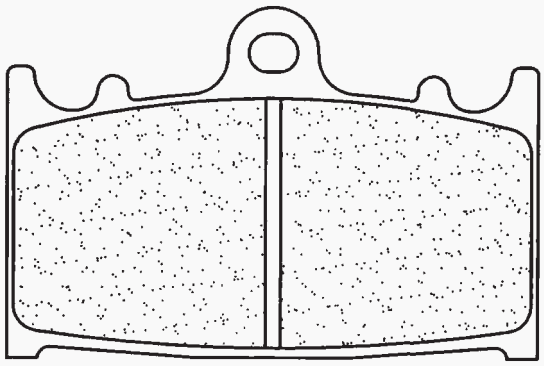

SUZUKI			
C	1500 Intruder	05 - 09	●
C90	1500 Boulevard	05 - 09	●
VL	1500 Intruder Legendary Classic	02 - 03	●

Street	Sport	Racing	Enduro	MX	Off-road Racing	ATV

S4 XBK5 EN10 MX10

1146

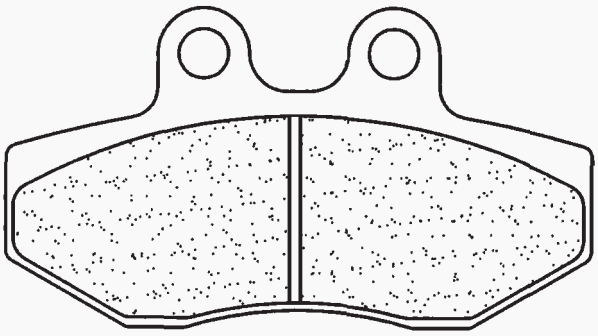

Dim. / Size

77 mm
42 mm
7.5 mm

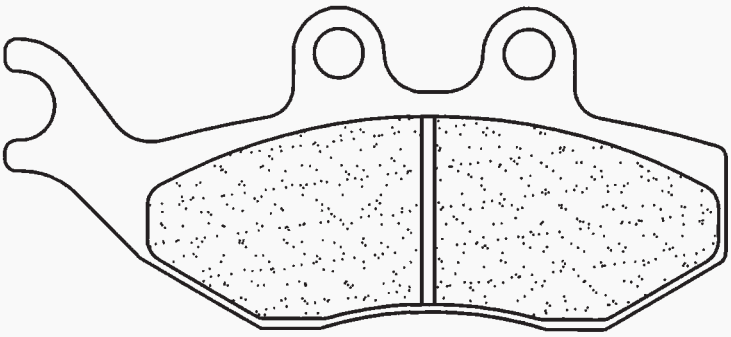

Dim. / Size

94.7 mm
42 mm
7.5 mm

AJP				
PR3	125	Enduro	08 -	1 ●
PR3	125	Supermotard	08 -	1 ●
PR3	200	Enduro	08 -	1 ●
PR3	200	Supermotard	08 -	1 ●
MX	200		09 -	1 ●
APRILIA				
	125	Pegaso	92 -	1 ●
RX	125		92 - 07	1 ●
BETA				
RR	50	Enduro	04 - 07	1 ●
	125	ALP (4T)	05 - 15	1 ●
ALP	125	(4T)	06 -	1 ●
RR	125	Enduro	06 -	1 ●
	125	M4	06 -	1 ●
RR	125	Motard (4T) (A/C - spoke wheels)	08 - 14	1 ●
RR	125	Motard (4T) (A/C - spoke wheels)	11 - 14	1 ●
	125	Urban	08 - 15	1 ●
	125	Urban Special	09 - 15	1 ●
ALP	350	4.0	04 - 05	1 ●
ALP	350	4.0	06 -	1 ●
	200	ALP (4T)	05 - 12	1 ●
	200	Urban	08 - 15	1 ●
	350	ALP (4T)	05 - 12	1 ●
DERBI				
	125	Mulhacén	07	1 ●
	125	Senda R (4T)	04 -	1 ●
	125	Senda X-Treme SM (4T)	04 -	1 ●
FANTIC				
	125	Caballero Motard Aircooled	10 -	1 ●
	125	Regolarna Casa	08 -	1 ●
	125	Supersei Motard	08 -	1 ●
GAS GAS				
	125	Pampera	04 -	1 ●
	250	Pampera	03 -	1 ●
	280	Pampera	04 -	1 ●
HM				
CRE	125	F / X	09	1 ●
KEEWAY				
	125	Enduro	07 -	1 ●
	125	X-Ray	07 -	1 ●
SHERCO				
	125	City Corp (All models)	08 -	1 ●
	125	SE 1.25 F Enduro (4T)	10 -	1 ●
	125	SM 1.25i F Black Panther (4T)	10 -	1 ●
YAMAHA				
TZR	50		03 - 08	1 ●
XT	125	X Supermotard	05 -	1 ●

1 - 2 = Nombre de jeux avant / Number of front sets / Anzahl Sets / Numero blister / Numero des juegos
L = Gauche / Left / Links / Sinistra / Izquierda - R = Droite / Right / Rechts / Destra / Derecha

Street	Sport	Racing	Enduro	MX	Off-road Racing	ATV
RX3					X59	ATV1

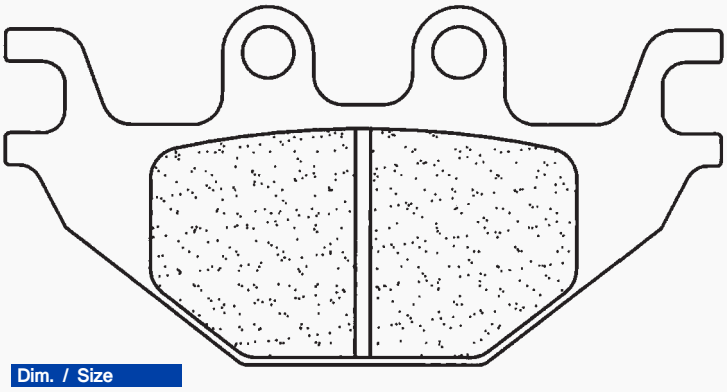

Dim. / Size
94 mm
47 mm
8.8 mm

1147

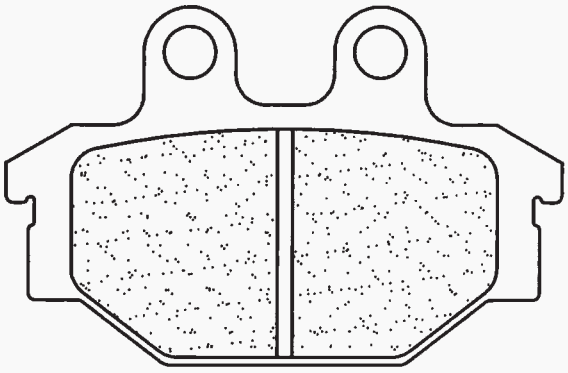

Dim. / Size
73.2 mm
47 mm
10.8 mm

ADLY					
	300 Cross X Over	07 -	2	●	
	300 Cross X road	07 -	2	●	
	300 Sport	07 -	2	●	
	320 S	07 -	2	●	
	320 U	07 -	2	●	
ARCTIC CAT					
	300 2x4 (Mid size)	10 -	2	●	●
BOMBARDIER					
	250 DS	06 -	2	●	●
CAN-AM					
	250 DS	07 -	2	●	●
CPI					
	250 XS	07 -	2	●	
HERCULES					
	280 ATV	07 -	2	●	
	300 ATV	07 -	2	●	
INDIAN					
	1133 Scout	14 -			●
	1133 Scout Bobber	17 -			●
KAWASAKI					
	300 Brute Force	13 -			●
KYMCO					
	250 KXR	04 - 07	2	●	
	250 MXu	04 - 09	2	●	
	250 Urban Quad	06 -	2	●	
	300 Maxxer	06 - 13	2	●	
	300 MXu	06 -	2	●	●
	500 MXu	05 - 09	2	●	●
	500 UXV 4x4	08 -	2	●	●
SYM					
	200 Quadlander	05 - 09	2	●	
	200 Trackrunner	05 - 09	2	●	
	250 Quadlander	05 - 09	2	●	
	300 Citymax	06 -	2	●	
	300 Outlander / S	07 -	2	●	●
	300 Quadlander	06 -	2	●	●
	600 Quadraider	06 - 07			●
	600 Quadraider	08 - 09	2	●	●
	600 Quadraider LE	10 -	2	●	●
TGB					
	400 Avenger 4x2 / LE	07 - 09	2	●	●
	425 Blade 4x4	07 - 09	2	●	●
	425 Blade 4x4 SE	09 -	2	●	●
	500 Avenger 4x2 R	07 - 09	2	●	●
	525 Blade 4x4 SE	09 -	2	●	●
	525 Blade 4x4 SL	09 -	2	●	
	525 SE 4x4	09 -	2	●	
	550 Blade 4x4 SE / SL	09 -	2	●	
YAMAHA					
MT	125	15 -			●
YZF	125 R	08 - 13			●
YZF	125 R	14 -			●

Street	Sport	Racing	Enduro	MX	Off-road Racing	ATV
A3+	XBK5					

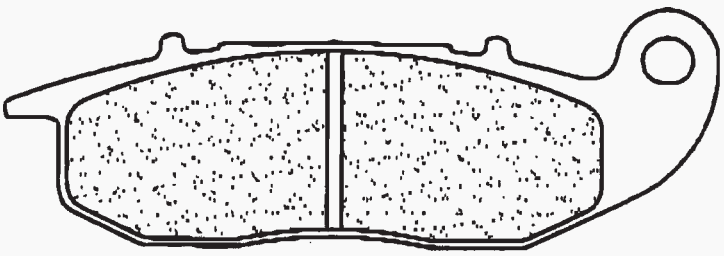

Dim. / Size
98.6 mm
33 mm
7.6 mm

HONDA					
CBF	125	09 -	1	●	
CBR	125 R	04 - 10	1	●	
CBR	125 R	11 -	1	●	
CBR	150 R	00 -	1	●	
RIEJU					
	125 NKD	08 - 10	1	●	
	125 RS2 (J.Juan caliper)	07 - 10	1	●	
	125 RS2 Pro (J.Juan caliper)	07 - 10	1	●	

1148

Dim. / Size
111 mm
36.2 mm
7.6 mm

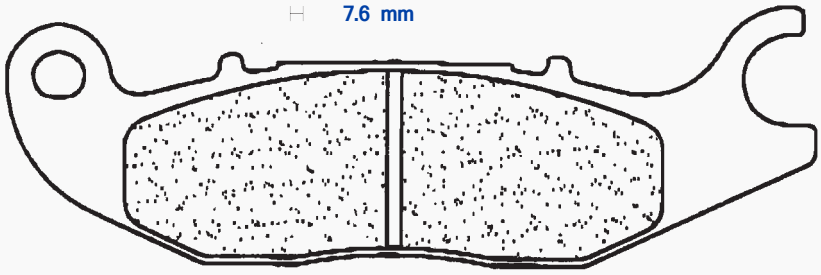

1 - 2 = Nombre de jeux avant / Number of front sets / Anzahl Sets / Numero blister / Numero des juegos
L = Gauche / Left / Links / Sinistra / Izquierda - R = Droite / Right / Rechts / Destra / Derecha

Street	Sport	Racing	Enduro	MX	Off-road Racing	ATV

A3+

1149

Dim. / Size
102 mm
45.9 mm
10 mm

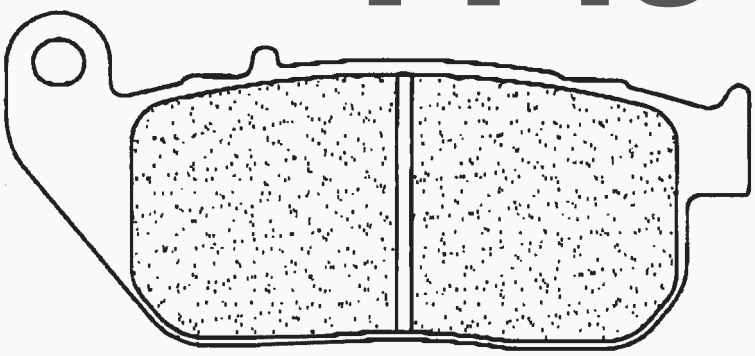

HARLEY DAVIDSON				
XL	883 C Sportster Custom	04 - 08	1	●
XL	883 L 883 Low	04 - 10	1	●
XL	883 L Superlow	11 - 13	1	●
XL	883 N Iron	09 - 13	1	●
XL	883 R Roadster	10	2	●
XL	883 R Sportster R	05 - 13	2	●
XL	1200 N Nightster	08 - 12	1	●
XL	1200 Sportster C Custom	04 - 13	1	●
XL	1200 Sportster L Low	07 - 11	1	●
XL	1200 Sportster R Roadster	04 - 08	2	●
XL	1200 V - Seventy Two	10 - 13	1	●
XL	1200 X - Forty Eight	10 - 13	1	●

Street	Sport	Racing	Enduro	MX	Off-road Racing	ATV

RX3

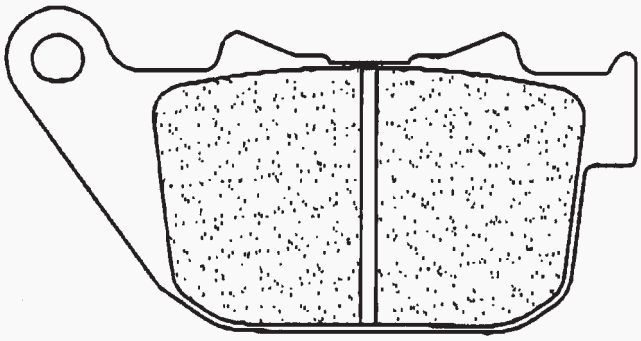

HARLEY DAVIDSON			
XL	883 C Sportster Custom	04 - 08	●
XL	883 L 883 Low	04 - 10	●
XL	883 L Superlow	11 - 13	●
XL	883 N Iron	09 - 13	●
XL	883 R Roadster	10	●
XL	883 R Sportster R	05 - 13	●
XL	1200 N Nightster	08 - 12	●
XL	1200 Sportster C Custom	04 - 13	●
XL	1200 Sportster L Low	07 - 11	●
XL	1200 Sportster R Roadster	04 - 08	●
XL	1200 V - Seventy Two	10 - 13	●
XR	1200 X	10 - 12	●
XL	1200 X - Forty Eight	10 - 13	●
XR	1200	08 - 10	●

Dim. / Size
86 mm
44.5 mm
10.4 mm

1150

Street	Sport	Racing	Enduro	MX	Off-road Racing	ATV

X59 ATV1

1151

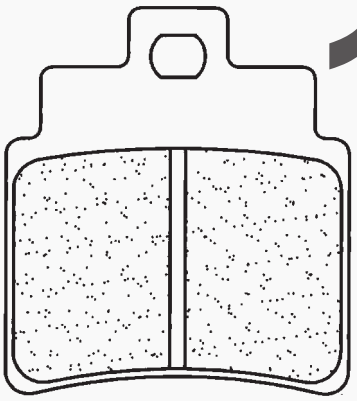

ARCTIC CAT			
	300 DVX	09 -	●
GILERA			
	250 Oregon Quad	07 -	●
KYMCO			
	250 KXR	04 - 07	●
	250 MXu	04 - 09	●
	250 Urban Quad	06 -	●
	300 Maxxer	06 - 13	●

Dim. / Size
45 mm
50.8 mm
7 mm

Street	Sport	Racing	Enduro	MX	Off-road Racing	ATV

X59

SUZUKI			
RM	85 / L	05 - 10	●

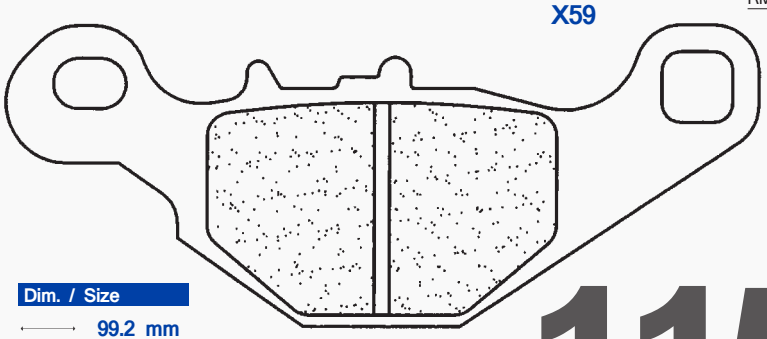

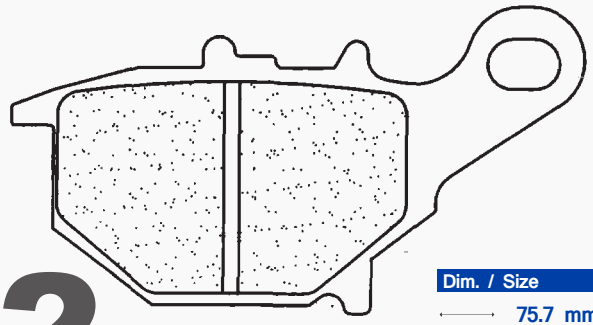

1152

Dim. / Size
99.2 mm
39.7 mm
7.6 mm

Dim. / Size
75.7 mm
40.6 mm
8.4 mm

1 - 2 = Nombre de jeux avant / Number of front sets / Anzahl Sets / Numero blister / Numero des juegos
L = Gauche / Left / Links / Sinistra / Izquierda - R = Droite / Right / Rechts / Destra / Derecha

Street	Sport	Racing	Enduro	MX	Off-road Racing	ATV
	XBK5	C60				

1157

Dim. / Size

69.6 mm
52 mm
8 mm

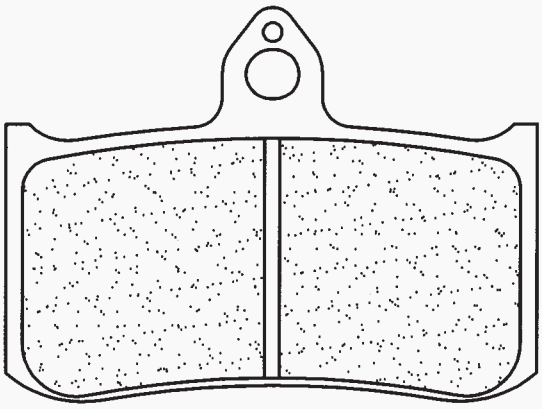

HONDA					
RS	125 R	95 -	1	●	
RS	250 R	93 -	2	●	

Street	Sport	Racing	Enduro	MX	Off-road Racing	ATV
A3+	RX3	XBK5				

1159

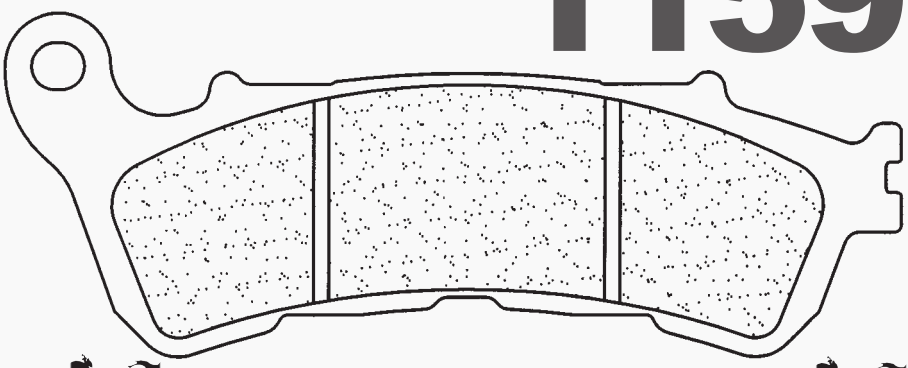

Dim. / Size

117.9 mm
45.4 mm
9 mm

HARLEY DAVIDSON					
XL	883 L Superlow	14 -	1	●	
XL	883 N Iron	14 -	1	●	
XL	883 R Roadster	14 -	1	●	
XL	1200 C / CA / CB / CP Custom	14 -	1	●	
XL	1200 Superlow T	15 -	1	●	
XL	1200 V - Seventy Two	14 -	1	●	
XL	1200 X - Forty Eight	14 -	1	●	
XL	1200 CX - Roadster	16 -	2	●	
HONDA					
CBR	250 R ABS	11 -	1	●	
CBF	500 ABS	04 -	1	●	
CBR	600 F ABS	11 -	2	●	
CB	600 Hornet ABS	07 -	2	●	
CBF	600 N / S - ABS	08 -	2	●	
DN-01	680	08 -	2	●	
NT	700 Deauville / ABS	06 -	2	●	
NC	700 S (Auto gearbox)	12 -	1	●	
NC	700 S (Manual gearbox)	12 -	1	●	
XL	700 Transalp ABS	08 -	2	●	
NC	700 X (Auto gearbox)	12 -	1	●	

HONDA					
NC	700 X (Manual gearbox)	12 -	1	●	
VFR	800 VTEC / VTEC ABS	06 - 13	2	●	
VFR	800 X Crossrunner	11 - 14	2	●	
CBF	1000 ABS	06 - 09	2	●	●
CBF	1000 ABS	10 -	2	●	●
CB	1000 R (Rad.cal) ABS	08 -	2	●	
XL	1000 Varadero	07 -	2	●	
XL	1000 Varadero ABS	04 -	2	●	
XL	1000 Varadero Travel ABS	05 -	2	●	
VFR	1200 XAC/XAD/XAE Crosstourer (Manual)	12 - 14	2	●	
VFR	1200 XDC/XDE - DCT Crosstourer (Auto)	12 - 14	2	●	
VFR	1200 XDC - DCT Crosstourer Highlander (Auto)	13 - 14	2	●	
ST	1300 Pan European ABS	08 -	2	●	
CTX	1300	14 -	2	●	
GL	1800 F6C Valkyrie	14 -	2	●	
GL	1800 Goldwing 12 YM	12 -	2	●	●
GL	1800 Goldwing F6B	13 -	2	●	
SUZUKI					
C	1800 R Intruder / RT Intruder	08 -	2	●	

Street	Sport	Racing	Enduro	MX	Off-road Racing	ATV
	RX3					

1163

Dim. / Size

89.2 mm
40.6 mm
9.8 mm

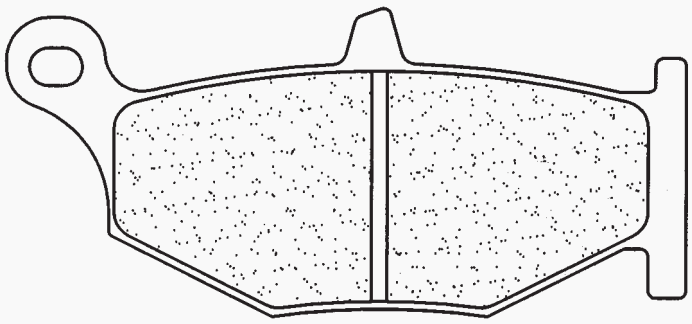

SUZUKI			
GSR	400 K6	06 -	●
GSX-R	600 K6 / K7 (Rad.cal)	06 - 07	●
GSR	600 K6 / K7 / K8	06 -	●
GSX-R	600 K8 / K9 / L0 (Rad.cal)	08 - 10	●
GSX-R	750 K6 / K7 (Rad.cal)	06 - 07	●
GSX-R	750 K8 / K9 / L0 (Rad.cal)	08 - 10	●
GSX-R	1000 K7 / K8 (Rad.cal)	07 - 08	●
DL	1000 V-Strom ABS	14 -	●
GSX-R	1300 Hayabusa	08 - 12	●
GSX-R	1300 Hayabusa	13 -	●
GSX	1340 B-King	08 - 12	●

1 - 2 = Nombre de jeux avant / Number of front sets / Anzahl Sets / Numero blister / Numero des juegos
L = Gauche / Left / Links / Sinistra / Izquierda - R = Droite / Right / Rechts / Destra / Derecha

Street	Sport	Racing	Enduro	MX	Off-road Racing	ATV

X59 ATV1

1164

HONDA						
ATC	250	R	85 - 86	1	●	●
TRX	250	R Fourtrax	86 - 89			●
ATC	250	X	85	1	●	
TRX	250	X Fourtrax	87			●
ATC	300	X	85	1	●	
YAMAHA						
YFZ	450	RY / RZ	09 -	1 L		●
YFZ	450	V / W / X	06 - 08	1 L		●

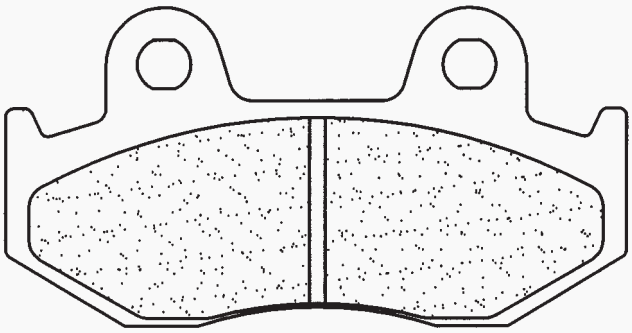

Dim. / Size

81.1 mm
42 mm
9.2 mm

Street	Sport	Racing	Enduro	MX	Off-road Racing	ATV

X59 ATV1

1165

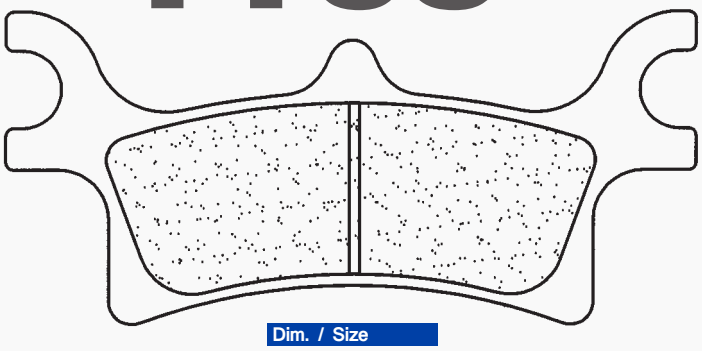

Dim. / Size

90.3 mm
41.2 mm
8.2 mm

POLARIS				
	325	Xpedition	02 -	●
	330	ATP	06 -	●
	330	E Trail Blazer	08 -	●
	330	Magnum 2x4 / 4x4	03 - 06	●
	450	Sportsman	06 -	●
	500	E Scrambler 2x4 / 4x4	08 -	●
	500	Magnum 2X4 / 4x4 HDS	02 - 03	●
	500	Predator E	06 -	●
	500	Ranger 6x6	00 - 02	●
	500	Scrambler 2x4	07 - 08	●
	500	Scrambler 4x4	05 - 10	●
	500	Sportsman 6x6	00 - 08	●
	500	Sportsman Efi / HO	03 - 08	●
	500	Sportsman Efi Quad	08 - 10	●
	500	Sportsman X2	06 - 08	●
	600	Sportsman 4x4	03 - 05	●
	700	Sportsman 4x4	02 - 06	●
	700	Sportsman Efi	07 -	●
	700	Sportsman MV 700	05 - 06	●
	800	Sportsman Efi	05 - 07	●
	800	Sportsman Efi Int/HO	07 - 10	●

Street	Sport	Racing	Enduro	MX	Off-road Racing	ATV

RX3

1167

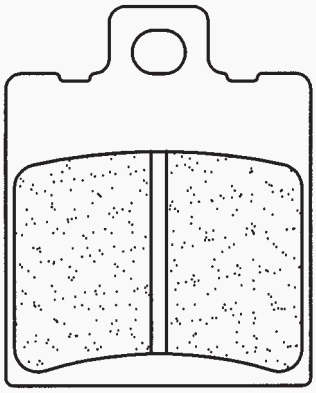

Dim. / Size

39.7 mm
50 mm
7 mm

APRILIA				
RS	125	/ Extrema / Replica	93 - 98	●
RS	125		99 - 05	●
RS	125	R Piste	04 - 05	●
BENELLI				
666	125	Born in hell	98 -	●

1 - 2 = Nombre de jeux avant / Number of front sets / Anzahl Sets / Numero blister / Numero des juegos
L = Gauche / Left / Links / Sinistra / Izquierda - R = Droite / Right / Rechts / Destra / Derecha

Street	Sport	Racing	Enduro	MX	Off-road Racing	ATV

X59 ATV1

1171

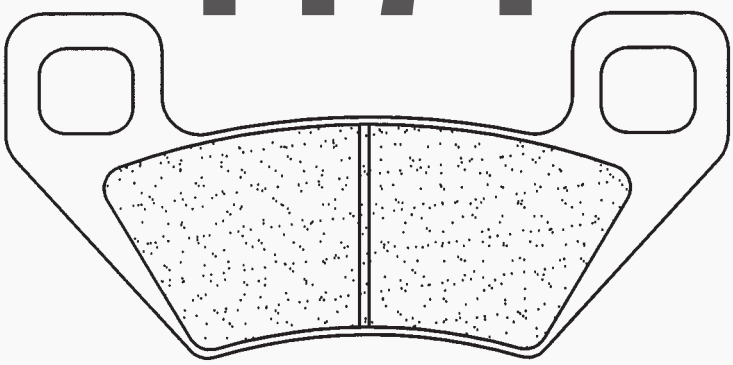

Dim. / Size

94.5 mm
45.5 mm
7 mm

ARCTIC CAT				
250 2x4	05 - 2	●	●	
300 4x4	05 - 2	●	●	
300 ATV	10 - 12 2	●	●	
300 DVX	09 - 2	●		
350 ATV	12 2	●	●	
366 4x4 / SE	08 - 10 2	●	●	
400 2x4 / 4x4 (FIS)	05 - 2	●	●	
400 ATV (Mid size)	13 - 2	●	●	
400 TRV	07 - 2	●	●	
425	12 - 2	●	●	
450	11 - 2	●	●	
500 2x4 / 4x4 (FIS)	05 - 2	●	●	
500 ATV (Mid size) / XT	13 - 2	●	●	
500 ATV Hi Efi / LE	09 - 10 2	●	●	
500 TBX 4x4	05 - 2	●	●	
500 TRV 4x4	05 - 2	●	●	
550	09 - 2	●	●	
650 H1	10 2	●	●	
650 H1 4x4 Aut.	05 - 2	●	●	
650 H1 TBX 4x4 Aut. / TRV	07 2	●	●	
650 V2 4x4 Aut LE	05 - 2	●	●	
650 V2 4x4 Aut.	05 - 2	●	●	
700 TRV	09 - 2	●	●	
1000 TRV	09 - 2	●	●	
1000 TRV Thunder Cat	09 - 2	●	●	
KYMCO				
400 Maxxer	09 - 2	●	●	
400 MXu	08 - 2	●	●	
450 Maxxer	10 - 2	●	●	
POLARIS				
300 Hawkeye	06 - 2	●	●	

Street	Sport	Racing	Enduro	MX	Off-road Racing	ATV

A3+ RX3

1172

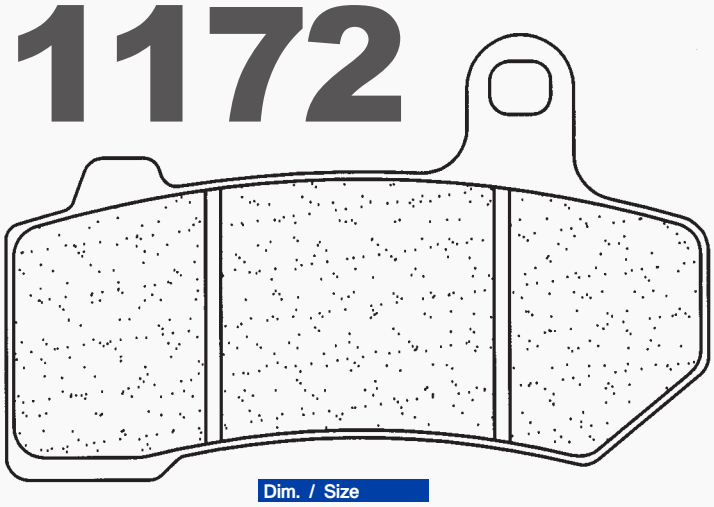

Dim. / Size

91.9 mm
58.5 mm
7 mm

HARLEY DAVIDSON				
VRSCF 1130 Muscle V-Rod	09 - 2	●	●	
VRSCD 1130 Night Rod	06 - 2	●	●	
VRSCDX 1130 Night Rod Special	06 - 2	●	●	
VRSCR 1130 Street Rod	06 - 2	●	●	
VRSCA 1130 V-Rod	06 - 2	●	●	
VRSCAW 1130 V-Rod	08 - 2	●	●	
VRSCX 1130 V-Rod	08 - 2	●	●	
VRSCDX 1250 Night Rod Special	13 - 2	●	●	
FLHTC 1584 Electra Glide Classic	08 - 2	●	●	
FLHT 1584 Electra Glide Standard	08 - 2	●	●	
FLTR 1584 Road Glide	08 - 2	●	●	
FLHR 1584 Road King	08 - 2	●	●	
FLHRC 1584 Road King Classic	08 - 2	●	●	
FLHX 1584 Street Glide	08 - 2	●	●	
FLHTCI 1584 Ultra Electra Glide Classic	08 - 2	●	●	
FLHTCUL 1690 Electra Glide Ultra Classic Low	15 - 2	●	●	
FLTRX 1690 Road Glide	15 - 2	●	●	
FLTRXS 1690 Road Glide Special	15 - 2	●	●	
FLHR 1690 Road King	11 - 2	●	●	
FLHX 1690 Street Glide	11 - 2	●	●	
FLHXS 1690 Street Glide Special	14 - 2	●	●	
FLHXXX 1690 Street Glide Trike	10 - 2	●		
FLHTCUTG 1690 Tri Glide Ultra Classic Trike	09 - 13 2	●		
FLHTCU 1690 Ultra Classic Electra Glide	11 - 2	●	●	
FLHTK 1690 Ultra Classic Electra Glide	10 - 2	●	●	
FLHTKL 1690 Ultra Limited Low	15 - 2	●	●	
FLHTKSE 1802 CVO Limited	14 - 2	●	●	
FLTRUSE 1802 CVO Road Glide Ultra	11 - 1	●	●	
FLHRSE5 1802 CVO Road King	14 - 2	●	●	
FLSTNSE 1802 CVO Softail Deluxe	14 - 2	●	●	
FLHXSE 1802 CVO Street Glide	10 - 2	●	●	

Street	Sport	Racing	Enduro	MX	Off-road Racing	ATV

RX3

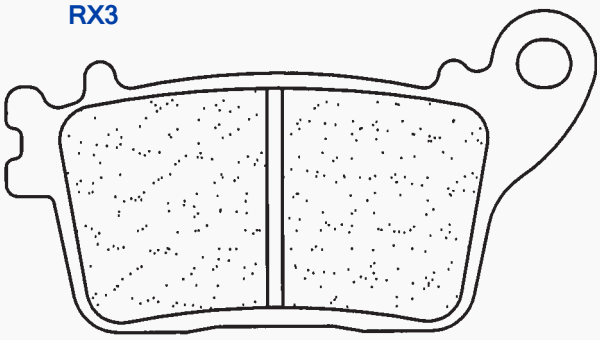

Dim. / Size

77.5 mm
42.3 mm
10.4 mm

1174

HONDA		
CBR 600 F	11 -	●
CB 600 Hornet	07 -	●
CBR 600 RR (Rad.cal)	07 -	●
CBR 600 RR (Rad.cal) - ABS	09 -	●
CBR 1000 RR (Rad.cal)	06 - 07	●
CBR 1000 RR Fireblade (Rad.cal)	08 - 13	●
CBR 1000 RR Fireblade (Rad.cal) (C-ABS)	09 - 13	●
CBR 1000 RR Fireblade (Rad.cal) (C-ABS)	14 - 16	●

1 - 2 = Nombre de jeux avant / Number of front sets / Anzahl Sets / Numero blister / Numero des juegos
L = Gauche / Left / Links / Sinistra / Izquierda - R = Droite / Right / Rechts / Destra / Derecha

Street	Sport	Racing	Enduro	MX	Off-road Racing	ATV

RX3

1174 suite

HONDA			
CBR	1000 RR SP (Brembo)	14 - 16	●
KAWASAKI			
ZX6-R	636 Ninja (ABS)	13 - 18	●
KAWASAKI			
ZX6-R	636 Ninja (N ABS)	13 - 18	●
ZX6-R	636 30th Anniversary (ABS)	15	●
ZX6-R	636 30th Anniversary (N ABS)	15	●
ZX10-R	1000 Ninja (Rad.cal)	11 - 13	●
SUZUKI			
GSX-R	600 Brembo (Rad.cal)	11 - 17	●
GSX-R	750 Brembo (Rad.cal)	11 - 17	●
GSX-R	1000 K9 / L0 (Rad.cal)	09 -	●
GSX-R	1000 L2 (Brembo Rad.cal)	12 - 17	●
GSX-S	1000 / F	15 -	●
GSX-R	1000 R / R Origins	18 -	●
YAMAHA			
MT-10	1000 / SP	16 -	●
YZF	1000 R1 / R1 M	15 -	●

Street	Sport	Racing	Enduro	MX	Off-road Racing	ATV

A3+ XBK5

1175

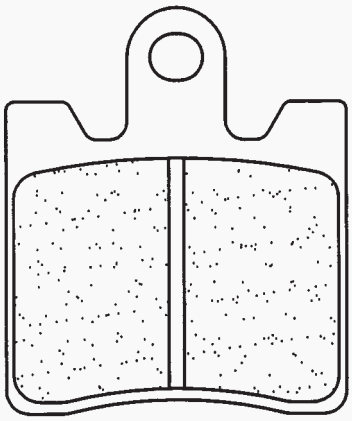

TRIUMPH				
	1215 Trophy	12 - 13	2	●
	1215 Trophy SE	12 - 14	2	●
YAMAHA				
FJR	1300 A / AS (ABS)	06 -	2	●
FJR	1300 AE	14 -	2	●
XV	1900 A Midnight Star / CFD	13 - 14	2	●

Dim. / Size

44.8 mm
53.6 mm
8.7 mm

Street	Sport	Racing	Enduro	MX	Off-road Racing	ATV

A3+ XBK5 C60

1177

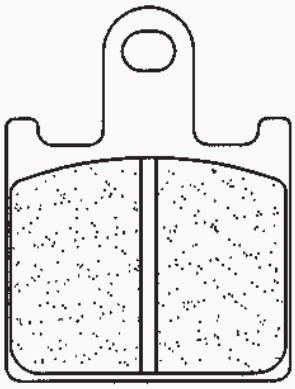

KAWASAKI				
ZX6-R	600 Ninja (Rad.cal)	07 -	2	●
Z	750 R	11 -	2	●
Z	1000	07 - 09	2	●
GTR	1400 (Rad.cal)	07 - 09	2	●
ZZR	1400 (Rad.cal)	06 - 11	2	●
SUZUKI				
GSX	1300 B-King	07	2	●

Dim. / Size

37.7 mm
49.9 mm
7.8 mm

Street	Sport	Racing	Enduro	MX	Off-road Racing	ATV

A3+ XBK5 C60

1180

YAMAHA				
YZF	1000 R1 (Rad.cal)	07 - 08	2	●
YZF	1000 R1 (Rad.cal)	09 - 14	2	●
MT-01	1700 (6 piston caliper)	07 - 09	2	●
MT-01	1700 S (6 piston caliper)	09	2	●
XV	1700 Y V-Max	09 -	2	●

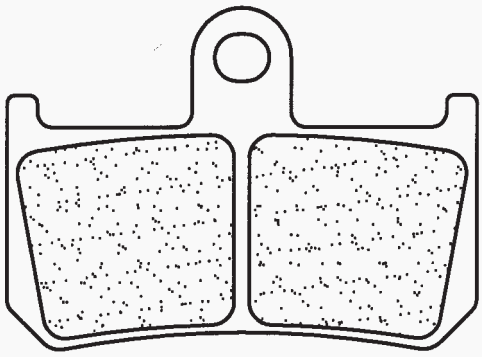

Dim. / Size

61.9 mm
44.8 mm
8.5 mm

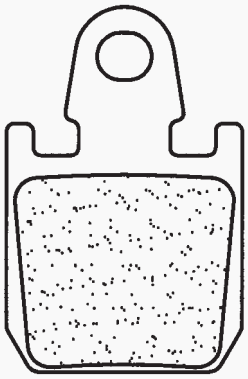

Emballé par 4
Pour 1 étrier
Packed by 4
For 1 caliper

Dim. / Size

30.9 mm
48 mm
8.5 mm

1 - 2 = Nombre de jeux avant / Number of front sets / Anzahl Sets / Numero blister / Numero des juegos
L = Gauche / Left / Links / Sinistra / Izquierda - R = Droite / Right / Rechts / Destra / Derecha

Street	Sport	Racing	Enduro	MX	Off-road Racing	ATV

MX10

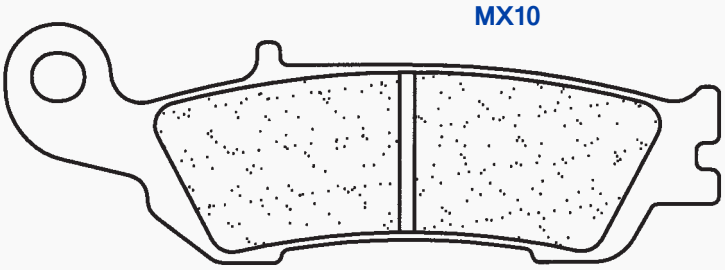

Dim. / Size
94 mm
31.5 mm
7 mm

1183

YAMAHA				
YZ	125 X / Y / Z	08 -	1	●
WR	250 F	16 -	1	●
YZ	250 FW/FX/FY/FZ/FA/FB/FD/FE (4T)	07 -	1	●
YZ	250 X / Y / Z (2T)	08 -	1	●
YZ	450 FX / FY / FZ (4T)	08 -	1	●

Street	Sport	Racing	Enduro	MX	Off-road Racing	ATV

ATV1

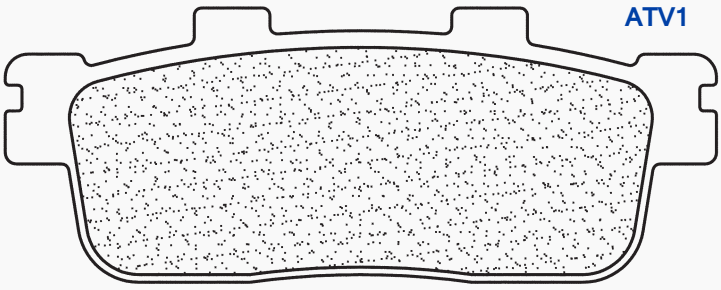

Dim. / Size
93.9 mm
36.2 mm
10.2 mm

1184

DAELIM				
ET	250 Quad	05 - 08		●
ET	300 Quad	07 - 09		●
ST	250 Sector Quad	05 - 06		●

E-TON				
RXL	150 Vector	07		●
RXL	150 Viper	07 -		●
VXL	250 Vector, ST Vector	06 -		●
VXL	300 Vector, ST Vector	07 -		●
VTX	300 Vortex, ST Vortex	07 -		●
SYM				
	200 Quadlander	05 - 09		●
	200 Trackrunner	05 - 09		●
	250 Quadlander	05 - 09		●
	300 Citymax	06 -		●

Street	Sport	Racing	Enduro	MX	Off-road Racing	ATV

A3+ XBK5 C60

Dim. / Size
102 mm
42 mm
7.5 mm

1185

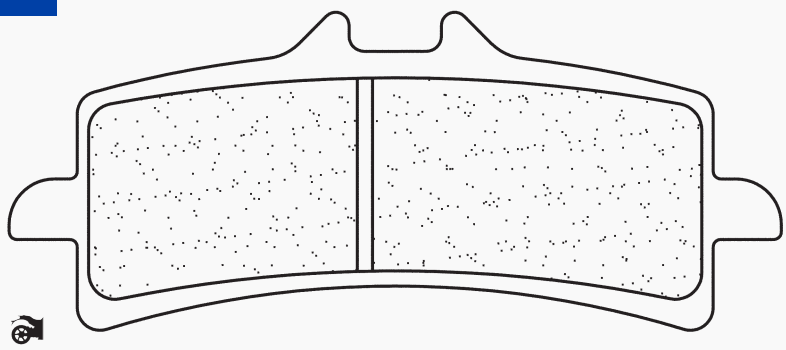

APRILIA				
RSV4	1000 Factory	09 - 10	2	●
RSV4	1000 Factory APRC	11 -	2	●
RSV4	1000 R	10	2	●
RSV4	1000 R APRC	11 -	2	●
RSV4	1000 RR	15 -	2	●
BIMOTA				
BB3	1000	14 -	2	●
3D	1078 Tesi	16 -	2	●
DB7	1098	09	2	●
DB8	1198 / SP	10 - 14	2	●
BMW				
HP2	1200 Sport	08 -	2	●
S	1000 RR HP4	12 -	2	●
S	1000 RR HP4 Race	18 -	2	●
DUCATI				
	848 Evo	10 -	2	●
	848 Evo Corse SE	12-	2	●
	848 Street Fighter Evo SP	12-	2	●
D16RR	990 Desmosedici RR	07	2	●
	1098 / S	07 - 08	2	●
	1098 R	08	2	●
	1098 R Bayliss LE	09	2	●
	1098 Streetfighter	09 -	2	●
	1098 Streetfighter S	09 -	2	●
	1100 Hypermotard Evo SP	10 -	2	●
	1100 Hypermotard S	07 -	2	●
	1103 Panigale V4 / S / Special	18 -	2	●
	1198 / S / R Corse	09 -	2	●
	1199 Panigale / S / R / Senna	12 - 14	2	●

DUCATI				
	1199 Superleggera	14	2	●
	1200 Diavel	11 -	2	●
	1200 Diavel Titanium (ABS)	15 -	2	●
	1200 Xdiavel / S	16 -	2	●
	1200 Monster R	15	2	●
	1200 Monster S	14 -	2	●
	1200 Multistrada S / S D-air	15 -	2	●
	1260 Multistrada S / S D-air / Pikes Peak	18 -	2	●
	1299 Panigale R FE	18 -	2	●
	1299 Panigale / S / R	15 -	2	●
HONDA				
CBR	1000 RR SP (Brembo)	14 - 16	2	●
HUSQVARNA				
FS	450	15 -	1	●
	900 Nuda R	11 -	2	●
KAWASAKI				
	1000 H2 Ninja / H2R Ninja	15 -	2	●
Z	1000 R Edition (Brembo)	18 -	2	●
ZZR	1400 Performance Sport	16	2	●
KTM				
SX	450 SMR	14 -	1	●
	690 Duke R	13 - 14	1	●
	690 SMR	07 - 09	2	●
	990 Supermoto R / SM-R	10 - 13	2	●
RC-8	1190	08 -	2	●
RC8	1190 R	09 -	2	●

1 - 2 = Nombre de jeux avant / Number of front sets / Anzahl Sets / Numero blister / Numero des juegos
L = Gauche / Left / Links / Sinistra / Izquierda - R = Droite / Right / Rechts / Destra / Derecha

1185 suite

Street	Sport	Racing	Enduro	MX	Off-road Racing	ATV
A3+	XBK5	C60				

KTM					
	1290 Super Duke R	14 -	2	●	
	1290 Super Duke GT	16 -	2	●	
MV AGUSTA					
	675 F3	15 -	2	●	
	675 F3 Oro	12 - 14	2	●	
	675 F3 RC	16 -	2	●	
	800 Dragster RC	17 -	2	●	
	800 F3	14 -	2	●	
	800 F3 RC	16 -	2	●	
	1000 F4	10 -	2	●	
	1000 F4 R Corsa Corta	12-	2	●	
	1000 F4 RR Corsa Corta	12-	2	●	
	1078 Brutale RR	08 - 09	2	●	
	1078 F4 RR 312 (Brembo)	08 -	2	●	
	1090 Brutale RR	10 -	2	●	
	1090 Brutale RR	12-	2	●	
	1090 Brutale RR Corsa	13 -	2	●	
SUZUKI					
GSX-R	600 Brembo (Rad.cal)	11 - 17	2	●	
GSX-R	750 Brembo (Rad.cal)	11 - 17	2	●	
GSX-S	1000 / F	15 -	2	●	
GSX-R	1000 L2 (Brembo Rad.cal)	12 - 17	2	●	
SUZUKI					
GSX-R	1000 R / R Origins	18 -	2	●	
GSX-R	1300 Hayabusa	13 -	2	●	
TRIUMPH					
	675 Daytona R (Brembo Rad.cal)	11 - 12	2	●	
	675 Daytona R (Brembo Rad.cal)	13 -	2	●	
	765 Street Triple RS	17 -	2	●	
	1050 Speed Triple R (Brembo Rad.cal)	12 - 15	2	●	
	1050 Speed Triple S	16 -	2	●	
	1050 Speed Triple R	16 -	2	●	

1187

Street	Sport	Racing	Enduro	MX	Off-road Racing	ATV
	XBK5	C60				

APRILIA					
RS	125	06 -	1	●	
SMV	750 Dorsoduro	08 - 17	2	●	
SL	750 Shiver	07 - 17	2	●	
SL	750 Shiver GT	09 - 17	2	●	
NA	850 Mana	07	2	●	
NA	850 Mana	08 - 17	2	●	
NA	850 Mana GT	09 - 17	2	●	
SL	900 Dorsoduro	18 -	2	●	
SL	900 Shiver	18 -	2	●	
YAMAHA					
YZF	125 R	14 -	1	●	
MT	125	15 -	1	●	

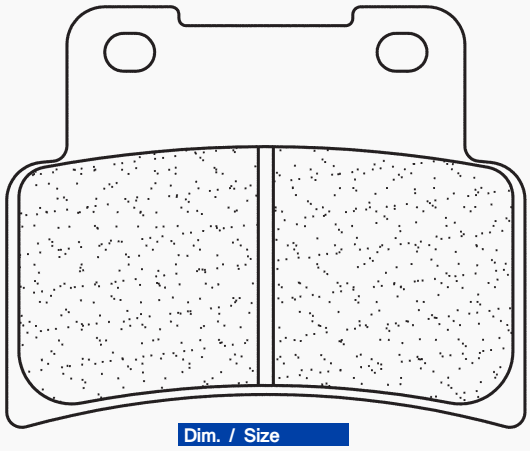

Dim. / Size

68.5 mm
55.5 mm
9 mm

1192

Street	Sport	Racing	Enduro	MX	Off-road Racing	ATV
						ATV1

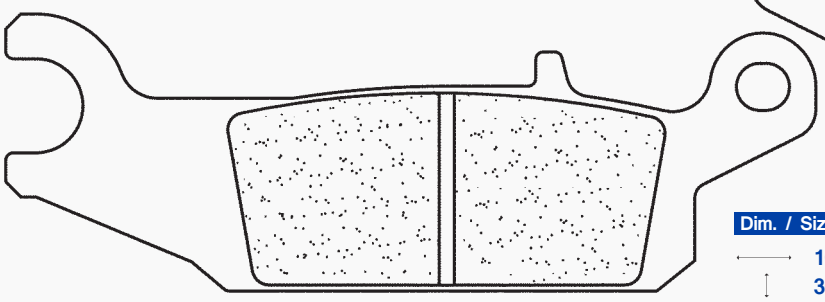

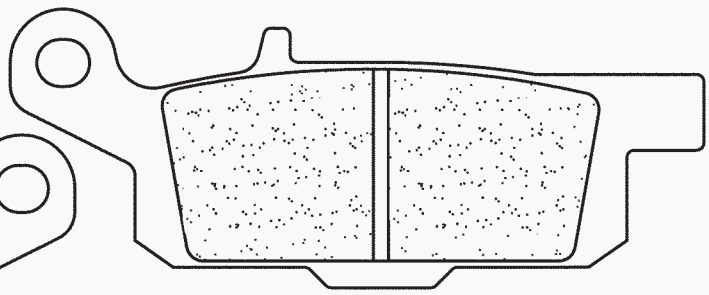

Dim. / Size

107 mm
36.5 mm
7.5 mm

Dim. / Size

91.7 mm
36.7 mm
7.5 mm

YAMAHA					
YFM	250 R Raptor	08 -	1 R	●	
YFM	550 Grizzly EPS	07 -	1 R	●	
YFM	700 Grizzly EPS	07 -	1 R	●	
YFM	700 Kodiak EPS	16 -	1 R	●	

1 - 2 = Nombre de jeux avant / Number of front sets / Anzahl Sets / Numero blister / Numero des juegos
L = Gauche / Left / Links / Sinistra / Izquierda - R = Droite / Right / Rechts / Destra / Derecha

Street	Sport	Racing	Enduro	MX	Off-road Racing	ATV

ATV1

1193

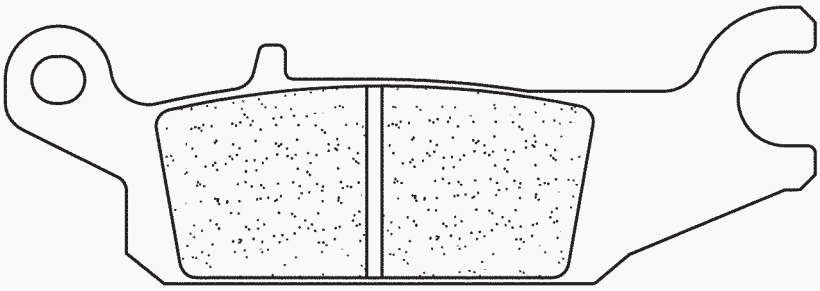

Dim. / Size
91.7 mm
36.7 mm
7.5 mm

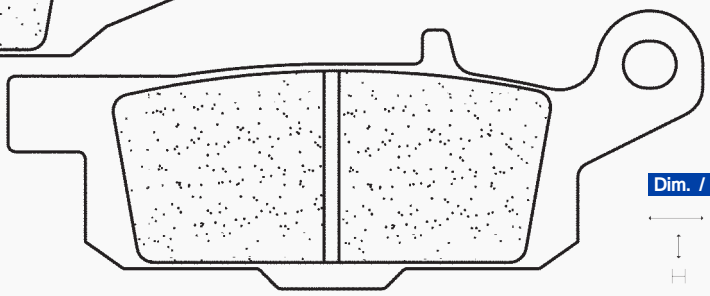

Dim. / Size
107 mm
36.5 mm
7.5 mm

YAMAHA					
YFM	250	R Raptor	08 -	1 L	●
YFM	550	Grizzly EPS	07 -	1 L	●
YFM	700	Grizzly EPS	07 -	1 L	●
YFM	700	Kodiak EPS	16 -	1 L	●

Street	Sport	Racing	Enduro	MX	Off-road Racing	ATV

ATV1

1194

Dim. / Size
107 mm
36.5 mm
8.9 mm

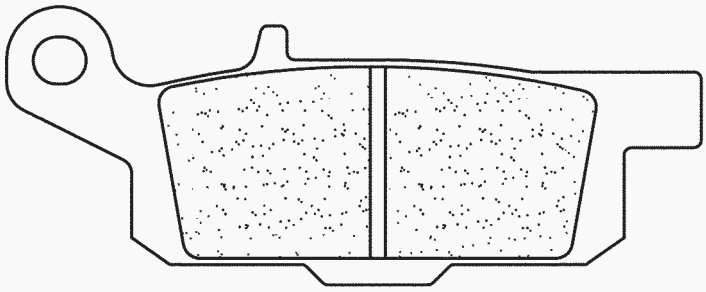

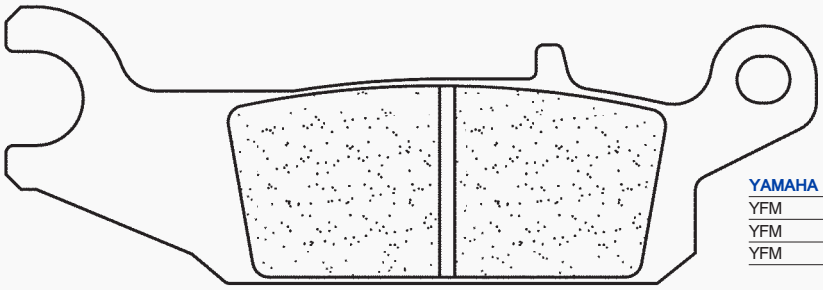

Dim. / Size
91.7 mm
36.7 mm
8.9 mm

YAMAHA					
YFM	550	Grizzly EPS	07 -	R	●
YFM	700	Grizzly EPS	07 -	R	●
YFM	700	Kodiak EPS	16 -	R	●

Street	Sport	Racing	Enduro	MX	Off-road Racing	ATV

ATV1

1195

Dim. / Size
107 mm
36.5 mm
8.9 mm

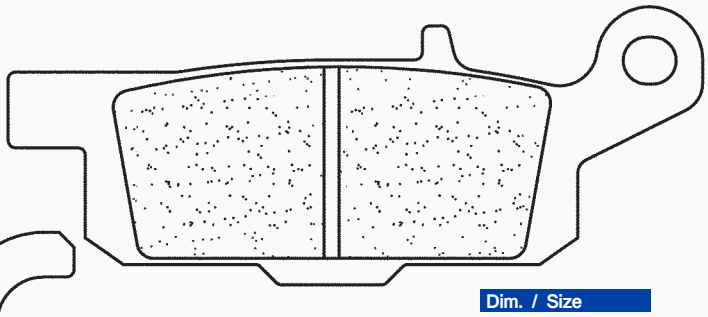

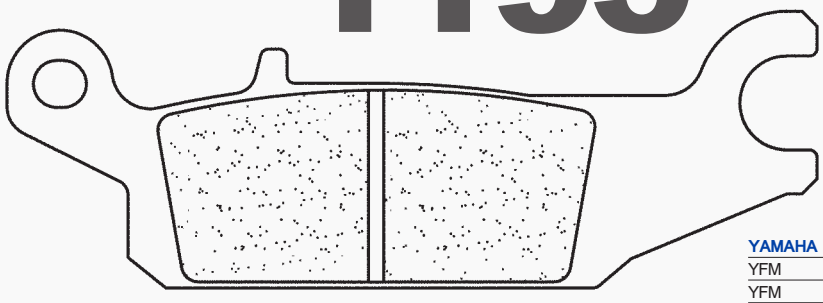

Dim. / Size
91.7 mm
36.7 mm
8.9 mm

YAMAHA					
YFM	550	Grizzly EPS	07 -	L	●
YFM	700	Grizzly EPS	07 -	L	●
YFM	700	Kodiak EPS	16 -	L	●

1 - 2 = Nombre de jeux avant / Number of front sets / Anzahl Sets / Numero blister / Numero des juegos
L = Gauche / Left / Links / Sinistra / Izquierda - R = Droite / Right / Rechts / Destra / Derecha

Street	Sport	Racing	Enduro	MX	Off-road Racing	ATV

RX3

1203

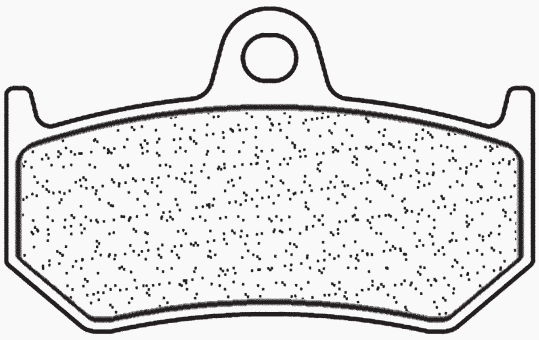

Dim. / Size

69.4 mm
42.5 mm
7.5 mm

MV AGUSTA

750	Brutale (All models) (Nissin)	03 - 08	●
750	F4 (All models) (Nissin)	99 - 03	●
800	Dragster RC	17 -	●
800	F3	14 -	●
910	Brutale R (Brembo)	05 - 08	●
800	F3 RC	16 -	●
910	Brutale S (Nissin)	05 - 08	●
920	Brutale	11 -	●
989	Brutale R	08 - 09	●
990	Brutale R	10 -	●
1000	F4 (All models) (Nissin)	04 - 06	●
1000	F4 R (Brembo)	06 - 07	●
1000	F4	10 -	●
1000	F4 R Corsa Corta	12 -	●
1000	F4 RR 312 (Brembo)	07	●
1000	F4 RR Corsa Corta	12 -	●
1000	F4 Senna	06	●
1078	Brutale RR	08 - 09	●
1078	F4 RR 312 (Brembo)	08 -	●
1090	Brutale R	12 -	●
1090	Brutale RR	10 -	●
1090	Brutale RR	12 -	●
1090	Brutale RR Corsa	13 -	●

Street	Sport	Racing	Enduro	MX	Off-road Racing	ATV

ATV1

1204

KTM

SX / XC	450	ATV	08 - 2	●
SX / XC	505	ATV	08 - 2	●
SX / XC	525	ATV	08 - 2	●

Dim. / Size

76.5 mm
38.2 mm
7.5 mm

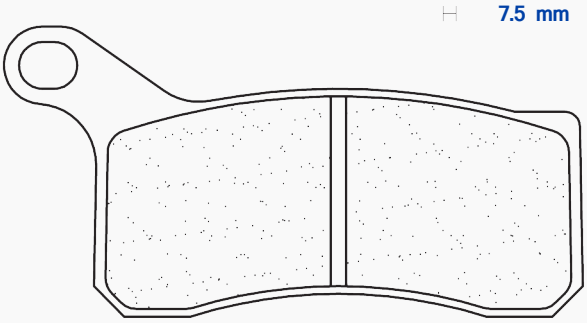

Street	Sport	Racing	Enduro	MX	Off-road Racing	ATV

X59 ATV1

KTM

SX / XC	450	ATV	08 -	●
SX / XC	505	ATV	08 -	●
SX / XC	525	ATV	08 -	●

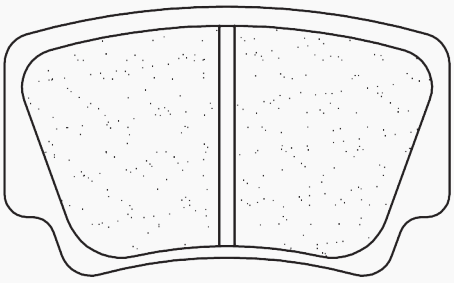

Dim. / Size

58.7 mm
35.4 mm
8.4 mm

1205

1 - 2 = Nombre de jeux avant / Number of front sets / Anzahl Sets / Numero blister / Numero des juegos
L = Gauche / Left / Links / Sinistra / Izquierda - R = Droite / Right / Rechts / Destra / Derecha

Street	Sport	Racing	Enduro	MX	Off-road Racing	ATV

XBK5 C60

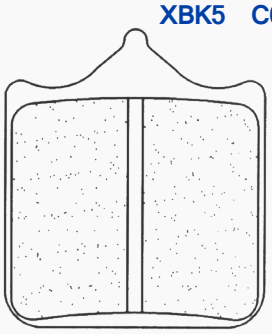

Dim. / Size

35 mm
40.5 mm
8.5 mm
Tôle / Backplate 4.5 mm

1207

BMW

S	1000 R	14 -	2	●
S	1000 RR	09 - 14	2	●
S	1000 RR	15 -	2	●

Street	Sport	Racing	Enduro	MX	Off-road Racing	ATV

XBK5 C60

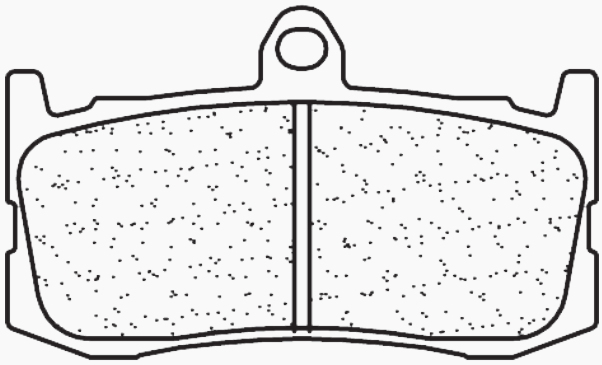

Dim. / Size

78.4 mm
46.5 mm
8 mm

1209

TRIUMPH

	675 Daytona (Rad.cal)	09 -	2	●

Street	Sport	Racing	Enduro	MX	Off-road Racing	ATV

RX3

Dim. / Size

97.6 mm
64 mm
8 mm

1211

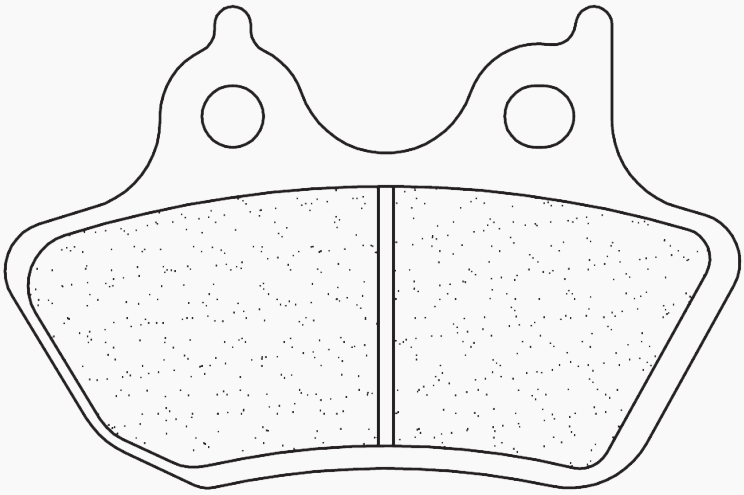

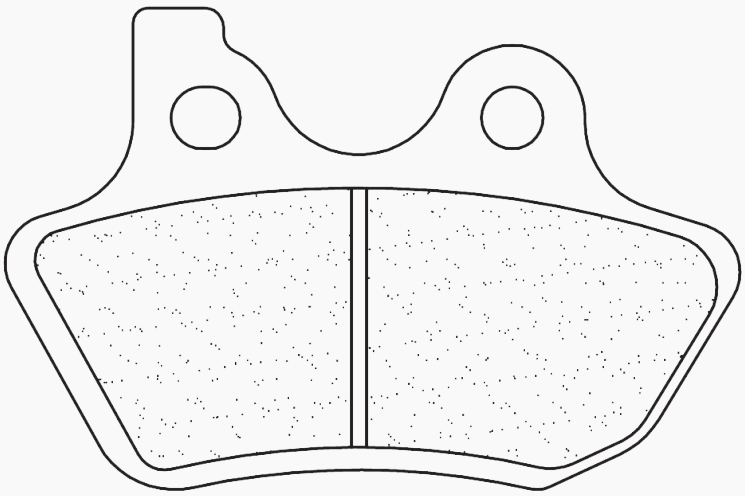

HARLEY DAVIDSON

FXDI	1450 35th Anniversary Super Glide	06 -	●
FLSTI	1450 Heritage Softail	06 -	●
FXSTBI	1450 Night Train	06 -	●
FXSTSI	1450 Softail	06 -	●
FXSTDI	1450 Softail Deuce	05 - 06	●
FXSTI	1450 Softail Standard	05 - 06	●
FXDL	1584 Dyna Low Rider	07 -	●
FXDB	1584 Dyna Street Bob	07	●
FXD	1584 Dyna Super Glide	07 -	●
FXDC	1584 Dyna Super Glide Custom	07 -	●
FXDWG	1584 Dyna Wide Glide	07 -	●
FLHTC	1584 Electra Glide Classic	07 -	●
FLHT	1584 Electra Glide Standard	07 -	●
FLSTC	1584 Heritage Softail Classic	07 - 08	●
FXSTB	1584 Night Train	07 -	●
FLHR	1584 Road King	07 -	●
FLHRC	1584 Road King Classic	07 -	●
FLHRS	1584 Road King Custom	07 -	●
FLSTSCI	1584 Softail	07 -	●
FLSTN	1584 Softail Deluxe	07 -	●
FLSTN	1584 Softail Deluxe	07 -	●
FXSTD	1584 Softail Deuce	07 -	●
FXST	1584 Softail Standard	07 -	●
FLHX	1584 Street Glide	07 -	●
FLHTCU	1584 Ultra Classic Electra Glide	07 -	●

1212

Street	Sport	Racing	Enduro	MX	Off-road Racing	ATV

A3+

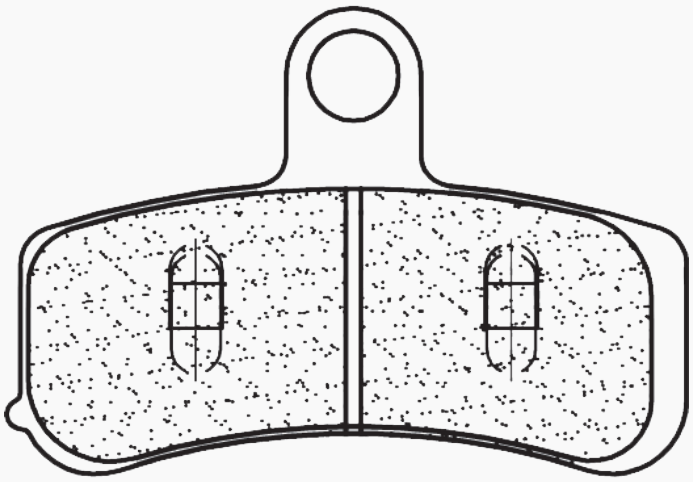

Dim. / Size

90.5 mm
62 mm
8 mm

HARLEY DAVIDSON

FXDL	1584 Dyna Low Rider	08 -	1	●
FXDB	1584 Dyna Street Bob	08 -	1	●
FXD	1584 Dyna Super Glide	08 -	1	●
FXDC	1584 Dyna Super Glide Custom	08 -	1	●
FXDWG	1584 Dyna Wide Glide	08 -	1	●
FXDF	1584 Fat Bob	08 -	1	●
FLSTF	1584 Fat Boy	08 -	1	●
FLSTC	1584 Heritage Softail Classic	08 - 14	1	●
FXSTB	1584 Night Train	08 -	1	●
FXCW	1584 Rocker	08 -	1	●
FXCWC	1584 Rocker C	08 -	1	●
FXSTC	1584 Softail Custom	08 -	1	●
FLSTN	1584 Softail Deluxe	08 -	1	●
FXST	1584 Softail Standard	08 - 14	1	●
FXS	1690 Blackline	13 -	1	●

HARLEY DAVIDSON

FXSB	1690 Breakout	13 - 14	1	●
FXDL	1690 Dyna Low Rider	14 -	2	●
FXDB	1690 Dyna Street Bob	14 -	1	●
FXDBA	1690 Dyna Street Bob	13 -	1	●
FXDBB	1690 Dyna Street Bob	14 -	1	●
FXDBP	1690 Dyna Street Bob	13 -	1	●
FXDC	1690 Dyna Super Glide Custom	14 -	1	●
FXDF	1690 Dyna Wide Glide	12 -	1	●
FLHTC	1690 Electra Glide Classic	11 -	1	●
FXDF	1690 Fat Bob	12 -	2	●
FLSTF	1690 Fat Boy	12 -	1	●
FLSTFB	1690 Fat Boy	12 -	1	●
FLSTF	1690 Fat Boy Special	12 -	1	●
FLSTC	1690 Heritage Softail Classic	12 -	1	●
FLHRC	1690 Road King Classic	11 -	1	●
FLSTN	1690 Softail Deluxe	12 -	1	●
FLS	1690 Softail Slim	12 - 14	1	●
FLD	1690 Switchback	12 -	1	●
FLHTK	1690 Ultra Electra Glide	11 -	1	●
FXSBSE	1802 CVO Breakout	13 -	1	●

1213

Street	Sport	Racing	Enduro	MX	Off-road Racing	ATV

RX3

HARLEY DAVIDSON

FXDL	1584 Dyna Low Rider	08 -	●
FXDB	1584 Dyna Street Bob	08 -	●
FXD	1584 Dyna Super Glide	08 -	●
FXDC	1584 Dyna Super Glide Custom	08 -	●
FXDWG	1584 Dyna Wide Glide	08 -	●
FXDF	1584 Fat Bob	08 -	●
FLSTF	1584 Fat Boy	08 -	●
FLSTC	1584 Heritage Softail Classic	08 - 14	●

HARLEY DAVIDSON

FLSTC	1584 Heritage Softail Classic	15 -	●
FLSTC	1584 Heritage Softail Deluxe	15 -	●
FLSTF	1584 Fat Boy	15 -	●
FXSTB	1584 Night Train	08 -	●
FXCW	1584 Rocker	08 -	●
FXCWC	1584 Rocker C	08 -	●
FXSTC	1584 Softail Custom	08 -	●
FLSTN	1584 Softail Deluxe	08 -	●

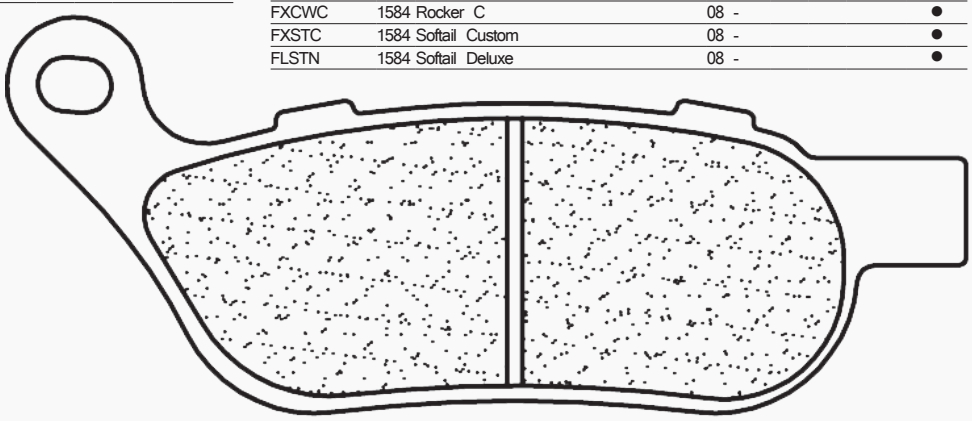

Dim. / Size

127.5 mm
52.6 mm
7.4 mm

1 - 2 = Nombre de jeux avant / Number of front sets / Anzahl Sets / Numero blister / Numero des juegos
L = Gauche / Left / Links / Sinistra / Izquierda - R = Droite / Right / Rechts / Destra / Derecha

1213 suite

Street	Sport	Racing	Enduro	MX	Off-road Racing	ATV
RX3						

HARLEY DAVIDSON			
FXST	1584 Softail Standard	08 - 14	●
FXST	1584 Softail Standard	15 -	●
FXS	1690 Blackline	13 -	●
FXSB	1690 Breakout	13 - 14	●
FXSB	1690 Breakout	15 -	●
FXDL	1690 Dyna Low Rider	14 -	●
FXDB	1690 Dyna Street Bob	14 -	●
FXDBA	1690 Dyna Street Bob	13 -	●
FXDBB	1690 Dyna Street Bob	14 -	●
FXDBP	1690 Dyna Street Bob	13 -	●
FXDC	1690 Dyna Super Glide Custom	14 -	●
FXDF	1690 Dyna Wide Glide	12 -	●
FLHTC	1690 Electra Glide Classic	11 -	●
FXDF	1690 Fat Bob	12 -	●

HARLEY DAVIDSON			
FLSTF	1690 Fat Boy	12 - 14	●
FLSTF	1690 Fat Boy	15 -	●
FLSTFB	1690 Fat Boy	12 -	●
FLSTF	1690 Fat Boy Special	12 -	●
FLSTC	1690 Heritage Softail Classic	12 -	●
FLHRC	1690 Road King Classic	11 -	●
FLSTN	1690 Softail Deluxe	12 -	●
FLS	1690 Softail Slim	12 - 14	●
FLS	1690 Softail Slim	15 -	●
FLD	1690 Switchback	12 -	●
FLHTK	1690 Ultra Electra Glide	11 -	●
FXSBSE	1802 CVO Breakout	13 -	●

1216

Street	Sport	Racing	Enduro	MX	Off-road Racing	ATV
A3+	XBK5					

HONDA				
VFR	1200 FAA/FAB/FAC/FAE (Manual)	10 - 14	2	●
VFR	1200 FADA/FADB/FADC/FADE - DCT (Auto)	10 - 14	2	●

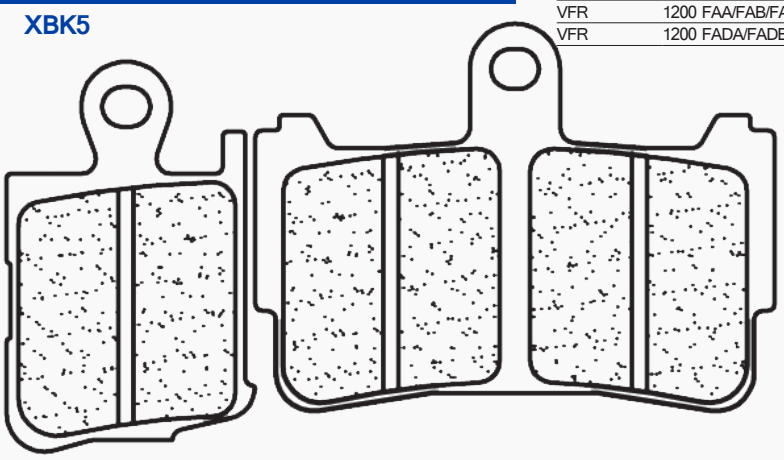

Dim. / Size
- 28.8 mm
- 51.7 mm
- 9 mm

Dim. / Size
- 69 mm
- 51.4 mm
- 9 mm

1217

Street	Sport	Racing	Enduro	MX	Off-road Racing	ATV
RX3						

Dim. / Size
- 99.4 mm
- 38 mm
- 9 mm

HONDA			
VFR	800 X Crossrunner	11 - 14	●
CB	1000 R (Rad.cal)	08 -	●
CB	1000 R (Rad.cal) ABS	08 -	●
CB	1000 R Neo Sports Cafe	18 -	●
VFR	1200 FAA/FAB/FAC/FAE	10 - 14	●

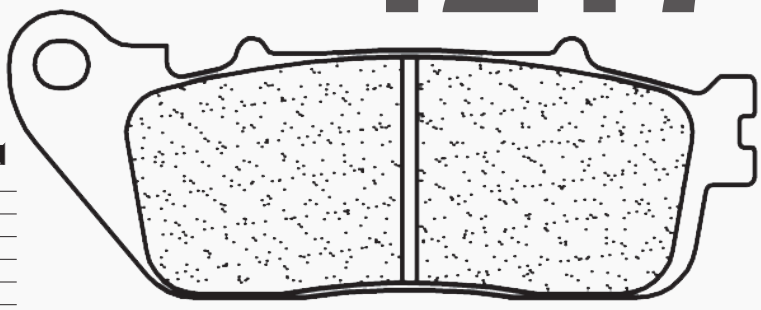

1219

Street	Sport	Racing	Enduro	MX	Off-road Racing	ATV
					X59	

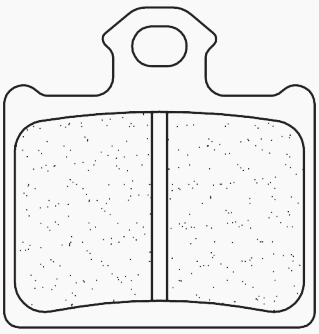

Dim. / Size
- 41 mm
- 42.3 mm
- 7.3 mm

HUSQVARNA				
CR	65		12 -	●
TC	85	(2T)	14	●
KTM				
		Freeride E-SX / E-XC	12 -	●
SX	85	CC	12 -	●
SX	85		11	●
	250	Freeride R (2T)	14 -	●
	350	Freeride (4T)	12 -	●

1 - 2 = Nombre de jeux avant / Number of front sets / Anzahl Sets / Numero blister / Numero des juegos
L = Gauche / Left / Links / Sinistra / Izquierda - R = Droite / Right / Rechts / Destra / Derecha

Street	Sport	Racing	Enduro	MX	Off-road Racing	ATV

ATV1

1220

Dim. / Size

97 mm
47 mm
7.6 mm

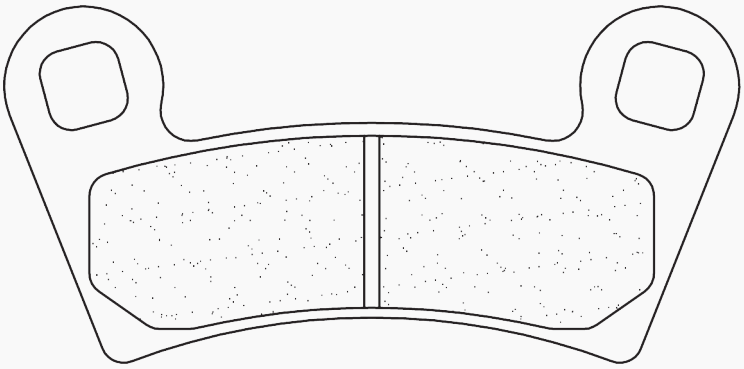

POLARIS				
450 Outlaw MXR	09 - 10	2	●	
450 Outlaw S	08	2	●	
525 Outlaw IRS	08 - 10	2	●	
525 Outlaw S	08 - 10	2	●	
570 RZR	12 -	2	●	
800 RZR	08 -	2	●	

Street	Sport	Racing	Enduro	MX	Off-road Racing	ATV

ATV1

1222

Dim. / Size

96.9 mm
43.2 mm
7.6 mm

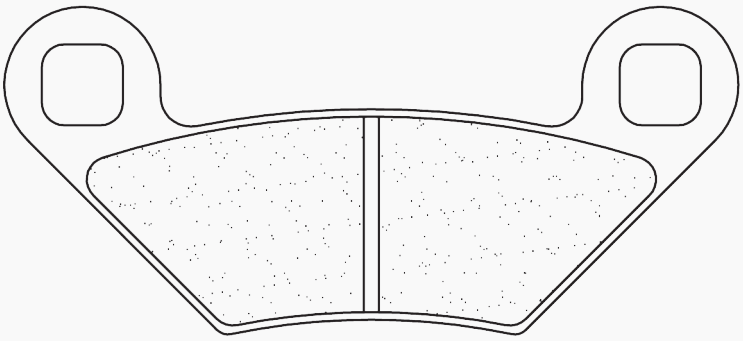

POLARIS				
500 XP Sportsman	09	2	●	●
550 Sportsman Touring EPS	10 -	2	●	●
550 Sportsman X2	10	2	●	●
550 XP Sportsman EPS	09 - 10	2	●	●
570 Sportsman Efi EPS	11 - 13			●
570 Sportsman Touring Efi	14 -			●
800 Sportsman	12 - 14	2	●	●
800 Sportsman Efi	10 - 13			●
850 XP EPS Sportsman	09 - 13	2	●	●
850 XP Sportsman	09 - 13	2	●	●

Street	Sport	Racing	Enduro	MX	Off-road Racing	ATV

A3+ RX3

1223

Dim. / Size

49.8 mm
47 mm
7 mm

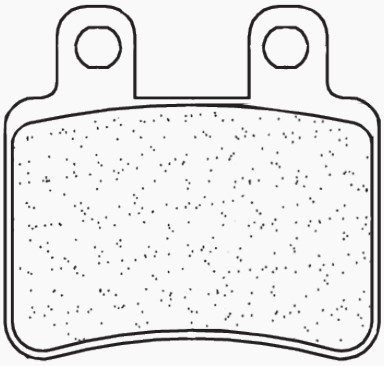

YAMAHA				
XT 125 R	05 -	1	●	●
XT 125 X Supermotard	05 -			●

Street	Sport	Racing	Enduro	MX	Off-road Racing	ATV

S4 A3+

1224

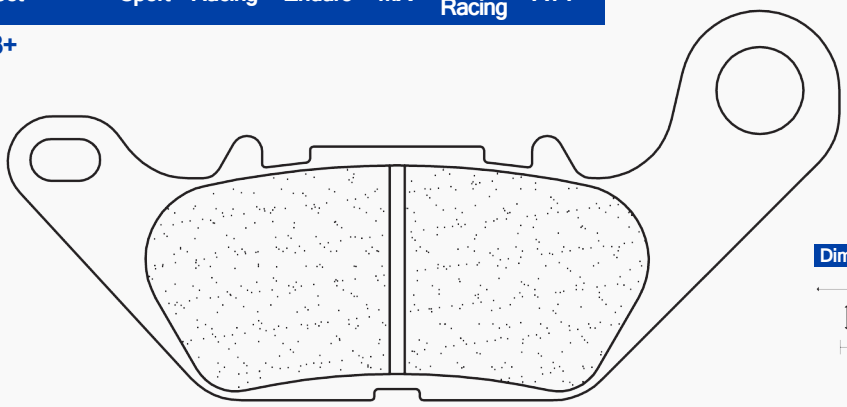

Dim. / Size

109.9 mm
51.4 mm
8.5 mm

1 - 2 = Nombre de jeux avant / Number of front sets / Anzahl Sets / Numero blister / Numero des juegos
L = Gauche / Left / Links / Sinistra / Izquierda - R = Droite / Right / Rechts / Destra / Derecha

Street	Sport	Racing	Enduro	MX	Off-road Racing	ATV

S4 A3+

1224 suite

Dim. / Size
95.6 mm
37.5 mm
8.5 mm

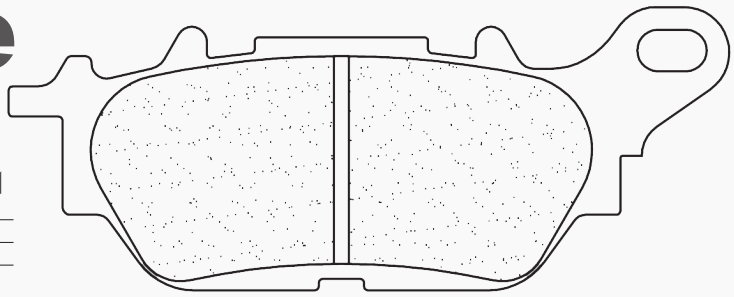

YAMAHA					
YBR	125 (3D92/9)	07 -	1	●	
YBR	125 Custom	08 -	1	●	

Street	Sport	Racing	Enduro	MX	Off-road Racing	ATV

MX10

1228

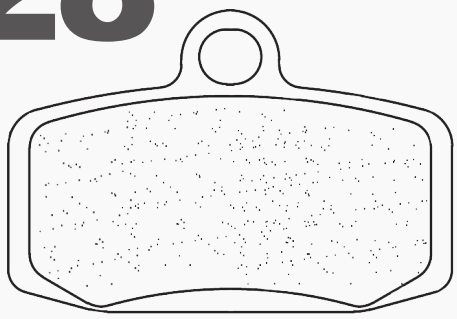

Dim. / Size
59 mm
40 mm
7.5 mm

GAS GAS					
TXT	125 (Formula front caliper/single pin pad)	12	1	●	
TXT	250 (Formula front caliper/single pin pad)	12	1	●	
TXT	280 (Formula front caliper/single pin pad)	12	1	●	
TXT	300 (Formula front caliper/single pin pad)	12	1	●	
HUSQVARNA					
TC	85 (2T)	14	1	●	
KTM					
	Freeride E-SX / E-XC	12 -	1	●	
SX	85 CC	12 -	1	●	
	250 Freeride R (2T)	14 -	1	●	
	350 Freeride (4T)	12 -	1	●	
SHERCO					
ST	80 (2T)	13 - 14	1	●	
ST	125 (2T)	13 - 14	1	●	
ST	250 (2T)	13 - 14	1	●	
ST	290 (2T)	13 - 14	1	●	
ST	305 (2T)	13 - 14	1	●	

Street	Sport	Racing	Enduro	MX	Off-road Racing	ATV

ATV1

POLARIS					
500 Ranger 2x4	08 -	2	●		
500 Ranger 2x4 Efi	08 -	2	●		
500 Ranger 4x4	12 -	2	●		
700 MVRS 4x4	08 -	2	●	●	
700 Ranger 4x4 Efi	08 -	2	●	●	
700 Ranger 6x6 Efi	12 -	2	●		
800 MVRS 4x4	08 -	2	●	●	
800 Ranger 4x4 Efi	10 -	2	●	●	
800 Ranger 6x6 Efi	10 -	2	●	●	
800 Ranger Crew	12 -	2	●	●	
800 Ranger RZR4 Efi	12 -	2	●		
800 Ranger XP	12 -	2	●		
900 Ranger 4x4 Diesel	10 -	2	●	●	
900 Ranger RZR4 XP Efi	12 -	2	●	●	
900 Ranger RZR4 XP4 Efi	12 -	2	●	●	
900 XP ESP	13 -	2	●		
1000 RZR XP Turbo EPS	16 -	2		●	

Dim. / Size
120.5 mm
57.2 mm
7.5 mm

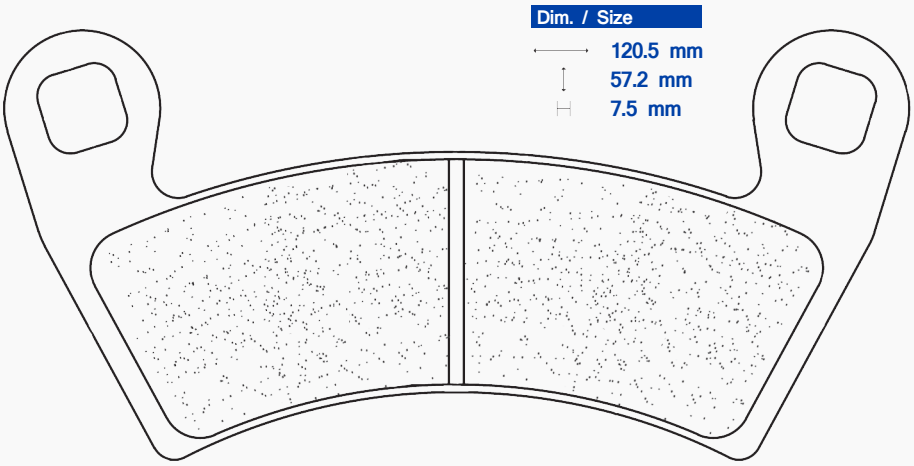

1229

1 - 2 = Nombre de jeux avant / Number of front sets / Anzahl Sets / Numero blister / Numero des juegos
L = Gauche / Left / Links / Sinistra / Izquierda - R = Droite / Right / Rechts / Destra / Derecha

Street | Sport | Racing | Enduro | MX | Off-road Racing | ATV

ATV1

1230

Dim. / Size
97 mm
51 mm
7.5 mm

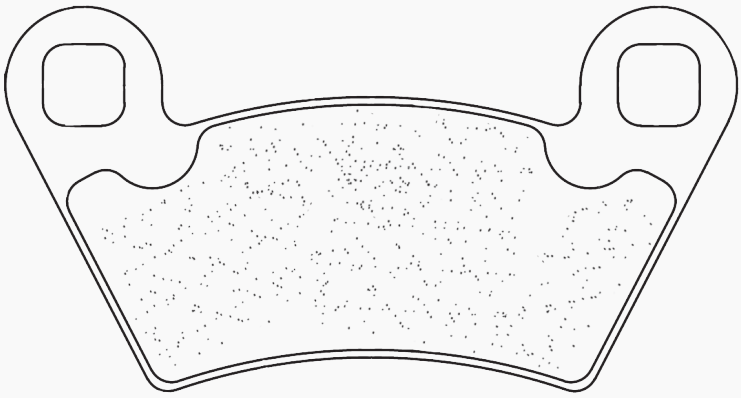

POLARIS			
900 XP ESP	13 -		●

Street | Sport | Racing | Enduro | MX | Off-road Racing

RX3

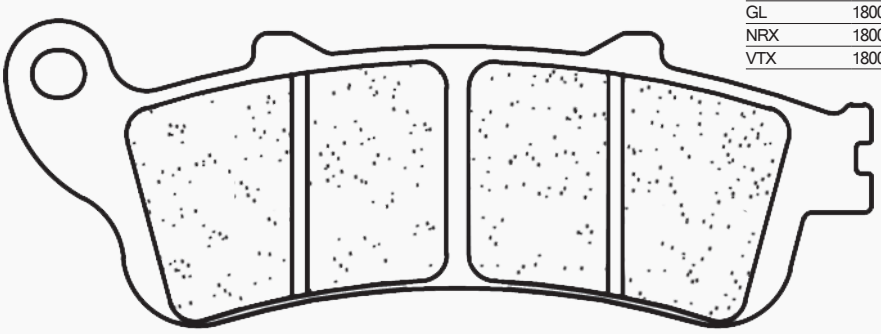

1231

Dim. / Size
115 mm
40 mm
11 mm

HONDA			
GL	1800 F6C Valkyrie	14 -	●
GL	1800 Goldwing	01 -	●
GL	1800 Goldwing F6B	13 -	●
NRX	1800 Valkyrie Rune	04 -	●
VTX	1800	01 -	●

Street | Sport | Racing | Enduro | MX | Off-road Racing | ATV

A3+ XBK5 C60

1232

Dim. / Size
85 mm
50.8 mm
8 mm

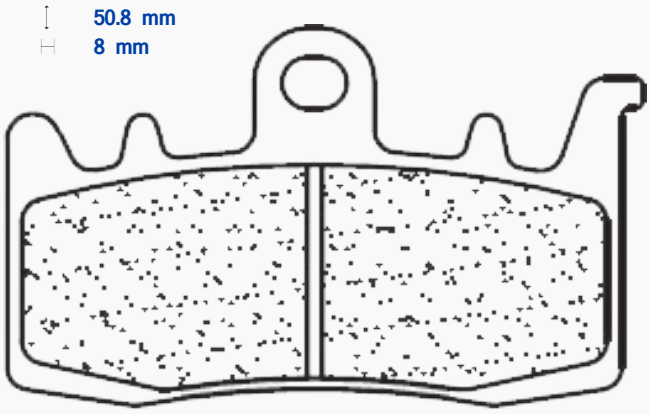

APRILIA				
V4R	1000 Tuono APRC ABS	13 -	2	●
V4RR	1100 Tuono / Tuono Factory	15 -	2	●
ETV	1200 Caponord	13 -	2	●
ETV	1200 Caponord Rally	15 -	2	●
BENELLI				
BN	600 R	14	2	●
BMW				
F	800 R	15 -	2	●
S	1000 XR	15 -	2	●
R	1200 GS	13	2	●
R	1200 GS / GS Adventure	14 -	2	●
R	1200 Nine T	14 -	2	●
R	1200 Nine T Pure / Scrambler	17 -	2	●
R	1200 Nine T Urban GS / Racer	17 -	2	●
BMW				
R	1200 R / RS	15 -	2	●
R	1200 RT	14 -	2	●
CAN-AM				
	998 Spyder RS (Brembo)	13 -	2	●
	998 Spyder RS-S (Brembo)	13 -	2	●
	998 Spyder ST (Brembo)	13 -	2	●
	998 Spyder ST LTD (Brembo)	13 -	2	●
	998 Spyder ST-S (Brembo)	13 -	2	●
	1330 Spyder RT (Brembo)	13 -	2	●
	1330 Spyder RT LTD (Brembo)	13 -	2	●
	1330 Spyder RT-S (Brembo)	13 -	2	●
DUCATI				
	797 Monster / +	17 -	2	●
	800 Scrambler (All models)	15 -	1	●
	803 Scrambler Cafe Racer / Desert Sled	17 -	1	●
	821 Hypermotard	13 -	2	●
	821 Hypermotard SP	13 -	2	●
	821 Hyperstrada	13 -	2	●
	821 Monster / Monster Dark	15 -	2	●
	939 Hypermotard / SP	16 -	2	●
	939 Hyperstrada	16 -	2	●
	939 Supersport / S	17 -	2	●
	950 Multistrada	17 -	2	●
	959 Panigale / Corse	16 -	2	●
	899 Panigale	13 -	2	●
	1200 Monster	14 -	2	●
	1200 Multistrada	15 -	2	●
	1200 Multistrada Enduro	16 -	2	●
	1260 Multistrada	18 -	2	●
MV AGUSTA				
	800 Rivale	13 -	2	●
	800 Stradale	15 -	2	●
	800 Turismo Veloce	14 -	2	●
	800 Turismo Veloce Lusso	14 -	2	●
TRIUMPH				
	765 Street Triple R	17 -	2	●
	1200 Tiger XC / XCx / XCa	18 -	2	●
	1200 Tiger XR / XRx / XRt	18 -	2	●
	1200 Tiger Explorer	16 - 17	2	●

1 - 2 = Nombre de jeux avant / Number of front sets / Anzahl Sets / Numero blister / Numero des juegos
L = Gauche / Left / Links / Sinistra / Izquierda - R = Droite / Right / Rechts / Destra / Derecha

Street	Sport	Racing	Enduro	MX	Off-road Racing	ATV
A3+	XBK5					

1233

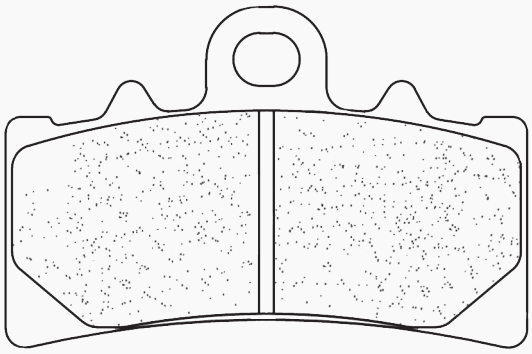

Dim. / Size
69.4 mm
45.3 mm
9 mm

KTM					
	125	Duke	11 -	1	●
	125	Euro Trail	96 -	1	●
	200	Duke	12 -	1	●
RC	200		14 -	1	●
	390	Duke	13 -	1	●
RC	390		14 -	1	●
BMW					
G	313	310 R	16 -	1	●
G	313	310 GS	18 -	1	●
HUSQVARNA					
	401	Vitpilen	17 -	1	●
	401	Svartpilen	17 -	1	●

Street	Sport	Racing	Enduro	MX	Off-road Racing	ATV
						ATV1

SUZUKI					
KLT-A	400	King Quad	08 -	1 L	●
KLT-F	400	King Quad	08 -	1 L	●
LT-A	400	King Quad	08 -	1 L	●
LT-F	400	King Quad	08 -	1 L	●
LT-A	450	King Quad	07 -	1 L	●
LT-A	500	XPLO	10 -	1 R	●
LT-A	700	King Quad	05 - 07	1 R	●
LT-A	750	King Quad	08 - 09	1 R	●
LT-A	750	XPLO	10 -	1 R	●

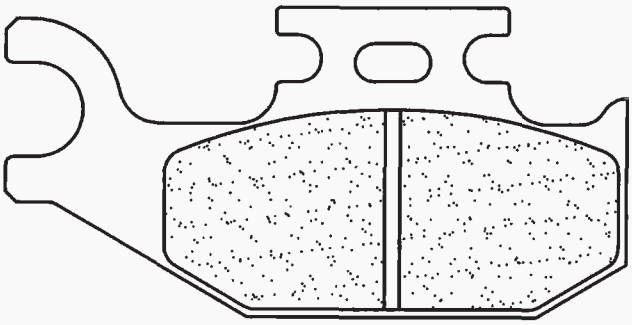

Dim. / Size
82 mm
40.8 mm
8.3 mm

1235

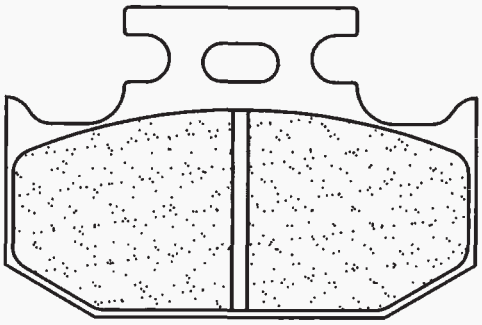

Dim. / Size
62 mm
40.8 mm
8.3 mm

Street	Sport	Racing	Enduro	MX	Off-road Racing	ATV
						ATV1

1236

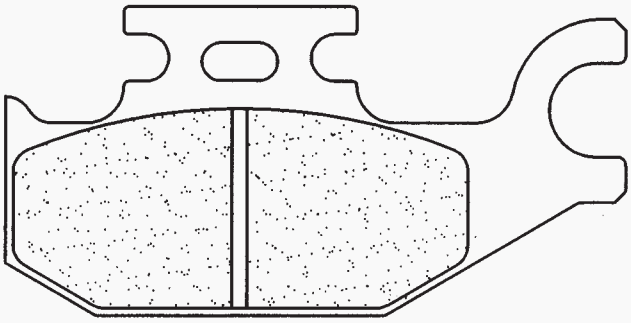

Dim. / Size
82 mm
40.8 mm
8.3 mm

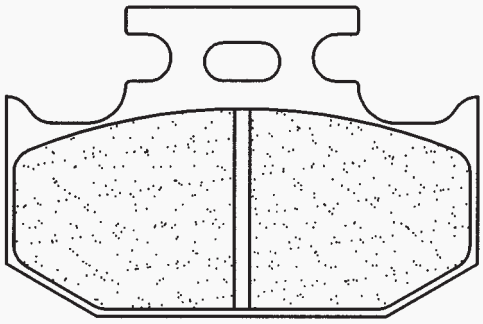

Dim. / Size
62 mm
40.8 mm
8.3 mm

1 - 2 = Nombre de jeux avant / Number of front sets / Anzahl Sets / Numero blister / Numero des juegos
L = Gauche / Left / Links / Sinistra / Izquierda - R = Droite / Right / Rechts / Destra / Derecha

1236 suite

Street	Sport	Racing	Enduro	MX	Off-road Racing	ATV

ATV1

SUZUKI

KLT-A	400	King Quad	08 -	1	R	●
KLT-F	400	King Quad	08 -	1	R	●
LT-A	400	King Quad	08 -	1	R	●
LT-F	400	King Quad	08 -	1	R	●
LT-A	450	King Quad	07 -	1	R	●
LT-A	500	XPLO	10 -	1	L	●
LT-A	700	King Quad	05 - 07	1	L	●
LT-A	750	King Quad	08 - 09	1	L	●
LT-A	750	XPLO	10 -	1	L	●

Street	Sport	Racing	Enduro	MX	Off-road Racing	ATV

RX3

Dim. / Size
97.6 mm
64 mm
8 mm

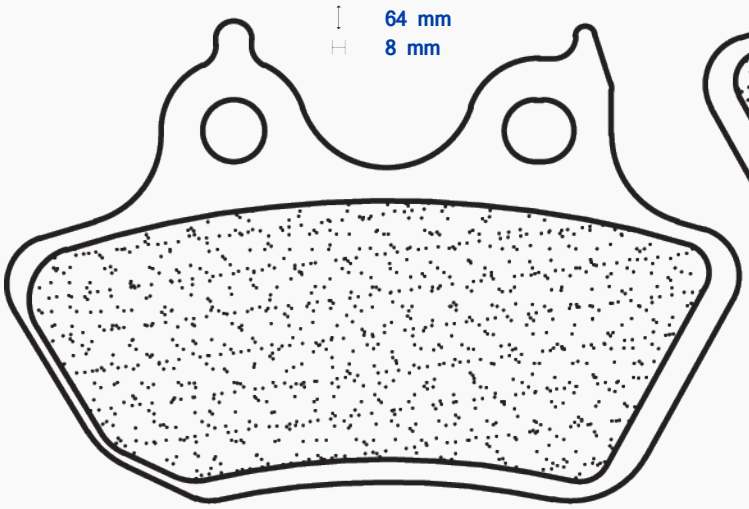

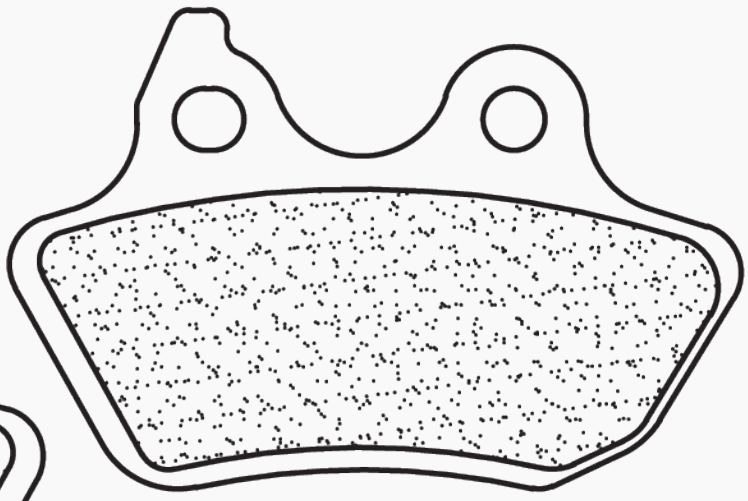

Dim. / Size
97.6 mm
64 mm
8 mm

1237

HARLEY DAVIDSON

FXST/FXSTI	1450	Softail Standard	06 - 07	●
FXSTB/FXSTBI	1450	Night Train Softail	06 - 07	●
FLSTSC/FLSTSCI	1450	Springer Softail Classic	06 - 07	●
FLSTF/FLSTFI	1584	Fat Boy	07	●
FXSTC	1584	Softail Custom	07	●

Street	Sport	Racing	Enduro	MX	Off-road Racing	ATV

ATV1

KYMCO

500	MXu i (4x4 RS) (LAAOCD/CM)	09 - 14	2	●	●
500	MXu i DX	11 - 13	2	●	●
550	MXu i	12	2	●	●
550	MXu i (4x4) LOF	13 - 14	2	●	●
700	MXu i (4x4) LOF	13 - 14	2	●	●
700	MXu i Turf	14	2	●	●

Dim. / Size
102 mm
42.9 mm
7.8 mm

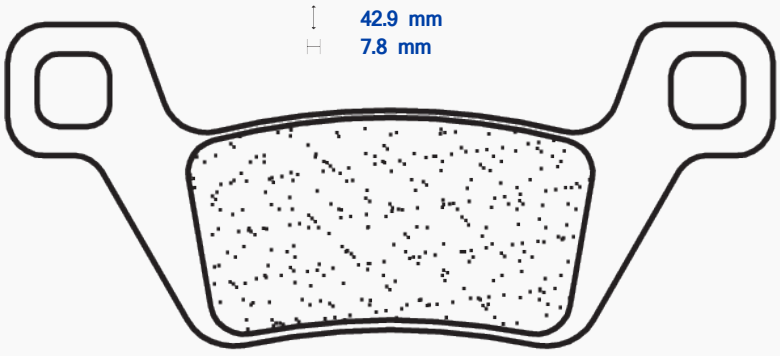

1238

1 - 2 = Nombre de jeux avant / Number of front sets / Anzahl Sets / Numero blister / Numero des juegos
L = Gauche / Left / Links / Sinistra / Izquierda - R = Droite / Right / Rechts / Destra / Derecha

Street	Sport	Racing	Enduro	MX	Off-road Racing	ATV

RX3

1239

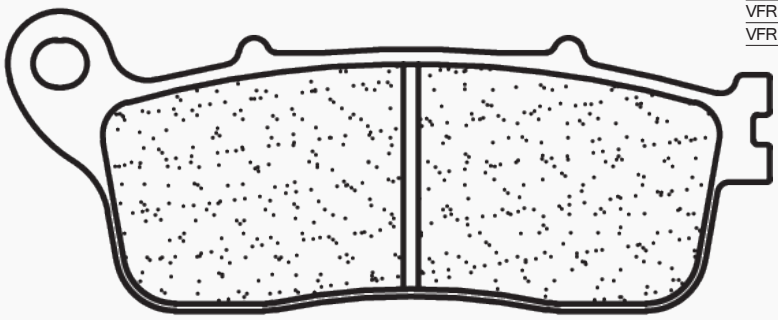

HONDA

VFR	800 FAE	14	●
VFR	1200 FADA/FADB/FADC/FADE - DCT (Auto)	10 - 14	●
VFR	1200 XAC/XAD/XAE Crosstourer (Manual)	12 - 14	●
VFR	1200 XDC/XDE - DCT Crosstourer (Auto)	12 - 14	●
VFR	1200 XDC - DCT Crosstourer Highlander (Auto)	13 - 14	●

Dim. / Size

101.9 mm
40 mm
11 mm

Street	Sport	Racing	Enduro	MX	Off-road Racing	ATV

XBK5

1240

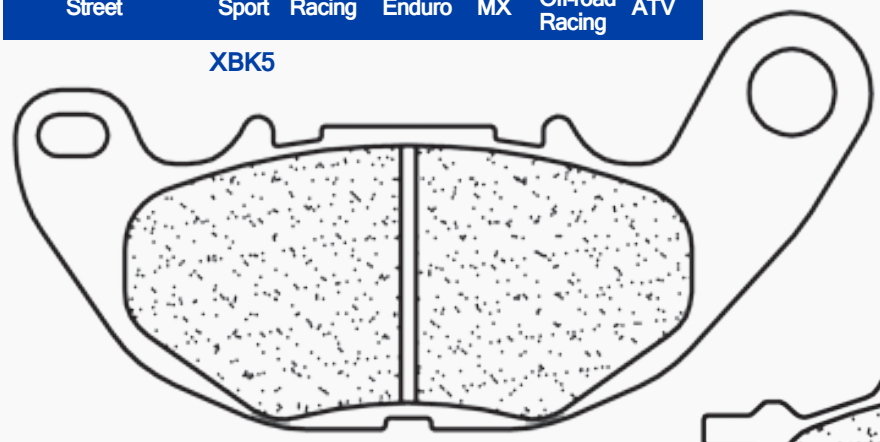

Dim. / Size

113.3 mm
55 mm
8.3 mm

Dim. / Size

98.7 mm
44.8 mm
8.3 mm

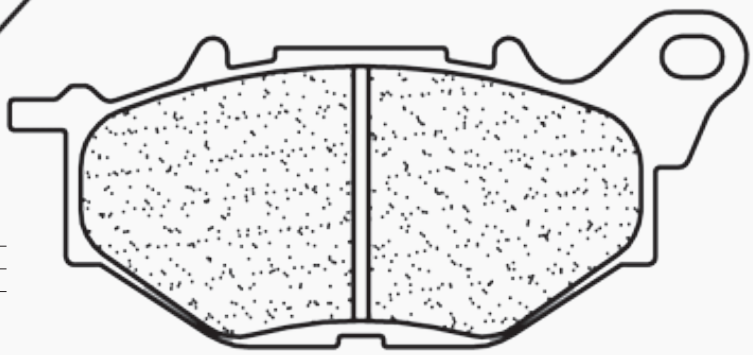

YAMAHA

YZF	321 R3	15 -	1	●
MT-03	321	16 -	1	●

Street	Sport	Racing	Enduro	MX	Off-road Racing	ATV

RX3

1241

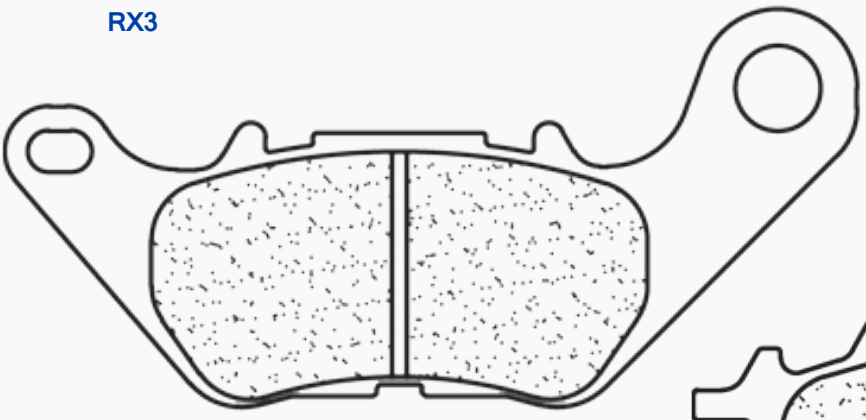

Dim. / Size

113.3 mm
52.9 mm
11.3 mm

Dim. / Size

97.1 mm
40 mm
11.3 mm

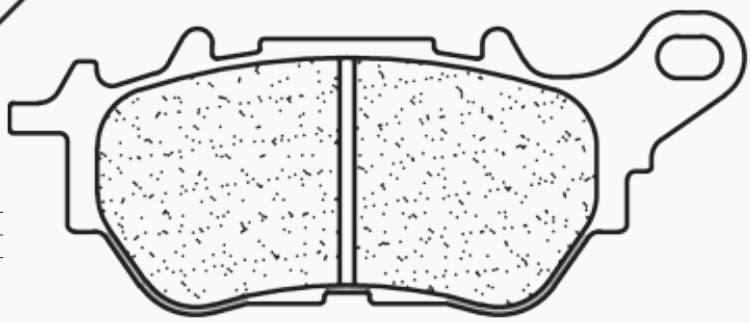

YAMAHA

YZF	321 R3	15 -	●
MT-03	321	16 -	●

Street	Sport	Racing	Enduro	MX	Off-road Racing	ATV

MX10

1243

Dim. / Size
52.5 mm
44 mm
7.2 mm

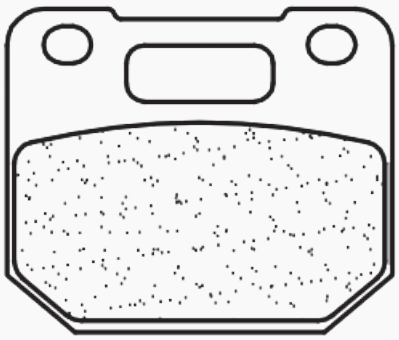

YCF

YCF Radial Aftermarket	1	●	

Street	Sport	Racing	Enduro	MX	Off-road Racing	ATV

RX3 X59

1244

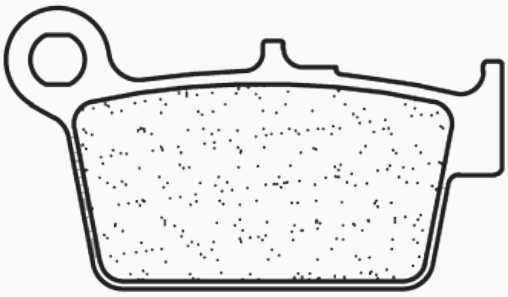

Dim. / Size
65.6 mm
37 mm
7.8 mm

Dim. / Size
65.6 mm
37 mm
7.8 mm

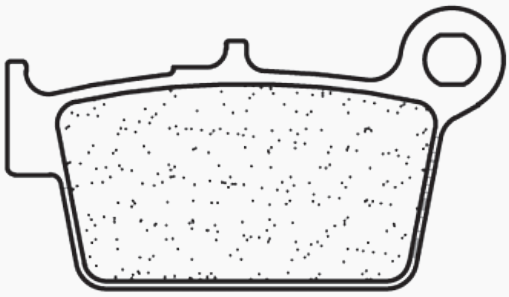

BETA

RR	50	Enduro	04 - 07		●
	125	ALP (4T)	05 - 15		●
RR	125	Motard (4T) (A/C - spoke wheels)	08 - 14		●
RR	125	Motard (4T) (A/C - spoke wheels)	11 - 14		●
	125	Urban	08 - 15		●
	125	Urban Special	09 - 15		●
	200	ALP (4T)	05 - 12		●
	200	Urban	08 - 15		●
	350	ALP (4T)	05 - 12		●
	350	M4	06 - 12		●

Street	Sport	Racing	Enduro	MX	Off-road Racing	ATV

A3+ XBK5

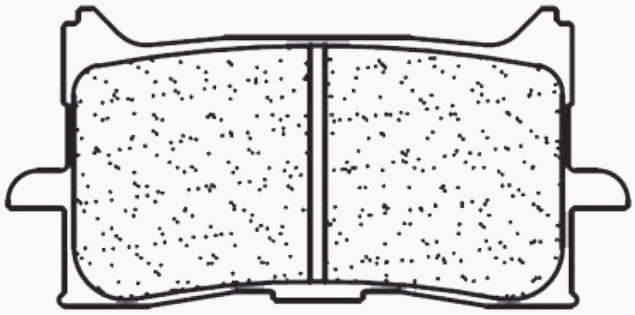

HONDA

CRF	1000 L Africa Twin	16 -	2	●	
CB	1000 R Neo Sports Cafe	18 -	2	●	
CB	1100 RS	17 -	2	●	

Dim. / Size
82.8 mm
39.7 mm
8 mm

1245

1 - 2 = Nombre de jeux avant / Number of front sets / Anzahl Sets / Numero blister / Numero des juegos
L = Gauche / Left / Links / Sinistra / Izquierda - R = Droite / Right / Rechts / Destra / Derecha

1247

Street	Sport	Racing	Enduro	MX	Off-road Racing	ATV

ATV1

POLARIS

1000 RZR XP Turbo EPS	16 -		●

Dim. / Size

155 mm
53 mm
7.6 mm

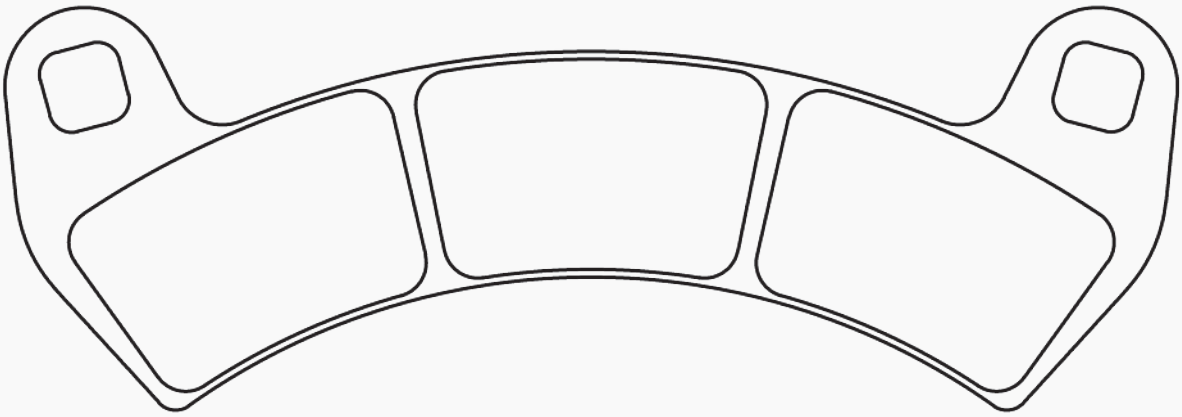

1250

Street	Sport	Racing	Enduro	MX	Off-road Racing	ATV

RX3

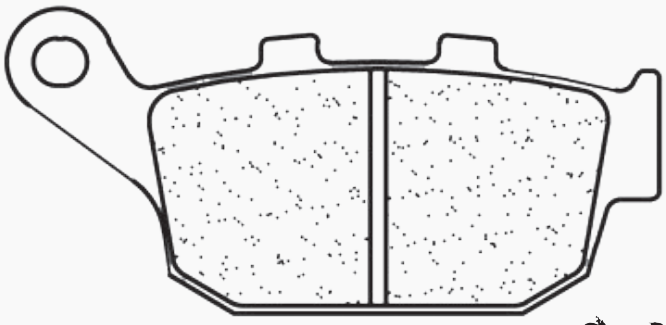

HONDA

CBR	250	R / RR	90 - 92	●
CBR	250	RAB / RAC (ABS)	11 - 13	●
CBR	250	RB / RC (Non ABS)	11 - 13	●
CB	300	FAF / FAG (ABS)	15 -	●
CBR	300	RA (ABS)	14 - 15	●
CB	500	FAD / FAE / FAF / FAG	13 - 16	●
CB	500	FD / FE / FF (Non ABS)	13 - 16	●
CB	650	F (ABS)	14 -	●
CBR	650	F (ABS)	14 -	●
CTX	700	DE / DCT	14 -	●
CTX	700	N / DCT	14 - 15	●
NC	750	Integra	14 - 16	●
NC	750	Integra S	14 -	●
NC	750	NC S / S DCT	14 - 16	●
NC	750	NC X / X DCT	14 - 16	●

Dim. / Size

86 mm
40.1 mm
9 mm

Dim. / Size

86 mm
40.1 mm
9 mm

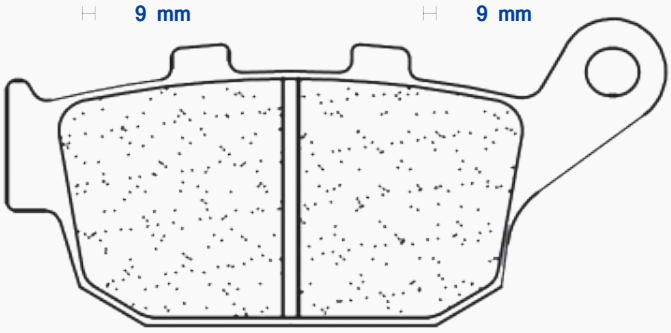

SUZUKI

GW	250	Inazuma	12 - 15	●
SFV	650	Gladius	09 - 15	●
SV	650	(ABS)	16 -	●

1251

Street	Sport	Racing	Enduro	MX	Off-road Racing	ATV

C60

BREMBO

XB0 P1 / P4 30/34 108mm Radial caliper (Racing)	1	●

Dim. / Size

94 mm
34 mm
9.5 mm

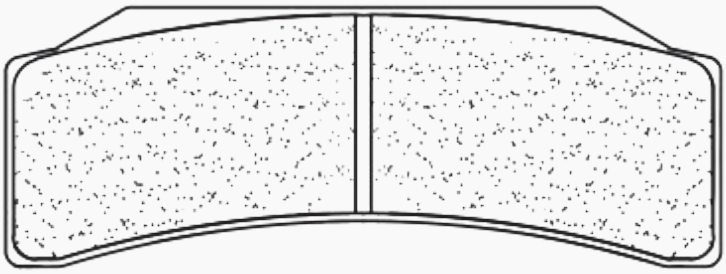

1 - 2 = Nombre de jeux avant / Number of front sets / Anzahl Sets / Numero blister / Numero des juegos
L = Gauche / Left / Links / Sinistra / Izquierda - R = Droite / Right / Rechts / Destra / Derecha

Street	Sport	Racing	Enduro	MX	Off-road Racing	ATV
A3+	XBK5	C60				

Dim. / Size

72.5 mm
53.3 mm
8 mm

1252

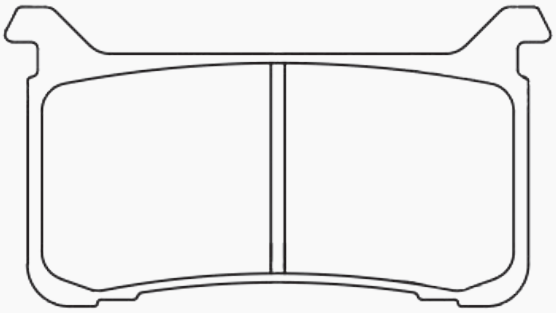

HONDA					
CBR	1000 RR Fireblade	17 -	2	●	

Street	Sport	Racing	Enduro	MX	Off-road Racing	ATV
A3+	XBK5					

KAWASAKI					
ZZR	1400 (Rad.cal)	12 - 15	2	●	
ZZR	1400 Performance MY	16 -	2	●	
GTR	1400 (Rad.cal)	10 - 15	2	●	

Dim. / Size

37.7 mm
49.9 mm
7.9 mm

1253

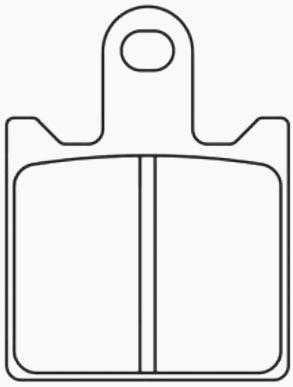

1 - 2 = Nombre de jeux avant / Number of front sets / Anzahl Sets / Numero blister / Numero des juegos
L = Gauche / Left / Links / Sinistra / Izquierda - R = Droite / Right / Rechts / Destra / Derecha

Street	Sport	Racing	Enduro	MX	Off-road Racing	ATV
S4 A3+	XBK5	C60				

Dim. / Size

67.7 mm
54 mm
8 mm

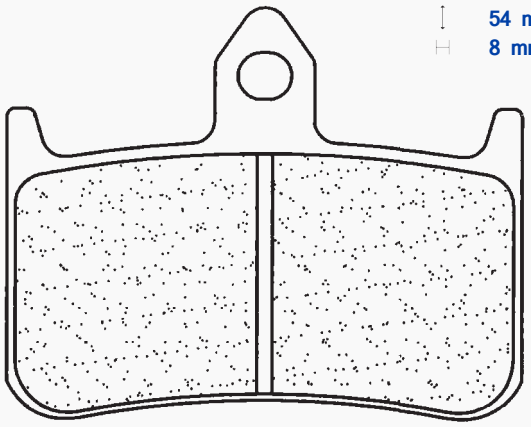

HONDA				
NS	125	89	1	●
NS	250	89	1	●
NSR	250 R / SP	90	2	●
NSR	250 RJ	88 -	2	●
RS	250 R	91 - 92	2	●
NTV	400 Bros II	88	1	●
VTR	400 R	90	2	●
VFR	400 R NC30	89 -	2	●
RVF	400 RR (NC35)	90 - 96	2	●
NTV	600 Bros	88 -	1	●
NTV	650 Bros	88 -	2	●
NR	750	92	2	●
VFR	750 R (RC 30)	88 - 93	2	●
RVF	750 RR (RC45)	94 -	2	●
CB	900 Hornet (919)	02 -	2	●
CBR	900 RR Fireblade	92 - 97	2	●
CB	1000 F Big One	93 - 97	2	●
VTR	1000 F Firestorm / Super Hawk	97 - 06	2	●
CB	1300 X-4	97 - 00	2	●

2245

Street	Sport	Racing	Enduro	MX	Off-road Racing	ATV
A3+	XBK5	C60				

2246

Dim. / Size

69.8 mm
55.1 mm
8.5 mm

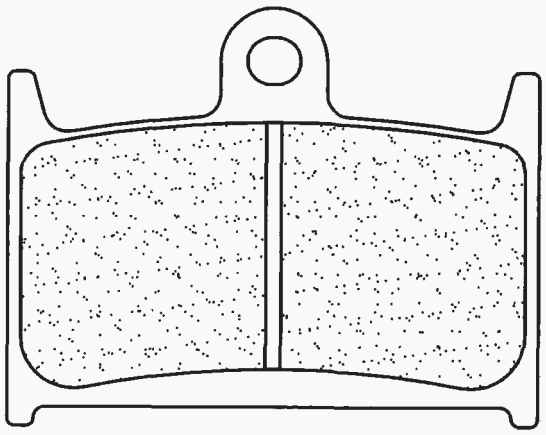

INDIAN				
	1800 Chief Classic (Brembo calipers)	11 - 13	2	●
	1800 Chief Deluxe (Brembo calipers)	09 - 13	2	●
	1800 Chief Vintage (Brembo calipers)	09 - 13	2	●
	1800 Chief Roadmaster (Brembo calipers)	09 - 11	2	●
	1800 Chief Standard (Brembo calipers)	09 - 11	2	●
MZ / MUZ				
	1000 S	03 - 07	2	●
	1000 SF	05 - 07	2	●
	1000 SFX	07 -	2	●
	1000 SN	05 -	2	●
	1000 ST	07 -	2	●
NISSIN				
4 Piston caliper (Road / Racing)			1	●
SUZUKI				
GSX-R	400 RL/RM/RN/RP/RS (GK76A)	90 - 95	2	●
GSX-R	600	93 - 96	2	●
GSX-R	750 J / K / L / M / WN / WP	88 - 93	2	●
GSX-R	750 RG	86	2	●
GSX-R	1100 K / L / M / N (GV73B)	89 - 92	2	●
GSX	1100 Katana	93 -	2	●
GSF	1200 S / N Bandit	95 - 00	2	●
GSF	1200 S / N Bandit ABS	97 -	2	●
TRIUMPH				
	600 Daytona	03 - 04	2	●
	600 Speed Four	02 - 05	2	●
	600 TT	00 - 03	2	●
	650 Daytona	05	2	●
	750 Daytona	91 - 92	2	●
	900 Daytona	93 - 96	2	●
	900 Speed Triple	94 - 96	2	●
T 509	900 Speed Triple	97 - 98	2	●
	900 Sprint	94 - 98	2	●

TRIUMPH				
	900 Sprint Sport Edition	97 - 98	2	●
	900 Trophy	96 -	2	●
T 595	950 Daytona	97 - 98	2	●
	955 Daytona	99 - 06	2	●
	955 Daytona Centennial	02	2	●
	955 Speed Triple	99 - 04	2	●
	955 Sprint RS	99 - 04	2	●
	955 Sprint ST	99 - 04	2	●
	1000 Daytona	91 - 95	2	●
	1050 Sprint GT ABS	10 -	2	●
	1050 Sprint ST	05 - 09	2	●
	1050 Sprint ST ABS	10 -	2	●
	1200 Daytona	93 - 98	2	●
	1200 Tiger Explorer	12 - 15	2	●
	1200 Trophy	96 - 03	2	●
	1600 Thunderbird	09 - 13	2	●
	1700 Thunderbird Commander	14 -	2	●
	1700 Thunderbird Night Storm	15 -	2	●
	1700 Thunderbird LT	14 -	2	●
	1700 Thunderbird Storm	11 - 13	2	●
	2300 Rocket III	04 -	2	●
	2300 Rocket III Classic	07 -	2	●
	2300 Rocket III Roadster	10 -	2	●
	2300 Rocket III Touring	13 -	2	●
	2300 Rocket X	15 -	2	●
YAMAHA				
TZ	125	97 -	1	●
TZ	250 GP / A / D	90 - 95	2	●
FZR	750 R (OW01)	89 - 90	2	●

1 - 2 = Nombre de jeux avant / Number of front sets / Anzahl Sets / Numero blister / Numero des juegos
L = Gauche / Left / Links / Sinistra / Izquierda - R = Droite / Right / Rechts / Destra / Derecha

Street	Sport	Racing	Enduro	MX	Off-road Racing	ATV
S4 A3+ RX3	XBK5	C60				

2247

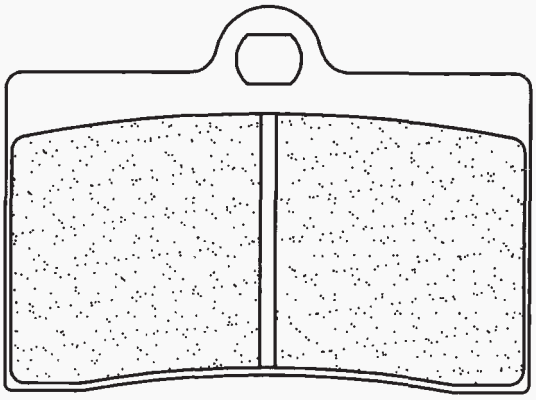

Dim. / Size

69.4 mm
50.8 mm
8 mm

APRILIA						
RS	250		95 - 96	1	●	
BETA						
	125	Jonathan	99 -	1	●	
	350	4.0 Motard	04 -	1	●	
	350	Euro	99 -	1	●	
	350	Jonathan	02 -	1	●	
	350	M4	06 -	1	●	
BIMOTA						
YB7	400		89 -	2	●	
	500	V Due	97 -	2	●	
	600	Bellaria Sport	91 -	2	●	
YB9	600	SRI	97 -	2	●	
	650	Supermono	97 -	2	●	
SB7	750		96 -	2	●	
YB4	750		89 -	2	●	
1D	851	Tesi	91 -	2	●	
	900	Mantra	97 -	2	●	
DB1	900		92 -	2	●	
DB2	900		92 -	2	●	
1D	906	Tesi	91 -	2	●	
2D	992	Tesi	04 - 06	2	●	
BORILLE						
B	500	CR	02 -	1	●	
B	500	MT	02 -	1	●	
BREMBO						
P4 34x30 Single pin (Road / Racing)				1	●	
CAGIVA						
	125	Mito	93 -	1	●	
	125	Mito EV / SP	95 -	1	●	
	125	Planet	98 - 02	1	●	
	125	Raptor	03 -	1	●	
	500	Mito	07	1	●	
	500	River	00 -	1	●	
CAGIVA						
SP	525	Mito	08 -	1	●	
	600	River	94 - 95	1	●	
CANNONDALE						
S	440	SM	03 -	1	●	
DUCATI						
	400	SS Junior	92	2	●	
	400	SS Nuda	92 -	1	●	
	502	Single	93	2	●	
	502	Supermono	93	2	●	
	600	Monster	94 - 99	1	●	
	600	Supersport	96 - 02	1	●	●
	600	Supersport	94 - 95	1	●	
	748	Biposto / SP / Strada	95 - 99	2	●	
	750	Carenara / Nuda	92 -	1	●	
	750	Monster	96 - 99	2	●	
	750	Supersport	91 - 94	2	●	
	750	Supersport	95 - 99	2	●	
	851	Strada	89	2	●	
	851	Strada	91 -	2	●	
	851	Superbike	90	2	●	
	888	Roche Replica	91 -	2	●	

DUCATI						
	888	SPO	93	2	●	
	888	SPS / SP4	92 -	2	●	
	888	SPV	92 - 94	2	●	
	888	Strada / Superbike	93	2	●	
907	900	I. E.	92	2	●	
	900	Monster IL	93 - 99	2	●	
906	900	Paso	89	2	●	
	900	SSR	92	2	●	
	900	Superlight	92 - 95	1	●	
	900	Supersport	90 - 94	2	●	
	900	Supersport	95 - 97	2	●	
	916	Biposto	94 - 97	2	●	
	916	SP / Strada / Senna	94 - 97	2	●	
GAS GAS						
SM	125		02 -	1	●	
SM	250		02 -	1	●	
SM	400	fse	03 -	1	●	
SM	450	fse	03 - 06	1	●	
SM	450	fsr	07 -	1	●	
GILERA						
	350	Saturno Bialbero	90 -	1	●	
	500	Saturno Bialbero	90 -	1	●	
	500	Saturno Piuma	90 -	1	●	
HUSQVARNA						
SM	400	R	02	1	●	
SM	450	R	03 - 04	1	●	
SM	510	R	05	1	●	
SM	570	R	01 - 05	1	●	
SM	570	R	06	1	●	
SMR	630		04 - 05	1	●	
SMR	630		06 -	1	●	
ITALJET						
	900	Griffon	00 -	1	●	
KTM						
	125	Sting	97 -	1	●	
SX	450	SM / SM Factory Replica	04 -	1	●	
	620	Duke	94 - 98	1	●	
LC4	660	SM Factory Replica	02 -	1	●	
	660	SMC	03 - 04	1	●	
LAVERDA						
	650	Ghost	96 -	2	●	
	650	Ghost Legend	97 -	2	●	
	650	Sport	92 -	2	●	
	650	Strike	97 -	2	●	
	668	Diamante	97 -	2	●	
	668	Ghost Strike	98 -	2	●	
	668		96 -	2	●	
	750	Cup	98 -	2	●	
	750	Diamante	97 -	2	●	
	750	Ghost Strike	97 -	2	●	
	750	S / S Formula / Strike	97 -	2	●	
	750	S SPORT	99 -	2	●	
TTS	800		99 -	2	●	

1 - 2 = Nombre de jeux avant / Number of front sets / Anzahl Sets / Numero blister / Numero des juegos
L = Gauche / Left / Links / Sinistra / Izquierda - R = Droite / Right / Rechts / Destra / Derecha

Street	Sport	Racing	Enduro	MX	Off-road Racing	ATV
S4 A3+ RX3	XBK5	C60				

2247 suite

MOTO GUZZI					
V7	750 Ippogrifo	97 -	2	●	
V10	1000 Centauro	97 - 99	2	●	
	1000 Daytona	91 -	2	●	
RS	1000 Daytona	97 -	2	●	
	1100 California EV (Single pin pad)	97 - 00	2	●	
	1100 California Jackal (Single pin pad)	99 - 01	2	●	
	1100 California Special (Single pin pad)	99 - 00	2	●	
	1100 Sport	94 - 99	2	●	
V11	1100 Sport	97 - 00	2	●	
	1100 Sport Corsa	98 - 99	2	●	
MZ / MUZ					
	660 Mastiff 17"	99 - 05	1	●	
	660 Skorpion Replica	95 - 01	1	●	
	660 Skorpion Sport / Cup	95 - 01	1	●	
	660 Skorpion Tour / Traveller	95 - 02	1	●	
NORTON					
	588 F-1 (Rotary) P55 B Model	90 - 91	2	●	●
	588 F-1 (Rotary) P55 Model	90	2	●	
	588 TT	92 -	2	●	
SACHS					
XTC	125 Supersport	00 - 07	1	●	
	125 X-Road	06	1	●	
	125 X-Road	07	1	●	
	650 Roadster V1.6	01 - 04	1	●	
	650 Roadster V1.6	05 -	1	●	
	800 Roadster V2	00 -	2	●	
	805 B / S	03 - 04	2	●	
TM					
SMR	125 (2T)	05 - 10	1	●	
SM	250	02	1	●	
SMM	250 (2T)	05 - 10	1	●	
SMR	250 (2T)	05 - 08	1	●	
SME	250 (4T)	04	1	●	

TM					
SMM	300 (2T)	05 - 10	1	●	
SMR	300 (2T)	05 - 10	1	●	
SME	400 (4T)	04	1	●	
VOR					
SM	400	02 - 03	1	●	
SMR	450 FES	05 - 09	1	●	
SM	530	02 - 03	1	●	
SME	530 (4T)	04	1	●	
SMR	530 F ES	05 - 09	1	●	
SMX	660 F	04	1	●	
SM	400	00 - 02	1	●	
SM	450	02	1	●	
SM	500	00 - 02	1	●	
SM	530	02 -	1	●	
VOXAN					
	1000 Café-Racer	02 - 05	2	●	
	1000 Roadster	02 - 05	2	●	
	1000 Street Scrambler	03 - 05	2	●	
YAMAHA					
TZR	125 R (4DL1 / 4DL2) (Brembo)	91 - 93	1	●	
TZR	125 RR (4DL3) (Brembo)	94 - 95	1	●	
SZR	660	96 - 97	1	●	

1 - 2 = Nombre de jeux avant / Number of front sets / Anzahl Sets / Numero blister / Numero des juegos
L = Gauche / Left / Links / Sinistra / Izquierda - R = Droite / Right / Rechts / Destra / Derecha

Street	Sport	Racing	Enduro	MX	Off-road Racing	ATV

S4 A3+

2248

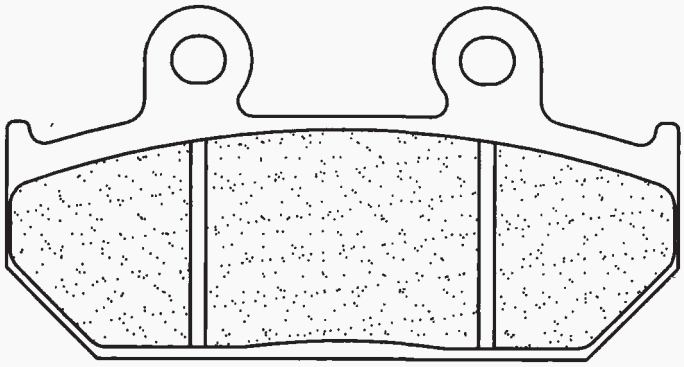

Dim. / Size
88 mm
46.1 mm
10 mm

CAGIVA						
	900	Elefant	90 - 92	1	●	
HONDA						
CB	125	TT	90	1	●	
NX	500	Dominator (Austria)	88 - 92	1	●	
VT	600	C Shadow	92	1	●	
XL	600	V Transalp	91 - 93	1	●	
XRV	650	Africa Twin	88 - 90	1	●	
NX	650	Dominator J / K	88 - 92	1	●	
GL	1500	Goldwing / SE	88 - 93	2	●	
GL	1500	Goldwing Aspencade SE	94 -	2	●	
GLX	1500		88 -	2	●	

Street	Sport	Racing	Enduro	MX	Off-road Racing	ATV
S4 A3+ RX3	XBK5	C60	EN10	MX10	X59	

2249

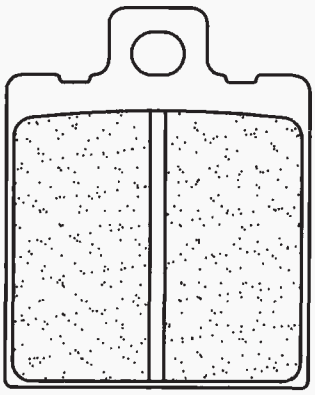

Dim. / Size
39.7 mm
50 mm
7 mm

ALFER						
MC	80		87 -	1	●	
MC	125		88			●
MC	125		87	1	●	
MC	250		88			●
GR	250	Enduro	88			●
GR	250	Enduro	85	1	●	
MC	250		85	1	●	
MC	250		87	1	●	●
GR	300	Enduro	88			●
GR	300		85	1	●	
APRILIA						
E.T.	50		85 -	1	●	●
AF 1	125		87 -			●
AF 1	125	Europa / Futura	90 - 91			●
AF 1	125	Replica / Sintesi	89 - 91			●
ETX	125		86 - 87			●
	125	Red Rose	89			●
	125	Red Rose	90 -			●
	125	Tuareg	87 -			●
APRILIA						
	125	Tuareg Rally	90 - 91			●
	125	Tuareg Rally	89			●
	125	Tuono	04 -			●
	200	Climber	93	1	●	●
MX	250	Cross	85	1	●	
RS	250		95 - 96			●
RS	250	R Piste	04 -			●
RS	250		97 - 02			●
RX	250		86 -	1	●	
	250	Tuareg Rally	86 -			●
	350	Tuareg	88 - 89			●
	350	Tuareg Wind	87			●
	350	Tuareg Wind	88			●
ETX	350		- 86			●
ETX	350		86 -			●
	350	Tuareg	86 - 87			●
ETX	600		86 -			●
	600	Tuareg	86 - 87			●
	600	Tuareg Wind	88			●
ARMSTRONG						
MX	500		86 -	1	●	
MX	600		86 -	1	●	
ASPES						
	125	Sintesi	88 -			●
ATK						
ATK	250	CC / MX	91 - 92			●
ATK	350	ES / CC / MX / STD	91 - 92			●
ATK	350	GS	93 -	1	●	●
ATK	406	CC / MX	91 - 92			●
ATK	560		86	1	●	
ATK	560		84 - 85	1	●	
ATK	560		87 - 88	1	●	
ATK	604	ES / CC / MX / STD	91 - 92			●
ATK	640		93 -	1	●	●
BENELLI						
	124	T	83 -	1	●	
	125	2CE	76 - 78	1	●	
	125	Custom	85	1	●	
	125	Jarno	89			●
E	125	LC	85	1	●	
	125	Sport		1	●	
	125	T	76 -	1	●	
	125	TT		1	●	
BX	125		89			●
BXK	125		88	1	●	
	250	2CE		1	●	
	250	Disc	76 -	1	●	
	304		83 -	1	●	
	350	Turismo (4T)		1	●	
	354	Sport	83 -	2	●	●
	354		78 - 82	2	●	
	500	4	76 -	2	●	
	500	4T	- 76	1	●	
	654	Sport	83	2	●	●
	900	Tornado 3	00 - 02			●

1 - 2 = Nombre de jeux avant / Number of front sets / Anzahl Sets / Numero blister / Numero des juegos
L = Gauche / Left / Links / Sinistra / Izquierda - R = Droite / Right / Rechts / Destra / Derecha

Street	Sport	Racing	Enduro	MX	Off-road Racing	ATV
S4 A3+ RX3	XBK5	C60	EN10	MX10	X59	

2249 suite

BENELLI						
TNT	1100		04			●
BETA						
KR	50	Twin	88	1	●	●
KR	50		86 - 87	1	●	
ALP	240		96 -			●
CR	250		83 -	1	●	
ALP	260		96 -			●
	500	GS / RV	84 -	1	●	
BILLET						
6 Piston caliper (Road / Racing)				3	●	
BIMOTA						
YB7	400		89 -			●
	500	V Due	97 -			●
YB9	600	SRI	97 -			●
	650	Supermono	97 -			●
SB7	750		96 -			●
YB4	750		89 -			●
	900	Mantra	97 -			●
DB4	900		99 -			●
2D	992	Tesi	04 - 06			●
SB8K	996	Gobert	06			●
SB8K	996	Santamonica	06			●
SB8	1000	R	98 -			●
DB10	1078	B.Motard	12 - 13			●
DB6E	1078	Delirio / Delirio R	12 -			●
3D	1078	Tesi	09 - 13			●
DB7	1098		09			●
CAGIVA						
	50	Cocis	89	1	●	●
	50	Cocis	88 -	1	●	
	50	Lucky Explorer	88 -	1	●	
	50	Prima	92	1	●	●
	50	Supercity	93 -			●
	50	Supercity	92	1	●	●
	50	W4	92	1	●	●
LR	80		83 -	1	●	
SST	80		83 -	1	●	
SXT	80		83 -	1	●	
	80	Cocis	91 -	1	●	
	80	Super City	94 -			●
	80	Super City	92 - 93	1	●	●
	80	W4	92 -	1	●	●
	125	Supercity	92 - 95			●
K7	125		91 -			●
W8	125		92 -	1	●	●
WMX	125	GP Replica	86 -	1	●	
WRX	125		83	1	●	
	125	Aletta Electra	87 -	1	●	
	125	Aletta Oro	86 -	1	●	●
	125	Blues	92 - 95			●
	125	Dakar	86	1	●	
	125	Elefant re	87 -	1	●	
	125	Enduro	86 -	1	●	
	125	Freccia	89			●
	125	Freccia C12 R	91 -			●
	125	Mito	93 -			●
	125	Mito EV / SP	95 -			●
	125	Mito Racer	91 - 92			●
	125	N1	97 -			●
	125	Planet	98 - 02			●
	125	Raptor	03 -			●
	125	Supercity	98 -			●
	200	Elefant	86 -	1	●	
MXR	250		82 -	1	●	
SST	250	Ala Verde	81 -	1	●	
WMX	250	GP	82	1	●	
	350	W 12	92 -			●
SST	350	Ala Verde	81 -	1	●	
SST	350		83 -	1	●	
SXT	350	Ala Rossa	82 -	1	●	
T4	350	E	87 -	1	●	
T4	350	R	87 -	1	●	
	350	Alazurra	85 -	1	●	●
	350	Elefant	86 -			●
MXR	400		82 -	1	●	
MXR	500		82 -	1	●	

CAGIVA						
T4	500	E	87 -	1	●	
WMX	500	Cross	87	1	●	●
WMX	500		85 - 86	1	●	
	500	Mito	07			●
	500	River	00 -			●
SP	525	Mito	08 -			●
	600	River	94 - 95			●
	650	Alazurra		1	●	●
	650	Elefant	86 -			●
	750	Elefant	88	1	●	●
	750	Lucky Explorer	88			●
DB MOTORS						
ZZ	50	Pirat	00 -	1	●	●
	50	Sport	00 -	1	●	●
DERBI						
	125	Mulhacén	07			●
	250	RC	85	1	●	
DUCATI						
	350		75 -	1	●	
	350	F3	86 -	2	●	●
	350	GTV	77	1	●	●
	350	Indiana	86 -			●
	350	Paso	86	2	●	●
	350	Sport	77 -	2	●	●
	400	Monster (Japan)	02 -			●
	400	SS Junior	92			●
	400	SS Nuda	92 -			●
	500	GTV	77 -	2	●	●
	500	Pantah	85 -			●
	500	Sport Desmo	77 -	2	●	
	500	Twin GTL	75 -	1	●	
	502	Single	93			●
	502	Supermono	93			●
	600	Monster	94 - 99			●
	600	Monster	00 - 01			●
	600	Pantah TL / SL	81			●
	600	Supersport	94 - 95			●
	620	Monster	05 - 06			●
	620	Monster Dark	06 -			●
	620	Monster Dark i.e	02 - 05			●
	620	Monster i.e	02 - 05			●
	620	Monster si.e	02 - 05			●
	650	Indiana	86 -			●
	695	Monster	06 -			●
	748	/ S	99 - 03			●
	748	Biposto / SP / Strada	95 - 99			●
	748	R	00			●
	748	R	01 - 03			●
	748	SPS	98 - 99			●
	750	Carenara / Nuda	92 -			●
	750	Indiana	87 - 90			●
	750	Monster	96 - 99			●
	750	Monster / Monster i.e	00 - 02			●
	750	Paso	87			●
	750	Paso	88	2	●	●
	750	Paso	86	2	●	●
	750	Supersport	95 - 99			●
	800	Monster i.e / si.e	03 - 05			●
	800	Monster S2R	05 - 07			●
	800	Monster S2R Dark	05 - 06			●
	851	Strada	89			●
	851	Superbike	90			●
	888	SPO	93			●
	888	SPS / SP4	92 -			●
	888	SPV	92 - 94			●
	888	Strada / Superbike	93			●
907	900	I. E.	92			●
	900	Monster IL	93 - 99			●
906	900	Paso	89			●
	900	SSR	92			●
	900	Superlight	92 - 95			●
	900	Supersport	95 - 97			●
	916	Biposto	94 - 97			●
	916	Monster S4	01 - 03			●
	916	SP / Strada / Senna	94 - 97			●
	916	SPS	97 - 98			●

1 - 2 = Nombre de jeux avant / Number of front sets / Anzahl Sets / Numero blister / Numero des juegos
L = Gauche / Left / Links / Sinistra / Izquierda - R = Droite / Right / Rechts / Destra / Derecha

Street	Sport	Racing	Enduro	MX	Off-road Racing	ATV
S4 A3+ RX3	XBK5	C60	EN10	MX10	X59	

2249 suite

DUCATI						
	996	Monster S4R	04 - 05	2		●
	996	R	01	2		●
	996	SPS	99 - 01	2		●
	998	/ S	02 - 03	2		●
	998	R	02	2		●
	1000	Monster Dark i.e / si.e	03 - 05	2		●
	1000	Monster i.e / si.e	03 - 05	2		●
	1000	Supersport DS	03 -	2		●
FANTIC						
XM	50	Caballero	98 -	1	●	●
RC	50	Caballero	91 -	1	●	●
RS	50	Caballero	91 -	1	●	●
	50	Koala	88 -	1	●	●
	125	Cruiser	98 -	1	●	
	250	Coach	91 -	1	●	
GARELLI						
	40	Urka	91 -	1	●	
	50	Ciclone LC	86	1	●	
	50	Tiger XLE	86 -	1	●	●
GTA	125		83 - 85	2	●	●
GILERA						
RC	50	Top Rally	90	1	●	●
RI	50		91 -	1	●	
RK	50		96 -	1	●	●
	50	Rally	87 -	1	●	
	50	Sioux	92	1	●	●
MXR	125		90			●
RX	125	Arizona Hawk	86 -	1	●	
RX	125		83	1	●	
SP	125	01	90 -			●
XR2	125		90			●
	125	Crono	92 -			●
	125	CX	91 -			●
	125	Fast Bike	88 -			●
	125	Freestyle	92 -			●
	125	HX / HE	83	1	●	
	125	KK / KR / KZ	86 -			●
	125	MX1 / MXR	89 -			●
	125	R1 / R1S	90 -			●
	125	SP 01	90			●
	125	SP 02	90 -			●
RV	200		85 - 86			●
RX	200		83	1	●	
	200	Fast Bike	87 -			●
NGR	250		85 -			●
	250	Arizona Hawk	86 -	1	●	
	250	Arizona Rally	86 -	1	●	
XRT	350		90 -			●
	350	Saturno Bialbero	90 -			●
	500	Saturno Bialbero	90 -			●
	500	Saturno Piuma	90 -			●
RC	600		88			●
XRT	600		89			●
	600	Nordwest	91 -			●
HERCULES						
ZX	50		86 -	1	●	
HONDA						
CRM	125	/ R	90 - 98			●
NSR	125	F / R	90 - 92			●
NSR	125	R (Italy)	89 -			●
HUSQVARNA						
CR	125		85 - 90	1	●	
CX	125		84 - 85	1	●	
CR	240		84 - 85	1	●	
CR	250		85 - 87	1	●	
XC	250		- 85	1	●	
WR	400	Enduro	85 -	1	●	
	430	Enduro	85 -	1	●	
CR	500		- 85	1	●	
CR	500		86 -	1	●	
XC	500		- 85	1	●	
TC	500		86 -	1	●	
WR	504		83 -	1	●	
TE	510		86 - 87	1	●	
TE	510		87 - 91	1	●	

ISR						
2 Piston caliper (22-027/028/029) (Road / Racing)				2	●	
ITALJET						
	350	Road master	83 -	2	●	
	900	Griffon	00 -			●
KEEWAY						
	125	Enduro	07 -			●
	125	X-Ray	07 -			●
KTM						
GXE	50		87 -	1	●	
GXE	50		89 -	1	●	
GXR	50		89 -	1	●	
MX	50		91	1	●	
MX	50		87 - 91	1	●	
RSV	50		86 -	1	●	
MX	80		86 - 92	1	●	
	80	PL/RSL/ L/ RS/ RL/ Chopper	80 -	1	●	●
MX	85		90	1	●	
LC	125		85	1	●	
LC	125		86 -	1	●	●
MX	125		85	1	●	
MX	125		86	1	●	●
XC	125		86 -	1	●	●
XC	125		85	1	●	
	125	Baja	86 -	1	●	
LC	250		85	1	●	
LC	250		86	1	●	●
MC	250		83 - 84	1	●	●
MX	250		85	1	●	
MX	250		83 - 84	1	●	●
MX	250		86	1	●	●
XC	250		86 - 89	1	●	●
XC	250		85	1	●	
	250	Baja	86 -	1	●	
XC	300		86 - 90	1	●	●
XC	300		85	1	●	
	300	Baja	86 -	1	●	
GS	350	500 K4	- 83	1	●	
GS	350		83 - 86	1	●	
XC	350	/ MC	- 83	1	●	
	350	Country Cross	85 -	1	●	
GS	390		83 -	1	●	
XC	390	/ MC	- 83	1	●	
XC	420	/ MC	- 83	1	●	
MC	495	Leleu	82 - 83	1	●	
MX	495	Leleu	82 - 83	1	●	
GS	500	500K4 Enduro	83 -	1	●	
LC	500		85	1	●	
LC	500		86 -	1	●	●
MX	500		85	1	●	
MX	500		86	1	●	●
XC	500	/ MC	- 83	1	●	
	500	Baja	86 -	1	●	
	550	Baja	86 -	1	●	
GS	600		85	1	●	
XC	600	Cross / XCE Cross	85	1	●	
XCE	600		85	1	●	
	600	Enduro (4T)	84 -	1	●	
	620	Duke	94 - 98			●
LAVERDA						
OR	50	Atlas	86	1	●	●
OR	50	Atlas	90 -	1	●	●
	50	Gaucho	92	1	●	●
	125	Custom	86 -	1	●	
CU	125	Ride	86 -	1	●	
LB	125	Uno	85 -	1	●	
PF	350	Alpino		2	●	●
RS	350	Alpino		2	●	●
GS	350	Lesmo	86 -	2	●	●
	500	Alpino / S	77 -	2	●	●
OR	600	Atlas	86 -			●
	650	Ghost	96 -			●
	650	Ghost Legend	97 -			●
	650	Sport	92 -			●
	650	Strike	97 -			●
	668	Diamante	97 -			●
	668	Ghost Strike	98 -			●

1 - 2 = Nombre de jeux avant / Number of front sets / Anzahl Sets / Numero blister / Numero des juegos
L = Gauche / Left / Links / Sinistra / Izquierda - R = Droite / Right / Rechts / Destra / Derecha

Street	Sport	Racing	Enduro	MX	Off-road Racing	ATV
S4 A3+ RX3	XBK5	C60	EN10	MX10	X59	

2249 suite

LAVERDA						
	668	96 -				●
	750 Cup	98 -				●
	750 Diamante	97 -				●
	750 Ghost Strike	97 -				●
	750 S / S Formula / Strike	97 -				●
	750 S SPORT	99 -				●
MAICO						
GM	250 LC	85 -	1		●	
MD	250	83 -	1		●	●
GM	500 LC	85 -	1		●	
MALAGUTI						
	50 Enduro	85 -	1		●	
MRX	50	89	1		●	
MONTESA						
	260 Evasion	92				●
	309 Cota	89 -				●
	310 Cota	89 -				●
	311 Cota Trial	92				●
MOTO GUZZI						
	125 BX	92	1		●	●
	125 Custom	85	1		●	
	125 Enduro TT	85	1		●	
	240 / 4	77 -	1		●	
	250 TS	75 - 76	1		●	
V35	350 C					●
	350 Falco	88	1		●	●
V35	350 Florida					●
V35	350 GT	90 -				●
V35	350 GT		1		●	
V35	350 II / Imola / Imola II	77	2		●	●
	350 Imola	78 -	2		●	●
	350 Nevada	92 -	2		●	●
	350	77 -	2		●	●
NTX	350	88	1		●	●
NTX	350	90 -	1		●	
	400	79 -	2		●	●
V50	500 1/2/3/ Monza / Chopper	77	2		●	●
	500 Monza	78 -	2		●	●
	500	77 -	2		●	●
V65	650 Lario	86 -	2		●	●
V65	650 NTX	87 -	1		●	●
GT	650 Sessantacinque	89	2		●	●
V65	650 SP / Chopper		2		●	●
V65	650 TT	86 -	2		●	●
	650	80 -	2		●	●
NTX	650	90 -	1		●	
V7	750 Ippogrifo	97 -				●
	750 Nevada	91 - 92	2		●	●
	750 Nevada Club	98 - 01	2		●	
	750 Targa	89	2		●	●
NTX	750	89	1		●	●
V10	1000 Centauro	97 - 99				●
RS	1000 Daytona	97 -				●
	1000 Quota	92 - 97				●
	1100 California EV (Single pin pad)	97 - 00				●
V11	1100 Lemans (All models)	01 - 04				●
V11	1100 Scura / Sport Scura	02 -				●
	1100 Sport	94 - 99				●
V11	1100 Sport	97 - 00				●
V11	1100 Sport (All models)	01 -				●
	1100 Sport Corsa	98 - 99				●
MOTO MORINI						
	350 Coguaro / New York	90 -				●
	350 Dart	88				●
RLX	350 Excalibur	90 -				●
	350 Indiana	88				●
	350 Kanguro	87				●
	400 Dart	89				●
	400 S		2		●	●
	501 Camel	88				●
	501 Coguaro	89				●
	501 Excalibur	89				●
RLX	501 Excalibur	90 -				●
	501 New York	89				●
	650 Indiana	88				●
	750 Indiana	88				●

MZ / MUZ						
	660 Mastiff 17"	99 - 05				●
	660 Skorpion Replica	95 - 01				●
	660 Skorpion Sport / Cup	95 - 01				●
	660 Skorpion Tour / Traveller	95 - 02				●
NORTON						
	588 F-1 (Rotary) P55 Model	90				●
SANGLAS						
	400 Y	79 - 80	2		●	●
	500 S2	79 - 80	2		●	●
SIMSON						
SR	80 2 CE		1		●	
	80 IFA	89	1		●	
S	83 CX		1		●	
S	83 OR		1		●	
SWM						
	125 GP	86 -	1		●	●
	125 S1 - S2		1		●	
	250 Explorer	86	1		●	●
	250 Pioner	86	1		●	●
	250 S1 - S2		1		●	
TRL	329 MJ	86 -	1		●	
TM						
SMM	125 Black Dream (2T)	08 - 10				●
SMM	125 Black Dream (Rim brake)	04 - 07				●
SMM	250 (2T)	05 - 10				●
SMM	300 (2T)	05 - 10				●
SMM	400 (4T) (Rim brake)	04				●
SMM	450 F Black Dream ES	08 - 10				●
SMM	530 F Black Dream (Rim brake)	04 - 07				●
SMM	530 F Black Dream ES	08 - 10				●
VOXAN						
	1000 Charade Racing	06				●
YAMAHA						
TDR	125 R (3SH2/3XE2) Lightburner	93 - 94				●
TZR	125 R (4DL1 / 4DL2) (Brembo)	91 - 93				●
TZR	125 R (4FL)	97 - 98				●
TZR	125 RR (4DL3) (Brembo)	94 - 95				●
SZR	660	96 - 97				●

1 - 2 = Nombre de jeux avant / Number of front sets / Anzahl Sets / Numero blister / Numero des juegos
L = Gauche / Left / Links / Sinistra / Izquierda - R = Droite / Right / Rechts / Destra / Derecha

Street	Sport	Racing	Enduro	MX	Off-road Racing	ATV

S4 A3+ XBK5 C60

2251

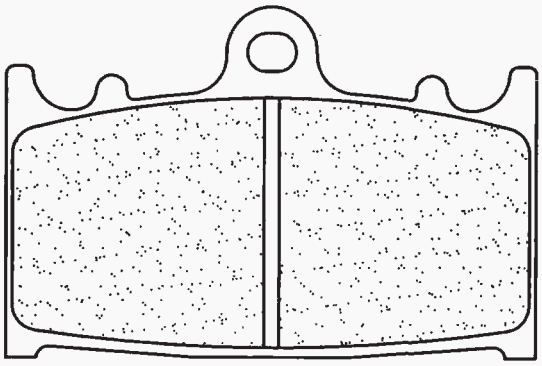

Dim. / Size

69.7 mm
46.3 mm
8 mm

BERINGER						
4 Piston caliper (Road / Racing)				1	●	
HUSABERG						
FS	400	e / c SM	01 - 03	1	●	
FS	450	e / c SM	04 -	1	●	
FS	650	e / c SM	01 -	1	●	
KAWASAKI						
KR1	250	S	90	2	●	
ZX-4	400		90	2	●	
ZXR	400		89 - 90	2	●	
ZZR	400		90 - 94	2	●	
ZZR	500	(Austria)	90 - 92	2	●	
ZZR	500	(Austria)	93 -	2	●	
GPZ	500		93 - 95	1	●	
ZX6-R	600	D1-D4	90 - 93	2	●	
ZX6-R	600	E1-E5 Ninja	93 - 97	2	●	
ZX6-R	600	Ninja F1 / F2	95 - 97	2	●	
EN	600	R Ninja	89 -	2	●	
ZZR	600		90 - 92	2	●	
ZZR	600		93 - 95	2	●	
ZX7-R	750	Ninja	89 - 95	2	●	
ZXR	750	R	93 - 95	2	●	
ZXR	750	R	89 - 92	2	●	
ZX9-R	900	Ninja	94 - 95	2	●	
GPZ	900	R	90 -	2	●	
KLZ	1000	Versys	12 -	2	●	
KLZ	1000	Versys LT / Tourer / Grand Tourer	15 -	2	●	
ZX	1100	D1-D4 ZX 11	93 - 97	2	●	
ZR	1100	Zephyr	92 - 96	2	●	
ZZR	1100		90 - 93	2	●	
ZZR	1100		94 - 01	2	●	
ZZR	1200		02 -	2	●	
VN	1700	Voyager	09 -	2	●	
VN	1700	Classic Tourer (ABS)	10 - 14	2	●	
VN	2000	/ Vulcan	04 -	2	●	
SUZUKI						
RG	125	F Gamma	92 - 96	1	●	
RG	200	Gamma	91 -	1	●	
RGV	250	Gamma J	88	2	●	
SUZUKI						
RGV	250	Gamma K / L	89 - 90	2	●	
RGV	250	Gamma M / N / P / R / S	91 - 95	2	●	
TV	250	J / K / AK / L / Wolf	88 - 90	1	●	
GSX-R	250	R	89 -	2	●	
GSX	250	S Cobra	89 -	1	●	
SG	350	N Goose	92 -	1	●	
GSF	400	Bandit (GK75A) K/NK/Z/VM/ZM/P	89 - 94	2	●	
GSF	400	Bandit (GK7AA) S/VS/V-V/VZ-V	95 - 97	2	●	
GSX-R	400	J/RR/RAK (GK73A)	88 - 90	2	●	
GSR	400	K6	06 -	2	●	
GSX	400	SSN Katana (GK77A)	92 -	2	●	
GSR	600	K6 / K7 / K8	06 -	2	●	
GSX-R	600	V/W/X/Y/K1/K2/K3	97 - 03	2	●	
GSF	650	Bandit / Bandit S	07 -	2	●	
GSF	650	Bandit ABS / Bandit S ABS	07 -	2	●	
GSX	650	F	08 -	2	●	
GSX-R	750	Y / K1 / K2 / K3	00 - 03	2	●	
TL	1000	S	97 - 01	2	●	
SV	1000	S / N K3-K7	03 - 07	2	●	
GSF	1200	S / N Bandit ABS K6	06	2	●	
GSF	1200	S / N Bandit K6	06	2	●	
GSX	1250	FA Traveller	10 -	2	●	
GSF	1250	S / N Bandit (K7/K8/K9/L0)	07 - 10	2	●	
GSF	1250	S / N Bandit ABS (K7/K8/K9/L0)	07 - 10	2	●	

Street	Sport	Racing	Enduro	MX	Off-road Racing	ATV

S4 A3+ RX3 XBK5 C60

2252

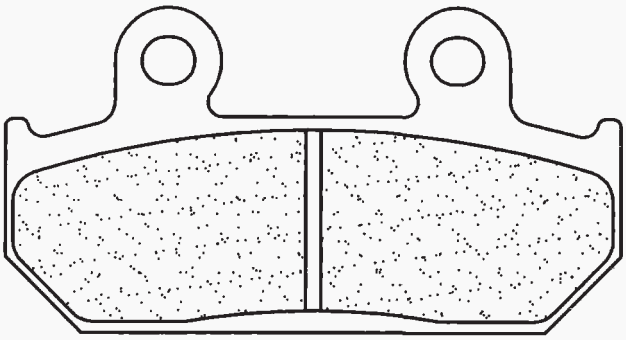

Dim. / Size

81 mm
42.2 mm
8.5 mm

HONDA						
VT	250	F	88 - 90	1	●	
CBR	250	F	86 -	2	●	
CBR	250	Hurricane	87 -	2	●	
NSR	250	R	87 -	2	●	
VTR	250		90	1	●	
VTZ	250		88 -	1	●	
CB	350	S. G.	87 - 90	2	●	
NX	350		92 -	1	●	
CBR	400	F	92 -	2	●	
CB	400	N	86 -	1	●	
CBR	400	R	87	2	●	
VFR	400	R NC21 / NC21 Z	86 -	2	●	●
VFR	400	R NC24	87 -	2	●	
CB	450	S	86 -	2	●	
CBR	500	F (Austria)	87 - 90	2	●	
VT	600	C Shadow	89 - 91	1	●	
CBR	600	F Hurricane	87 - 90	2	●	
CBR	600	F2 / F2 Supersport	91 - 94	2	●	
NTV	600	Revere	88 -	1	●	
XRV	750	Africa Twin	90 - 92	1	●	

1 - 2 = Nombre de jeux avant / Number of front sets / Anzahl Sets / Numero blister / Numero des juegos
L = Gauche / Left / Links / Sinistra / Izquierda - R = Droite / Right / Rechts / Destra / Derecha

Street	Sport	Racing	Enduro	MX	Off-road Racing	ATV

A3+

2253

Dim. / Size

74.9 mm
54 mm
8.5 mm

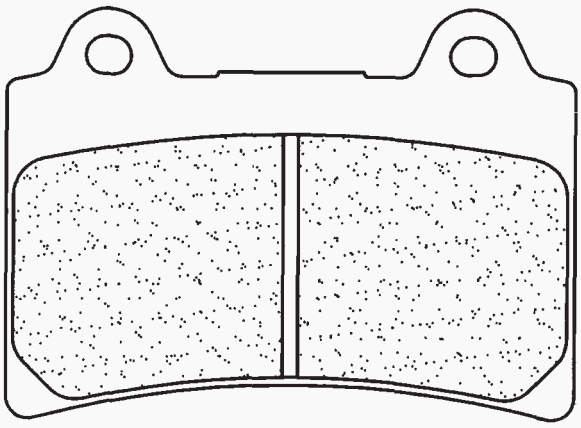

YAMAHA				
XVZ	1300 A Royal Star / Tour Classic	96 - 01	2	●
XVZ	1300 Venture Royale	90 - 95	2	●
XVZ	1300 Venture Royale	86 - 89	2	●

Street	Sport	Racing	Enduro	MX	Off-road Racing	ATV

A3+ XBK5

2254

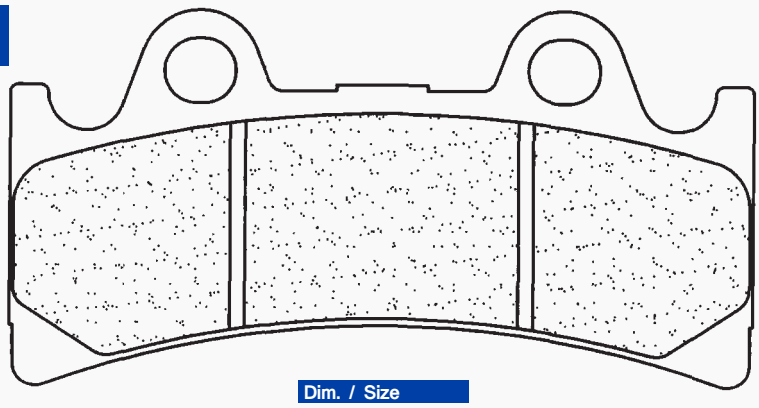

Dim. / Size

98.7 mm
49.6 mm
9.5 mm

TRIUMPH				
	900 Daytona Super III	94 - 97	2	●
YAMAHA				
YZF	750 R / SP	93 - 97	2	●
FZR	1000 EXUP	94 - 95	2	●

Street	Sport	Racing	Enduro	MX	Off-road Racing	ATV

A3+ XBK5 C60

2255

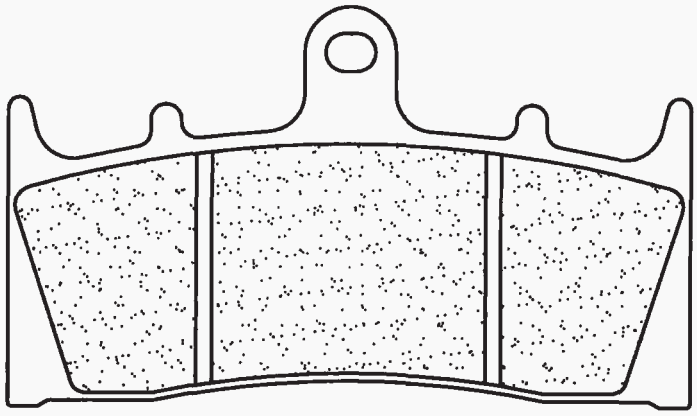

Dim. / Size

89.5 mm
52.4 mm
8 mm

KAWASAKI				
ZX6-R	600 Ninja (ZX600G)	98 - 02	2	●
ZX6-R	636 Ninja	02	2	●
ZX7-R	750 Ninja	96 - 02	2	●
ZX9-R	900 Ninja / C Ninja	96 - 01	2	●
ZRX	1100	96 - 00	2	●
ZRX	1200 / S / R	01 - 08	2	●
ZX12-R	1200 Ninja	00 - 03	2	●
VN	1500 Mean Streak	02 - 03	2	●
VN	1600 Mean Streak	04	2	●
SUZUKI				
GSX-R	750 T / V / W / X	96 - 99	2	●
GSX-R	750 WR / WS	94 - 95	2	●
GSX-R	1000 K1 / K2	01 - 02	2	●
TL	1000 R	98 - 02	2	●
GSX-R	1100 WP / WR / WS / WT (GV75A)	93 - 97	2	●
GSF	1200 S / N Bandit K1-K5	01 - 05	2	●
GS	1200 SS (GV78A)	01	2	●
GSX-R	1300 Hayabusa	99 - 07	2	●
GSX	1400	01 - 07	2	●
VZ	1600 Marauder	04	2	●

1 - 2 = Nombre de jeux avant / Number of front sets / Anzahl Sets / Numero blister / Numero des juegos
L = Gauche / Left / Links / Sinistra / Izquierda - R = Droite / Right / Rechts / Destra / Derecha

Street	Sport	Racing	Enduro	MX	Off-road Racing	ATV
S4 A3+	XBK5	C60				

2256

Dim. / Size

102 mm
40 mm
8.1 mm

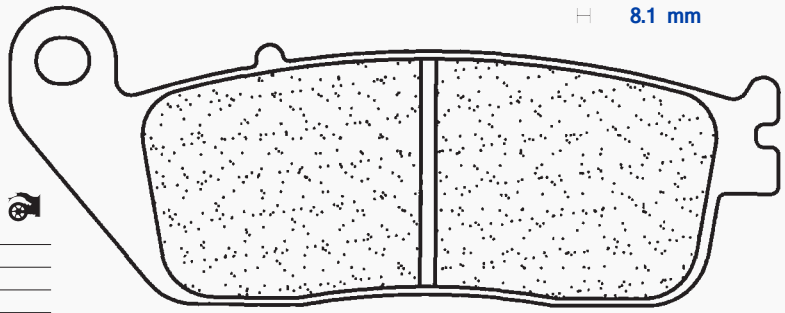

BUELL					
	500	Blast	01 -	1	●
CAGIVA					
	900	Gran Canyon	99 -	2	●
	1000	Navigator	00 -	2	●
HONDA					
RS	125	R	91 - 94	1	●
XLR	125	R	98 -	1	●
	250	Steed	93 -	1	●
CB	250		92 - 05	1	●
CBR	250	Nighthawk	92 -	1	●
CBR	250	R	11 -	1	●
CBR	250	R / RR	90	2	●
CBR	250	RJ	88	2	●
VT	250	Spada	89	1	●
CBR	300	F	14 -	1	●
CBR	300	R	14 -	1	●
CB-1	400	(CB 400 F)	89 - 90	1	●
CBR	400	R	88 - 93	2	●
CBR	400	RR	87 -	2	●
NV	400	Steed	92 - 93	1	●
CB	500		94 - 96	1	●
CBF	500		04 -	1	●
VT	600	C Shadow	93 -	1	●
VT	600	CD Shadow VLX	94 -	2	●
CBR	600	F	11 -	2	●
CB	600	F Hornet	98 - 06	2	●
CB	600	F Hornet S	00 - 06	2	●
CBR	600	F3	95 - 98	2	●
CB	600	Hornet	07 -	2	●
CB	600	Hornet Wakizashi	06	2	●
CBF	600	N / S - ABS	04 - 07	2	●
	600	Steed	92 -	1	●
CB	650	F ABS	14 -	2	●
CBR	650	F ABS	14 -	2	●
NT	650	Hawk GT	88 - 91	1	●
NTV	650	Revere	88 - 93	1	●
FMX	650		05 -	1	●
VFR	700	F Interceptor	88 - 89	2	●
NM4	700	Vultus ABS DCT	14 -	1	●
VFR	750	F	88 - 89	2	●
VFR	750	F	90 - 98	2	●
CB	750	N / F Seven Fifty	92 -	2	●
CB	750	Nighthawk	91 -	2	●
PC	800	Pacific Coast	89 - 97	2	●
VFR	950	F / Carat	92 -	2	●
CBR	1000	F	89 - 92	2	●
CBF	1000		06 - 09	2	●
CBF	1000		10 -	2	●
VFR	1000		89	2	●
VT	1100	C Shadow	94 - 96	2	●
VT	1100	C2 Shadow	95 -	2	●
VT	1100	C3 Shadow	98 -	1	●
ST	1100	Pan European	90 - 02	2	●
ST	1100	Pan European ABS-TCS	92 - 95	2	●
VT	1100	T Shadow	98 -	1	●
VTX	1300	C / S	03 -	1	●
GL	1500	F6C Custom / C Valkyrie	96 - 02	2	●
HYOSUNG					
	125	V2	99 -	1	●
KAWASAKI					
KLE	300	Versys X / Urban / Adventure	17 -	1	●
Z	650	ABS / NON-ABS	17 -	2	●
	650	Ninja	17 -	2	●
Z	750	/ ABS	07 -	2	●
Z	800	E	13 - 16	2	●
KYMCO					
	250	Venox	00 - 10	1	●
MASH					
	400	Five Hundred	15 -	1	●
	400	Scrambler	15 -	1	●
	400	Von Dutch	15 -	1	●

SUZUKI					
GW	250	Inazuma	12 -	1	●
GSX	400	R/S/T/ZR/ZS/ZT (GK79A) Impulse S	94 - 96	2	●
RF	400	RP/RR/VR/RT/RVT/RV-V (GK78A)	93 - 97	2	●
RF	600	R (GN67A)	93 - 97	2	●
GSF	600	S / N Bandit	95 - 99	2	●
C	1500	T Intruder	13 -	1	●
TRIUMPH					
	675	Street Triple	07 -	2	●
	765	Street Triple S	17 -	2	●
	800	Bonneville	01 - 06	1	●
	800	Bonneville America	02 - 06	1	●
	800	Bonneville T100	02 - 04	1	●
	800	Speedmaster	03 - 04	2	●
	800	Tiger	11 - 14	2	●
	800	Tiger XC	11 - 14	2	●
	800	Tiger XC / XCx / XCa	15 -	2	●
	800	Tiger XR / XRx / XRt	15 -	2	●
	865	Bonneville America	10 - 13	1	●
	865	Bonneville America	14 -	1	●
	865	Bonneville Newchurch	15 -	1	●
	865	Bonneville Spirit	15 -	1	●
	865	Bonneville T100	05 - 09	1	●
	865	Bonneville T100	10 - 13	1	●
	865	Bonneville T214	15 -	1	●
	865	Scrambler	06 - 13	1	●
	865	Speedmaster	05 - 10	2	●
	900	Adventurer	96 -	1	●
	900	Bonneville T100	17 -	1	●
	900	Legend TT	98 - 01	2	●
	900	Street Cup	17 -	1	●
	900	Street Scrambler	17 -	1	●
	900	Thruxton	04 -	1	●
	900	Thruxton Ace	15 -	1	●
	900	Thunderbird	95 - 03	1	●
	900	Thunderbird Sport	98 - 04	2	●
	900	Tiger	99 - 00	2	●
	955	Tiger (From VIN 198875)	04 - 06	2	●
	955	Tiger (Up to VIN 198874)	00 - 04	2	●
	1200	Bonneville Bobber	17 -	1	●
	1200	Bonneville T120	16 -	2	●
	1200	Thruxton	16 -	2	●
VOXAN					
	1000	Scrambler	06 -	2	●
YAMAHA					
WR	125	R	09 -	1	●
WR	125	X Supermotard	09 -	1	●
WR	250	X Supermotard	08 -	1	●

1 - 2 = Nombre de jeux avant / Number of front sets / Anzahl Sets / Numero blister / Numero des juegos
L = Gauche / Left / Links / Sinistra / Izquierda - R = Droite / Right / Rechts / Destra / Derecha

Street	Sport	Racing	Enduro	MX	Off-road Racing	ATV

A3+ RX3

2257

Dim. / Size
125.4 mm
45.8 mm
8.5 mm

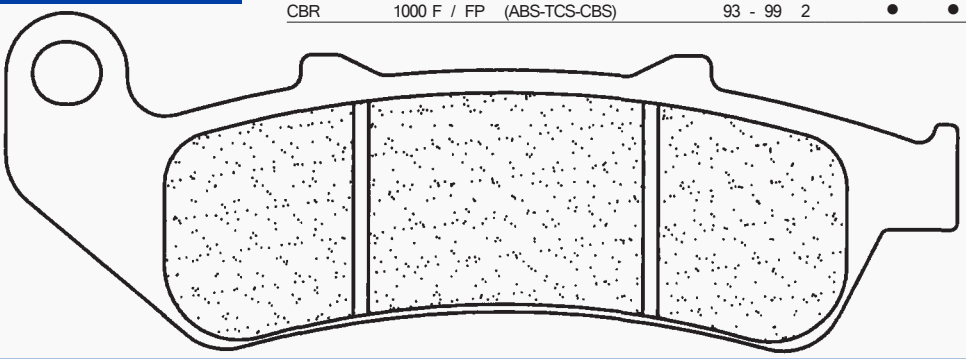

HONDA					
CBR	1000 F / FP (ABS-TCS-CBS)	93 - 99	2	●	●

Street	Sport	Racing	Enduro	MX	Off-road Racing	ATV

A3+

2258

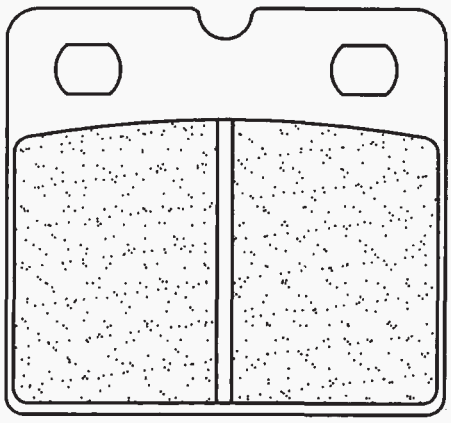

Dim. / Size
57.6 mm
53.3 mm
8 mm

BMW				
K75	750 RT (ABS)	91 -	2	●
K75	750 S	09/88 -	1	●
K75	750	09/88 -	1	●
R80	800	85 - 8/88	1	●
R80	800 GS	85 - 08/88	1	●
R80	800 RT	08/89 -	1	●
K100	1000 LT / RS	09/88 - 90	2	●
K100	1000 LT ABS	89	2	●
R100	1000 RS	08/89 -	1	●
R100	1000 RT	08/89 - 91	1	●

Street	Sport	Racing	Enduro	MX	Off-road Racing	ATV

S4 X59

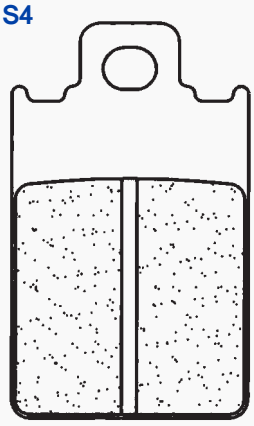

2260

Dim. / Size
31.6 mm
52 mm
5.5 mm

APRILIA				
	125 Tuareg Wind	88	1	●
	240 Climber	89 - 90	1	●
	275 Climber	89 - 90	1	●

ATK						
ATK	560		89 - 91			●
ATK	604	Quadracer	90 -			●
ATK	604		91 -			●
BETA						
MX	50	Enduro	92	1	●	
ALP	50		91 -			●
TR	125	34	88			●
TR	260	34	86 - 88			●
CAGIVA						
	50	Prima	93 -			●
	80	Prima	92 -			●
DERBI						
	75	GPR	89	1	●	
	75	GPR Sport		1	●	
FANTIC						
	50	Oasis	90 -	1	●	
	75	Oasis	89 -	1	●	
GARELLI						
	50	Sahel	91 -	1	●	
MALAGUTI						
MLX	50	Enduro	87 -	1	●	
MDX	50	Gold Enduro	87 -	1	●	

Street	Sport	Racing	Enduro	MX	Off-road Racing	ATV

RX3

2269

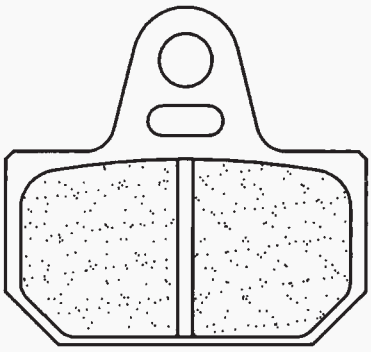

Dim. / Size
47.5 mm
44.5 mm
7 mm

YAMAHA			
TZ	125	97 -	●
TZ	250	97 -	●
TZ	250 GP / A / D	90 - 95	●

1 - 2 = Nombre de jeux avant / Number of front sets / Anzahl Sets / Numero blister / Numero des juegos
L = Gauche / Left / Links / Sinistra / Izquierda - R = Droite / Right / Rechts / Destra / Derecha

Street	Sport	Racing	Enduro	MX	Off-road Racing	ATV

A3+ RX3

2280

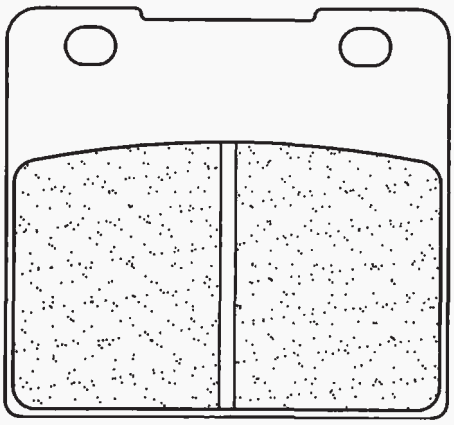

Dim. / Size

57.9 mm
53.5 mm
8.5 mm

KAWASAKI					
Z	1100 ST	81 -			●
SUZUKI					
GSX	250 RCH / H (GJ72A)	87	2	●	
GSX-R	250	88 - 89	2	●	
GSX	400 X/XA/XS Impulse	86 -	2	●	
GSX-R	400 H	87	2	●	
GSX-R	400 R3 (GK71F)	83 -	2	●	
RG	400 Type 1 & 2	85 - 87	2	●	
VS	400 Intruder	94 -	1	●	
RG	500 CH / R Gamma	85 - 87	2	●	
VS	600 GL Intruder	95 - 97	1	●	
GSX	650 GT	86			●
VS	700 GLFG Intruder	86 - 87	1	●	
GSX	750 SE Katana	85			●
GSX-R	750 F / G / H	85 - 87	2	●	
VS	750 GLF/GLFG/GLPP Intruder (VR51A)	85 - 91	2	●	
VS	800 Intruder GLN-GLX (VS52A)	91 - 99	1	●	
GSX	1100 EFE / EFF / ESE	84 - 86	2	●	●
GSX	1100 FJ/FK/FL/FM/FN/FP/FR (GV72A)	88 - 95			●
GSX-R	1100 G / H / J (GV74B)	86 - 88	2	●	
GS	1150 EG	86 -	2	●	●
GS	1150 ES	84 -	2	●	●
GV	1400 Cavalcade (Up to F/No 103764)	86	2	●	●
VS	1400 GL Intruder (VX51L)	87 - 04	2	●	●
VL	1500 Intruder Legendary Classic	98 - 01	1	●	●

Street	Sport	Racing	Enduro	MX	Off-road Racing	ATV

A3+ RX3

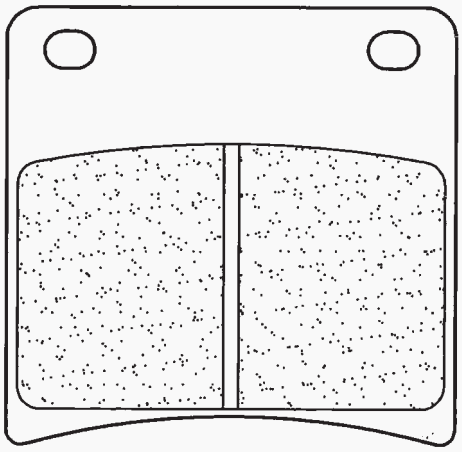

Dim. / Size

58.9 mm
57.7 mm
8 mm

SUZUKI					
GSX	400 FJ/FK/FAK/FL (GK74A)	88 - 90	2	●	
GSX-F	600 FJ (GN72A)	88	2	●	
GSX-F	600 FK/FL/FM/FN/FP/FR/FS/FT/(GN72A)	89 - 97	2	●	
GSX-F	750 FK/FL/FM/FN/FP/FR/FS/FT/(GR78A)	89 - 97	2	●	
VX	800 L / M / N / P / R	90 - 96			●
GSX	1100 FJ/FK/FL/FM/FN/FP/FR (GV72A)	88 - 95	2	●	
GSX	1100 GM / GN / GP	91 - 93			●
GV	1400 Cavalcade (From F/No 103765)	86 - 88	2	●	

2281

Street	Sport	Racing	Enduro	MX	Off-road Racing	ATV

S4 A3+ RX3

2282

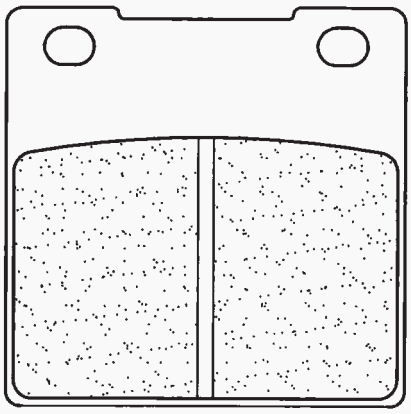

Dim. / Size

52.5 mm
52.5 mm
8.5 mm

HYOSUNG			
GT	250 Comet	02	●
GT	600 Comet	02	●
KAWASAKI			
Z	250 J / A3	81 -	●
Z	250	78 - 80	●
ZX-4	400	90	●
ZXR	400 L1 / L2 / L3 / L4 / L5	91 - 02	●
ZXR	400	89 - 90	●
EN	600 R Ninja	89 -	●
ZX7-R	750 Ninja	89 - 95	●
ZX7-R	750 Ninja	96 - 02	●
ZXR	750 R	93 - 95	●
ZXR	750 R	89 - 92	●
ZRX	1100	96 - 00	●
ZX	1100 D1-D4 ZX 11	93 - 97	●
ZZR	1100	94 - 01	●
ZRX	1200 / S / R	01 - 08	●
ZX12-R	1200 Ninja	00 - 03	●
ZX12-R	1200 Ninja (Rad.cal)	04 -	●
ZZR	1200	02 -	●
SUZUKI			
GF	250 S	88 -	●
GSF	250 Bandit	90 - 96	●
GSF	250 VS / S Bandit	97 -	●
GSX	250 F - Across	90 - 98	●

1 - 2 = Nombre de jeux avant / Number of front sets / Anzahl Sets / Numero blister / Numero des juegos
L = Gauche / Left / Links / Sinistra / Izquierda - R = Droite / Right / Rechts / Destra / Derecha

2282 suite

Street	Sport	Racing	Enduro	MX	Off-road Racing	ATV

S4 A3+ RX3

SUZUKI						
GSX	250	RCH / H (GJ72A)	87			●
GSX	250	S Cobra	89 -			●
GSX	250	S Katana	91 -			●
GSX-R	250		88 - 89			●
GSX-R	250	R	89 -			●
RG	250	Gamma	85 - 88			●
RG	250	Gamma WE	84			●
RG	250	Gamma WD	83 - 84	1	●	●
RGV	250	Gamma J	88			●
RGV	250	Gamma K / L	89 - 90			●
TV	250	J / K / AK / L / Wolf	88 - 90			●
SG	350	N Goose	92 -			●
GSF	400	Bandit (GK75A) K/NK/Z/VM/ZM/P	89 - 94			●
GSF	400	Bandit (GK7AA) S/VS/V-V/VZ-V	95 - 97			●
GSF	400	Bandit M/N/P	91 - 95			●
GSX	400	FJ/FK/FAK/FL (GK74A)	88 - 90			●
GSX	400	FSV/FSK1 (GK7B) Inazuma	00 -			●
GSX	400	FW/FWS/FWS-2	83 -	2	●	●
GSX	400	X Impulse (GK79A)	99 -			●
GSX	400	R/S/T/ZR/ZS/ZT (GK79A) Impulse S	94 - 96			●
GSX	400	SSN Katana (GK77A)	92 -			●
GSX	400	X/XA/XS Impulse	86 -			●
GSX-R	400	H	87			●
GSX-R	400	J/RR/RAK (GK73A)	88 - 90			●
GSX-R	400	R2 (GK71B)	80 -			●
GSX-R	400	R3 (GK71F)	83 -			●
GSX-R	400	RL/RM/RN/RP/RS (GK76A)	90 - 95			●
RF	400	RP/RR/VR/RT/RVT/RV-V (GK78A)	93 - 97			●
RG	400	Type 1 & 2	85 - 87			●
GS	500	E	89 - 95			●
GS	500	F	04 - 08			●
GS	500	E	96 - 03			●
GSX	500	E	83 -	2	●	●
RG	500	CH / R Gamma	85 - 87			●
GS	550	ED / ESD / LD	83 -	1	●	●

SUZUKI						
GSX	550	ESD/ESE/EFE/EFF/ESH/EFG (GN71D)	83 - 87	2	●	●
GSF	600	S / N Bandit	00 - 04	L		●
GSF	600	S / N Bandit	95 - 99			●
GSX-F	600	FJ (GN72A)	88			●
GSX-F	600	FK/FL/FM/FN/FP/FR/FS/FT/(GN72A)	89 - 97			●
GSX-F	600	FW/FX/FY/FK1 to FK6	98 - 06	L		●
GSX-R	600	V/W/X/Y/K1/K2/K3	97 - 03			●
GSX-R	600		93 - 96			●
RF	600	R (GN67A)	93 - 97			●
SV	650	N / S	99 - 02	L		●
GSX	750	SE Katana	85	2	●	
GSX	750	W/X/Y/K1 Inazuma	97 - 03	L		●
GSX-F	750	FK/FL/FM/FN/FP/FR/FS/FT/(GR78A)	89 - 97			●
GSX-F	750	FW/FX/FY/FK1 to FK6	98 - 06	L		●
GSX-R	750	J / K / L / M / WN / WP	88 - 93			●
GSX-R	750	RG	86			●
GSX-R	750	T / V / W / X	96 - 99			●
GSX-R	750	WR / WS	94 - 95			●
GSX-R	750	Y / K1 / K2 / K3	00 - 03			●
GSX-R	750	F / G / H	85 - 87			●
RF	900	RT / RV / RW	96 - 99			●
TL	1000	R	98 - 02			●
TL	1000	S	97 - 01			●
GSX	1100	G	96 -	L		●
GSX	1100	Katana	93 -			●
GSX-R	1100	G / H / J (GV74B)	86 - 88			●
GSX-R	1100	K / L / M / N (GV73B)	89 - 92			●
GSX-R	1100	WP / WR / WS / WT (GV75A)	93 - 97			●
GSF	1200	S / N Bandit	95 - 00			●
GSF	1200	S / N Bandit ABS	97 -			●
GSF	1200	S / N Bandit K1-K5	01 - 05			●
GSX	1200		98 - 01			●
GSX-R	1300	Hayabusa	99 - 07			●
GSX	1200		98 - 01			●
GSX-R	1300	Hayabusa	99 - 07			●

2283

Street	Sport	Racing	Enduro	MX	Off-road Racing	ATV

S4 A3+ RX3

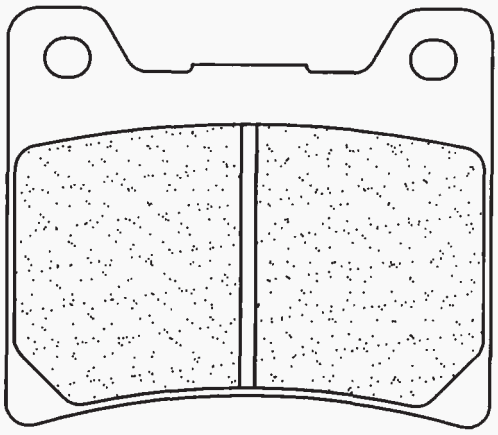

Dim. / Size

63.5 mm
54.8 mm
8.5 mm

NORTON						
	588	Commander (Rotary)	90	2	●	●
YAMAHA						
FJ	100	L / LC	84 -	1	●	●
TZR	125	(3PC2 / 3PC3)	90 - 92	1	●	
FZ	250	Fazer N / S	85 - 86	2	●	
RD	250	LC	83 -			●
RD	350	YPVS	83 - 84			●
RZ	350	L / N / NC	84 - 85			●

YAMAHA						
FZ	400	N	85	2	●	
FZR	400	Genesis (1WG)	86	2	●	
SRX	400	(1JL)	85 - 86	1	●	
XJ	400		82			●
XS	400	Z	83 -	1	●	●
RD	500	LC (RVZ500R)	84 - 86	2	●	
RD	500		83	2	●	●
RZ	500		84 - 86	2	●	
FJ	600		84 -	2	●	●
FZ	600		87 - 88	2	●	
FZR	600	/ R	90 - 95			●
FZR	600		89	2	●	●
XJ	600		83 - 91	2	●	●
YX	600	Radian	86 - 90	2	●	
YZF	600	R Thunder Cat	96 - 03			●
FZ	700		87 -	2	●	●
FZX	700	Fazer	87 -	2	●	●
XJ	700	/ Maxim	85 -	2	●	
XV	700	Virago	84 -	2	●	
FZ	750		85 - 88	2	●	●
FZ	750		89 - 91			●
FZR	750	R (OW01)	89 - 90			●
FZR	750	R Genesis	87 - 88			●
FZX	750	Fazer	86 -	2	●	●
XV	750	Virago	89 - 93	2	●	
YZF	750	R / SP	93 - 97			●
TDM	850		91 - 95			●
TDM	850		96 - 01			●
TRX	850	(Japan models) (Brembo)	96 - 99			●
TRX	850		96 - 99			●
XJ	900	/ F	83 - 93	2	●	●
XJ	900	S Diversion	94 - 03			●
FZR	1000	EXUP	89 - 90			●
FZR	1000	EXUP	91 - 93			●
FZR	1000	EXUP	94 - 95			●
FZR	1000	Genesis	87 - 89			●
GTS	1000	/ ABS	93 - 99			●

1 - 2 = Nombre de jeux avant / Number of front sets / Anzahl Sets / Numero blister / Numero des juegos
L = Gauche / Left / Links / Sinistra / Izquierda - R = Droite / Right / Rechts / Destra / Derecha

2283 suite

Street	Sport	Racing	Enduro	MX	Off-road Racing	ATV

S4 A3+ RX3

YAMAHA						
XV	1000 Virago / SE Virago	84 -	2	●		
YZF	1000 R Thunder Ace	96 - 01				●
BT	1100 Bulldog	02 - 06				●
FJ	1100	84 - 85	2	●		●
XV	1100 Virago	99				●
XV	1100 Virago	86 - 93	2	●		
XVS	1100 Dragstar / A Dragstar Classic	99 - 06				●
XVS	1100 V-Star Custom	05 -				●
FJ	1200 (3CV/CXW Type)	88 - 95				●
FJ	1200 A ABS	91 - 95				●
YAMAHA						
FJ	1200 (ITX Type)	86 - 87	2		●	●
XJR	1200 (Japan models) (Brembo Cal.)	95 - 98				●
XJR	1200 / SP	95 - 98				●
XV	1200 V-Max	85 - 92	2		●	●
XV	1200 V-Max	93 - 01				●
XVZ	1200 TD Venture Royale	85	2		●	●
XJR	1300 / SP	99 - 01				●
XJR	1300 (Japan models) (Brembo Cal.)	98 - 99				●

2284

Street	Sport	Racing	Enduro	MX	Off-road Racing	ATV

S4 A3+ RX3 MX10 X59 ATV1

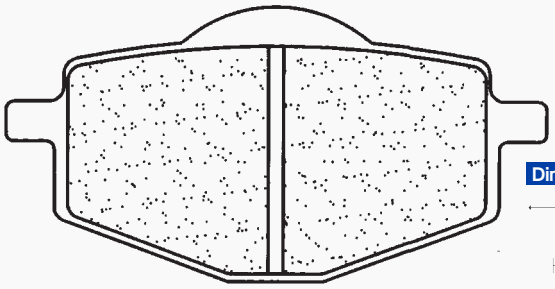

Dim. / Size
71 mm
36.2 mm
9 mm

GILERA						
	125 Apache	91 -				●
RC	125 Top Rally	90 -				●
	250 Oregon Quad	07 -	2	●		
RC	600 Top Rally	90 -				●
SACHS						
	650 Roadster V1.6	05 -				●
YAMAHA						
TDR	50	90 -	1	●		●
TZM	50 R	94 -				●
TZR	50	90 - 92				●
TZR	50	93 - 02				●
YSR	50 A / B / D / T / U / W	87 - 92	1	●		
YAMAHA						
DT	80 LC-2 (53V)	85 - 92	1		●	
RD	80 LC	83 -	1		●	
TDR	80	89	1		●	●
TZR	80	92 -				●
YSR	80	86 -	1		●	
DT	125 LC	85 - 87	1		●	
DT	125 RE	04	1		●	●
DT	125 RE	05 - 07	1		●	
DT	125 R	88 - 03	1		●	●
TDR	125 (4GW/GX1/2/3/4)	93 - 03				●
YBR	125 (3D91)	05 - 06	1		●	
YZ	125 U	88				●
DT	200 R	85 - 87	1		●	
DT	200 R	89	1		●	●
TT	200	85 -	1		●	
TT	225 S / T	87 - 00	1		●	
TT-R	225	01 - 04	1		●	
XT	225 E - H	92 - 00	1		●	
XT	225	86 - 91	1		●	
XT	225 Serrow	86 - 93	1		●	
XT	225 Serrow W	93 - 98	1		●	
TT	250	85 -	1		●	
TY-Z	250 R (Scottish)	93 - 96	1		●	
YTZ	250 TR1-Z N/S	85 - 86	1		●	●
YZ	250 U (2T)	88				●
XT	350 B-H	91 - 95	1		●	
XT	350	85 - 90	1		●	
YFM	350 Warrior XT/XU	87 - 88	2		●	
YFZ	350 Banshee (A-M)	87 - 89	2		●	
XT	400 Artesia	91 -				●
WR	500 B	91				●
TT	600 N	85 - 88	1		●	
TT	600 N	85 - 88	1		●	
XT	600 E / K	90 - 03				●
XT	600 Z Ténéré	88 - 90				●
XT	600	87 - 89				●
XTZ	660 Ténéré	91 - 98				●

2285

Street	Sport	Racing	Enduro	MX	Off-road Racing	ATV

S4 A3+ RX3

Dim. / Size
68.8 mm
43.5 mm
10 mm

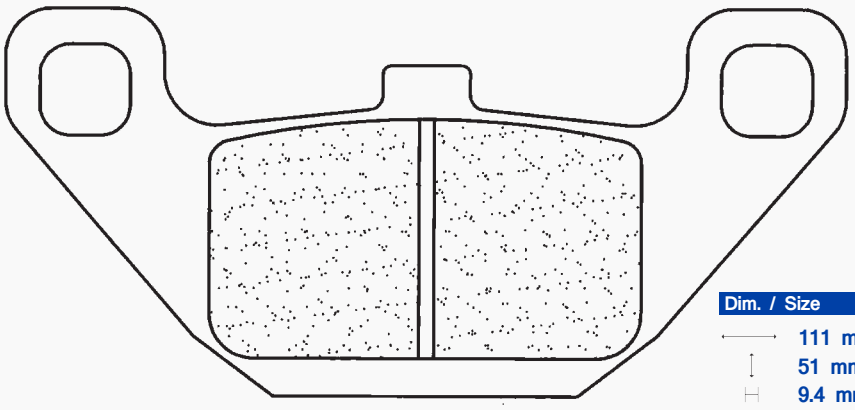

Dim. / Size
111 mm
51 mm
9.4 mm

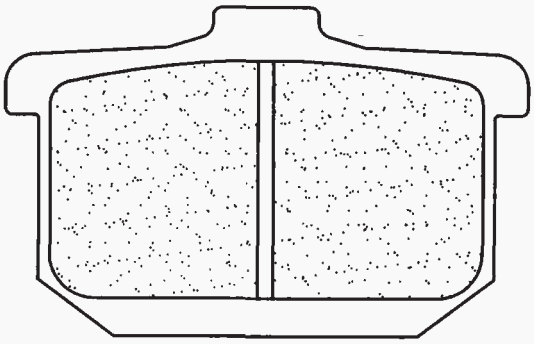

1 - 2 = Nombre de jeux avant / Number of front sets / Anzahl Sets / Numero blister / Numero des juegos
L = Gauche / Left / Links / Sinistra / Izquierda - R = Droite / Right / Rechts / Destra / Derecha

2285 suite

Street	Sport	Racing	Enduro	MX	Off-road Racing	ATV
S4	A3+	RX3				

HYOSUNG						
GA	300	98 -	1	●		
KAWASAKI						
BR	250	86 -	1	●		
CS	250	86 -	1	●		
EL	250 E3 / E4	93 - 94	1	●		
EL	250 Eliminator	88 -	1	●		
EL	250	91 - 96	1	●		
EL	250	97 -	1	●		
EX	250 R Ninja	86 - 87	1	●	●	
GPZ	250 R	86 -	1	●	●	
GPZ	250	83 -	2	●		
KR	250	- 85			●	
LX	250 Eliminator / SE	90 -	1	●		
Z	250 Eliminator	88	1	●		
EL	252 Eliminator	97 - 00	1	●		
EX	305 B1	83	1	●		
EX	305 GP	83 - 96	2	●		
EN	400 Twin	85 -	1	●		
EN	400 Vulcan	90 -	1	●		
FX	400 R	86 - 88			●	
GPZ	400	85 - 87			●	
Z	400 Eliminator	88	1	●	●	
ZX	400	85			●	
ZX	400	86 -	2	●	●	
	400 Eliminator	94 -			●	
EN	450 A1 / A6	85 - 90	1	●		
Z	450 LTD	84 -	1	●		
EN	500 A1-A7 / B1-B2	90 - 96	1	●		
EN	500 C1-C2 Vulcan	96 - 98	1	●		
EN	500 Vulcan Classic	90 -	1	●		
EN	500	98 -	1	●		
ZL	500 (Austria)	85 -	1	●		
GPZ	550	84 - 87	2	●	●	
GT	550	85 - 01	2	●		
Z	550 F	85 -	2	●		
ZX	550 A1 / A1L	84 -	2	●	●	
GPZ	600 R	85 - 93	2	●	●	
Z	600 GP	83 -	2	●	●	
ZL	600	85 -	1	●		
ZX	600 A1 / A2 / B1 Ninja	85 - 87	2	●	●	
VN	700 A1 Vulcan	85	2	●		

KAWASAKI						
ZN	700 A1 / A1L	84 -	2		●	●
GPZ	750 R	85 -	2		●	●
GPZ	750 T	83 -	2		●	●
GPZ	750	83 - 87	2		●	●
GT	750	86 -	2		●	●
VN	750 A1-A12 Vulcan	86 - 96	2		●	
VZ	750 Twin	88	1		●	
Z	750 E1 / E1L / Turbo	84 -	2		●	●
Z	750 Eliminator	88	2		●	●
Z	750 K1 / K2	83 - 84	2		●	
Z	750 LTD Twin	83 -	1		●	●
ZX	750 A1 / E / GP	83 - 85	2		●	●
	750 Vulcan	93 -	1		●	
VN	800 A1 / A2 Vulcan / Classic	95 -	1		●	
GPZ	900 R	84 - 89	2		●	●
ZL	900 Eliminator	85 -	2		●	●
ZX	900 A1 / A1L	83 - 84	2		●	●
GPZ	1000 RX	86 -	2		●	●
GTR	1000	86 - 93	2		●	●
GTR	1000	94 - 06				●
Z	1000 R Ninja	86 -	2		●	●
ZL	1000	86 -	2		●	●
GPZ	1100	83 - 94	2		●	●
Z	1100 GP	83 -	2		●	●
Z	1100 LTD	85 -	2		●	●
Z	1100 R LTD	84	2		●	●
ZN	1100 B1 / B1L / LTD	84 -	2		●	●
ZX	1100 A1 / GP	83 -	2		●	●
ZG	1200 B1-B10 Voyager	86 -	2		●	●
Z	1300 6	85	2		●	●
ZN	1300 A1 / A2 / A2L	83 - 84	2		●	●
ZN	1300 Voyager	85 -	2		●	●
VN	1500 A1-A10 Vulcan SE	87 - 96	1		●	●
VN	1500 B1-B4 / C1 / C2 Vulcan	87 - 95	1		●	●
VN	1500 Classic	96 -				●
VN	1500 Classic Tourer	98 -		L		●
VN	1500 Sumo	88 -	1		●	●
VN	1500 Vulcan Nomad	98 -		L		●

2287

Street	Sport	Racing	Enduro	MX	Off-road Racing	ATV
S4		RX3				

HONDA						
R	50 Monkey	88 -	1	●		
NS	125	89			●	
RS	125 R	91 - 94			●	
RS	125 R	95 -			●	
NS	250	89			●	
RS	250 R	93 -			●	

Dim. / Size

51.8 mm
36.6 mm
8 mm

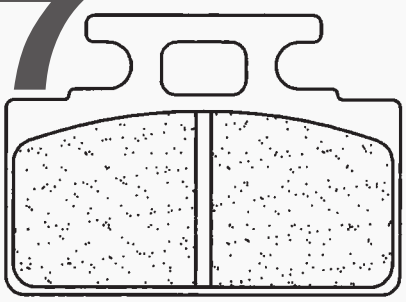

2288

Street	Sport	Racing	Enduro	MX	Off-road Racing	ATV
S4	A3+	RX3	EN10	MX10		ATV1

ALFER						
	125 Enduro	97 -	1	●		
	250 Enduro	97 -	1	●		
ATK						
ATK	250 LQ	95	1	●		
	350 CC	94 - 95	1	●		
	350 DS	94 - 96	1	●		
	406 CC	94 - 95	1	●		

ATK						
	605 CC	94 - 96	1		●	
	605 DS	94 - 96	1		●	
CAGIVA						
	110 Passing	94 -	1		●	
	500 Canyon	99 -	1		●	
	600 Canyon	96	1		●	
	900 E.I Canyon	98	1	L	●	
CAN-AM						
	1000 Commander	11 -		L		●
	1000 Commander	11 -	1	R	●	
	1000 Commander Max	14 -	1	R	●	
CF MOTO						
CF	500 Ranger	10 - 12	1	R	●	
CF	500 Terracross	11 - 12	1	R	●	
CF	625 Terracross	11 - 13	1	R	●	
CF	800 Tracker	13	1	R	●	

1 - 2 = Nombre de jeux avant / Number of front sets / Anzahl Sets / Numero blister / Numero des juegos
L = Gauche / Left / Links / Sinistra / Izquierda - R = Droite / Right / Rechts / Destra / Derecha

Street	Sport	Racing	Enduro	MX	Off-road Racing	ATV
S4 A3+ RX3			EN10	MX10		ATV1

2288 suite

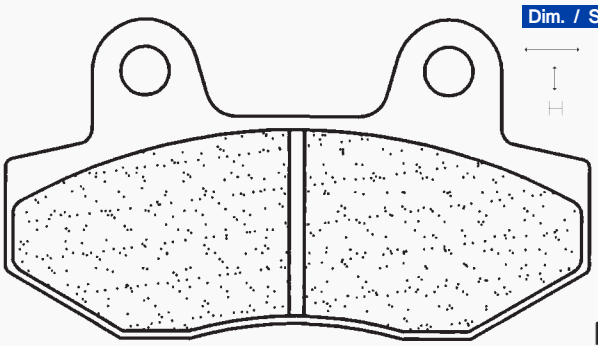

Dim. / Size

77 mm
42 mm
8 mm

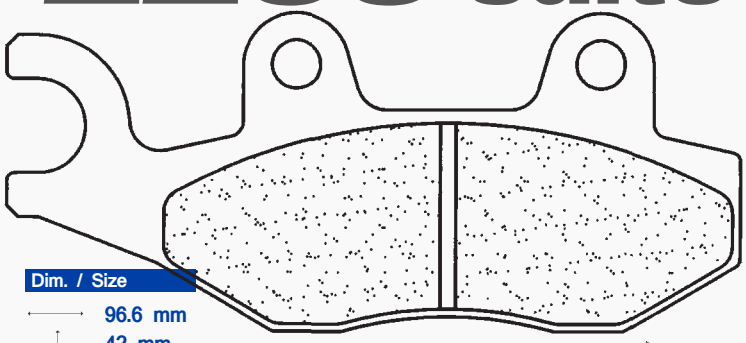

Dim. / Size

96.6 mm
42 mm
8 mm

HONDA								
CA	125	Rebel	95 - 96	1		●		
NSR	150		02 -				●	
CMX	250	C Rebel	96 -	1		●		
HRD								
	125	GSE	96	1		●		
	250	GSE	96	1		●		
JINCHENG								
JC	250		06 -	1		●		
KAWASAKI								
KLX	125		10 -	1		●		
KLX	125	D-Tracker	10 -	1		●		
KX	125	G / H / J	89 - 93	1		●		
KDX	200	E5	93	1		●		
KX	250	G1 / H1 / H2 / J1 / J2	89 - 93	1		●		
KLX	250	S / SF	09 -	1		●		
KDX	250	SR / D1 / D2 / D3 / D4	91 - 94	1		●		
EL	252	Eliminator	01 -	1		●		
KLF	300	C1-C12 Bayou	89 - 05	1	L	●		
KLF	400	B1-B7 Bayou	93 - 99	1	L	●		
KX	500	E1 / E2 / E3 / E4 / E5	89 - 93	1		●		
KVF	650	Brute Force 4X4 i F/G/H	07 -	1	L	●		
KLR	650		08 -	1		●		
KVF	750	Brute Force 4X4 i	04 -	1	L	●		
KRF	750	Teryx 4x4	08 -	1	L	●		
	800	Teryx 4 BEF/CEF/DEF	14 -	1	L	●		
	800	Teryx BEF/CEF/DEF	14 -	1	L	●		
KEEWAY								
	125	Superlight	06 -	1		●		
	150	Superlight	06 -	1		●		
	250	Landcruiser	06 -	1		●		
KREIDLER								
	125	Enduro	07 -	1		●		
	125	Supermoto	07 -	1		●		
	200	Enduro	07 -	1		●		
KYMCO								
	125	Stryker	01 - 06	1		●		
	150	Stryker	05 -	1		●		
MASH								
	125	Café Racer	14 - 15	1		●		
	125	Seventy Five	13 - 15	1		●		
	250	Two Fifty	14 - 15	1		●		
MZ / MUZ								
	125	SM / SX (All models)	02 - 07	1		●		
ROYAL ENFIELD								
	500	Bullet	09 - 14	1		●		
	500	Bullet Electra X	05 - 14	1		●		
	500	Bullet Classic	09 - 14	1		●		
	500	Bullet Classic Chrome	09 - 14	1		●		
	500	Bullet Battle Green	09 - 14	1		●		
	500	Bullet Desert Storm	12 - 14	1		●		
	500	Clubman	09 - 12	1		●		
	500	Electra	09 - 14	1		●		
	500	Fury	11 - 12	1		●		
	500	Trials	09 - 12	1		●		
	500	Woodsman	09 - 12	1		●		
SUZUKI								
EN	125	125-2 / 125-2A	05 -	1		●		
RM	125	H	87	1		●		
RM	125	J	88	1		●		
RM	125	K / L / M	89 - 91	1		●		
RM	125	N / P / R / S	92 - 95	1		●		
TS	125	R	89 - 96	1		●		
TS	200	R	89 - 94	1		●		
RM	250	H / J	87 - 88	1		●		

SUZUKI								
RM	250	K / L / M	89 - 91	1		●		
RMX	250	K / L / M / N / P / R / S	89 - 95	1		●		
RM	250	N / P / R / S	92 - 95	1		●		
DR	250	SL/SM/SN/SEP/SER/SES (SJ44A)	90 - 95	1		●		
LT-F	300	King Quad	02 -	1	L	●		
DR	350	SER/SES	94 - 95	1		●		
DR	350	SET/SEV	96 - 97	1		●		
DR	350	SL/SM/SN/SP	90 - 93	1		●		
LT-R	450	Quad Racer	06 -	1	L	●		
LT-F	500	FW/FX/FY2 Quadrunner	98 - 02	1	L	●		
LT-A	500	FY1/FK1 Quadmaster	00 -	1	L	●		
RM	500	H	87 -	1		●		
TRIUMPH								
	750	Trident	91 - 98	1	R	●		
	800	Bonneville	01 - 06				●	
	800	Bonneville America	02 - 06				●	
	800	Bonneville T100	02 - 04				●	
	800	Speedmaster	03 - 04				●	
	865	Bonneville America	10 - 13				●	
	865	Bonneville America	14 -				●	
	865	Bonneville Newchurch	15 -				●	
	865	Bonneville Spirit	15 -				●	
	865	Bonneville T100	05 - 09				●	
	865	Bonneville T100	10 - 13				●	
	865	Bonneville T100 Black	14 -				●	
	865	Bonneville T214	15 -				●	
	865	Scrambler	06 - 13				●	
	865	Speedmaster	05 - 10				●	
	865	Speedmaster	10 - 12				●	
	865	Speedmaster	13 -				●	
	900	Bonneville T100	17 -				●	
	900	Street Cup	17 -				●	
	900	Street Scrambler	17 -				●	
T 509	900	Speed Triple	97 - 98				●	
	900	Sprint	93	1	R	●		
	900	Thruxton	04 -				●	
	900	Thruxton Ace	15 -				●	
	900	Tiger	92 - 98	1	R	●		
	900	Trident	91 - 98	1	R	●		
	900	Trophy	91 - 95	1	R	●		
T 595	950	Daytona	97 - 98				●	
	955	Daytona	99 - 06				●	
	955	Daytona Centennial	02				●	
	955	Speed Triple	99 - 04				●	
	955	Sprint ST	99 - 04				●	
	1050	Speed Triple (Brembo Rad.cal)	08 - 10				●	
	1050	Speed Triple (Brembo Rad.cal)	11 - 15				●	
	1050	Speed Triple (Nissin Rad.cal)	05 - 07				●	
	1050	Speed Triple R (Brembo Rad.cal)	12 - 15				●	
	1050	Speed Triple S	16 -				●	
	1050	Speed Triple R	16 -				●	
	1050	Sprint GT ABS	10 -				●	
	1050	Sprint ST	05 - 09				●	
	1050	Sprint ST ABS	10 -				●	
	1200	Bonneville Bobber	17 -				●	
	1200	Bonneville Speedmaster	18 -				●	
	1200	Bonneville T120	16 -				●	
	1200	Thruxton	16 -				●	
	1200	Thruxton R	16 -				●	
	1050	Tiger Sport (ABS)	13 - 14				●	
	1200	Tiger Explorer	12 - 15				●	
	1200	Tiger Explorer	16 - 17				●	
	1200	Tiger XC / XCx / XCa	18 -				●	
	1200	Tiger XR / XRx / XRt	18 -				●	

1 - 2 = Nombre de jeux avant / Number of front sets / Anzahl Sets / Numero blister / Numero des juegos
L = Gauche / Left / Links / Sinistra / Izquierda - R = Droite / Right / Rechts / Destra / Derecha

2288 suite

Street	Sport	Racing	Enduro	MX	Off-road Racing	ATV
S4 A3+ RX3			EN10	MX10		ATV1

TRIUMPH						
	1200 Trophy	91 - 95	1	R	●	
	1215 Trophy	12 - 13				●
	1215 Trophy SE	12 - 14				●
YAMAHA						
FZR	50	92 -	1		●	
YD	80	89 -	1		●	
XTZ	125 (5RM)	03 -	1		●	
YZ	125 A / B / D / E / F / G / H / J	90 - 97	1		●	
YZ	125 V / W	89	1		●	
WR	125	91 - 97	1		●	
WR	200 R	91 - 94	1		●	
DT	200 WR	91 - 93	1		●	
DT	230 Lanza	97 - 98	1		●	
YZ	250 A / WRA / B (2T)	90 - 91	1		●	
YZ	250 D / E / F / G / H / J (2T)	92 - 97	1		●	

YAMAHA						
TT	250 R	93 - 04	1		●	
YZ	250 W / WRW (2T)	89	1		●	
WR	250 ZB/ ZD/ ZE/ ZF/ ZG/ ZH/ZJ	91 - 97	1		●	
YZ	360	89	1		●	
YXR	450 Rhino	06 -	1	L	●	
YFZ	450 RY / RZ	09 -	1	L	●	
YFZ	450 S / T / R	04 - 05	1	L	●	
YFZ	450 V / W / X	06 - 08	1	L	●	
WR	500 B	91	1		●	
WR	500 ZD / ZE	92 - 93	1		●	
YXR	660 Rhino	04 - 06	1	L	●	
YFM	700 R Raptor	06 -	1	L	●	
XTZ	750 Super Ténéré	89 - 94	1	L	●	

2289

Street	Sport	Racing	Enduro	MX	Off-road Racing	ATV
S4 A3+ RX3						

Dim. / Size

90 mm
49 mm
11 mm

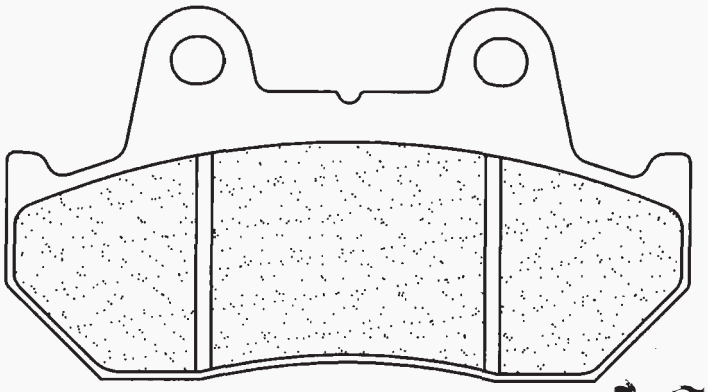

HONDA						
CB	125 TDC	83 - 89	1		●	
CBX	250 RSE	84 -	1		●	
GB	250 Clubman	88 -	1		●	
NS	250 R	85				●
NSR	250 R	87 -				●
	400 Xelvis		1		●	●
CB	400	82 -	2		●	●
CB	400 Four	81 -	2		●	
CB	400 Hawk	81 -	1		●	
CB	400 N	82 - 85	1		●	
CB	400 Twin	82 -	1		●	
CBR	400 F / FII	85	2		●	●
CBR	400 R	87				●
CM	400 T	82 -	1		●	
GB	400 TT	88 -	1		●	
NS	400 R	85 - 87				●
NV	400 Custom	88				●
CB	450 T	82 -	1		●	
CM	450 A / C	82 -	1		●	
CMX	450 Rebel	86 -	1		●	
CBR	500 F (Austria)	87 - 90				●
CX	500 C	81 - 82	2		●	
CX	500 Silver W Turbo	83 -	2		●	●
CX	500 Turbo	82 -	2		●	
FT	500	82 -	2		●	●
GB	500 TT	88 -	1		●	
GL	500 D	81 -	2		●	
GL	500	82				●
NS	500 R	85 -	2		●	●
VF	500 F / FII	84 - 86	2		●	●
VT	500 C Shadow	83 - 86	1		●	
XBR	500 S	85 -	1		●	
CB	550 SC	83 -	1		●	
CBR	600 F Hurricane	87 - 90				●
CBX	600 E	85 -	2		●	
VT	600 C Shadow	88	1		●	
XL	600 LM / RM	85 -	1		●	
XL	600 V Transalp	87 - 90	1		●	
CB	650 SC Nighthawk	83 - 85	2		●	
CB	650	85 -	2		●	
CBX	650 ED / SC / SCD	83 -	2		●	
CX	650 C	83 -	2		●	
CX	650 E	83 -				●
CX	650 Turbo	83 -	2		●	●
GL	650 D	83 -	2		●	
CB	700 SC	84 - 86	2		●	
VF	700 C Magna	84	2		●	
VF	700 C Magna	87	1		●	
VF	700 F Interceptor	84 - 85				●
VF	700 S	84 - 85	2		●	

HONDA						
VFR	700 F / F2	86 - 87				●
VT	700 C Shadow	87	1		●	
CB	750 C	82 -	2		●	
CB	750 C / F / FII / K	85 -	2		●	
CB	750 F	81 - 82	2		●	●
CB	750 K	81 -	2		●	●
CB	750 KZ	82 -	1		●	
CBR	750 Hurricane	87 -				●
CBX	750	84 -	2		●	●
CBX	750 F	84 -	2		●	●
NV	750 CG Shadow	86 -	1		●	
VF	750 C	82 -	2		●	
VF	750 C Magna	88 - 93	1		●	
VF	750 F	83 -	2		●	●
VF	750 S	85 -	2		●	
VF	750 Sport	82 - 83	2		●	
VFR	750 F	86 - 87				●
VP	750 CH Custom	87 -	1		●	
VT	750 C Shadow	86 - 96	1		●	
XLV	750 R	83 - 85	1		●	
VT	800 C	88 -	1		●	
CB	900 C	82 -	2		●	●
CB	900 F / F2	81 - 84				●
CB	1000 C	83 -	2		●	●
CBR	1000 F	87 - 88				●
CBX	1000	81 - 82				●
VF	1000 F / FII	84 - 86	2		●	●
VF	1000 FII Bol d'Or	85	2		●	●
VF	1000 R	84 - 85	2		●	
VF	1000 R	86 -	2		●	●
VT	1000 C	88 -	1		●	
CB	1100 F	83 -	2		●	●
CB	1100 R / RD	80 - 83	2		●	●
GL	1100 A1 / DLX / C / S Goldwing	81 -	2		●	●
VF	1100 C	83 - 86				●
VF	1100 S	84 - 85				●
VT	1100 C Shadow	87 - 93	1		●	
GL	1200 A Goldwing	84 -	2		●	●
GL	1200 DX Goldwing	86 -	2		●	●
GL	1200 Goldwing	84 -	2		●	●
GL	1500 Goldwing / SE	88 - 93				●
GL	1500 Goldwing Aspencade SE	94 -				●
GLX	1500	88 -				●

1 - 2 = Nombre de jeux avant / Number of front sets / Anzahl Sets / Numero blister / Numero des juegos
L = Gauche / Left / Links / Sinistra / Izquierda - R = Droite / Right / Rechts / Destra / Derecha

Street	Sport	Racing	Enduro	MX	Off-road Racing	ATV

S4 RX3

2296

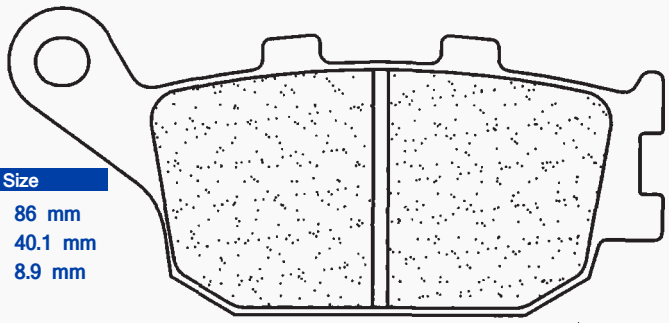

Dim. / Size
86 mm
40.1 mm
8.9 mm

HONDA					
CBR	400 F	92 -			●
CBF	500	04 -			●
CBF	500 ABS	04 -			●
CB	600 F Hornet	98 - 06			●
CB	600 F Hornet S	00 - 06			●
CB	600 Hornet (Japan model)	98 -			●
CB	600 Hornet ABS	07 -			●
CB	600 Hornet Wakizashi	06			●
CBF	600 N / S - ABS	04 - 07			●
CBF	600 N / S - ABS	08 -			●
CBR	600 F ABS	11 -			●
CBR	600 F2 / F2 Supersport	91 - 94			●
CBR	600 F3	95 - 98			●
CBR	600 F4 / F4 Sport	99 - 00			●
CBR	600 F4i / F4i Sport	01 - 10			●
CBR	600 RR	03 - 04			●
CBR	600 RR (Rad.cal)	05 - 06			●
FMX	650	05 -			●
NC	700 S (Auto gearbox)	12 -			●
NC	700 X (Auto gearbox)	12 -			●
XL	700 Transalp ABS	08 -			●
CB	750 N / F Seven Fifty	92 -			●
NR	750	92			●
CB	900 Hornet (919)	02 -			●
CBR	900 RR Fireblade	98 - 99			●
CBR	900 RR Fireblade	92 - 97			●
CBR	900 RR Fireblade (929)	00 - 01			●
CBR	900 RR Fireblade (954)	02 - 03			●
CB	1000 F Big One	93 - 97			●
CBF	1000	06 - 09			●
CBF	1000	10 -			●
CBR	1000 RR Fireblade (Rad.cal)	04 - 05			●
CRF	1000 L Africa Twin	16 -			●
VTR	1000 F Firestorm / Super Hawk	97 - 06			●
VTR	1000 SP-1	00 - 01			●
VTR	1000 SP-2	02 - 07			●
CB	1100 EX	14 -			●
CB	1100 RS	17 -			●
VT	1100 C2 Shadow	95 -			●
VT	1100 C3 Shadow	98 -			●
VT	1100 T Shadow	98 -			●
CB	1300 Super Four	03 - 09			●
CB	1300 Super Four ABS	05 - 09			●
VTX	1300 C / S	03 -			●
KAWASAKI					
Z	650 ABS / NON-ABS	17 -			●
	650 Ninja	17 -			●
	650 Vulcan S	15 -			●
Z	750 / ABS	07 -			●
KLZ	1000 Versys	12 -			●
KAWASAKI					
KLZ	1000 Versys LT / Tourer / Grand Tourer	15 -			●
KLV	1000	04 - 05	L		●
Z	1000	07 - 09			●
SUZUKI					
GW	250 Inazuma	12 -			●
GSF	650 Bandit / Bandit S	07 -			●
GSF	650 Bandit ABS / Bandit S ABS	07 -			●
GSX	650 F	08 -			●
SV	650 N / S	03 - 16	L		●
SV	650 N ABS / S ABS	07 - 15	L		●
DL	650 V-Strom	04 - 06	L		●
DL	650 V-Strom / ABS	07 - 14	L		●
DL	650 V-Strom XT / ABS	15 -	L		●
GSR	750	11 -	L		●
GSX-S	750	17 -			●
SV	1000 S / N K3-K7	03 - 07			●
DL	1000 V-Strom K2-K9	02 - 09	L		●
GSF	1200 S / N Bandit ABS K6	06			●
GSF	1200 S / N Bandit K6	06			●
GSX	1250 FA Traveller	10 -			●
GSF	1250 S / N Bandit (K7/K8/K9/L0)	07 - 10			●
GSF	1250 S / N Bandit ABS (K7/K8/K9/L0)	07 - 10			●
GSX	1300 B-King	07			●
YAMAHA					
FZ6	600 N / Fazer	04 - 07			●
FZ6	600 N / Fazer ABS	06 - 07			●
FZ6	600 N / Fazer S2	07 - 09			●
FZ6	600 N / Fazer S2 ABS	08			●
YZF	600 R6	03 - 05			●
YZF	600 R6	10 -			●
YZF	600 R6	06 - 09			●
MT-07	700	14 -			●
XSR	700	16 -			●
	700 Tracer	16 -			●
FZ8S	800 Fazer	10 -			●
FZ8	800	10 -			●
MT-09	900 Tracer	15 -			●
MT-09	900	14 -			●
FZ-1	1000 N / Fazer	06 -			●
FZ-1	1000 N / Fazer ABS	08 -			●
YZF	1000 R1 (Rad.cal)	07 - 08			●
YZF	1000 R1 (Rad.cal)	09 - 14			●
YZF	1000 R1 / R1 SP	04 - 06			●
XSR	900	16 -			●

Street	Sport	Racing	Enduro	MX	Off-road Racing	ATV

S4 RX3

2298

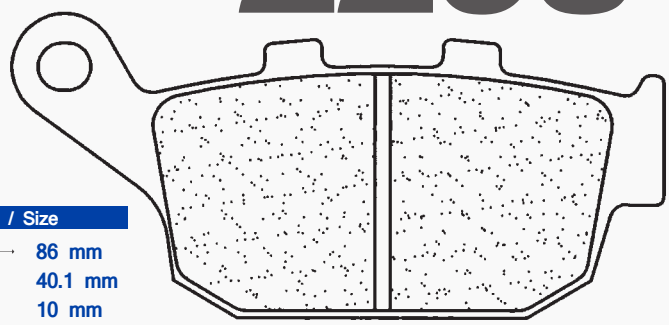

Dim. / Size
86 mm
40.1 mm
10 mm

BUELL					
	500 Blast	01 -			●
XB-9R	984 Firebolt	02 -			●
XB-9S	984 Lightning	03 -			●
XB-9SX	984 Lightning City X	04 -			●
M2	1200 Cyclone	94 - 97			●
XB-12R	1200 Firebolt	04 - 08			●
XB-12R	1200 Firebolt	09 -			●
XB-12S	1200 Lightning	04 - 08			●
XB-12Scg	1200 Lightning	06 - 08			●
XB-12Scg	1200 Lightning	09 -			●
S1	1200 Lightning	94 - 97			●
X1	1200 Lightning	98 - 02			●
XB-12Ss	1200 Lightning Long	06 - 08			●
XB-12Ss	1200 Lightning Long	09 -			●
XB-12STT	1200 Supet TT	07 -			●
S3	1200 Thunderbolt	94 - 97			●
S3T	1200 Thunderbolt	94 - 97			●
S3T	1200 Thunderbolt	98 - 02			●
XB-12X	1200 Ulysses	06 -			●

1 - 2 = Nombre de jeux avant / Number of front sets / Anzahl Sets / Numero blister / Numero des juegos
L = Gauche / Left / Links / Sinistra / Izquierda - R = Droite / Right / Rechts / Destra / Derecha

2298 suite

Street		Sport	Racing	Enduro	MX	Off-road Racing	ATV
S4	RX3						

HONDA					
CBR	125	R	11 -		●
CBR	250	Hurricane	87 -		●
CBR	250	R	11 -		●
CBR	250	R / RR	90		●
CBR	250	R ABS	11 -		●
CBR	250	RJ	88		●
NSR	250	R / SP	90		●
NSR	250	RJ	88 -		●
RS	250	R	91 - 92		●
VT	250	Spada	89		●
VTR	250		98 -		●
CBR	300	F	14 -		●
CBR	300	R	14 -		●
CB	400	Super Four	92 - 95		●
CB-1	400	(CB 400 F)	89 - 90		●
CBR	400	R	88 - 93		●
CBR	400	RR	87 -		●
NTV	400	Bros II	88		●
VFR	400	R NC30	89 -		●
VRX	400	T Roadstar	95 -		●
CB	500	F / F ABS	13 -		●
CB	500	X / X ABS	13 -		●
CBR	500	R	13 -		●
NX	500	Dominator (Austria)	88 - 92		●
NX	500	Dominator (Austria)	93 - 96		●
NTV	600	Bros	88 -		●
NTV	600	Revere	88 -		●
XL	600	V Transalp	94 - 96		●
XL	600	V Transalp	91 - 93		●
XL	600	V Transalp	97 - 99		●
CB	650	F ABS	14 -		●
CBR	650	F ABS	14 -		●
NT	650	Hawk GT	88 - 91		●
NT	650	V Deauville	98 - 01		●
NTV	650	Bros	88 -		●
NTV	650	Revere	88 - 93		●
NTV	650		94 -		●
NX	650	Dominator	93 - 96		●
NX	650	Dominator J / K	88 - 92		●
XL	650	V Transalp	00 -		●
XRV	650	Africa Twin	88 - 90		●
CTX	700	/ N	14 -		●
NC	700	S (Manual gearbox)	12 -		●
CMX	500	Rebel	17 -		●
NC	700	X (Manual gearbox)	12 -		●
NM4	700	Vultus ABS DCT	14 -		●

HONDA					
VFR	700	F Interceptor	88 - 89		●
XL	700	Transalp	08 -		●
NC	750	S / S DCT	14 -		●
NC	750	X / X DCT	14 -		●
XRV	750	Africa Twin	90 - 92		●
XRV	750	Africa Twin	93 - 03		●
KAWASAKI					
KLE	650	Versys / Versys LT	15 -		●
Z	750	R	11 -		●
Z	800	E	13 - 16		●
Z	800	E (ABS)	13 - 16		●
Z	800		13 - 16		●
Z	900		17 -		●
Z	900	RS / Cafe Racer	18 -		●
SUZUKI					
XF	650	Freewind	97 - 02		●
SFV	650	Gladius	09 -	L	●
TRIUMPH					
	600	Daytona	03 - 04		●
	600	Speed Four	02 - 05		●
	600	TT	00 - 03		●
	650	Daytona	05		●
	675	Daytona (Rad.cal)	06 - 08		●
	675	Daytona (Rad.cal)	09 -		●
	675	Daytona R (Brembo Rad.cal)	11 - 12		●
	675	Street Triple	07 -		●
	675	Street Triple R	09 - 12		●
	675	Street Triple RX	15 -		●
	800	Tiger	11 - 14		●
	800	Tiger XC	11 - 14		●
	800	Tiger XC / XCx / XCa	15 -		●
	800	Tiger XR / XRx / XRt	15 -		●
YAMAHA					
XJ6	600	/ ABS	09 -		●
XJ6	600	Diversion / ABS	09 -		●
XJ6	600	Diversion F / ABS	10 -		●

2299

Street		Sport	Racing	Enduro	MX	Off-road Racing	ATV
S4	RX3					X59	

Dim. / Size

62 mm
40.8 mm
9 mm

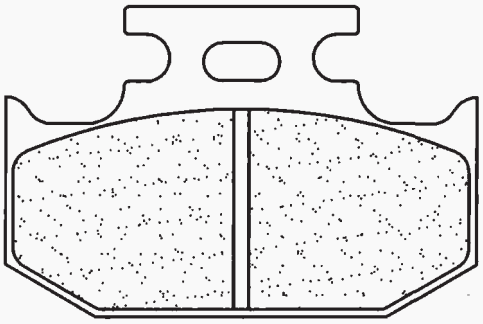

ALFER					
	125	Enduro	97 -		●
	250	Enduro	97 -		●
CANNONDALE					
MX	400		00 -		●
	440	C / E / X	03 -		●
S	440	SM	03 -		●
HRD					
	125	GSE	96		●
	250	GSE	96		●
KAWASAKI					
KDX	125	A / B	90 -		●
KX	125	G / H / J	89 - 93		●
KX	125	K1	94		●
KDX	200	E5	93		●
KDX	200	E6 / H1 / H2 / H3	94 - 99		●
KDX	200	SR / E1 / E4	89 - 92		●
KDX	220	R A4	97 -		●
KLX	250	D1-D4 / ES	93 - 96		●

KAWASAKI					
KLX	250	ES	94 - 97		●
KX	250	G1 / H1 / H2 / J1 / J2	89 - 93		●
KX	250	K1	94		●
KLX	250	R	93 - 94		●
KDX	250	SR / D1 / D2 / D3 / D4	91 - 94		●
KX	500	E1 / E2 / E3 / E4 / E5	89 - 93		●
KX	500	E6 / E7	94 - 95		●
KLX	650	A1-A3 / C1-C4	93 - 96		●
KLX	650	R	93 - 95		●
KLX	650	R	93 - 95		●
SUZUKI					
RM	125	N / P / R / S	92 - 95		●
RM	125	K / L / M	89 - 91		●
TS	125	R	89 - 96		●
TS	200	R	89 - 94		●

1 - 2 = Nombre de jeux avant / Number of front sets / Anzahl Sets / Numero blister / Numero des juegos
L = Gauche / Left / Links / Sinistra / Izquierda - R = Droite / Right / Rechts / Destra / Derecha

2299 suite

Street	Sport	Racing	Enduro	MX	Off-road Racing	ATV
S4	RX3				X59	

SUZUKI					
DR	250	RXT/RXLT/RXV/Djebel XC (SJ45A)	96 - 98		●
DR	250	SL/SM/SN/SEP/SER/SES (SJ44A)	90 - 95		●
DR	250	RS/RLS/RT/RLV/RLW (SJ45A) DOHC	90 - 95		●
DR-Z	250	K1 / K7	01 - 07		●
RM	250	N / P / R / S	92 - 95		●
RM	250	K / L / M	89 - 91		●
RMX	250	T / V / W	96 - 98		●
RMX	250	K / L / M / N / P / R / S	89 - 95		●
DR	350	SER/SES	94 - 95		●
DR	350	SET/SEV	96 - 97		●
DR	350	SEW/SEX	98 - 99		●
DR	350	SL/SM/SN/SP	90 - 93		●
DR	650	SE (SP46A/B)	96 - 97		●
YAMAHA					
FZR	50		92 -		●
YD	80		89 -		●
YZ	125	A / B / D / E / F / G / H / J	90 - 97		●
DT	125	RE	05 - 07		●
DT	125	X Supermotard	05 - 06		●
WR	125		91 - 97		●

YAMAHA					
WR	200	R	91 - 94		●
DT	200	WR	91 - 93		●
XT	225	Serrow W	93 - 98		●
DT	230	Lanza	97 - 98		●
YZ	250	A / WRA / B (2T)	90 - 91		●
YZ	250	D / E / F / G / H / J (2T)	92 - 97		●
TT	250	R	93 - 04		●
TY-Z	250	R (Scottish)	93 - 96		●
XG	250	Tricker	04 - 06		●
XT	250	X Supermotard	06 - 08		●
WR	250	ZB/ ZD/ ZE/ ZF/ ZG/ ZH/ZJ	91 - 97		●
WR	400	FK (4T)	98		●
YZ	400	FK (4T)	98		●
WR	500	ZD / ZE	92 - 93		●
TT	600	E (Belgarda)	94 - 95		●
TT	600	E (Belgarda)	94 - 95		●
TT	600	K (Belgarda)	93 - 95		●
TT	600	K (Belgarda)	93 - 95		●

2300

Street	Sport	Racing	Enduro	MX	Off-road Racing	ATV
S4 A3+		XBK5	EN10	MX10		ATV1

Dim. / Size

94 mm
34 mm
6.8 mm

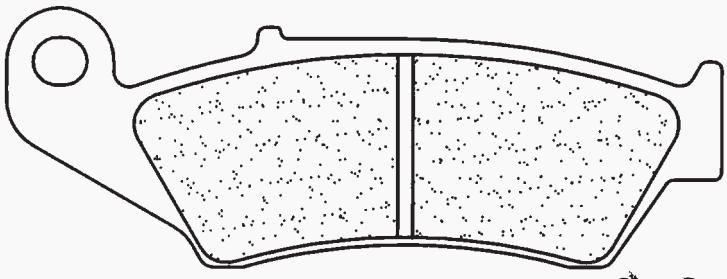

AJP					
PR5	250	Enduro	09 -	1	●
PR5	250	Supermotard	09 -	1	●
APRILIA					
RXV	450	Enduro	06 -	1	●
MXV	450		09 -	1	●
RXV	550	Enduro	06 -	1	●
BETA					
RR	250	Enduro	05 -	1	●
TR	300	Crosstrainer	15 -	1	●
RR	300		13 -	1	●
RR	350	Efi / Efi Racing	15 -	1	●
RR	350	Enduro	12 - 14	1	●
RR	390		15 -	1	●
RR	400	Enduro	05 -	1	●
RR	430	Racing	15 -	1	●
RR	430		15 -	1	●
RR	450	Enduro	05 -	1	●
RR	480	Racing	15 -	1	●
RR	480		15 -	1	●
RR	498	Enduro	12 -	1	●
RR	525	Enduro	05 -	1	●
CANNONDALE					
MX	400		00 -	1	●
	440	C / E / X	03 -	1	●
CPI					
	125	Sahel	02 -	1	●
FANTIC					
MX	50	Regolarna Competizione	08 -	1	●
	50	Regolarna Competizione	08 -	1	●
MX	65	Regolarna Competizione	08 -	1	●
	80	Regolarna Competizione	08 -	1	●
MX	85	Regolarna Competizione	08 -	1	●
	125	Regolarna Competizione	08 -	1	●
GAS GAS					
EC	125		00 -	1	●
MC	125		03 -	1	●
EC	200	Hobby	07 -	1	●
EC	200		00 -	1	●
EC	250	FSE	02 -	1	●
EC	250		00 -	1	●
MC	250		00 -	1	●
EC	300		00 -	1	●
EC	400	FSE	02 -	1	●

GAS GAS					
	400	Pampera	06	1	●
EC	450	F (4T)	13 - 14	1	●
EC	450	FSE / FSR	03 - 09	1	●
	450	Pampera	07 - 08	1	●
EC	450	Raid (4T)	14 -	1	●
EC	500	FSE Enduro	06 -	1	●
EC	515	FSR	08 -	1	●
HM					
CR	125	X Supermotard	04 - 06	1	●
CRE	125	Enduro	02 - 07	1	●
CRE	125	R Enduro	95 - 01	1	●
CRE	125	X Supermotard	02 - 06	1	●
CRF	230	Enduro / Trial	04 - 07	1	●
CRE	250	R Enduro	02 - 07	1	●
CRE	250	Supermotard	02 - 03	1	●
CRF	250	F	04 - 08	1	●
CRF	250	Supermotard	04 - 06	1	●
CRE	450	F	02	1	●
CRE	450	F / X	04 - 07	1	●
CRE	450	R Enduro	02 - 07	1	●
CRF	450	R	04 - 08	1	●
CRF	450	R Enduro	04 - 08	1	●
CRF	450	R Supermotard	02 - 06	1	●
CRE	490	X	07	1	●
HONDA					
CRM	50	(Spain)	93 - 96	1	●
CR	125	R	02 -	1	●
CR	125	R	95 - 01	1	●
CRE	125		02 -	1	●
XR	125	L	03 -	1	●
CRF	150	F	03 -	1	●
CTX	200		04 -	1	●
CRF	230		04 -	1	●
SL	230		97 -	1	●
CR	250	R	02 -	1	●
CR	250	R	95 - 01	1	●
CRE	250	F	04 -	1	●
CRE	250		02 - 03	1	●
CRF	250	R Efi	10 -	1	●
CRF	250	X	04 - 09	1	●
CRF	250	R	04 - 09	1	●
XLR	250	R SPL	94 -	1	●

1 - 2 = Nombre de jeux avant / Number of front sets / Anzahl Sets / Numero blister / Numero des juegos
L = Gauche / Left / Links / Sinistra / Izquierda - R = Droite / Right / Rechts / Destra / Derecha

Street	Sport	Racing	Enduro	MX	Off-road Racing	ATV
S4 A3+	XBK5		EN10	MX10		ATV1

2300 suite

HONDA						
XR	250	R	96 - 04	1	●	
XR	250	L	93 - 96	1	●	
XR	400	Supermotard	00 -	1	●	
XR	400	R	96 -	1	●	
XR	440	R	00 -	1	●	
CRE	450	F	02 -	1	●	
CRF	450	R	02 - 08	1	●	
CRF	450	R Efi	09 -	1	●	
CRF	450	X	05 -	1	●	
TRX	450	R	04 -	2	●	
CR	500	R	95 - 01	1	●	
XL	600	V Transalp	97 - 99	2	●	
XR	600	R	93 - 00	1	●	
XL	650	V Transalp	00 -	2	●	
XR	650	R	00 -	1	●	
XR	650	L	93 -	1	●	
TRX	700	XX	08 -	2	●	
XL	700	Transalp	08 -	2	●	
XRV	750	Africa Twin	93 - 03	2	●	
KAWASAKI						
KX	125	K1	94	1	●	
KX	125		95 -	1	●	
KDX	200	E6 / H1 / H2 / H3	94 - 99	1	●	
KDX	220	R A4	97 -	1	●	
KLX	250	D1-D4 / ES	93 - 96	1	●	
KLX	250	ES	94 - 97	1	●	
KLX	250	R	93 - 94	1	●	
KLX	250	S	06 - 07	1	●	
KLX	250		98 - 03	1	●	
KLX	250		98 - 07	1	●	
KX	250		95 -	1	●	
KX	250	K1	94	1	●	
KX-F	250	DFI	11 -	1	●	
KX-F	250		04 - 10	1	●	
KLX	300	R A2	97 -	1	●	
KLX	400	R / SR	03 -	1	●	
KLX	450	R	07 -	1	●	
KX-F	450	DFI	09 -	1	●	
KX-F	450		06 - 08	1	●	
KX	500	E8 / E9	96 -	1	●	
KX	500	E6 / E7	94 - 95	1	●	
KLE	650	Versys / Versys LT	15 -	2	●	
KLX	650	A1-A3 / C1-C4	93 - 96	1	●	
KLX	650	R	93 - 95	1	●	
KLX	650	R	93 - 95	1	●	
KLX	650	R D1	96	1	●	

SUZUKI						
DR	125	SM	08 - 10	1	●	
RM	125	K10	10 -	1	●	
RM	125	K6 - K9	06 - 09	1	●	
RM	125	T/V/W/X/Y K1-K5	96 - 05	1	●	
RM-E	125		05 -	1	●	
DR	250	RXT/RXLT/RXV/Djebel XC (SJ45A)	96 - 98	1	●	
DR	250	RS/RLS/RT/RLV/RLW (SJ45A) DOHC	90 - 95	1	●	
DR-Z	250	K1 / K7	01 - 07	1	●	
RM	250	K10	10 -	1	●	
RM	250	K6 - K9	06 - 09	1	●	
RM	250	T/V/W/X/Y K1-K5	96 - 05	1	●	
RME	250		05 -	1	●	
RMX	250	T / V / W	96 - 98	1	●	
RM-Z	250	E	04 - 09	1	●	
RM-Z	250	Efi	10 -	1	●	
DR	350	SEW/SEX	98 - 99	1	●	
DR-Z	400	E / S	00 - 08	1	●	
DR-Z	400	SM	05 - 09	1	●	
RM-X	450		05 -	1	●	
RM-Z	450	Efi	08 -	1	●	
RM-Z	450		05 - 07	1	●	
DR	650	SE (SP46A/B)	96 - 97	1	●	
YAMAHA						
WR	125		98 - 02	1	●	
YZ	125	R / S / T / V / W	03 - 07	1	●	
YZ	125	K / L / M / N / P	98 - 02	1	●	
WR	250	FR/FS/FT/FV	03 - 06	1	●	
WR	250	FW/FX/FY/FZ	07 - 15	1	●	
WR	250	R	08 -	1	●	
WR	250	ZK/FN/FP	98 - 02	1	●	
YZ	250	FN / FP (4T)	01 - 02	1	●	
YZ	250	FR / FS / FT / FV (4T)	03 - 06	1	●	
YZ	250	N / P (2T)	01 - 02	1	●	
YZ	250	R / S / T / V / W (2T)	03 - 07	1	●	
YZ	250	K / L / M (2T)	98 - 00	1	●	
WR	400	FK (4T)	98	1	●	
WR	400	FL / FM / FN (4T)	99 - 01	1	●	
YZ	400	FK (4T)	98	1	●	
YZ	400	FL (4T)	99	1	●	
WR	426	FN / FP (4T)	00 - 02	1	●	
YZ	426	FM / FN / FP (4T)	00 - 02	1	●	
WR	450	FR / FS / FT / FV (4T)	03 - 06	1	●	
WR	450	FW / FX / FY / FZ (4T)	07 -	1	●	
YZ	450	FR / FS / FT / FV (4T)	03 - 06	1	●	
YZ	450	FW (4T)	07	1	●	

Street	Sport	Racing	Enduro	MX	Off-road Racing	ATV
S4 A3+ RX3						

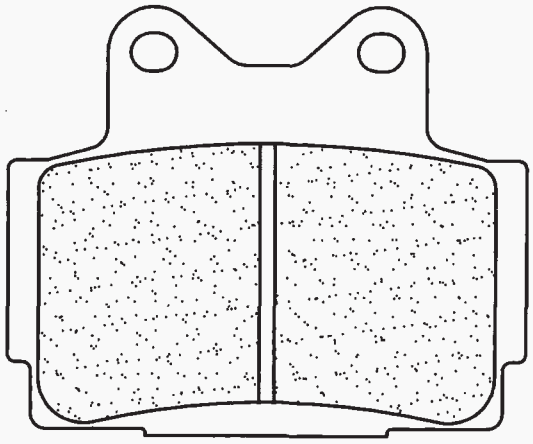

Dim. / Size

68 mm
56.5 mm
9 mm

2301

YAMAHA						
FZR	50		90 - 91			●
TZR	80		- 91	1	●	
RD	125	LC	85 - 87	1	●	
RZ	125	(1GV 030101-)	85 -	1	●	
TZR	125	(2RK / 3PC1)	87 - 89	1	●	
TZR	125	(3JB / 4JB / 4HW / 4HX)	93 - 95			●
TZR	125	(3PC2 / 3PC3)	90 - 92			●
TZR	150	(4AP2)	00 -			●
SDR	200		87 - 89	1	●	●
FZR	250	R	89 -			●
FZR	250		87 - 88			●
FZX	250	Zeal	91 - 92			●
R1-Z	250		90 -			●
RZ	250	R (1AR/1XG)	80 -	2	●	●
RZ	250	R (29L)	80 -			●
RZ	250	RR (5IL)	88 -	2	●	●
SRX	250	T / TC	84 - 87	1	●	
TDR	250		88 - 92			●
TZR	250	/ SP / R / RS / SPR	89 - 96			●
TZR	250		87 - 92			●
RD	350	N / F / F2	85 - 92	2	●	●
RD	350	R	92 - 95	2	●	●

1 - 2 = Nombre de jeux avant / Number of front sets / Anzahl Sets / Numero blister / Numero des juegos
L = Gauche / Left / Links / Sinistra / Izquierda - R = Droite / Right / Rechts / Destra / Derecha

2301 suite

Street	Sport	Racing	Enduro	MX	Off-road Racing	ATV

S4 A3+ RX3

YAMAHA						
RZ	350	F	86 - 88	2	●	●
FZ	400	N	85			●
FZ	400	R	86 - 87			●
FZR	400	(3EN1)	88			●
FZR	400	R (3EN2)	89			●
FZR	400	R SP (2TK-Exup)	87			●
FZR	400	RR (3TJ1 / 4DX)	89 - 92			●
FZR	400	RR SP (3TJ1 / 4DX)	91 - 94			●
FZR	400	Genesis (1WG)	86			●
SRX	400	(1JL)	85 - 86			●
SRX	400	(3VN)	90 - 96			●

YAMAHA						
XJ	400	S Diversion	91 -			●
XJR	400	R	93 - 96			●
XJR	400	R (Brembo)	95 - 99			●
RD	500	LC (RVZ500R)	84 - 86			●
RZ	500		84 - 86			●
FZ	600		87 - 88			●
FZS	600	Fazer	98 - 03			●
SRX	600	(1JK)	85 - 87	2	●	●
SRX	600	(3SX)	90			●
XJ	600	N / S Diversion	92 - 97			●
XJ	600	N / S Diversion	98 - 03			●

2302

Street	Sport	Racing	Enduro	MX	Off-road Racing	ATV

S4 A3+ **MX10**

Dim. / Size

94 mm
32 mm
7.4 mm

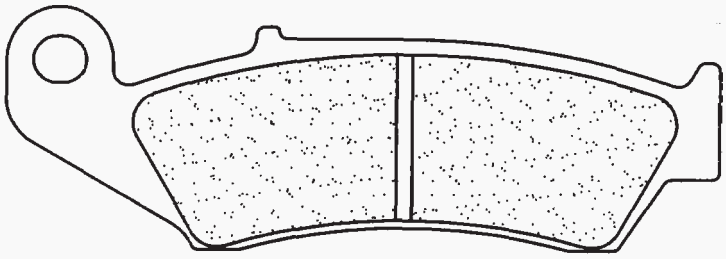

HONDA						
CRM	75	R	90 - 94	1	●	
CR	125	RH / RJ / RK	87 - 94	1	●	
AX-1	250		90	1	●	
CR	250	/ R	87 - 94	1	●	
CRM	250	R	90 -	1	●	
NX	250		88 - 90	1	●	
XL	250	Degree	91 -	1	●	
XLR	250	R Baja	88 - 90	1	●	
XR	250	R	88 - 89	1	●	
XR	250	L	91 - 92	1	●	
XR	250	R	90 - 95	1	●	
ATC	300	X	86 -	1	●	
CR	500	R	87 - 94	1	●	
XR	600	R	91 - 92	1	●	
XR	600	R	88 - 90	1	●	

2304

Street	Sport	Racing	Enduro	MX	Off-road Racing	ATV

S4 A3+ RX3

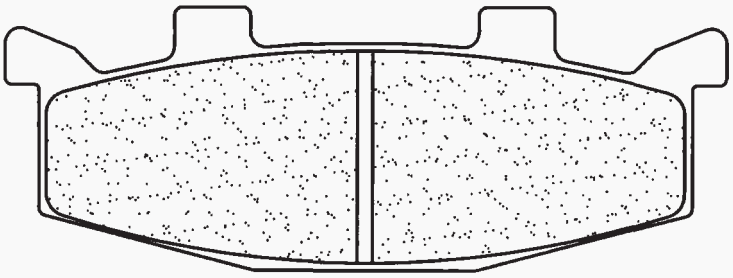

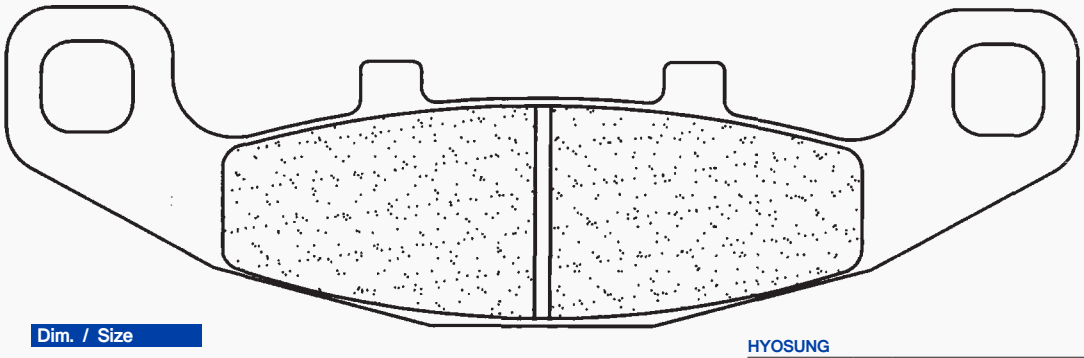

Dim. / Size

95.2 mm
34.7 mm
9 mm

Dim. / Size

141 mm
41.8 mm
8.5 mm

HYOSUNG						
GT	250	Comet	02	1	●	
GT	600	Comet	02	1	●	
KAWASAKI						
EX	250	R F2-F17 Ninja	88 - 07	1	●	
GPX	250	R	88 -	2	●	
ZR	250	Balius	91 - 95	1	●	
ZZR	250		90 - 01	1	●	
GPX	400		87 -			●

1 - 2 = Nombre de jeux avant / Number of front sets / Anzahl Sets / Numero blister / Numero des juegos
L = Gauche / Left / Links / Sinistra / Izquierda - R = Droite / Right / Rechts / Destra / Derecha

2304 suite

Street	Sport	Racing	Enduro	MX	Off-road Racing	ATV
S4 A3+ RX3						

KAWASAKI						
GPZ	400	R	89 -			●
GPZ	400	S	88 -	1	●	
KLE	400		91 -	1	●	
ZZR	400		90 - 94			●
	400	Eliminator	94 -	1	●	
ER-5	500		97 - 00	1	●	
EX	500	A1-A3	87 - 89	1	●	
EX	500	A4-A7	90 - 93	1	●	
EX	500	D1-D3 Ninja	94 - 96	1	●	
GPX	500	R (Austria)	88	2	●	●
GPZ	500	S A1-A6	87 - 93	1	●	
GPZ	500	S D1-D7	94 - 01	1	●	
KL	500	Tengai (Austria)	89 - 91	1	●	
KLE	500	A1-A4	91 -	1	●	
ZZR	500	(Austria)	90 - 92			●
ZR	550	B1 / B3 / Zephyr	90 - 92	2	●	
ZR	550	B4 / B5 / Zephyr	93 - 99	2	●	
GPX	600	R	94 -	2	●	●
GPX	600	R	88 - 93	2	●	●
GPZ	600	R	94 -	2	●	●
ZL	600	B2 Eliminator	95 - 98	1	●	
ZX	600	C1-C9 Ninja R	88 - 97	2	●	●
ZX6-R	600	D1-D4	90 - 93			●
ZZR	600		90 - 92			●

KAWASAKI						
KL	650	B1 / B2 / B3 Tengai (KLR)	89 - 91	1	●	
GPX	750	R	87 -	2	●	●
ZR	750	Zephyr	96 - 98	L		●
ZR	750	Zephyr	91 - 95	2	●	
GPZ	900	R	90 -			●
GTR	1000		94 - 06	2	●	
ZX10	1000	B2 / B3	88 - 90	2	●	●
ZR	1100	Zephyr	92 - 96			●
ZR	1100	Zephyr	97 -	L		●
ZZR	1100		90 - 93			●
SUZUKI						
RG	125	Wolf	92 - 94	1	●	
TV	200	Wolf	92 -	1	●	
GSF	250	Bandit	90 - 96	1	●	
GSX	250	F - Across	90 - 98	1	●	
GSX	250	S Katana	91 -	1	●	
SW1	250		92 -	1	●	
GSF	400	Bandit M/N/P	91 - 95	1	●	
GS	500	E	89 - 95	1	●	
VX	800	L / M / N / P / R	90 - 96	1	●	
DR	800	SM (SR43A) Big	91 - 95	1	●	
GSX	1100	G	94 - 95	2	●	
GSX	1100	GM / GN / GP	91 - 93	2	●	

2305

Street	Sport	Racing	Enduro	MX	Off-road Racing	ATV
S4 A3+ RX3		XBK5	C60			

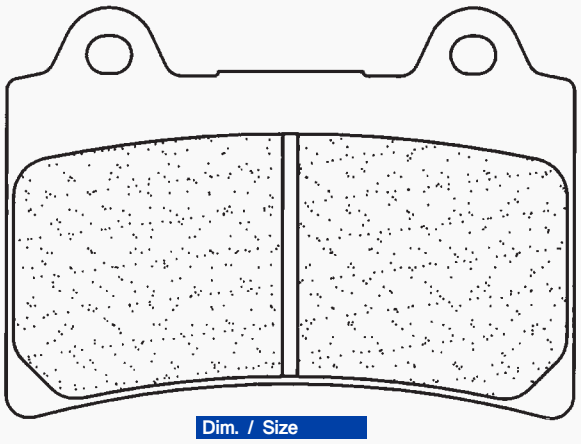

Dim. / Size

74.9 mm
54 mm
10 mm

YAMAHA						
FZR	250		87 - 88	2	●	
TDR	250		88 - 92	1	●	
TZR	250		87 - 92	1	●	
FZR	400	(3EN1)	88	2	●	
SRX	400	(3VN)	90 - 96	1	●	
FZR	400	R (3EN2)	89	2	●	
FZR	400	R SP (2TK-Exup)	87	2	●	
SRX	600	(3SX)	90	1	●	
FZR	750	R Genesis	87 - 88	2	●	
FZ	750		89 - 91	2	●	
TDM	850		91 - 95	2	●	
TRX	850		96 - 99	2	●	
FZR	1000	Genesis	87 - 89	2	●	
XJR	1200	/ SP	95 - 98	2	●	
FJ	1200	(3CV/CXW Type)	88 - 95	2	●	
XVZ	1300	A Royal Star / Tour Classic	96 - 01			●
XVZ	1300	TF Venture Star	99 - 01			●
XVZ	1300	Venture Royale	90 - 95			●
XVZ	1300	Venture Royale	86 - 89			●
XV	1600	A Wild Star	99 - 04			●

2306

Street	Sport	Racing	Enduro	MX	Off-road Racing	ATV
S4 A3+ RX3			EN10	MX10	X59	ATV1

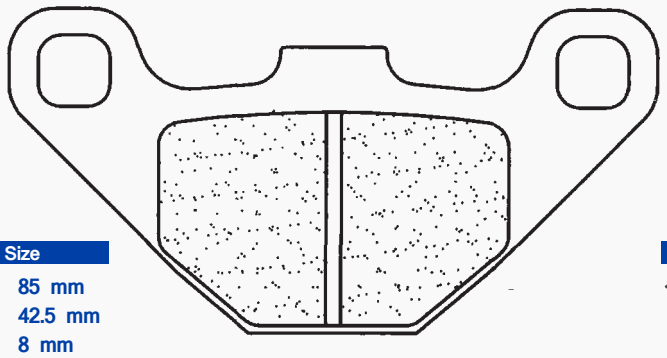

Dim. / Size

85 mm
42.5 mm
8 mm

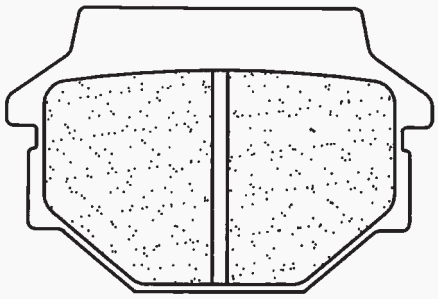

Dim. / Size

56 mm
37.1 mm
10 mm

1 - 2 = Nombre de jeux avant / Number of front sets / Anzahl Sets / Numero blister / Numero des juegos
L = Gauche / Left / Links / Sinistra / Izquierda - R = Droite / Right / Rechts / Destra / Derecha

Street	Sport	Racing	Enduro	MX	Off-road Racing	ATV
S4	A3+	RX3	EN10	MX10	X59	ATV1

2306 suite

APRILIA						
	125	Tuareg Wind	90 -			●
RX	125		92 - 07			●
RX	125		90 - 96			●
RX	125		97 -			●
	350	Tuareg Wind	90 -			●
	600	Tuareg	88 -			●
	600	Tuareg Wind	90 -			●
	650	Moto 6.5	95 -			●
	650	Pegaso	97 - 00			●
BATAVUS						
	50	Grand prix	80 -	1	●	
BUELL						
RS	1200					●
CAGIVA						
	125	Cross	86 -			●
WMX	125		89 - 90			●
WMX	250		89 - 90			●
	600	W16	95 -			●
DERBI						
DXR	200	Quad (Front disc)	04 -			●
DXR	200	Quad (Front drum)	04 -			●
DXR	250	Quad (Front disc)	04 -			●
DXR	250	Quad (Front drum)	04 -			●
FANTIC						
	50	1 Raider	87 -	1	●	
	50	Extra SM	98 -			●
	50	Strada	83	1	●	
	125	Extra SM	98 -			●
HUSABERG						
MC	350		91 - 93			●
	500	All models	91 -			●
HUSQVARNA						
CR	125		91 - 95			●
WR	125		91 - 96			●
WRK	125		90			●
WR	240		91 -			●
WRK	240		90			●
WR	250		90 - 96			●
CR	250		91 - 96			●
WR	260		90 -			●
TE	350	Enduro	90			●
WR	360		96			●
TE	410		96			●
TE	510		90 -			●
TC	610	Cross	91 - 96			●
TE	610		91 - 96			●
KAWASAKI						
KH	100	EX	88 -	1	●	
KH	100	GH	83 -	1	●	
AR	125	A1/ A1A / A7 / LC	82 - 94	1	●	
KE	125		86 -	1	●	
KH	125		82 - 98	1	●	
KMX	125		86			●
KMX	125		87 - 02			●
KMX	125		86			●
KMX	125		87 - 02			●
KX	125	E1	86	1	●	●
KX	125	E2 / F1	87 - 88			●
KX	125	B2 / C1 / D1	83 - 85	1	●	
KDX	200	C	86 - 88	1	●	
KDX	200	SR / E1 / E4	89 - 92	1	●	
KMX	200	A2 / A3 / A4	88 - 92			●
Z	200	A6	83 -	1	●	
GPZ	250	Belt Drive	83 - 84	1	●	
KL	250	D12 / D13	95 - 96	1	●	
KL	250	D2-D14 (KLR 250)	85 - 97	1	●	
KL	250	Super Sherpa	98 -			●
KR	250		- 85	2	●	
KX	250	D2	86	1	●	●
KX	250	E1 / F1	87 - 88			●
KX	250	C1 / C2 / D1	83 - 85	1	●	
KXT	250	A2 / B1 Tecate Trike	85 - 86	1	●	●
Z	250	T Scorpion	89 -	1	●	
ZR	250	Balius	91 - 95			●
ZZR	250		90 - 01			●
	250	Estrella	92 -	1	●	●
KLF	300	B1-B13 Bayou	88 -	2	●	

KAWASAKI						
GPZ	305		81 - 96	2	●	
KLR	350		85 -	1	●	
FX	400	R	86 - 88	2	●	
GPZ	400		85 - 87	2	●	
KLE	400		91 -			●
LX	400	Eliminator / SE	90	2	●	
Z	400	F	84 -	1	●	
ZR	400	F / A1	83 - 84	1	●	
ZR	400	Xanthus (D1)	92 - 95			●
ZX	400		85	1	●	
EX	500	D1-D3 Ninja	94 - 96			●
EX	500	E1-E3	94 - 96			●
GPZ	500	S B1-B5	88 - 93	2	●	
GPZ	500	S D1-D7	94 - 01			●
GPZ	500	S E1-E10	94 - 04			●
KL	500	Tengai (Austria)	89 - 91			●
KLE	500	A1-A4	91 -			●
KLR	500	(Austria)	87 - 88			●
KX	500	A1 / A2 / B1	83 - 85	1	●	
KX	500	B2	86	1	●	●
KX	500	C1 / D1	87 - 88			●
ZR	500	A1	83 -	1	●	
KX	550	A	83 -	1	●	
Z	550	F	83 - 84	2	●	
Z	550	GT	83 -	2	●	
ZR	550	A1 / GP	83 -	2	●	
KL	600	A1 / B1 / B2	84 - 86	1	●	
KLR	600	E	85 - 94	1	●	
KLR	600		84 - 86	1	●	
KL	650	B1 / B2 / B3 Tengai (KLR)	89 - 91			●
KL	650	C1 (KLR)	95 -			●
KLR	650	A1-A11	87 - 97			●
KLR	650	C1	98 -			●
KEEWAY						
	125	Speed	06 -	1	●	●
	150	Speed	06 -	1	●	●
KRAM-IT						
ER	125		89 - 93			●
MC	250		89			●
ER	300		89			●
KTM						
GS	125		89 - 90	1	●	●
GS	125		92 -			●
MX	125		89 - 90	1	●	●
MX	125		92 - 93			●
MXC	125		92 - 93			●
GS	250		89 - 90	1	●	●
MX	250		92 - 93			●
MX	250		89 - 90	1	●	●
EXC	300		93 - 96			●
MX	300		90	1	●	●
MX	300		92 -			●
MXC	300		92 - 93			●
LC 4	350		92 -	1	●	●
LC4	400		93 - 98			●
MX	500		92 - 93			●
MX	500		89 - 91	1	●	●
MXC	500		92 - 93			●
LC4	600	Six Days	92 -			●
LAVERDA						
	700	El Cid	90 -	2	●	●
MAICO						
	500		91			●
POLARIS						
	200	Phoenix	05 - 08			●
RIEJU						
	125	Marathon Pro (Radial.cal)	09 - 10			●
	125	Marathon Pro Supermotard	09 - 10			●
	125	NKD	08 - 10			●
	125	RS2 (J.Juan caliper)	07 - 10			●
	125	RS2 Pro (J.Juan caliper)	07 - 10			●
	125	Tango Motard (Cast wheel)	08 - 09			●
SUZUKI						
GSX-R	50		87 -	1	●	
OR	50	E	80 -	1	●	
RB	50	H	87	1	●	

1 - 2 = Nombre de jeux avant / Number of front sets / Anzahl Sets / Numero blister / Numero des juegos
L = Gauche / Left / Links / Sinistra / Izquierda - R = Droite / Right / Rechts / Destra / Derecha

2306 suite

Street	Sport	Racing	Enduro	MX	Off-road Racing	ATV
S4 A3+		RX3	EN10	MX10	X59	ATV1

SUZUKI						
RG	50	GAG	87 -	1	●	
RG	50	Gamma	90 -	1	●	
TV	50	Wolf	89 -	1	●	
ZR	50	SAPX / SKX / SLK	81 - 87	1	●	
GT	80	L/C	81 -	1	●	
RG	80	Gamma	- 87	1	●	
TRS	118		82 - 83	1	●	
GN	125	EM-T	91 - 04	1	●	
GS	125	ESD / ESF / ESK / ESM	83 - 94	1	●	
GS	125	ESR / ESX	95 - 00	1	●	
GS	125	ESZ	82	1	●	
GT	125	T / ET	80 -	1	●	
TR	125		83 -	1	●	
X4	125	/ X3E	81 -	1	●	
ET	240		86 -	1	●	
GSX	250	FX	02 - 05			●
NZ	250	S	86 -	1	●	
GSX	400	FX / FZ	81 - 83	2	●	
GS	450	E	90 -	1	●	
GS	450	S	86	1	●	

TGB						
	250	Blade / Congo	06 - 07	2	●	
	325	Blade 4x2 / LE	07 -	2	●	
	325	Target 4x2	09 -			●
	400	Target 4x2	09 -			●
	425	Target 4x2	09 -			●
	500	Target 4x2	09 -			●
	525	Blade 4x4 SL	09 -			●
	525	SE 4x4	09 -			●
	525	Target 4x4	09 -			●
	550	Blade 4x4 SE / SL	09 -			●
TRITON						
	250	Baja		2	●	●
	300	Baja		2	●	●
	300	Outback		2	●	●
	400	Baja		2	●	●
	400	Outback		2	●	●
	450	Enduro		2	●	●
YAMAHA						
TDR	125	(3HS1/3XD03SH3/3XD1)	89 - 93			●

2307

Street	Sport	Racing	Enduro	MX	Off-road Racing	ATV
A3+		XBK5				

BERINGER			
2 Piston caliper (Road)	1	●	
6 Piston caliper (Road)	3	●	
BREMBO			
P 30 A (Road)	1	●	

Dim. / Size

39.7 mm
49.5 mm
6 mm

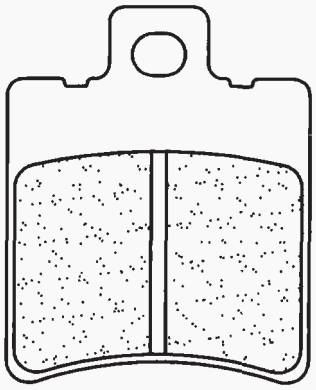

2308

Street	Sport	Racing	Enduro	MX	Off-road Racing	ATV
A3+						

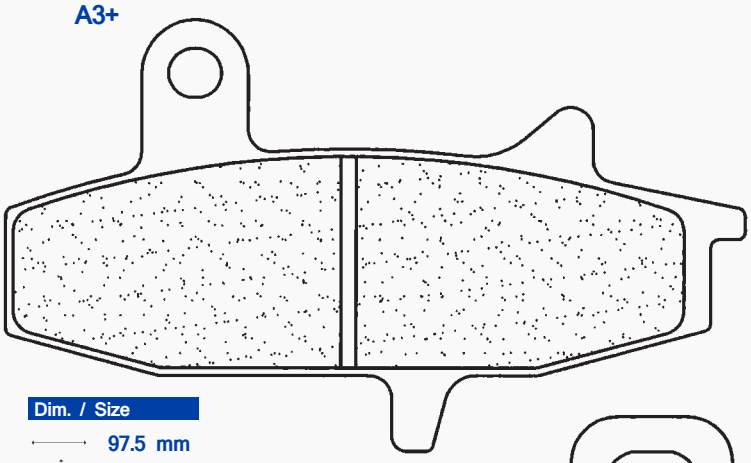

Dim. / Size

97.5 mm
58 mm
10 mm

SUZUKI						
DR	650	R (SP41A) / RS (SP42A)	90 - 91	1	●	
DR	650	R (SP44A/B)	92 - 93	1	●	
DR	650	RSE (SP43A)	91 - 95	1	●	
DR	750	SJ Big	88	1	●	
DR	750	SK Big	89 - 90	1	●	
DR-Z	800	Paris Dakar	88 - 90	1	●	
DR	800	SL (SR43A) Big	90	1	●	

Dim. / Size

117 mm
48 mm
9 mm

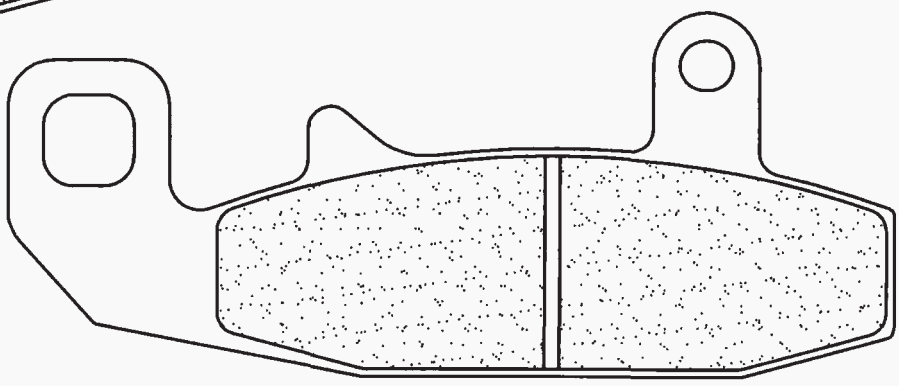

1 - 2 = Nombre de jeux avant / Number of front sets / Anzahl Sets / Numero blister / Numero des juegos
L = Gauche / Left / Links / Sinistra / Izquierda - R = Droite / Right / Rechts / Destra / Derecha

Street	Sport	Racing	Enduro	MX	Off-road Racing	ATV

A3+ XBK5

2309

Dim. / Size

75 mm
54 mm
10 mm

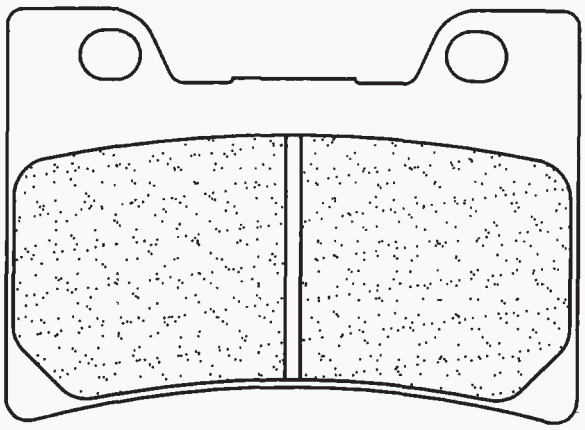

YAMAHA				
FZR	1000 EXUP	91 - 93	2	●

Street	Sport	Racing	Enduro	MX	Off-road Racing	ATV

A3+

2310

Dim. / Size

88 mm
46.1 mm
8.4 mm

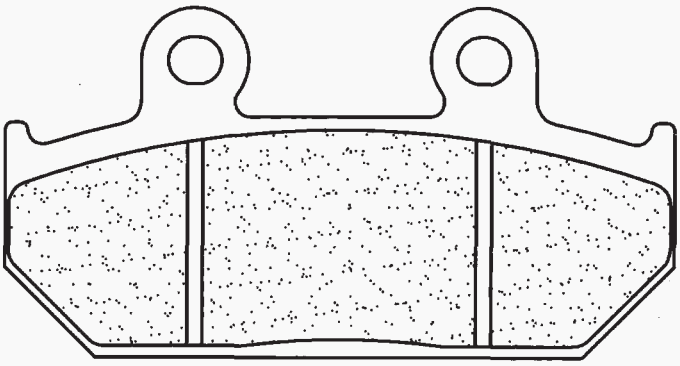

CAGIVA					
	750	Elefant	94 - 95	1	●
HONDA					
CB	250		88 - 91	1	●
CB	250		88 - 91	1	●
NV	400	Steed	88	1	●
NX	500	Dominator (Austria)	93 - 96	1	●
	600	Steed	88 - 91	1	●
NV	600	C	88 -	1	●
NX	650	Dominator	93 - 96	1	●
VFR	700	F / F2	86 - 87	2	●
VFR	750	F	86 - 87	2	●
CBR	750	Hurricane	87 -	2	●
CBR	1000	F	87 - 88	2	●

Street	Sport	Racing	Enduro	MX	Off-road Racing	ATV

A3+ XBK5

2311

Dim. / Size

75 mm
54 mm
10 mm

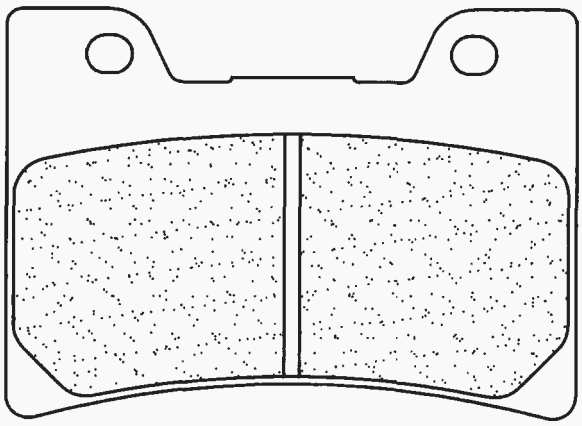

YAMAHA				
FZR	600 / R	90 - 95	2	●
TDM	850	96 - 01	2	●
FZR	1000 EXUP	89 - 90	2	●
FJ	1200 A ABS	91 - 95	2	●
XV	1200 V-Max	93 - 01	2	●

Street	Sport	Racing	Enduro	MX	Off-road Racing	ATV

S4 A3+ RX3

2313

Dim. / Size

102 mm
40 mm
9.8 mm

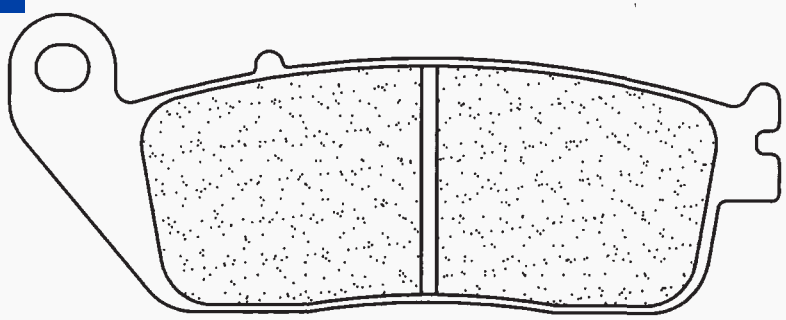

1 - 2 = Nombre de jeux avant / Number of front sets / Anzahl Sets / Numero blister / Numero des juegos
L = Gauche / Left / Links / Sinistra / Izquierda - R = Droite / Right / Rechts / Destra / Derecha

2313 suite

Street	Sport	Racing	Enduro	MX	Off-road Racing	ATV
S4	A3+	RX3				

DAELIM						
VL	125	Daystar	00 -	1	●	
VT	125	Evolution	00 - 01	1	●	
	125	Magna	97 -	1	●	
	125	Roadwin	04 -	1	●	
	125	Rocket	99 -	1	●	
	250	Roadwin	08 -	1	●	
HONDA						
VTR	250		98 -	1	●	
CB	400	Super Four	92 - 95	2	●	
VRX	400	T Roadstar	95 -	1	●	
CB	500	F / F ABS	13 -	1	●	
CB	500	X / X ABS	13 -	1	●	
CBR	500	R	13 -	1	●	
CMX	500	Rebel	17 -	1	●	
XL	600	V Transalp	94 - 96	1	●	
NTV	650		94 -	2	●	
DN-01	680		08 -			●
CTX	700	/ N	14 -	1	●	
NC	750	S / S DCT	14 -	1	●	
NC	750	X / X DCT	14 -	1	●	
VF	750	C CD Magna	94 -	1	●	
VFR	750	F	88 - 89			●
VFR	750	F	90 - 98			●
VT	750	C / C2 Shadow	97 - 03	1	●	
VT	750	C4 Shadow	04 -	1	●	
VT	750	DC Black Widow	01 -	1	●	
VT	750	DC7 Shadow spirit	07 -	1	●	
VT	750	S	11 -	1	●	
VFR	950	F / Carat	92 -			●
CBR	1000	F	89 - 92			●
VFR	1000		89			●
ST	1100	Pan European	90 - 02			●
ST	1100	Pan European ABS-TCS	92 - 95			●
CTX	1300		14 -			●
GL	1500	F6C Custom / C Valkyrie	96 - 02			●
INDIAN						
	1133	Scout	14 -		●	
	1800	Chief Classic	14 -			●
	1800	Chief Classic (Nissin Cal.)	14 -			●
	1800	Chief Vintage	14 -			●
	1800	Chief Vintage (Nissin Cal.)	14 -			●

INDIAN						
	1800	Chief Classic (Nissin calipers)	14 -			●
	1800	Chief Vintage (Nissin calipers)	14 -			●
	1800	Chieftain (Nissin calipers)	14 -			●
	1800	Chief Roadmaster Classic / Elite	15 -			●
SYM						
	125	Cevalo B9A (4T)	10	1	●	
TRIUMPH						
	865	Bonneville T100 Black	14 -	1	●	
	865	Speedmaster	10 - 12	2	●	
	865	Speedmaster	13 -	1	●	
	900	Adventurer	96 -			●
	900	Legend TT	98 - 01			●
	900	Thunderbird	95 - 03			●
	900	Thunderbird Sport	98 - 04			●
	900	Tiger	99 - 00			●
	955	Tiger (Up to VIN 198874)	00 - 04			●
VICTORY						
Kingpin	1634	8-Ball / Low / Tour	08 - 10			●
Vegas	1634	/ Low	08 - 10			●
Vegas	1634	8-Ball	08 - 10			●
Vegas	1634	Cory Ness Jackpot	08 - 10			●
Cross Country	1731		10 -			●
Cross Roads	1731		10 -			●
Hammer	1731	/ S	08 - 10			●
Hammer	1731	8-ball	10 -			●
Vegas	1731	Jackpot	10 -			●
Vegas	1731		08 - 10			●
Vision	1731	8-Ball	10 -			●
Vision	1731	Arlen Ness Victory	10 -			●
Vision	1731	Street / Tour	08 - 10			●
YAMAHA						
MT-01	1700	(4 piston caliper)	05 - 06			●
MT-01	1700	(6 piston caliper)	07 - 09			●
MT-01	1700	S (6 piston caliper)	09			●

2314

Street	Sport	Racing	Enduro	MX	Off-road Racing	ATV
S4		RX3			X59	

Dim. / Size

75 mm
36.1 mm
9.5 mm

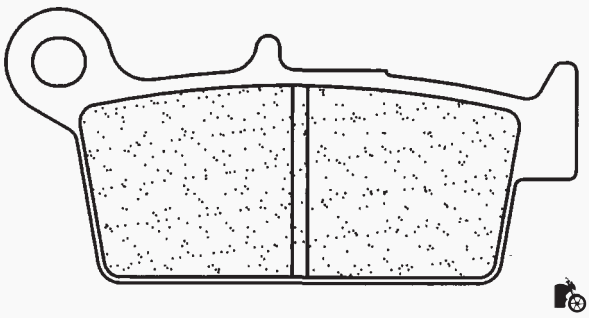

AJP						
PR5	250	Enduro	09 -			●
CPI						
	125	Sahel	02 -			●
FANTIC						
MX	50	Regolarna Competizione	08 -			●
	50	Regolarna Competizione	08 -			●
MX	65	Regolarna Competizione	08 -			●
	80	Regolarna Competizione	08 -			●
MX	85	Regolarna Competizione	08 -			●
	125	Regolarna Competizione	08 -			●

GAS GAS						
EC	125		00 -			●
MC	125		03 -			●
SM	125		02 -			●
EC	200	Hobby	07 -			●
EC	200		00 -			●
EC	250	FSE	02 -			●
EC	250		00 -			●
MC	250		00 -			●
SM	250		02 -			●
EC	300		00 -			●
EC	400	FSE	02 -			●
SM	400	fse	03 -			●
	400	Pampera	06			●
EC	450	FSE / FSR	03 - 09			●
SM	450	fse	03 - 06			●
SM	450	fsr	07 -			●
	450	Pampera	07 - 08			●
EC	500	FSE Enduro	06 -			●
EC	515	FSR	08 -			●
HM						
CRE	125	F / X	09			●
CRE	125	R Enduro	95 - 01			●
CRE	125	X Supermotard	02 - 06			●
CRE	250	Supermotard	02 - 03			●
HONDA						
CRM	50		88 - 92			●
CRM	50		93 - 96			●
CRM	75	R	90 - 94			●
NS-1	75		92 -			●
CR	80	R / RB	92 - 02			●
CRM	80		89 -			●
NSR	80	R	87 - 92			●
NSR	80	R	93 -			●

1 - 2 = Nombre de jeux avant / Number of front sets / Anzahl Sets / Numero blister / Numero des juegos
L = Gauche / Left / Links / Sinistra / Izquierda - R = Droite / Right / Rechts / Destra / Derecha

2314 suite

Street	Sport	Racing	Enduro	MX	Off-road Racing	ATV
S4	RX3				X59	

CR	85	R / R Expert	03 -			●
CR	125	RH / RJ / RK	87 - 94			●
CR	125	R	95 - 01			●
NS	150		92 -	1	●	
SL	230		97 -			●
CR	250	/ R	87 - 94			●
CR	250	R	95 - 01			●
XLR	250	R SPL	94 -			●
HONDA						
XR	250	R	96 - 04			●
XR	250	L	91 - 92			●
XR	250	L	93 - 96			●
XR	250	R	90 - 95			●
XR	400	Supermotard	00 -			●
XR	400	R	96 -			●
XR	440	R	00 -			●
CR	500	R	87 - 94			●
CR	500	R	95 - 01			●
XR	600	R	91 - 92			●
XR	600	R	93 - 00			●
XR	650	R	00 -			●
XR	650	L	93 -			●
HYOSUNG						
XRX	400		05 -			●
KAWASAKI						
KX	125		95 -			●
KLX	250	S	06 - 07			●
KLX	250	S / SF	09 -			●
KLX	250		98 - 03			●
KLX	250		98 - 07			●
KX	250		95 -			●
KLX	300	R A2	97 -			●
KLX	400	R / SR	03 -			●
KX	500	E8 / E9	96 -			●
KLX	650	R D1	96			●
SUZUKI						
RM	125	K10	10 -			●
RM	125	K6 - K9	06 - 09			●
DR	125	SM	08 - 10			●
RM	125	T/V/W/X/Y K1-K5	96 - 05			●
RM	250	K10	10 -			●
RM	250	K6 - K9	06 - 09			●
RM	250	T/V/W/X/Y K1-K5	96 - 05			●
DR-Z	400	E / S	00 - 08			●
DR-Z	400	SM	05 - 09			●
TM						
	80	Junior Cross	05 - 07			●
	80	Minicross / Junior	96 - 00			●
MX	85	JR	02 - 10			●
	85	Junior Cross	05 - 07			●
	85	Minicross / Junior	96 - 00			●
	100	Junior Cross	05 - 07			●

EN	125	Enduro (2T)	01 - 10	●
MX	125	(2T)	01 - 10	●
SMR	125	(2T)	05 - 10	●
TM				
EN	144	(2T)	08 - 10	●
MX	144	(2T)	08 - 10	●
EN	250	Enduro (2T)	01 - 10	●
EN	250	F Enduro (4T)	04 - 10	●
EN	250	Fi	10	●
MX	250	(2T)	01 - 10	●
MX	250	(4T) Cross	02 - 10	●
MX	250	Fi (4T)	10	●
SM	250		02	●
SME	250	(4T)	04	●
SMM	250	F (4T)	10	●
SMR	250	(2T)	05 - 08	●
SMR	250	F (4T)	10	●
EN	300	Enduro (2T)	01 - 10	●
MX	300	(2T)	01 - 10	●
SMR	300	(2T)	05 - 10	●
MX	400	(4T) Cross	02 - 03	●
SM	400		02 - 03	●
SME	400	(4T)	04	●
EN	450	F (4T)	04 - 10	●
MX	450	F (4T)	04 - 10	●
SMR	450	F (4T)	10	●
SMR	450	FES	05 - 09	●
SMX	450	F	05 - 10	●
EN	530	F (4T)	04 - 10	●
MX	530	F	05 - 10	●
SM	530		02 - 03	●
SME	530	(4T)	04	●
SMR	530	F	10	●
SMR	530	F ES	05 - 09	●
SMX	530	F	05 - 10	●
	530	Cross (4T)	02 - 03	●
SMX	660	F	04	●
SMX	660	F	05 - 10	●
YAMAHA				
YZ	125	K / L / M / N / P	98 - 02	●
WR	125		98 - 02	●
YZ	250	FN / FP (4T)	01 - 02	●
YZ	250	K / L / M (2T)	98 - 00	●
YZ	250	N / P (2T)	01 - 02	●
WR	250	ZK/FN/FP	98 - 02	●
YZ	400	FL (4T)	99	●
WR	400	FL / FM / FN (4T)	99 - 01	●
YZ	426	FM / FN / FP (4T)	00 - 02	●
WR	426	FN / FP (4T)	00 - 02	●

2326

Street	Sport	Racing	Enduro	MX	Off-road Racing	ATV
S4	A3+	RX3			X59	ATV1

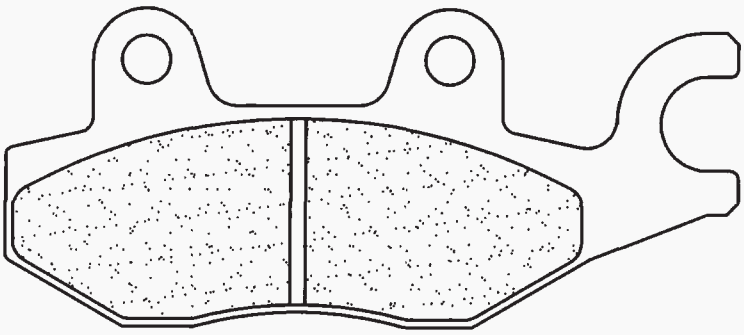

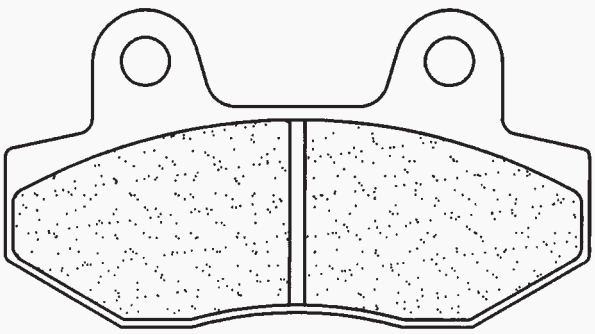

Dim. / Size

96.6 mm
42 mm
8 mm

Dim. / Size

77 mm
42 mm
8 mm

1 - 2 = Nombre de jeux avant / Number of front sets / Anzahl Sets / Numero blister / Numero des juegos
L = Gauche / Left / Links / Sinistra / Izquierda - R = Droite / Right / Rechts / Destra / Derecha

2326 suite

Street	Sport	Racing	Enduro	MX	Off-road Racing	ATV
S4 A3+ RX3					X59	ATV1

AEON								
	125	Overland	02 -				●	●
	180	Overland	02 -				●	●
	180	Roadster	02 -				●	●
CAGIVA								
	500	Canyon	99 -				●	●
	600	Canyon	96				●	●
	900	E.I Canyon	98			L	●	●
	900	E.I Canyon	98		1	R	●	
	900	Elefant	90 - 92				●	●
	900	Gran Canyon	99 -				●	●
	1000	Navigator	00 -				●	●
CF MOTO								
CF	500	Ranger	10 - 12	1	L		●	
CF	500	Terracross	11 - 12	1	L		●	
CF	625	Terracross	11 - 13	1	L		●	
CF	800	Tracker	13	1	L		●	
CAN-AM								
	1000	Commander	11 -	1	L		●	
	1000	Commander Max	14 -	1	L		●	
DAELIM								
	125	Roadwin	04 -				●	●
	250	Roadwin	08 -				●	●
HONDA								
NS-1	75		92 -	1			●	
NSR	80	R	93 -	1			●	
VT	125	Shadow	99 -	1			●	
XLV	125	Varadero	01 -	1			●	
NSR	150		02 -	1			●	
CA	250	Rebel	90 -	1			●	
CBF	250		04 -	1			●	
JINCHENG								
JC	125	2A/3A	97 -	1			●	
KAWASAKI								
BN	125	Eliminator A3	00 -	1			●	
EX	250	R Ninja	08 - 12	1			●	●
EX	250	Ninja SL	15 -	1			●	●
KLF	300	C1-C12 Bayou	90 - 05	1	R		●	
EX	300	Ninja R	13 -	1			●	●
Z	300		15 -	1			●	●
KLF	400	B1-B7 Bayou	93 - 99	1	R		●	
KLE	300	Versys X / Urban / Adventure	17 -	1				●
KVF	650	Brute Force 4X4 i F/G/H	07 -	1	R		●	
KLR	650		08 -					●
KVF	750	Brute Force 4X4 i	04 -	1	R		●	
KRF	750	Teryx 4x4	08 -	1	R		●	
	800	Teryx 4 BEF/CEF/DEF	14 -	1	R		●	
	800	Teryx BEF/CEF/DEF	14 -	1	R		●	
H2	1000	H2 SX SE / Tourer / Performance	18 -	1	R		●	
KREIDLER								
	125	Florett D	07 -	1			●	
	125	Florett RMC-F	07 -	1			●	
KYMCO								
	125	Cruiser	99 -	1			●	
	125	Hipster	99 - 06	1			●	
	125	Pulsar	99 - 06	1			●	
	125	Quannon	08 -	1			●	●
	125	Zing	97 - 03	1			●	
	125	Zing II	04 - 09	1			●	
	150	Hipster	99 - 06	1			●	
	150	Zing	97 - 09	1			●	
LONCIN								
LX	110		02 -	2			●	
LX	125		02 -	2			●	
MZ / MUZ								
	125	RT (All models)	02 - 07	1			●	●
	125	SM / SX (All models)	99 - 01					●
	125	SM / SX (All models)	02 - 07					●
	125	VRT						●
	175	VRT						●
SUZUKI								
LT-F	300	King Quad	02 -	1	R		●	
LT-R	450	Quad Racer	06 -	1	R		●	
LT-F	500	FW/FX/FY2 Quadrunner	98 - 02	1	R		●	
LT-A	500	FY1/FK1 Quadmaster	00 -	1	R		●	
DR	800	SM (SR43A) Big	91 - 95					●
DR	800	ST Big	96 -					●
SYM								
XS	125	K	07 - 09	1			●	
TRIUMPH								
	750	Daytona	91 - 92					●
	750	Trident	91 - 98		R			●
	750	Trident	91 - 98	1	L		●	
	900	Daytona	93 - 96					●
	900	Daytona Super III	94 - 97					●
	900	Speed Triple	94 - 96					●
	900	Sprint	93		R			●
	900	Sprint	93	1	L		●	
	900	Sprint	94 - 98					●
	900	Sprint Sport Edition	97 - 98					●
	900	Tiger	92 - 98		R			●
	900	Tiger	92 - 98	1	L		●	
	900	Trident	91 - 98		R			●
	900	Trident	91 - 98	1	L		●	
	900	Trophy	91 - 95		R			●
	900	Trophy	91 - 95	1	L		●	
	900	Trophy	96 -					●
	955	Sprint RS	99 - 04					●
	955	Tiger (From VIN 198875)	04 - 06					●
	1000	Daytona	91 - 95					●
	1050	Tiger	07 - 11					●
	1050	Tiger SE (ABS)	10 - 13					●
	1200	Daytona	93 - 98					●
	1200	Trophy	91 - 95	1	L		●	
	1200	Trophy	96 - 03					●
	1200	Trophy	91 - 95		R			●
VOXAN								
	1000	Scrambler	06 -					●
YAMAHA								
FZR	50		90 - 91	1			●	
TZM	50	R	94 -	1			●	
TZR	50		90 - 92	1			●	
TZR	50		93 - 02	1			●	
YBR	250		07 -	1			●	
YFZ	450	RY / RZ	09 -	1	R		●	
YFZ	450	S / T / R	04 - 05	1	R		●	
YFZ	450	V / W / X	06 - 08	1	R		●	
YXR	450	Rhino	06 -	1	R		●	
YXR	660	Rhino	04 - 06	1	R		●	
YFM	700	R Raptor	06 -	1	R		●	
XTZ	750	Super Ténéré	89 - 94		L			●
XTZ	750	Super Ténéré	89 - 94	1	R		●	

Street	Sport	Racing	Enduro	MX	Off-road Racing	ATV
S4				MX10	X59	ATV1

2328

Dim. / Size

46.5 mm
45.5 mm
7.5 mm

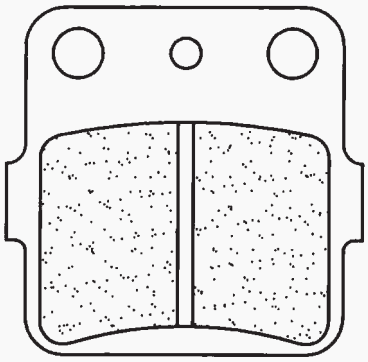

1 - 2 = Nombre de jeux avant / Number of front sets / Anzahl Sets / Numero blister / Numero des juegos
L = Gauche / Left / Links / Sinistra / Izquierda - R = Droite / Right / Rechts / Destra / Derecha

Street	Sport	Racing	Enduro	MX	Off-road Racing	ATV
S4				MX10	X59	ATV1

2328 suite

ARCTIC CAT							
	400	DVX	04 -	2		●	●
HONDA							
CR	80	R	86 - 91	1		●	
CR	80	R / RB	92 - 02	1		●	
CRM	80		89 -	1		●	
CR	85	R / R Expert	03 -	1		●	
ATC	200	X	83 - 85	1		●	●
ATC	250	R	82 - 84	1		●	●
ATC	250	X	85				●
TRX	250	EX Sportrax	01 - 08	2		●	
TRX	250	X9	09 -	2		●	
ATC	300	X	86 -				●
ATC	300	X	85				●
TRX	300	EX Fourtrax	93 - 08	2		●	●
TRX	300	EX Sportrax	01 - 08	2		●	●
TRX	300	X9	09 -	2		●	●
TRX	400	EX Fourtrax	99 - 08	2		●	●
TRX	400	EX Sportrax	01 - 08	2		●	●
TRX	400	X9	09 -	2		●	●
TRX	420	FA / FPA	09 -	2		●	
TRX	420	FPE / FPM 4x4	09 -	2		●	
TRX	450	EX Sportrax	01 -	2		●	●
HYOSUNG							
	450	Rapier	06 -				●
KAWASAKI							
KX	80	L / N / R-R6	88 - 96				●
KX	80		97 - 00				●
KX	85		01 -				●
KX	100	B5 / B6	95 - 96				●
KX	100	B7	97 -				●
KX	100		88 - 92				●
KXF	250	A1 / A2 Tecate	87 - 88				●
KSF	250	A1-A17 Mojave	87 -				●
KXT	250	B2 Tecate Trike	85 -				●
KEF	300	A1-A6 Lakota	95 -				●
KFX	400		02 -				●
KFX	450		07 -		L		●

MONTESA							
	80	Junior	96 -				●
SUZUKI							
RM	100		03				●
RM	125	J	88				●
LT	230	EH/EJ/EK/EL/EM/EN/EP	86 - 93				●
LT	230	SF / SG / SH / SJ	85 - 88				●
LT	250	RF / RG / RH	85 - 87				●
LT	250	RJ/RK/RL/RM/RN	88 - 94				●
LT	250	SK / SL	89 - 90				●
RM	250	H / J	87 - 88				●
LT-Z	400	Quad Sport	03 - 10				●
LT-R	450	Quad Racer	06 -		L		●
LT	500	RH / RJ / RK / RL	87 - 90				●
RM	500	H	87 -				●
DR-Z	800	Paris Dakar	88 - 90				●
YAMAHA							
YZ	80	E / F / G / H1 / J1	93 - 01				●
YZ	85	All models	02 - 10				●
YZ	125	V / W	89				●
YFS	200	R Blaster	03 - 06				●
YFM	250	R Raptor	08 -		L		●
YZ	250	W / WRW (2T)	89				●
YFM	300	Warrior	89				●
YFM	350	R Raptor	04 - 09	2		●	●
YFM	350	Warrior XT/XU	87 - 88				●
YFM	350	Warrior XW/XA-M	89 -				●
YFM	350	Wolverine 4x2	95 - 05				●
YFM	350	XA - M Warrior	92 - 04				●
YFZ	350	Banshee (A-M)	87 - 89				●
YFZ	350	Banshee (T-W)	90 - 09				●
YZ	360		89				●
YFM	400	FWP 4x4 (Big Bear)	02	2		●	
YFZ	450	S / T / R	04 - 05		L		●
YFM	600	Grizzly FWAK-FWAN	98 - 01	2		●	
YFM	600	Grizzly Hunting HM/HMC	00 -	2		●	

Street	Sport	Racing	Enduro	MX	Off-road Racing	ATV
	XBK5	C60				

2329

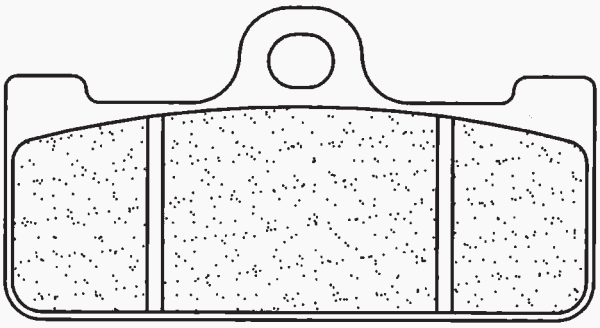

Dim. / Size
77.7 mm
41 mm
8.5 mm

APRILIA							
SXV	450	Van den Bosh Rep.	08 -	1		●	
SXV	550	Van den Bosh Rep.	08 -	1		●	
BREMBO							
P4 Radial 2 Pieces caliper (Racing)				1		●	
P4 Radial Monobloc caliper (Racing)				1		●	
P32x36 Monobloc caliper (Racing)				1		●	

1 - 2 = Nombre de jeux avant / Number of front sets / Anzahl Sets / Numero blister / Numero des juegos
L = Gauche / Left / Links / Sinistra / Izquierda - R = Droite / Right / Rechts / Destra / Derecha

Street	Sport	Racing	Enduro	MX	Off-road Racing	ATV

S4 A3+ RX3 XBK5

2332

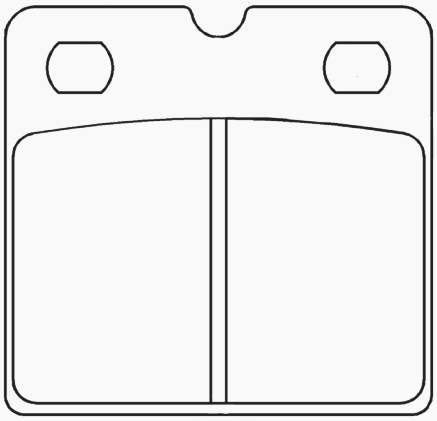

Dim. / Size

55.7 mm
54 mm
8.9 mm

APRILIA					
AF 1	250 Replica	90 -			●
BENELLI					
	350 Turismo (4T)				●
	354	78 - 82			●
	500 4T	- 76			●
	750 Sei	75 -	2	●	●
	900 Sei	84 -	2	●	●
BIMOTA					
	600 Bellaria Sport	91 -			●
1D	851 Tesi	91 -			●
DB1	900	92 -			●
DB2	900	92 -			●
1D	906 Tesi	91 -			●
SB3	1000	83 -	2	●	●
BMW					
R65	650 GS	87 - 92	1	●	
R65	650 LS	82 -	2	●	
R65	650	86 -	1	●	
R65/1	650	86 -			●
K75	750 C	85 - 08/89	2	●	●
K75	750 RT (ABS)	91 -			●
K75	750 S	09/88 -			●
K75	750 S	85 - 08/88	2	●	●
K75	750	09/88 -			●
R80	800 GS	81 - 84	1	●	
R80	800 RT	83	2	●	
K100	1000 GS	87 - 93			●
K100	1000 LT	92 -			●
K100	1000 LT / RS	09/88 - 90			●
K100	1000 LT / RS / RT	83 - 08/88	2	●	●
K100	1000 LT ABS	89			●
R100	1000 RS (4V)	90 - 92			●
R100	1000 RT	91 -			●
K1	1000	89 - 93			●
K	1100 All models	92 -			●
K	1100 LT / LTS	92 -			●
R	1100 RS	93			●
K	1100 RS / RT	93 -			●
R	1100 RS ABS	93 -			●
K	1100 RS ABS	93 -			●
K	1200 GT ABS	02 - 04			●
K	1200 RS	99 - 01			●
CZ					
CZ	180	93 -	1	●	
DUCATI					
	250 Desmo	- 77	1	●	
	350 Desmo	- 77	1	●	
	500 Pantah	85 -	2	●	
	500 Sport	77 -	2	●	●
	600 Pantah TL / SL	81	2	●	
	650 Pantah	84 -	2	●	●
	750 F1	86 -	2	●	●
	750 GT	74 - 76	2	●	
	750 Paso	87	2	●	
	750 Sport	90	2	●	●
	750 Supersport	91 - 94			●
	750 Supersport	74 - 90	2	●	●

DUCATI					
	851 Strada	91 -			●
	860 GT	75 - 76	1	●	●
	888 Roche Replica	91 -			●
	900 GTS	77 -	1	●	●
	900 Mike Hailwood Replica	85 -	2	●	●
	900 S2 Desmo	85 -	2	●	●
	900 Sport	77 -	2	●	●
	900 Supersport	90 - 94			●
	900 Supersport	78 - 89	2	●	●
	1000 / 6 Mike Hailwood Replica	85 -	2	●	●
	1000 Mille Replica	84 -	2	●	●
	1000 S2 Desmo	85 -	2	●	●
HERCULES					
	50 Silver Star Classic	93 -	1	●	
	50 Ultra	79 - 83	1	●	
HOREX					
	80 Rebell T	86 -	2	●	●
	80 Sport L	86 -	2	●	●
	125 Imperator	96 -	1	●	
	125 Regent	96 -	1	●	
	560 E	86 -	2	●	●
	600 Columbus	87 -	2	●	●
INDIAN					
	1800 Chief Classic (Brembo Cal.)	11 - 13			●
	1800 Chief Vintage (Brembo Cal.)	09 - 13			●
	1800 Chief Roadmaster (Brembo Cal.)	09 - 11			●
	1800 Chief Standard (Brembo Cal.)	09 - 11			●
LAVERDA					
SFC	500		2	●	●
SFC	600	86 -	2	●	●
	650 V Six	93 -	2	●	●
SF2	750	74 - 78	2	●	
SF3	750 RGS Corsa / Executive	77 -	2	●	●
SF3	750	74 - 78	2	●	
3C	1000 3CE / 3CL	74 -	2	●	●
RGS	1000 Jota	86 -	2	●	●
RGS	1000	83 -	2	●	●
SFC	1000	85 - 86	2	●	●
TGA	1000 Executive	84 -	2	●	●
	1000 Jota	76 -	2	●	●
	1200 Mirage	78 -	2	●	●
MOTO GUZZI					
NTX	350	90 -			●
V35	350 C		2	●	
V35	350 III	87 -	2	●	●
V35	350 Florida		2	●	
V35	350 GT	90 -	1	●	
V35	350 TT	86 -	2	●	●
NTX	650	90 -			●
V65	650 Florida	86 -	2	●	●
V65	650 GT	90 -	1	●	
NTX	750	90 -			●
S3	750	75 - 76	2	●	
SP	750	91 -	1	●	●
V75	750 Duna	86 -	1	●	●
V75	750	86 -	2	●	●
V75	750 Paris Dakar TT	86 -	1	●	●
T	850	74 - 76	1	●	
T3	850	75 -	2	●	●
T4	850	75 -	2	●	●
T5	850	75 -	2	●	●
T5	850 N.T.	86 -	1	●	●
	850 Le Mans	76 -	2	●	●
	1000 California II	85 - 88	2	●	●
	1000 California III Fuel Inj.	89	2	●	●
GT	1000 V	91 -	2	●	●
S	1000	90	2	●	●
SP	1000 III	91 -	2	●	●
SP	1000 Le Mans	79 -	1	●	●
V	1000 Strada	93 - 94	2	●	●
	1000 California III C	91 - 95	2	●	●
	1000 Daytona	91 -			●
	1000 Le Mans IV	85 -	2	●	●
	1000 Le Mans V	90 - 95	2	●	●
	1100 California	94 - 97	2	●	●
MZ / MUZ					
	125 ETZ	82 - 92	1	●	
	125 Roadstar		1	●	
	125 Saxon	93 - 97	1	●	
	125 Sportstar	93 -	1	●	
	150 ETZ	82 - 92	1	●	
	150 Saxon	95	1	●	
	250 ETZ	82 - 92	1	●	
	251 ETZ	89	1	●	

1 - 2 = Nombre de jeux avant / Number of front sets / Anzahl Sets / Numero blister / Numero des juegos
L = Gauche / Left / Links / Sinistra / Izquierda - R = Droite / Right / Rechts / Destra / Derecha

Street	Sport	Racing	Enduro	MX	Off-road Racing	ATV

S4 A3+ RX3

2332 suite

MZ / MUZ					
251	Fun	95 - 96	1	●	
251	Saxon Tour		1	●	
300	ETZ	82 - 92	1	●	
301	ETZ	90 -	1	●	
301	Saxon Tour		1	●	
301	Sportstar	96 -	1	●	
500	Saxon (All models)	93 - 98	1	●	
500	Silver Star Classic	93 -	1	●	
500	Silverstar Voyager	96 -	1	●	
500	Tour	96 -	1	●	
NORTON					
588	Classic	89	2	●	●
588	Interpol 2 (Rotary)	89	2	●	●
TRIUMPH					
750	Bonneville T140	85 - 88	2	●	●

Street	Sport	Racing	Enduro	MX	Off-road Racing	ATV

RX3

HARLEY DAVIDSON			
FXDL	1340 Dyna Low Rider	93 - 99	●
FXDWG	1340 Dyna Wide Glide	93 - 99	●
FLHTC	1340 Electra Glide Classic	90 - 99	●
FLHS	1340 Electra Glide Sport	90	●
FLST	1340 Heritage Softail	86 - 87	●
FLST	1340 Heritage Softail	90 - 99	●
FLT	1340 Series	88 - 99	●
FLT/H	1340 Series	86 - 87	●
FLTC	1340 Tour Glide Classic	90	●
FLHTC	1340 Ultra Classic	90 - 99	●

2342

Dim. / Size

104 mm
62 mm
11.5 mm

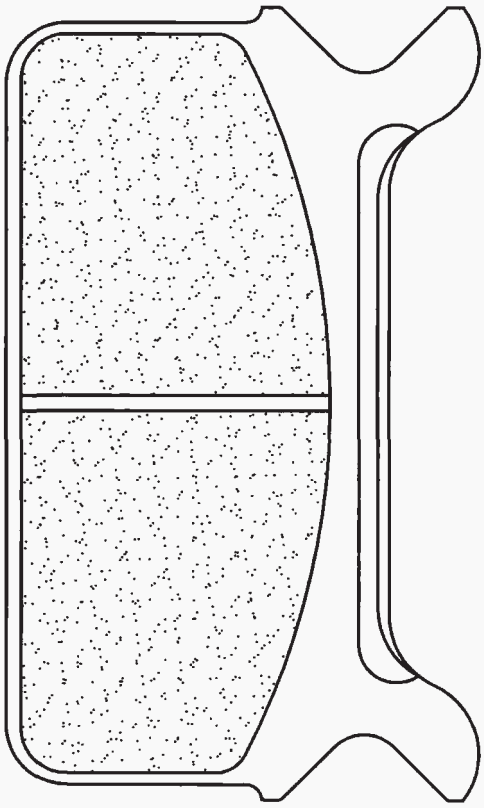

Street	Sport	Racing	Enduro	MX	Off-road Racing	ATV

A3+ RX3 XBK5 EN10 MX10 X59 ATV1

2352

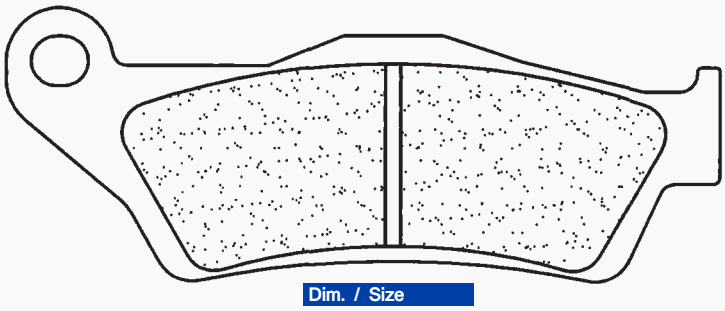

Dim. / Size

94 mm
36 mm
7.6 mm

ALFER					
VRE	125	00 -	1	●	
VR	250 All models	99 -	1	●	
VR	250 Supermotard	99 -	1	●	
APRILIA					
MX	125 SM	07 -	1	●	
MX	125	04 -	1	●	
RX	125 Enduro	08	1	●	
RX	125 Supermotard	08 -	1	●	
RX	125	97 -	1	●	
SX	125	08 -	1	●	
RST	1000 Futura	01 - 04			●
BENELLI					
BX	449 Cross	07 -	1	●	
	505 Enduro	08 -	1	●	
BMW					
G	450 Enduro	08 -	1	●	
S	1000 XR	15 -			●
R	1200 Nine T	14 -			●
R	1200 Nine T Pure / Scrambler	17 -			●
R	1200 Nine T Urban GS / Racer	17 -			●
HP2	1200 Sport	08 -			●
CAGIVA					
	750 Elefant	94 - 95			●
E	750	96 -	2	●	●
	900 Elefant	93 - 95	1	●	●
E	900	96 -	2	●	●

1 - 2 = Nombre de jeux avant / Number of front sets / Anzahl Sets / Numero blister / Numero des juegos
L = Gauche / Left / Links / Sinistra / Izquierda - R = Droite / Right / Rechts / Destra / Derecha

2352 suite

Street		Sport	Racing	Enduro	MX	Off-road Racing	ATV
A3+	RX3	XBK5		EN10	MX10	X59	ATV1

CCM						
MX	450		08 -	1	●	
	604	DS Supermoto	99 - 01	1	●	
	604	RS Roadster	01	1	●	
	644	DS Supermoto	02 -	1	●	
	644	RC 30	02 -	1	●	
DUCATI						
	620	Monster	05 - 06	2	●	
	620	Monster Dark	06 -	2	●	
	620	Multistrada	05 -	2	●	
	695	Monster	06 -	2	●	
	800	Monster S2R	05 - 07	2	●	
	800	Monster S2R Dark	05 - 06	2	●	
	1200	Multistrada	15 -			●
	1200	Multistrada S / S D-air	15 -			●
FACTORY						
YR	250		99 -	1	●	
GAS GAS						
	50	Wild HP	04 -	2	●	●
	125	Enducross	93 - 96	1	●	
EC	125		97 - 99	1	●	
	200	Wild HP	08 -	2	●	●
EC	200		99	1	●	
	240	Wild HP	04 -	2	●	●
	250	Wild HP	08 -	2	●	●
EC	250		97 - 99	1	●	
MC	250		97 - 99	1	●	
	300	Wild HP	03 -	2	●	●
EC	300		99	1	●	
	450	Wild HP	03 -	2	●	●
	515	Wild HP	09 -	2	●	●
HARLEY DAVIDSON						
XG	750	Street	14 -	1	●	●
HIGHLAND						
	450	MX	06 -	1	●	
	950	Outback V2	99 -	1	●	
	950	V2 Motard	00 -	1	●	
HONDA						
NX	500	Dominator (Austria)	97 -	1	●	
HUSABERG						
TE	125	(2T)	12 -	1	●	
FE	250	(4T)	13 -	1	●	
TE	250	(2T)	11 -	1	●	
TE	300	(2T)	11 -	1	●	
FC	350		95 - 99	1	●	
FE	350	(4T)	13 -	1	●	
FE	390		10 - 12	1	●	
FC	400		99 - 02	1	●	
FE	400	S - E	98 - 03	1	●	
	400	Enforcer Four	00 - 03	2	●	●
FC	450		98 - 03	1	●	
FE	450	4	06 - 08	1	●	
FE	450		09 - 13	1	●	
FX	450		03 -	1	●	
FX	450		10 - 11	1	●	
FC	470	E	01 - 02	1	●	
FX	470	E	01 - 02	1	●	
FC	501		98 - 01	1	●	
FE	501	(4T)	13 -	1	●	
FE	501	e SM	00	1	●	
FE	501	S - E	98 - 04	1	●	
FC	550		01 -	1	●	
FE	550	E	06 - 08	1	●	
FE	570		09 - 12	1	●	
FC	600	Supermotard	98 - 01	1	●	
FE	600	e SM	00	1	●	
FE	600	FE S - E - R	98 - 02	1	●	
FE	650	E	06 - 08	1	●	
HUSQVARNA						
CR	125		96 - 04	1	●	
CR	125		05 -	1	●	
SM	125		98 - 99	1	●	
SM	125	S	00 - 05	1	●	
SM	125	S	06	1	●	
TC	125	(2T)	14 -	1	●	
TE	125	(2T)	14 -	1	●	
TE	125	(4T)	11 - 13	1	●	
WR	125		97 -	1	●	
WRE	125	SM	99 -	1	●	
WRE	125		96 -	1	●	

HUSQVARNA						
CR	250		97 - 04	1	●	
CR	250		05 -	1	●	
FC	250	(4T)	14 -	1	●	
FE	250	(2T)	14 -	1	●	
TC	250	(2T)	14 -	1	●	
TC	250		04 -	1	●	
TC	250		02 - 03	1	●	
TE	250	(2T)	14 -	1	●	
TE	250	(4T)	02 - 05	1	●	
TE	250	(4T)	06 - 13	1	●	
TE	250	Meo Replica (4T)	11	1	●	
TE	250	R (4T)	13	1	●	
WR	250		97 -	1	●	
TC	300		14 -	1	●	
TE	300	(2T)	14 -	1	●	
WR	300	(2T)	09 - 13	1	●	
TE	310	(4T)	10 - 13	1	●	
TE	310	R (4T)	13	1	●	
FC	350		14 -	1	●	
FE	350		14 -	1	●	
TE	350		96 -	1	●	
WR	360		97 -	1	●	
TE	400		01 -	1	●	
TE	410		97 -	1	●	
TC	449	(4T)	11 - 13	1	●	
TE	449	(4T)	11 - 13	1	●	
FC	450	(4T)	14 -	1	●	
FE	450		14 -	1	●	
TC	450		04 -	1	●	
TC	450		02 - 03	1	●	
TE	450		03 - 05	1	●	
TE	450		06 -	1	●	
FE	501	(4T)	14 -	1	●	
TC	510		02 - 03	1	●	
TC	510		04 -	1	●	
TE	510		02 - 03	1	●	
TE	510		04 - 05	1	●	
TE	510		06 -	1	●	
TE	511	(4T)	11 -	1	●	
TC	570		01 -	1	●	
TE	570		01 -	1	●	
TC	610	Cross	97 -	1	●	
TE	610	E	06	1	●	
TE	610		97 -	1	●	
TE	630		10 -	1	●	
KRAM-IT						
GS	250		97 -	1	●	
MX	250		97 -	1	●	
SM	250		00 -	1	●	
KTM						
EXC	125	Enduro	99 - 03	1	●	
EXC	125	Enduro	04 -	1	●	
GS	125		92 -	1	●	
LC2	125		99 -	1	●	
MX	125		92 - 93	1	●	
MXC	125		92 - 93	1	●	
RC	125		14 -	1	●	
SX	125	SM	00 -	1	●	
SX	125		04 -	1	●	
SX	125		96 - 03	1	●	
SX	144		07 - 08	1	●	
SX	150		09 -	1	●	
EXC	200	Enduro	99 - 03	1	●	
EXC	200	Enduro	04 -	1	●	
SX	200		02	1	●	
SX	200		03 - 04	1	●	
EXC	250	(2T)	15 -	1	●	
EXC	250	Enduro / Enduro (4T)	99 - 03	1	●	
EXC	250	Enduro / Enduro (4T)	04 -	1	●	
EXC-F	250	Enduro (4T)	06 - 14	1	●	
MX	250		92 - 93	1	●	
SX	250		03 -	1	●	
SX	250		96 - 02	1	●	
SX-F	250		06 -	1	●	
EXC	300	Enduro	99 - 03	1	●	
EXC	300	Enduro	04 -	1	●	
EXC	300		93 - 96	1	●	
MX	300		92 -	1	●	

1 - 2 = Nombre de jeux avant / Number of front sets / Anzahl Sets / Numero blister / Numero des juegos
L = Gauche / Left / Links / Sinistra / Izquierda - R = Droite / Right / Rechts / Destra / Derecha

2352 suite

	Street	Sport	Racing	Enduro	MX	Off-road Racing	ATV
	A3+	RX3	XBK5	EN10	MX10	X59	ATV1

KTM							
MXC	300		92 - 93	1	●		
EXC-F	350		11 -	1	●		
SX-F	350		11 -	1	●		
MX	360		96 - 97	1	●		
SX	360		96 - 97	1	●		
XC	360		96 - 97	1	●		
EXC	380	Enduro	98 -	1	●		
MX	380		98 -	1	●		
SX	380		98 - 02	1	●		
XC	380		98 -	1	●		
EXC	400	Racing	00 - 03	1	●		
EXC	400	Racing	04 -	1	●		
LC4	400		93 - 98	1	●		
LC4-E	400	Enduro	99 -	1	●		
SC	400	Supercompetition	96 - 99	1	●		
SX	400	Racing	00 - 02	1	●		
SXC	400	Tiainen Replica	97 -	1	●		
EXC	450	(4T) / 6 Days (4T) / Racing	04 -	1	●		
EXC	450		03	1	●		
SX	450		03 -	1	●		
XC-F	450		08 -	1	●		
	450	Rally	11 -	1	●		
EXC	500	(4T) / 6 Days (4T)	12 - 14	1	●		
MX	500		92 - 93	1	●		
MXC	500		92 - 93	1	●		
SX-F	505		07 - 08	1	●		
XC-F	505		09 -	1	●		
EXC	520	Racing	00 - 02	1	●		
SX	520	Racing	00 - 02	1	●		
EXC	525	Racing	03	1	●		
EXC	525	Racing	04 -	1	●		
MXC	525	Desert	03 - 04	1	●		
SX	525	Racing	03	1	●		
SX	525	Racing	04 - 06	1	●		
EXC	530	Racing	08	1	●		
SXC	540	Tiainen Replica	99 - 00	1	●		
LC4	600	Six Days	92 -	1	●		
EGS	620	Adventure / Rallye / EGS-E	99	1	●		
EGS	620	Enduro / EGS-E	96 - 99	1	●		
LC4	620	SC Supermoto	00	1	●		
LC4	620	Supercompetition	96 - 00	1	●		
LC4	620	SX	95 - 99	1	●		
LC4	625	SC Supermoto	02 - 04	1	●		
SXC	625		03 - 04	1	●		
LC4	640	Adventure	01 - 02	1	●		
LC4	640	Adventure	03 - 07	2	●		
LC4	640	Adventure	01 - 02	1	●		
LC4	640	Adventure (2 sets)	03 - 07	1	●		
LC4	640	Adventure R	00	1	●		
LC4	640	Adventure R	00	1	●		
LC4	640	E Enduro	99 -	1	●		
LC4-E	640	Supermoto	99 - 06	1	●		
LC4	660	Rally	01 -	1	●		
	790	Duke	18 -	2	●		
	950	SM	05 -				●
	950	SMR	07				●
	950	Superenduro	06 -				●
	990	Adventure / R / S	06 - 12				●
	990	SMR	09 -				●
	990	SMT	09 - 13				●
	990	Supermoto R / SM-R	08 - 09				●
	990	Supermoto R / SM-R	10 - 13				●
	1050	Adventure	15 - 16				●
	1090	Adventure / Aventure R	17 -				●
	1190	Adventure	13 - 15				●
	1190	Adventure R	13 - 15				●
	1290	Super Adventure	15 - 16				●
	1290	Super Adventure R / S	17 -				●
MAICO							
	250	Enduro	99 -	1	●		
	250	Motocross	99 -	1	●		
	500	Enduro	99 -	1	●		
	500	Motocross	99 -	1	●		
	500	Supermotard	99 -	1	●		
MONTESA							
	80	Cross	96 -	1	●		
	125		96 -	1	●		
MONTESA							
	250	E	95 -	1	●		

MONTESA							
	320	Cota	96 -	1	●		
MOTO GUZZI							
	850	Breva	07 -				●
	850	Griso	07 -				●
	850	Norge	07 -				●
	1100	Breva	05 - 06				●
	1100	Breva (ABS)	07				●
	1100	Breva V1100	05				●
	1100	Griso	05 -				●
	1100	Griso 8v	07 - 08				●
ES	1100	Quota	99 - 01				●
	1200	Breva	08 -				●
	1200	Griso 8V	07 -				●
	1200	Norge	06 -				●
	1200	Norge GT 8V	10 -				●
	1200	Sport 2V	06 - 09				●
	1200	Sport 4V	08 - 09				●
	1200	Sport 8V	12-				●
	1200	Sport ABS	06 - 07				●
	1200	Stelvio	08 - 11				●
	1200	Stelvio 8V (ABS)	11 - 13				●
	1200	Stelvio 8V NTX	11 - 13				●
	1200	Stelvio NTX (ABS)	09 - 10				●
	1400	California Custom	13 -				●
	1400	California Touring	13 -				●
MOTO MORINI							
	1200	Granferro	10				●
	1200	Granpasso	08 - 10				●
	1200	GT	10				●
	1200	Scrambler	10 - 13				●
PRAGA							
ED	250		99 -	1	●		
CD	610		99 -	1	●		
RIEJU							
	250	Marathon	09 - 10	1	●		
	450	Marathon	09 - 10	1	●		
ROYAL ENFIELD							
	350	Bullet UCE	10 -	1	●		
SHERCO							
SE	250	/ R	14 -	1	●		
SE	250	Enduro 2.5i (4T) Inc.	08 - 10	1	●		
SE	250	F / F-R	14 -	1	●		
SE	250	i / iR	12 - 13	1	●		
SE	250	i-F	13	1	●		
	250	SM 2.5i Supermotard (4T)	08 -	1	●		
	250	SX 2.5i F Moto Cross	10 -	1	●		
SE	300	/ R	14 -	1	●		
SE	300	Enduro 3.0i (2T)	12 - 14	1	●		
SE	300	Enduro 3.0i (4T)	10 - 11	1	●		
SE	300	Enduro 3.0i (4T)	12 -	1	●		
SE	300	F / F-R	14 -	1	●		
SE	300	i / iR	12 - 13	1	●		
SE	300	i-F	13	1	●		
	450	Enduro 4.5i (4T)	04 - 10	1	●		
SE	450	F / F-R	14 -	1	●		
SE	450	i / iR	12 - 13	1	●		
	450	SM 4.5i F (Supermotard)	04 - 10	1	●		
	510	Enduro 5.1i F	07 - 10	1	●		
SE	510	iR	12 - 13	1	●		
	510	SM 5.1i F Supermotard	07	1	●		
SWM							
	300	R	15 -	1	●		
TM							
	80	(Big Wheel)	02 - 04	1	●		
	80	Cross	96 - 01	1	●		
	80	Enduro	96 - 00	1	●		
	80	Junior Cross	05 - 07	1	●		
	80	Junior Cross (Small Wheel)	02 - 04	1	●		
	80	Minicross / Junior	96 - 00	1	●		
MX	85	JR	02 - 10	1	●		
	85	(Big Wheel)	02 - 04	1	●		
	85	Cross	96 - 01	1	●		
	85	Junior Cross	05 - 07	1	●		
	85	Junior Cross (Small Wheel)	02 - 04	1	●		
	85	Minicross / Junior	96 - 00	1	●		
	100	(Big Wheel)	02 - 04	1	●		
	100	Junior Cross	05 - 07	1	●		

1 - 2 = Nombre de jeux avant / Number of front sets / Anzahl Sets / Numero blister / Numero des juegos
L = Gauche / Left / Links / Sinistra / Izquierda - R = Droite / Right / Rechts / Destra / Derecha

2352 suite

Street	Sport	Racing	Enduro	MX	Off-road Racing	ATV
A3+ RX3	XBK5		EN10	MX10	X59	ATV1

TM					
	100	Junior Cross (Small Wheel)	02 - 04	1	●
EN	125	Enduro (2T)	01 - 10	1	●
MX	125	(2T)	01 - 10	1	●
	125	Cross	95 - 00	1	●
	125	Enduro	95 - 00	1	●
EN	144	(2T)	08 - 10	1	●
MX	144	(2T)	08 - 10	1	●
EN	250	Enduro (2T)	01 - 10	1	●
EN	250	F Enduro (4T)	04 - 10	1	●
EN	250	Fi	10	1	●
MX	250	(2T)	01 - 10	1	●
MX	250	(4T) Cross	02 - 10	1	●
MX	250	Fi (4T)	10	1	●
	250	Cross	95 - 00	1	●
	250	Enduro	95 - 00	1	●
EN	300	Enduro (2T)	01 - 10	1	●
MX	300	(2T)	01 - 10	1	●
	300	Cross	95 - 00	1	●
	300	Enduro (2T)	95 - 00	1	●
MX	400	(4T) Cross	02 - 03	1	●
	400	Cross (4T)	95 - 00	1	●
EN	450	F (4T)	04 - 10	1	●
MX	450	F (4T)	04 - 10	1	●
EN	530	F (4T)	04 - 10	1	●
MX	530	F	05 - 10	1	●
	530	Cross (4T)	98 - 00	1	●
TRIUMPH					
	1200	Bonneville Speedmaster	18 -	2	●
VERTEMATI					
SR	450	Motard Racing	04 -	1	●

VERTEMATI					
C	500	Cross	02 -	1	●
E	500	Enduro	02 -	1	●
S	501	E Motard	04 -	1	●
S	501	Supermoto	01 -	1	●
S	570	E Motard	03 -	1	●
SR	600	Motard Racing	04 -	1	●
VOR					
EN	400		00 -	1	●
MX	400		00 -	1	●
EN	450		02 -	1	●
MX	450		02 -	1	●
EN	530		03 -	1	●
MX	530		03 -	1	●
YAMAHA					
YZF	125	R	08 - 13	1	●
TT	600	E	94 - 01	1	●
TT	600	E	94 - 01	1	●
TT	600	E (Belgarda)	94 - 95	1	●
TT	600	E (Belgarda)	94 - 95	1	●
TT	600	K (Belgarda)	93 - 95	1	●
TT	600	K (Belgarda)	93 - 95	1	●
TT	600	K (From 4GV 003404)	95 - 96	1	●
TT	600	K (From 4GV 003404)	95 - 96	1	●
TT	600	R (5CH1 / 5CH2 / 5CH3)	97 - 02	1	●
TT	600	R (5CH1 / 5CH2 / 5CH3)	97 - 02	1	●
TT	600	RE (5CH5)	04	1	●
TT	600	RE (5CH5)	04	1	●
XT	660	Z Ténéré	08 -	2	●

2353

Street	Sport	Racing	Enduro	MX	Off-road Racing	ATV
S4	RX3				X59	

Dim. / Size

78 mm
41.3 mm
9 mm

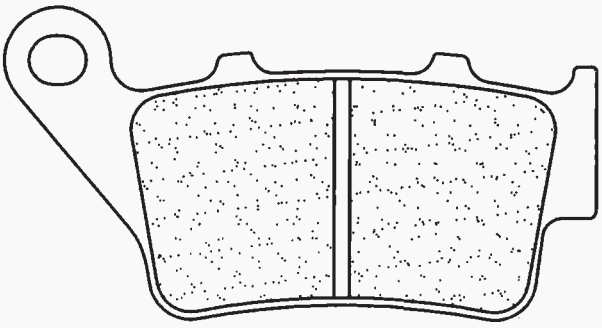

ALFER				
VRE	125		00 -	●
VR	250	All models	99 -	●
VR	250	Supermotard	99 -	●
APRILIA				
	650	Pegaso Factory	07 -	●
	650	Pegaso i.e	01 -	●
	650	Pegaso i.e TTR	04 -	●
	650	Pegaso Strada	05 -	●
	650	Pegaso Trail	06 -	●
SMV	750	Dorsoduro	08 - 17	●
SMV	750	Dorsoduro Factory	10 - 17	●
	750	Shiver	07 - 17	●
	750	Shiver GT	09 - 17	●
NA	850	Mana	07	●
SMV	900	Dorsoduro	18 -	●
SL	900	Shiver	18 -	●
ETV	1200	Caponord	13 -	●
ETV	1200	Caponord Rally	15 -	●
SMV	1200	Dorsoduro	11 - 12	●
SMV	1200	Dorsoduro ATC/ABS	11 -	●
BENELLI				
BX	449	Cross	07 -	●
BX	449	Supermotard	08 -	●
	505	Enduro	08 -	●

BETA				
	125	Jonathan	99 -	●
	350	Euro	99 -	●
	350	Jonathan	02 -	●
BMW				
	125	C1	00 -	●
	200	C1	02 -	●
G	313	310 R	16 -	●
G	313	310 GS	18 -	●
F	650	CS Scarver	02 - 06	●
F	650	Funduro	94 - 00	●
F	650	GS	08 -	●
F	650	GS Dakar	01 - 07	●
F	650	GS, Rallye	01 - 07	●
F	650	Strada	97 -	●
G	650	Xchallenge	07 -	●
G	650	Xcountry	07 -	●
G	650	Xmoto	07 -	●
F	700	GS	13 -	●
F	800	GS	08	●
F	800	GT	13 - 17	●
F	800	R	09 - 14	●
F	800	R	15 -	●
F	800	S	06 -	●
S	1000	R	14 -	●
S	1000	RR	09 - 14	●
S	1000	RR	15 -	●
S	1000	RR HP4	12 -	●
S	1000	RR HP4 Race	18 -	●
BORILE				
B	500	CR	02 -	●
B	500	MT	02 -	●
CCM				
MX	450		08 -	●
	604	DS Supermoto	99 - 01	●
	604	RS Roadster	01	●
	644	DS Supermoto	02 -	●
	644	RC 30	02 -	●

1 - 2 = Nombre de jeux avant / Number of front sets / Anzahl Sets / Numero blister / Numero des juegos
L = Gauche / Left / Links / Sinistra / Izquierda - R = Droite / Right / Rechts / Destra / Derecha

2353 suite

Street	Sport	Racing	Enduro	MX	Off-road Racing	ATV
S4	RX3				X59	

DUCATI					
	800	Scrambler (All models)	15 -		●
	400	Scrambler Sixty2	17 -		●
	797	Monster / +	17 -		●
	803	Scrambler Cafe Racer / Desert Sled	17 -		●
	1000	Paul Smart LE	06 -		●
FACTORY					
YR	250		99 -		●
GAS GAS					
	125	Enducross	93 - 96		●
EC	125		97 - 99		●
EC	200		99		●
EC	250		97 - 99		●
MC	250		97 - 99		●
EC	300		99		●
HIGHLAND					
	450	MX	06 -		●
	950	Outback V2	99 -		●
	950	V2 Motard	00 -		●
HONDA					
CB	500		97 - 03		●
NX	500	Dominator (Austria)	97 -		●
NX	650	Dominator	97 -		●
SLR	650		97 -		●
	650	Vigor	99 -		●
HUSABERG					
FC	350		95 - 99		●
FC	400		99 - 02		●
FE	400	S - E	98 - 03		●
FS	400	e / c SM	01 - 03		●
FC	450		98 - 03		●
FE	450	4	06 - 08		●
FS	450	e / c SM	04 -		●
FX	450		03 -		●
FC	470	E	01 - 02		●
FX	470	E	01 - 02		●
FC	501		98 - 01		●
FE	501	e SM	00		●
FE	501	S - E	98 - 04		●
FC	550		01 -		●
FE	550	E	06 - 08		●
FC	600	Supermotard	98 - 01		●
FE	600	e SM	00		●
FE	600	FE S - E - R	98 - 02		●
FE	650	E	06 - 08		●
FS	650	e / c SM	01 -		●
HUSQVARNA					
CR	125		96 - 04		●
SM	125	S	00 - 05		●
SM	125	S	06		●
SM	125		98 - 99		●
TE	125	(4T)	11 - 13		●
WR	125		97 -		●
WRE	125	SM	99 -		●
WRE	125		96 -		●
CR	250		97 - 04		●
TC	250		02 - 03		●
TE	250	(4T)	02 - 05		●
WR	250		97 -		●
WR	300	(2T)	09 - 13		●
TE	350		96 -		●
WR	360		97 -		●
SM	400	R	02		●
TE	400		01 -		●
	401	Vitpilen	17 -		●
	401	Svartpilen	17 -		●
TE	410		97 -		●
SM	450	R	03 - 04		●
SM	450	R	05		●
TC	450		02 - 03		●
TE	450		03 - 05		●
SM	510	R	05		●
TC	510		02 - 03		●
TE	510		02 - 03		●
TE	510		04 - 05		●
SM	570	Nox	01 - 03		●
SM	570	R	01 - 05		●
TC	570		01 -		●
TE	570		01 -		●
LT	610	E	99 -		●

HUSQVARNA					
SM	610	SM / SMS	98 -		●
TC	610	Cross	97 -		●
TE	610	E	06		●
TE	610		97 -		●
SMR	630		04 - 05		●
TE	630		10 -		●
TR	650	Strada	13 -		●
TR	650	Terra	13 -		●
	690	701 Vitpilen	18 -		●
SM	701	Supermoto	15 -		●
	900	Nuda	11 -		●
	900	Nuda R	11 -		●
HYOSUNG					
RX	450	SM	08 -		●
INDIAN					
	1000	Scout Sixty	17 -		●
KRAM-IT					
GS	250		97 -		●
MX	250		97 -		●
SM	250		00 -		●
SMR	250		00 -		●
KTM					
EXC	125	Enduro	99 - 03		●
LC2	125		99 -		●
RC	125		14 -		●
SX	125	SM	00 -		●
SX	125		96 - 03		●
	125	Duke	11 -		●
	125	Euro Trail	96 -		●
	125	Sting	97 -		●
EXC	200	Enduro	99 - 03		●
RC	200		14 -		●
SX	200		02		●
	200	Duke	12 -		●
EXC	250	Enduro / Enduro (4T)	99 - 03		●
SX	250		96 - 02		●
EXC	300	Enduro	99 - 03		●
MX	360		96 - 97		●
SX	360		96 - 97		●
XC	360		96 - 97		●
EXC	380	Enduro	98 -		●
MX	380		98 -		●
SX	380		98 - 02		●
XC	380		98 -		●
RC	390		14 -		●
	390	Duke	13 -		●
EXC	400	Racing	00 - 03		●
LC4-E	400	Enduro	99 -		●
SC	400	Supercompetition	96 - 99		●
SX	400	Racing	00 - 02		●
SXC	400	Tiainen Replica	97 -		●
EXC	450		03		●
	450	Rally	11 -		●
EXC	520	Racing	00 - 02		●
SX	520	Racing	00 - 02		●
EXC	525	Racing	03		●
MXC	525	Desert	03 - 04		●
SX	525	Racing	03		●
SXC	540	Tiainen Replica	99 - 00		●
EGS	620	Adventure / Rallye / EGS-E	99		●
EGS	620	Enduro / EGS-E	96 - 99		●
LC4	620	SC Supermoto	00		●
LC4	620	Supercompetition	96 - 00		●
LC4	620	SX	95 - 99		●
LC4	625	SC Supermoto	02 - 04		●
SXC	625		03 - 04		●
	625	SMC	05 - 06		●
LC4	640	Adventure	01 - 02		●
LC4	640	Adventure	03 - 07		●
LC4	640	Adventure	01 - 02		●
LC4	640	Adventure (2 sets)	03 - 07		●
LC4	640	Adventure R	00		●
LC4	640	Adventure R	00		●
LC4	640	E Enduro	99 -		●
LC4-E	640	Supermoto	99 - 06		●
SMC	640	LC4	05		●
	640	Duke II	99 - 07		●

1 - 2 = Nombre de jeux avant / Number of front sets / Anzahl Sets / Numero blister / Numero des juegos
L = Gauche / Left / Links / Sinistra / Izquierda - R = Droite / Right / Rechts / Destra / Derecha

2353 suite

Street	Sport	Racing	Enduro	MX	Off-road Racing	ATV
S4	RX3				X59	

KTM				
LC4	660	Rally	01 -	●
LC4	660	SM Factory Replica	02 -	●
	660	SMC	03 - 04	●
	660	SMC	05 - 06	●
	690	Duke	08 - 11	●
	690	Duke ABS	12 -	●
	690	Duke R	10 - 11	●
	690	Duke R	13 - 14	●
	690	Enduro	08 -	●
	690	Enduro R	09 -	●
	690	SM	07 - 09	●
	690	SMC	08 - 10	●
	690	SMC R	12 - 14	●
	690	SMR	07 - 09	●
	790	Duke	18 -	●
LC-8	950	Adventure	02 -	●
	950	Duke	03 -	●
	990	Super Duke	05 -	●
	990	Super Duke R	09 -	●
MAICO				
	250	Enduro	99 -	●
	250	Motocross	99 -	●
	500	Enduro	99 -	●
	500	Motocross	99 -	●
	500	Supermotard	99 -	●
MONTESA				
	80	Cross	96 -	●
	125		96 -	●
	250	E	95 -	●
	320	Cota	96 -	●
PRAGA				
ED	250		99 -	●
CD	610		99 -	●
ROYAL ENFIELD				
	535	Continental GT	14 -	●
TM				
	80	(Big Wheel)	02 - 04	●
	80	Cross	96 - 01	●
	80	Enduro	96 - 00	●
	80	Junior Cross (Small Wheel)	02 - 04	●
	85	(Big Wheel)	02 - 04	●
	85	Cross	96 - 01	●
	85	Junior Cross (Small Wheel)	02 - 04	●
	100	(Big Wheel)	02 - 04	●
	100	Junior Cross (Small Wheel)	02 - 04	●
	125	Cross	95 - 00	●
	125	Enduro	95 - 00	●

TM				
	250	Cross	95 - 00	●
	250	Enduro	95 - 00	●
	300	Cross	95 - 00	●
	300	Enduro (2T)	95 - 00	●
	400	Cross (4T)	95 - 00	●
	530	Cross (4T)	98 - 00	●
TRIUMPH				
	675	Street Triple R	13 - 14	●
	675	Daytona R (Brembo Rad.cal)	13 -	●
	765	Street Triple S	17 -	●
	765	Street Triple R	17 -	●
	765	Street Triple RS	17 -	●
VERTEMATI				
SR	450	Motard Racing	04 -	●
C	500	Cross	02 -	●
E	500	Enduro	02 -	●
S	501	E Motard	04 -	●
S	501	Supermoto	01 -	●
S	570	E Motard	03 -	●
SR	600	Motard Racing	04 -	●
VOR				
EN	400		00 -	●
MX	400		00 -	●
SM	400		00 - 02	●
EN	450		02 -	●
MX	450		02 -	●
SM	450		02	●
SM	500		00 - 02	●
EN	530		03 -	●
MX	530		03 -	●
SM	530		02 -	●
YAMAHA				
WR	125	R	09 -	●
WR	125	X Supermotard	09 -	●
TT	600	E	94 - 01	●
TT	600	E	94 - 01	●
TT	600	K (From 4GV 003404)	95 - 96	●
TT	600	K (From 4GV 003404)	95 - 96	●
TT	600	R (5CH1 / 5CH2 / 5CH3)	97 - 02	●
TT	600	R (5CH1 / 5CH2 / 5CH3)	97 - 02	●
TT	600	RE (5CH5)	04	●
TT	600	RE (5CH5)	04	●
XT	660	R	04 -	●
XT	660	X Supermotard	04 -	●
XT	660	Z Ténéré	08 -	●
MT-03	660		06 -	●

2360

Street	Sport	Racing	Enduro	MX	Off-road Racing	ATV
S4	A3+					

YAMAHA					
XT	400	Artesia	91 -	1	●
XT	600	E / K	90 - 03	1	●
XTZ	660	Ténéré	91 - 98	1	●

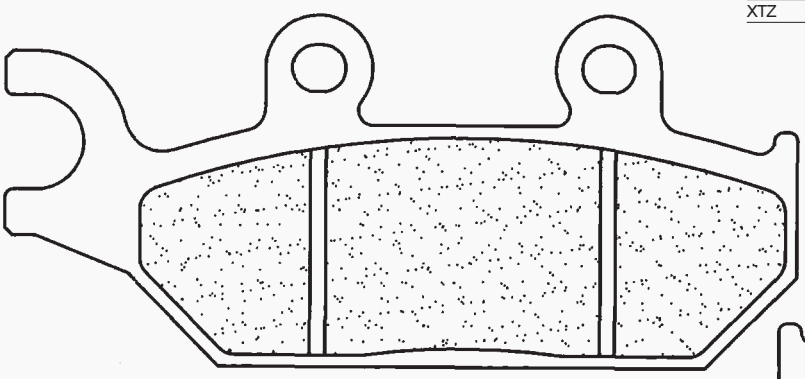

Dim. / Size
104.2 mm
46.1 mm
10 mm

Dim. / Size
88 mm
46.1 mm
10 mm

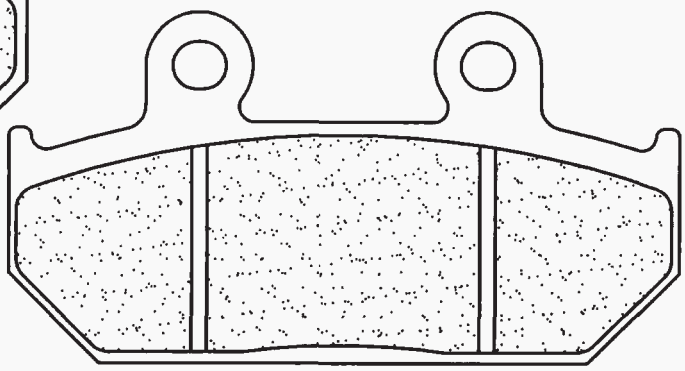

1 - 2 = Nombre de jeux avant / Number of front sets / Anzahl Sets / Numero blister / Numero des juegos
L = Gauche / Left / Links / Sinistra / Izquierda - R = Droite / Right / Rechts / Destra / Derecha

Street	Sport	Racing	Enduro	MX	Off-road Racing	ATV

S4 A3+ XBK5 C60

2361

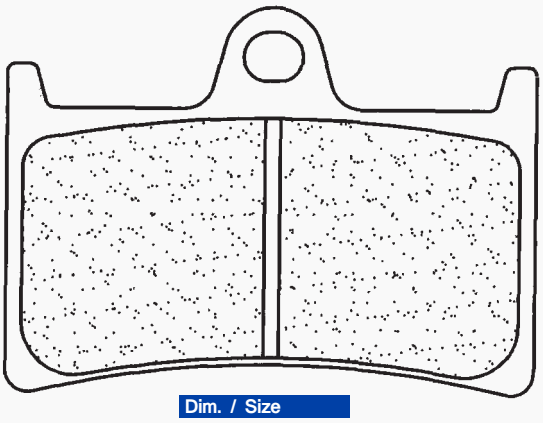

Dim. / Size

69.4 mm
50.9 mm
8.7 mm

YAMAHA

TZR	125	R (4FL)	97 - 98	1	●
FZR	250	R	89 -	2	●
R1-Z	250		90 -	1	●
TZ	250		97 -	2	●
TZR	250	/ SP / R / RS / SPR	89 - 96	2	●
FZR	400	RR (3TJ1 / 4DX)	89 - 92	2	●
FZR	400	RR SP (3TJ1 / 4DX)	91 - 94	2	●
XJR	400		02 -	2	●
FZ6	600	N / Fazer S2	07 - 09	2	●

YAMAHA

FZ6	600	N / Fazer S2 ABS	08	2	●
FZS	600	Fazer	98 - 03	2	●
YZF	600	R Thunder Cat	96 - 03	2	●
YZF	600	R6	99 - 02	2	●
YZF	600	R6	03 - 05	2	●
YZF	600	R6	10 -	2	●
YZF	600	R6	06 - 09	2	●
MT-07	700		14 -	2	●
XSR	700		16 -	2	●
	700	Tracer	16 -	2	●
YZF	750	R7 (OW02)	99 - 01	2	●
FZ8	800		10 -	2	●
FZ8S	900	Fazer	10 -	2	●
MT-09	900	Tracer	15 -	2	●
MT-09	850		14 -	2	●
TDM	900	ABS	05 -	2	●
TDM	900		02 -	2	●
FZ-1	1000	N / Fazer	06 -	2	●
FZ-1	1000	N / Fazer ABS	08 -	2	●
FZS	1000	Fazer	01 - 05	2	●
MT-10	1000	/ SP	16 -	2	●
YZF	1000	R Thunder Ace	96 - 01	2	●
YZF	1000	R1	98 - 01	2	●
YZF	1000	R1	02 - 03	2	●
YZF	1000	R1 / R1 M	15 -	2	●
YZF	1000	R1 / R1 SP	04 - 06	2	●
BT	1100	Bulldog	02 - 06	2	●
XT	1200	Z Super Ténéré (ABS/UBS)	10 - 13	2	●
XT	1200	Z/ZE Super Ténéré (ABS/UBS)	14 -	2	●
FJR	1300	/ ABS	03 - 05	2	●
FJR	1300		01 - 02	2	●
XJR	1300	/ SP	99 - 01	2	●
XJR	1300	Racer	15 -	2	●
XJR	1300		02 - 14	2	●
MT-01	1700	(4 piston caliper)	05 - 06	2	●
XV	1700	A / PC Road Star	02 - 05	2	●
XV	1900	A Midnight Star	06 - 12	2	●

Street	Sport	Racing	Enduro	MX	Off-road Racing	ATV

A3+

2362

YAMAHA

GTS	1000	/ ABS	93 - 99	1	●

Dim. / Size

131.7 mm
81.8 mm
9.5 mm

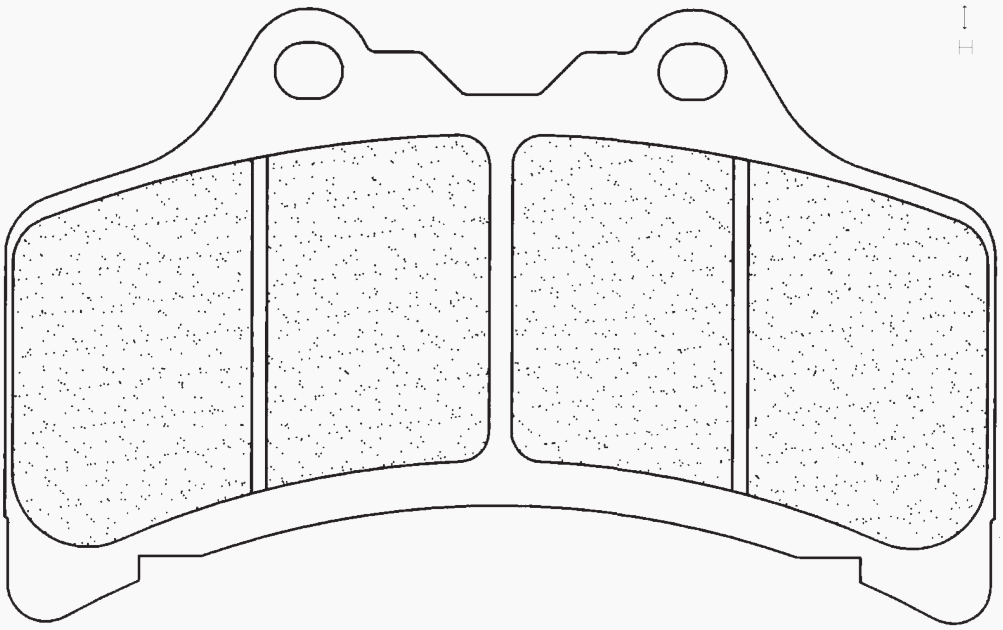

1 - 2 = Nombre de jeux avant / Number of front sets / Anzahl Sets / Numero blister / Numero des juegos
L = Gauche / Left / Links / Sinistra / Izquierda - R = Droite / Right / Rechts / Destra / Derecha

Street	Sport	Racing	Enduro	MX	Off-road Racing	ATV
A3+	XBK5					

2363

KAWASAKI				
ZXR	400 L1 / L2 / L3 / L4 / L5	91 - 02	2	●
SUZUKI				
RGV	250 Gamma T (RGVR 250 SP)	96 -	2	●

Dim. / Size

59 mm
43.6 mm
8 mm

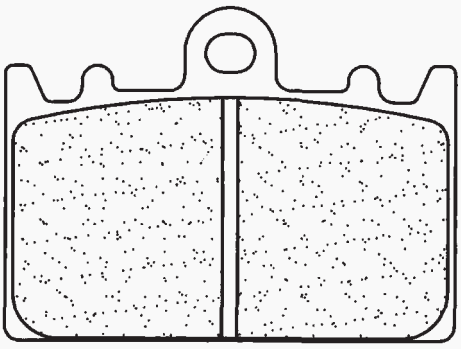

Street	Sport	Racing	Enduro	MX	Off-road Racing	ATV
A3+						

BUELL				
M2	1200 Cyclone	94 - 97	1	●
RS	1200		1	●
S1	1200 Lightning	94 - 97	1	●
S3	1200 Thunderbolt	94 - 97	1	●
S3T	1200 Thunderbolt	94 - 97	1	●
PERFORMANCE MACHINE				
Caliper 125x6 (Road)			1	●
Caliper 137x6 (Road)			1	●

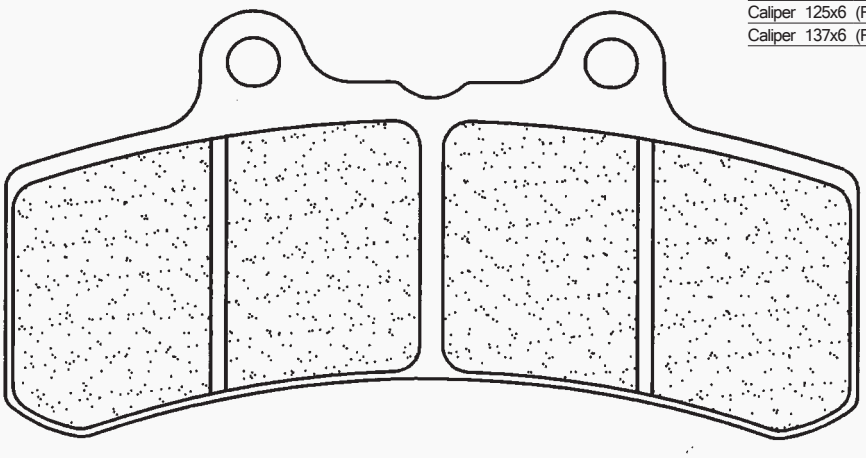

2369

Dim. / Size

112 mm
56.3 mm
10.9 mm

Street	Sport	Racing	Enduro	MX	Off-road Racing	ATV
RX3						

2370

HARLEY DAVIDSON			
XLH	883 Sportster	87 - 99	●
XLH	1100	87 - 88	●
XLH	1200 Series	88	●
XLH	1200 Sportster	90 - 99	●
FXDB	1340 Dyna Glide Daytona	91 - 99	●
	1340 Dyna Glide Daytona	91 -	●
FXDB	1340 Dyna Glide Sturgis	91 - 99	●
	1340 Dyna Glide Sturgis	91 -	●
FLHT	1340 Electra Glide Classic	87 - 99	●
FLHTC	1340 Electra Glide Classic	93	●
FLSTF	1340 Fat Boy	90 - 99	●
FLSTC	1340 Heritage Softail Classic	90 - 99	●
FLSTN	1340 Heritage Softail Nost.	93 - 99	●
FXLR	1340 Low Rider Custom	87 - 88	●
FXLR	1340 Low Rider Custom	93 - 99	●
FXRS	1340 Low Rider Sport	87 - 99	●
FXRS	1340 Low Rider Sport Edition	90 - 99	●
FXRS	1340 Low Rider Sport, Convert.	90 - 99	●
FXTZ	1340 Series	88	●
FXSTC	1340 Softail Custom	88 - 99	●
FXRT	1340 Sport Glide	90 - 99	●
FXSTS	1340 Springer Softail	90 - 99	●
FXDB	1340 Sturgis	91 - 99	●
FXR	1340 Super Glide	90 - 99	●
FXWG	1340 Wide Glide	82	●
FXE	1340	82	●
FXR	1340	87 - 88	●

Dim. / Size

104 mm
62 mm
9.9 mm

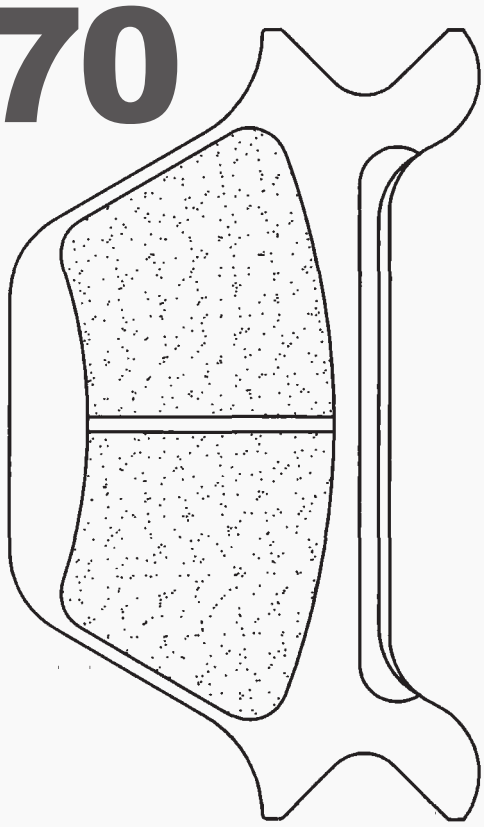

1 - 2 = Nombre de jeux avant / Number of front sets / Anzahl Sets / Numero blister / Numero des juegos
L = Gauche / Left / Links / Sinistra / Izquierda - R = Droite / Right / Rechts / Destra / Derecha

Street	Sport	Racing	Enduro	MX	Off-road Racing	ATV
S4 A3+ RX3			EN10 MX10		X59	

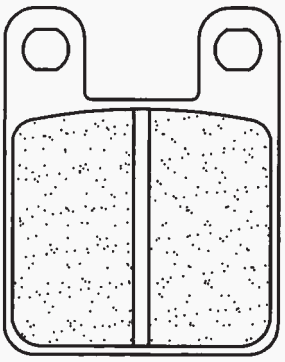

2377

Dim. / Size

36 mm
45.5 mm
6 mm

AJP					
PR4	200	Supermotard	04 -		●
MX	200		09 -		●
ALFER					
MC	80		87 -		●
APRILIA					
TX	240		86 -	1 ●	
	280	Climber / R	92	1 ●	●
TX	311		86	1 ●	
TXR	312	M	88	1 ●	●
TX	312	M	88	1 ●	●
ATK					
ATK	560		87 - 88		●
BENELLI					
BXK	125		88		●
BETA					
ST	50		97 -	1 ●	●
	50	Rev	00 -	1 ●	●
	50	Super Trial	92	1 ●	
	80	Evo Junior	10 -	1 ●	●
	80	Rev	00 -	1 ●	●
ALP	125	(4T)	00 - 05	1 ●	●
SR	125	34	89	1 ●	
TR	125	34 / 35	89 - 90	1 ●	●
TR	125	34	88	1 ●	
TRIAL	125		97 -	1 ●	
ALP	200	(4T)	00 - 05	1 ●	●
ALP	240		96 -	1 ●	
ALP	240		92	1 ●	
	240	Super Trial	92 -	1 ●	
ALP	250		92	1 ●	
ALP	250		97 -	1 ●	●
	250	Techno	96 - 98	1 ●	●
	250	Techno	99 -	1 ●	●
	250	Zéro	91 -	1 ●	
ALP	260		96 -	1 ●	
TR	260	Zéro / 34 / 35	89 - 92	1 ●	
	260	Zéro	91 -	1 ●	
BLATA					
	125	Motard	07 -		●
BREMBO					
P 32 A (Road)				2 ●	
CAGIVA					
	50	Mito	98 -		●
CPI					
	50	Supermoto / Supercross	03 -	1 ●	●
	125	Supermoto	07 -	1 ●	●
DERBI					
FDT	49	Coppa	85	1 ●	
FD	49	Yumbo	84 -	1 ●	
FD	49	Yumbo Extra	87 -	1 ●	
FDS	49		87 -	1 ●	
FDT	49		87 -	1 ●	
	75	GPR	89		●
	75	GPR Sport			●
	75	Sport Coppa	84 -	1 ●	
	80	GPR Cup	04 -		●
	125	GPR	05 -		●
	125	GPR Nude	05 -		●
	125	GPR Racing	05 -		●
	125	Senda R (4T)	04 -		●
	125	Senda X-Treme SM (4T)	04 -		●
FACTORY					
R12	50	Phantom Agua	06 -		●
FACTORY					
R14	50	Phantom Agua	04 -		●
R14	50	Phantom Aire	03 -	1 ●	
YR	125		06 -		●
FANTIC					
	50	Clubman		1 ●	●
	50	FC 01	98 -	1 ●	●
	50	Trial .5 .7 .9	89 -	1 ●	●
	80	Clubman		1 ●	●
	125	Clubman		1 ●	●
	125	Cruiser	98 -		●
	250	C@sta	98 -	1 ●	●
	250	Clubman		1 ●	●
	250	Coach	91 -		●
	250	K Roo	93 -	1 ●	●
	250	Section	96 -	1 ●	●
	305	Trial	89	1 ●	●
	307	Trial	91 -	1 ●	●
GAC					
	50	New T.T.	87	1 ●	
GARELLI					
	50	Sahel	91 -		●
GAS GAS					
TXT	50	Boy	04 -	1 ●	●
JT	125	R	96	1 ●	●
JT	125	X	97 -	1 ●	●
	125	Delta	91 -	1 ●	
	125	Pampera	97 - 03	1 ●	●
	125	Trial	91 -	1 ●	
JT	160	R	96	1 ●	●
TX	200		97 -	1 ●	●
	200	Pampera	99 -	1 ●	●
JT	250	Contact	93 - 94	1 ●	●
JT	250	R Tarres Replica	96	1 ●	●
JT	250	X	97 -	1 ●	●
TXT	250	Trial	89 -	1 ●	●
	250	Pampera	96 - 02	1 ●	●
JT	270	X	97 -	1 ●	●
TX	270	Contact	97 -	1 ●	●
JT	320	X	97 -	1 ●	●
TX	320	Contact	97 -	1 ●	●
	325	Halley PXC		1 ●	●
	327	Contact		1 ●	●
	327	Trial		1 ●	●
JT	370	R 37	96	1 ●	●
	370	Pampera	96 -	1 ●	●
	370	Pampera	98 -	1 ●	●
GILERA					
	125	GSM	00 -	1 ●	●
HRD					
	125	Supermotard	00 - 02		●
	125	Trail	00 - 02		●
HUSQVARNA					
	50	Husky Boy	01 -	1 ●	
	50	Racing	98 -	1 ●	
WRS	50		98 -	1 ●	
JCM					
	125	Europa	89	1 ●	●
	125	SR	89	1 ●	●
	240	Europa	89	1 ●	●
	240	SR	89	1 ●	●
	325	Europa	89	1 ●	
	325	SR	89	1 ●	●
KTM					
SX	60		99 -	1 ●	
SX	65		00 - 01	1 ●	
MH (MOTORHISPANIA)					
RYZ	125	Arena Enduro	05 -	1 ●	●
MONTESA					
	125	Cota	88	1 ●	●
	260	Evasion	92	1 ●	
	304	Cota	88	1 ●	●
	307	Cota	89	1 ●	●
	307	Cota Trial	88 -	1 ●	●
	309	Cota	89 -	1 ●	
	310	Cota	89 -	1 ●	
	311	Cota Trial	92	1 ●	
	314	Cota	95 -	1 ●	●
	315	Cota R	97 -	1 ●	●
	335	Cota	87 - 91	1 ●	●
M7	360	Enduro	85	1 ●	
MORBIDELLI					
	125	cc		2 ●	●

1 - 2 = Nombre de jeux avant / Number of front sets / Anzahl Sets / Numero blister / Numero des juegos
L = Gauche / Left / Links / Sinistra / Izquierda - R = Droite / Right / Rechts / Destra / Derecha

Street	Sport	Racing	Enduro	MX	Off-road Racing	ATV
S4 A3+ RX3			EN10	MX10	X59	

2377 suite

PERFORMANCE MACHINE							
Caliper 125x2 = 0052-2100 (Road)				1	●		
Caliper 125x4S = 0052-2200 (Road)				2	●		
RIEJU							
MR	80	Cross	87	1	●		
MR	80	Enduro	87	1	●		
	125	MRX	02 - 08				●
	125	NKD	06 - 07				●
	125	RS2 (AJP caliper)	06 - 10				●
	125	SMX	02 - 07				●
	125	SMX (Cast wheel)	07 - 08				●
	125	Tango	06 - 10				●
	125	Tango pro	07 - 10				●
	250	Tango (All models)	08 - 10				●
SHERCO							
	80	Trial 0.8 (2T)	01 - 04	1	●		

SHERCO							
	125	City Corp (All models)	03 - 07				●
	125	Trial 1.25 (2T)	99 - 05	1		●	●
	200	Trial 2.0 (2T)	99 - 05	1		●	●
	250	Trial 2.5 (2T)	99 - 05	1		●	●
	290	Trial 2.9 (2T)	99 - 05	1		●	●
SIMSON							
	125	SM	01 -				●
SUZUKI							
DR	50	Big	89 -	1		●	
RMX	50		98 -	1		●	●
YAMAHA							
TZR	50		03 - 08				●
TY-Z	250	R	93 - 96	1		●	●
TY	250	R	91 - 92	1		●	
TY	250	R	93 - 94	1		●	●

Street	Sport	Racing	Enduro	MX	Off-road Racing	ATV
RX3						

2381

KAWASAKI						
EX	400	Ninja R	11 -	L		●
ZZR	500	(Austria)	93 -			●
ZR	550	B4 / B5 / Zephyr	93 - 99			●
ZR	550	Zephyr Germany	93 -			●
ZX6-R	600	E1-E5 Ninja	93 - 97			●
ZX6-R	600	Ninja (Rad.cal)	09 -			●
ZX6-R	600	Ninja (ZX600G)	98 - 02			●
ZX6-R	600	Ninja F1 / F2	95 - 97			●
ZX6-RR	600	Ninja (Rad.cal)	03 - 06			●
ZZR	600		93 - 95			●
ZX6-R	636	Ninja	02			●
ZX6-R	636	Ninja (Rad.cal)	03 - 06			●
ER-6	650	N/F	06 -	L		●
KLE	650	Versys	06 - 14	L		●
Z	750	S	05 - 06	L		●
Z	750		04 - 06	L		●
ZX9-R	900	Ninja	94 - 95			●
ZX9-R	900	Ninja	02 - 03			●
ZX9-R	900	Ninja / C Ninja	96 - 01			●
Z	1000	(Rad.cal)	14 -			●
Z	1000	(Rad.cal)	10 - 13			●
Z	1000	SX (Rad.cal)	11 - 13			●
Z	1000	SX (Rad.cal)	14 - 16			●
Z	1000		03 - 06			●
Z	1000	Performance MY	17 -			●
Z	1000	R Edition (Brembo)	18 -			●
Z	1000	SX Performance MY / Tourer	17 -			●
ZX10-R	1000	Ninja (Rad.cal)	04 - 07			●
ZX10-R	1000	Ninja (Rad.cal)	08 - 10			●
GPZ	1100	ABS	97 -	L		●
GPZ	1100		95 - 96	L		●

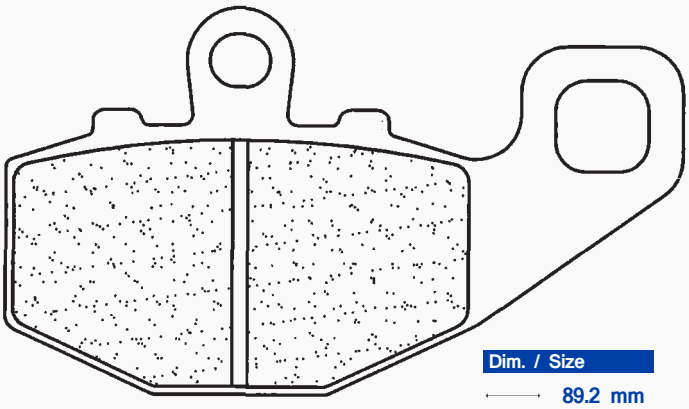

Dim. / Size
89.2 mm
51 mm
9.7 mm

Dim. / Size
68 mm
51 mm
9.7 mm

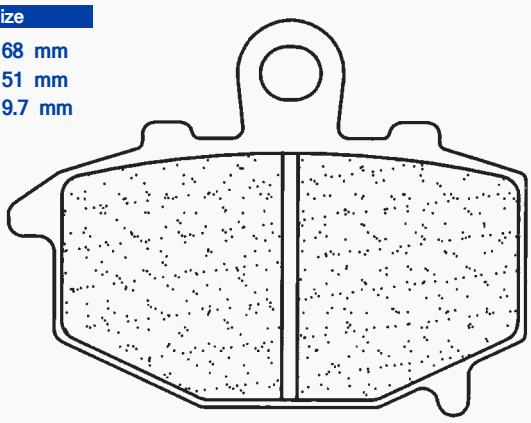

Dessins / Drawings / Zeichnungen / Disegni / Dibujos

1 - 2 = Nombre de jeux avant / Number of front sets / Anzahl Sets / Numero blister / Numero des juegos
L = Gauche / Left / Links / Sinistra / Izquierda - R = Droite / Right / Rechts / Destra / Derecha

Street	Sport	Racing	Enduro	MX	Off-road Racing	ATV

S4 A3+ RX3

2382

Dim. / Size

90 mm
49 mm
9 mm

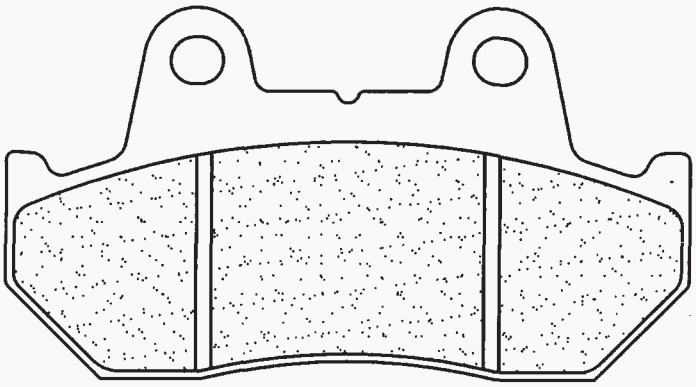

HONDA						
CB	125	T Superdream	82 -	1	●	
CBX	125	F	84 - 88	1	●	
CBX	250	S	88 -	1	●	
NS	250	R	85	2	●	
CM	400	C	81	1	●	
NS	400	R	85 - 87	2	●	
VF	400	Integra	86 -	1	●	●
CB	450	SC Nighthawk	83 - 86	1	●	
CX	500	Euro	82 -	2	●	●
CX	500	Turbo	82 -			●
CX	500		81 -	2	●	
GL	500	I	81 - 82	2	●	
GL	500		82	2	●	
CX	650	E	83 -	2	●	
VF	700	C Magna	85 - 86	2	●	
VF	700	F Interceptor	84 - 85	2	●	
CB	750	SC	82 - 83	2	●	
XLV	750	R	86 -	1	●	
CB	900	F / F2	81 - 84	2	●	
CBX	1000		81 - 82	2	●	
VF	1100	C	83 - 86	2	●	
VF	1100	S	84 - 85	2	●	

Street	Sport	Racing	Enduro	MX	Off-road Racing	ATV

S4 A3+ XBK5 C60

2383

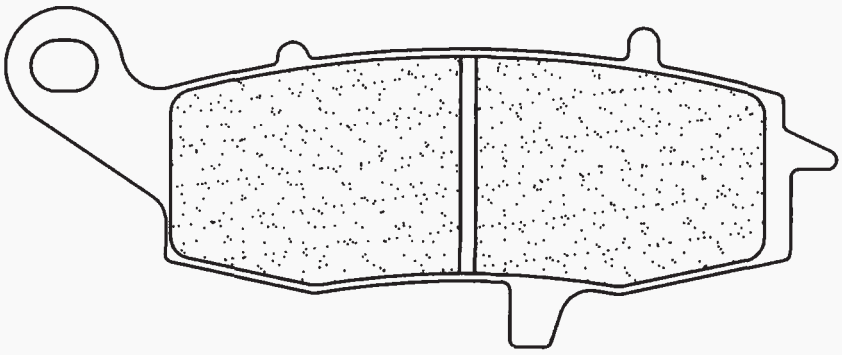

Dim. / Size

109.3 mm
44.4 mm
8.3 mm

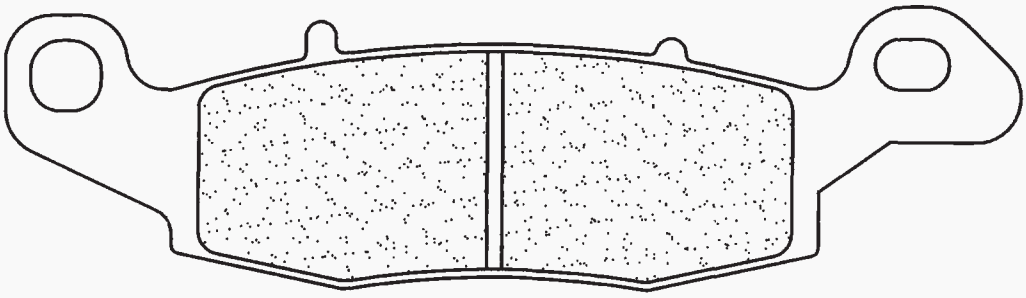

Dim. / Size

135.5 mm
37.4 mm
8.3 mm

KAWASAKI						
EX	400	Ninja R	11 -	1	L	●
ER-5	500		01 -	1		●
KLR	650	C1	98 -	1		●
KL	650	C1 (KLR)	95 -	1		●
ER-6	650	N/F	06 -	1	L	●
KLE	650	Versys	06 - 14	1	L	●
Z	750		04 - 06	1	L	●
Z	750	S	05 - 06	1	L	●
ZR	750	Zephyr	96 - 98	1	L	●
ZR-7	750	S	01 - 03	1	L	●
ZR-7	750		99 - 03	1	L	●
VN	800	Classic	98 -	1		●
VN	800	Drifter / Vulcan Drifter	99 - 02	1		●
VN	900	Custom	07 -	1		●
VN	900	Vulcan / Vulcan Classic	06 -	1		●
KLV	1000		04 - 05	1	L	●
GPZ	1100		95 - 96	1	L	●
GPZ	1100	ABS	97 -	1	L	●
ZR	1100	Zephyr	97 -	1	L	●
VN	1500	Classic	96 -	1		●

KAWASAKI						
VN	1500	Classic Fi	00 -	1		●
VN	1500	Classic Tourer	98 -	1	L	●
VN	1500	Classic Tourer Fi	00 -	1	L	●
VN	1500	Drifter	99 - 02	1		●
VN	1500	Vulcan Nomad	98 -	1	L	●
VN	1500	Vulcan Nomad Fi	00 -	1	L	●
VN	1600	Classic	03 -	1	L	●
VN	1700	Classic	09 -	1	L	●
VN	1700	Classic Tourer	09 -	1	L	●
SUZUKI						
GSF	250	VS / S Bandit	97 -	1		●
TU	250	Grass tracker / Big boy	00 - 01	1		●
GSF	600	S / N Bandit	00 - 04	1	L	●
GSX-F	600	FW/FX/FY/FK1 to FK6	98 - 06	1	L	●
DL	650	V-Strom	04 - 06	1	L	●
DL	650	V-Strom / ABS	07 - 14	1	L	●
DL	650	V-Strom XT / ABS	15 -	1	L	●
GSF	650	Bandit / Bandit S	05 - 06	1	L	●
GSF	650	Bandit ABS / Bandit S ABS	05 - 06	1	L	●

1 - 2 = Nombre de jeux avant / Number of front sets / Anzahl Sets / Numero blister / Numero des juegos
L = Gauche / Left / Links / Sinistra / Izquierda - R = Droite / Right / Rechts / Destra / Derecha

2383 suite

Street	Sport	Racing	Enduro	MX	Off-road Racing	ATV
S4 A3+	XBK5	C60				

SUZUKI

SFV	650	Gladius	09 -	1	L	●	
SV	650	N / S	99 - 02	1	L	●	
SV	650	N / S	03 - 16	1	L	●	
SV	650	N ABS / S ABS	07 - 15	1	L	●	
SV	650	(ABS)	16 -	1	L	●	
GSR	750		11 -	1	L	●	
GSX	750	W/X/Y/K1 Inazuma	97 - 03	1	L	●	
GSX-F	750	FW/FX/FY/FK1 to FK6	98 - 06	1	L	●	

SUZUKI

DR	800	ST Big	96 -	1		●	
DL	1000	V-Strom K2-K9	02 - 09	1	L	●	
GSX	1100	G	96 -	1	L	●	
C	1500	Intruder	05 - 09	1	L	●	
C90	1500	Boulevard	05 - 09	1	L	●	
M	1500	Intruder	09 -	1	L	●	
VL	1500	Intruder Legendary Classic	02 - 03	1	L	●	

2384

Street	Sport	Racing	Enduro	MX	Off-road Racing	ATV
S4 A3+ RX3	XBK5	C60				

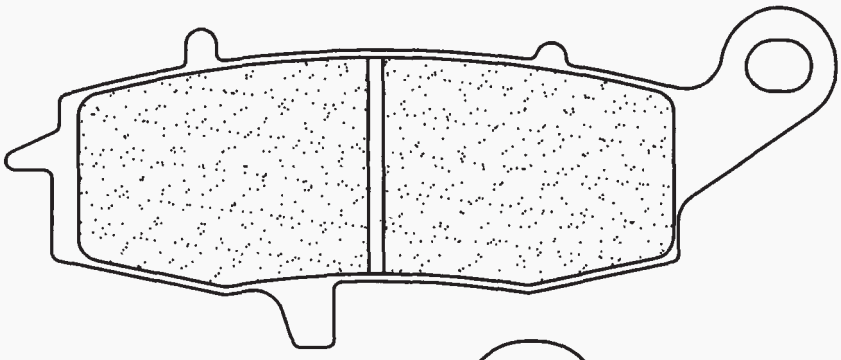

Dim. / Size

109.3 mm
44.4 mm
8.3 mm

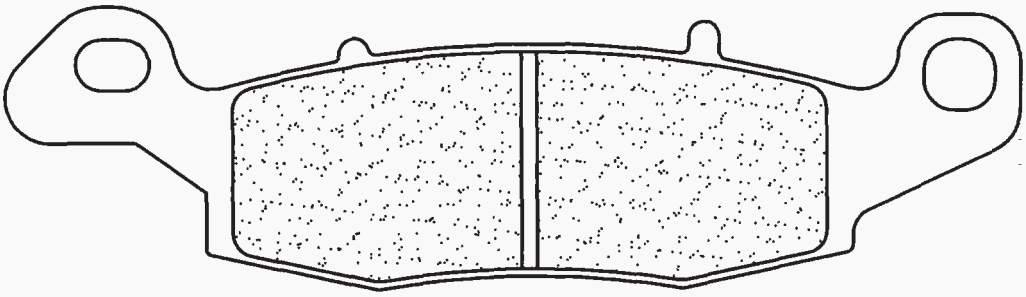

Dim. / Size

135.5 mm
37.4 mm
8.3 mm

KAWASAKI

KLE	650	Versys	06 - 14	1	R	●	
W	650		99 -	1		●	
Z	750	S	05 - 06	1	R	●	
Z	750		04 - 06	1	R	●	
ZR	750	Zephyr	96 - 98	1	R	●	
ZR-7	750	S	01 - 03		L		●
ZR-7	750	S	01 - 03	1	R	●	
ZR-7	750		99 - 03		L		●
ZR-7	750		99 - 03	1	R	●	
VN	800	Drifter / Vulcan Drifter	99 - 02				●
W	800		11 -	1		●	
VN	900	Custom	07 -				●
VN	900	Vulcan / Vulcan Classic	06 -				●
KLV	1000		04 - 05	1	R	●	
GPZ	1100	ABS	97 -	1	R	●	
GPZ	1100		95 - 96	1	R	●	
ZR	1100	Zephyr	97 -	1	R	●	
VN	1500	Classic Fi	00 -				●
VN	1500	Classic Tourer	98 -	1	R	●	
VN	1500	Classic Tourer Fi	00 -		L		●
VN	1500	Classic Tourer Fi	00 -	1	R	●	
VN	1500	Drifter	99 - 02				●
VN	1500	Mean Streak	02 - 03				●
VN	1500	Vulcan Nomad Fi	00 -	1	R	●	
VN	1500	Vulcan Nomad	98 -	1	R	●	
VN	1500	Vulcan Nomad Fi	00 -		L		●
VN	1600	Classic	03 -		L		●
VN	1600	Classic	03 -	1	R	●	
VN	1600	Mean Streak	04				●
VN	1600	Mean Streak	05 -				●
VN	1700	Classic	09 -		L		●
VN	1700	Classic	09 -	1	R	●	

KAWASAKI

VN	1700	Classic Tourer	09 -		L		●
VN	1700	Classic Tourer	09 -	1	R	●	
VN	1700	Voyager	09 -				●
M	1800	R2 Intruder	08 - 09				●
M	1800	RZ	07 - 10				●
VN	2000	/ Vulcan	04 -				●

SUZUKI

RV	125	Van Van	02 - 10	1		●	
RV	200	Van Van	02 - 03	1		●	
GSX	250	FX	02 - 05	1		●	
GS	500	F	04 - 08	1		●	
GS	500	E	96 - 03	1		●	
GSF	600	S / N Bandit	00 - 04	1	R	●	
GSX-F	600	FW/FX/FY/FK1 to FK6	98 - 06	1	R	●	
DL	650	V-Strom	04 - 06	1	R	●	
DL	650	V-Strom / ABS	07 - 14	1	R	●	
DL	650	V-Strom XT / ABS	15 -	1	R	●	
GSF	650	Bandit / Bandit S	05 - 06	1	R	●	
GSF	650	Bandit ABS / Bandit S ABS	05 - 06	1	R	●	
SFV	650	Gladius	09 -	1	R	●	
SV	650	N / S	99 - 02	1	R	●	
SV	650	N / S	03 - 16	1	R	●	
SV	650	N ABS / S ABS	07 - 15	1	R	●	
SV	650	(ABS)	16 -	1	R	●	
XF	650	Freewind	97 - 02	1		●	
GSR	750		11 -	1	R	●	
GSX	750	W/X/Y/K1 Inazuma	97 - 03	1	R	●	
GSX-F	750	FW/FX/FY/FK1 to FK6	98 - 06	1	R	●	
C	800	Intruder (VL 800 K5-K9/L0) (C800)	05 -	1		●	
C90	800	Boulevard (VL 800 K5-K9/L0) (C800)	05 -	1		●	
M	800	Intruder (VZ 800 K5-K9/L0) (M800)	05 -	1		●	

1 - 2 = Nombre de jeux avant / Number of front sets / Anzahl Sets / Numero blister / Numero des juegos
L = Gauche / Left / Links / Sinistra / Izquierda - R = Droite / Right / Rechts / Destra / Derecha

2384 suite

Street	Sport	Racing	Enduro	MX	Off-road Racing	ATV
S4 A3+	RX3	XBK5	C60			

SUZUKI							
M	800	Intruder Z (VZ 800 K9Z) (M800)	09 -	1		●	
M50	800	Boulevard	05 -	1		●	
S50	800	Boulevard	05 -	1		●	
VL	800	Intruder Volusia K1/K2/K3/K4	01 - 04	1		●	
VZ	800	Marauder	97 - 04	1		●	
DL	1000	V-Strom K2-K9	02 - 09	1	R	●	
GSX	1100	G	96 -	1	R	●	
C	1500	Intruder	05 - 09	1	R	●	
C	1500	T Intruder	13 -				●
C90	1500	Boulevard	05 - 09	1	R	●	
M	1500	Intruder	09 -	1	R	●	

SUZUKI							
M	1500	Intruder	09 -		L		●
VL	1500	Intruder Legendary Classic	02 - 03	1	R	●	
M	1600	Intruder	05 -				●
M95	1600	Boulevard	05 -				●
VZ	1600	Marauder	04				●
C	1800	R Intruder / RT Intruder	08 -				●
M	1800	R Intruder	06 - 09				●
M	1800	R Intruder Boss	14 -				●
M	1800	R2 Intruder	08 - 09				●
M	1800	RZ	07 - 10				●

2385

Street	Sport	Racing	Enduro	MX	Off-road Racing	ATV
RX3						

Dim. / Size

94 mm
32 mm
10 mm

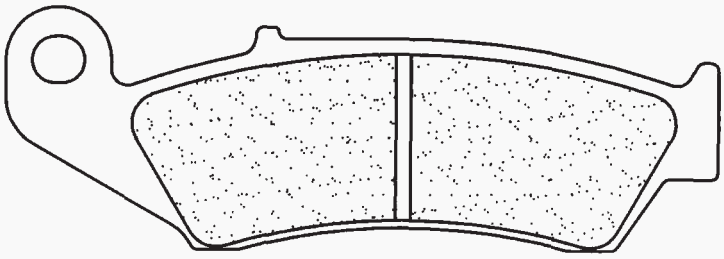

HONDA							
RVF	400	RR (NC35)	90 - 96				●
VFR	400	R NC24	87 -				●
VTR	400	R	90				●
RVF	750	RR (RC45)	94 -				●
VFR	750	R (RC 30)	88 - 93				●

2386

Street	Sport	Racing	Enduro	MX	Off-road Racing	ATV
A3+						

Dim. / Size

76.8 mm
53.8 mm
9.5 mm

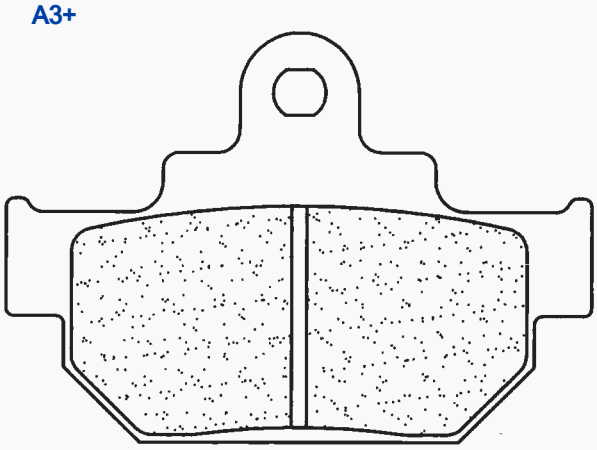

SUZUKI							
DR	500	S	89 -	1		●	
SP	600	F	85 - 87	1		●	
DR	600	RG/RH/RJ (SN41A) Djebel	86 - 88	1		●	
DR	600	RK (SN41A) Djebel	89	1		●	
DR	600	SF/SG/SH/SJ/SK (SN41A)	85 - 89	1		●	

2387

Street	Sport	Racing	Enduro	MX	Off-road Racing	ATV
S4 A3+				MX10	X59	

Dim. / Size

76.8 mm
53.8 mm
7.1 mm

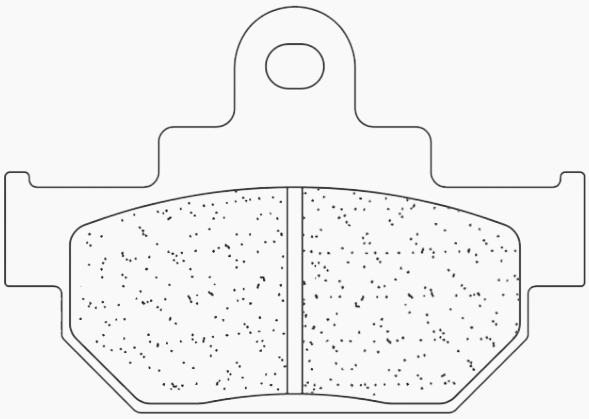

MAICO							
GM	250	Star	86 -	1		●	●
GP	250	E	87 -	1		●	●
GP	250	Motocross	87 -	1		●	●
GP	400	E	87 -	1		●	●
GP	400	Motocross	87 -	1		●	●
GM	500	Star	86 -	1		●	●
GP	500	Motocross	87 -	1		●	●
GP	500	E	87 -	1		●	●
GP	550		87 -	1		●	●
SUZUKI							
GZ	125	Marauder	98 - 10	1		●	
RM	125	F / G	85 - 86	1		●	
TU	125	XT / Super Classic	99 -	1		●	

1 - 2 = Nombre de jeux avant / Number of front sets / Anzahl Sets / Numero blister / Numero des juegos
L = Gauche / Left / Links / Sinistra / Izquierda - R = Droite / Right / Rechts / Destra / Derecha

2387 suite

Street	Sport	Racing	Enduro	MX	Off-road Racing	ATV
S4 A3+				MX10	X59	

SUZUKI					
VL	125	Intruder LC	00 - 08	1	●
GZ	250	/ Marauder	99 - 08	1	●
RM	250	F / G	85 - 86	1	●
TU	250	S/T/XS/XT/X-ST/XSV/XT-W (Volty)	97 - 00	1	●
TU	250	XV / XW	92 - 97	1	●

SUZUKI					
VL	250	Intruder	00 - 07	1	●
LS	400	Savage	87 -	1	●
RM	500		85 - 86	1	●
LS	650	P Savage	86 - 04	1	●
S40	650	Boulevard	05 -	1	●

2388

Street	Sport	Racing	Enduro	MX	Off-road Racing	ATV
S4			RX3			

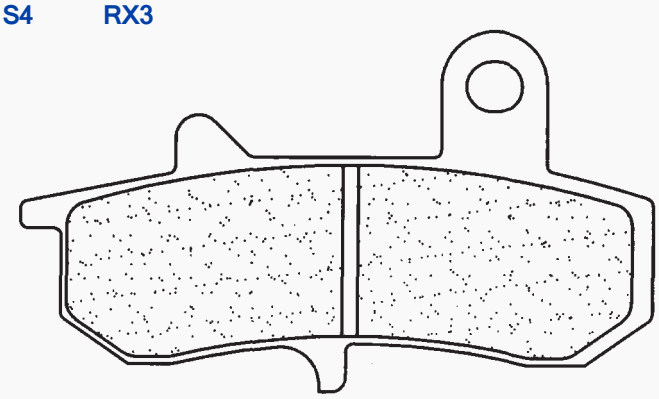

Dim. / Size
83.4 mm
47.8 mm
9.8 mm

SUZUKI				
RG	125	F Gamma	92 - 96	●
RG	125	Wolf	92 - 94	●
RG	200	Gamma	91 -	●
TV	200	Wolf	92 -	●
DR	600	RK (SN41A) Djebel	89	●
DR	650	R (SP41A) / RS (SP42A)	90 - 91	●
DR	650	R (SP44A/B)	92 - 93	●
DR	650	RSE (SP43A)	91 - 95	●
DR	750	SK Big	89 - 90	●
DR	800	SL (SR43A) Big	90	●

Dim. / Size
99.3 mm
39 mm
7.4 mm

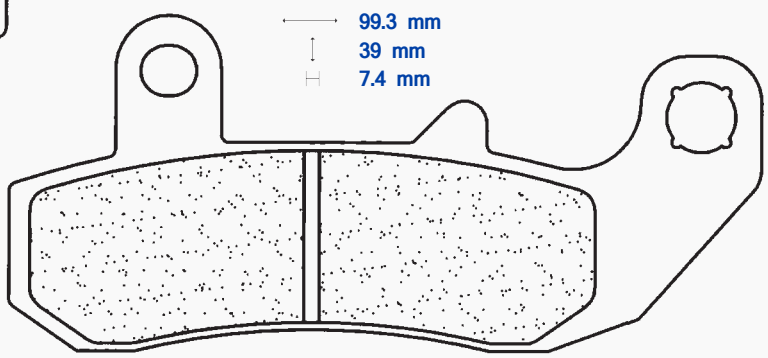

2389

Street	Sport	Racing	Enduro	MX	Off-road Racing	ATV
S4 A3+		RX3				

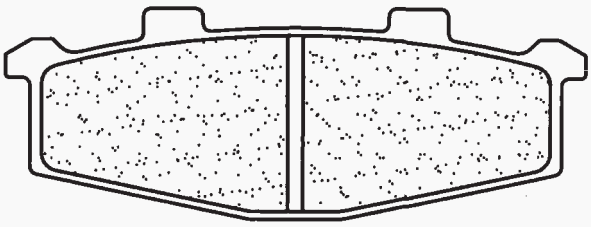

Dim. / Size
76.4 mm
27.5 mm
9.7 mm

KAWASAKI						
EX	250	R F2-F17 Ninja	88 - 07			●
GPX	250	R	88 -			●
KR1	250	S	90			●
KR1	250		88 - 89	2	●	●
ZXR	250	R	89	2	●	●
ZXR	250		90	2	●	●
GPX	400		87 -	2	●	
GPZ	400	R	89 -	2	●	
ZR	400	Xanthus (D1)	92 - 95	2	●	
ZX-4	400		88 - 89	2	●	●
EX	500	E1-E3	94 - 96	1	●	
GPZ	500	S E1-E10	94 - 04	2	●	
ZR	550	B1 / B3 / Zephyr	90 - 92			●
ZR	550	Zephyr Germany	93 -	2	●	
ZR	750	Zephyr	91 - 95			●
SUZUKI						
RGV	250	Gamma M / N / P / R / S	91 - 95			●
RGV	250	Gamma T (RGVR 250 SP)	96 -			●
GSX	1100	G	94 - 95			●

Dim. / Size
106.2 mm
38.9 mm
7.4 mm

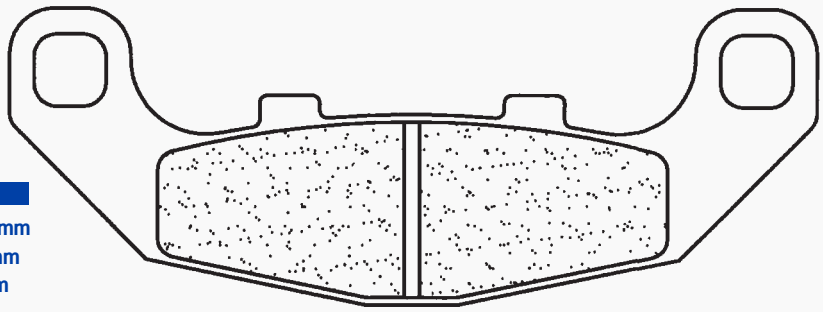

1 - 2 = Nombre de jeux avant / Number of front sets / Anzahl Sets / Numero blister / Numero des juegos
L = Gauche / Left / Links / Sinistra / Izquierda - R = Droite / Right / Rechts / Destra / Derecha

Street	Sport	Racing	Enduro	MX	Off-road Racing	ATV

RX3

2390

Dim. / Size

56.3 mm
52.5 mm
8.7 mm

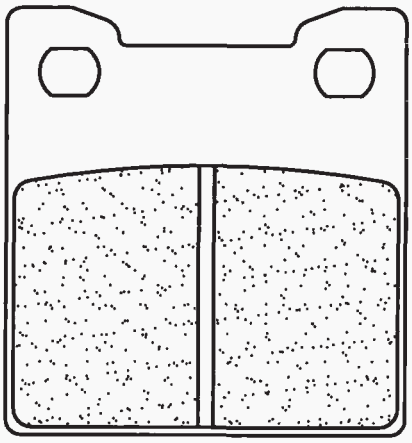

SUZUKI

RF	900	RR / RS / RS2	94 - 95	●

Street	Sport	Racing	Enduro	MX	Off-road Racing	ATV

S4 A3+

2391

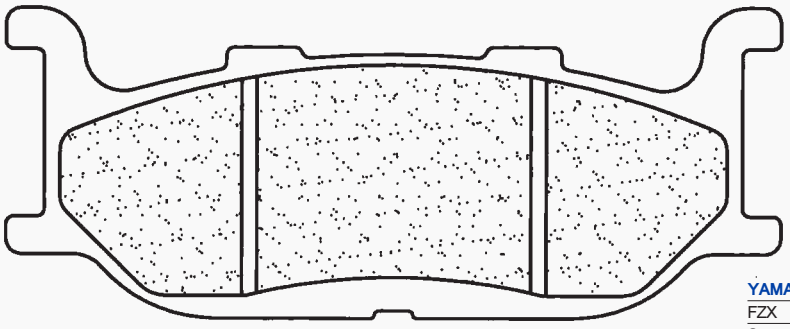

Dim. / Size

102.1 mm
40.9 mm
10 mm

YAMAHA

FZX	250	Zeal	91 - 92	1	●
SRV	250	(4DN1-6)	92 - 97	1	●
XJ	400	S Diversion	91 -	1	●
XVS	400	Drag Star	96 -	1	●
XV	535	Virago / S Virago	95 - 03	1	●
XJ	600	N / S Diversion	92 - 97	1	●
XVS	650	A Drag Star Classic	98 - 07	1	●
XVS	650	Drag Star	97 - 04	1	●
XV	750	Virago	94 - 97	2	●
XJ	900	S Diversion	94 - 03	2	●
SCR	950		17 -	1	●
XVS	950	A Midnight Star	09 -	1	●
XVS	950	Bolt / Bolt R	14 -	1	●
XV	1100	Virago	94 - 98	2	●
XVZ	1300	TF Venture Star	99 - 01	2	●
XV	1600	A Wild Star	99 - 04	2	●

Street	Sport	Racing	Enduro	MX	Off-road Racing	ATV

S4 A3+

2392

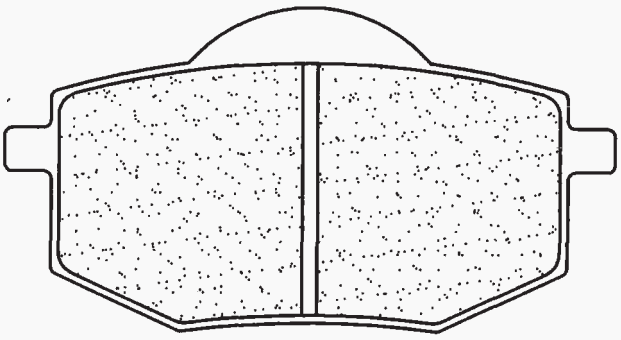

Dim. / Size

79 mm
42.5 mm
10 mm

YAMAHA

XV	250	Virago	91 - 92	1	●
XV	400	Virago	88 -	1	●
XV	535	Virago	88 - 94	1	●

1 - 2 = Nombre de jeux avant / Number of front sets / Anzahl Sets / Numero blister / Numero des juegos
L = Gauche / Left / Links / Sinistra / Izquierda - R = Droite / Right / Rechts / Destra / Derecha

Street	Sport	Racing	Enduro	MX	Off-road Racing	ATV

S4 A3+

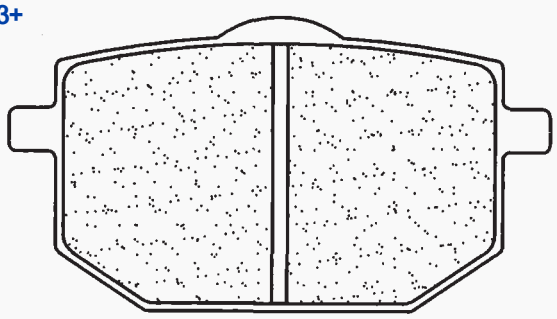

2393

Dim. / Size

71 mm
38.7 mm
10 mm

MOTO GUZZI					
NTX	750	90 -	1	●	
YAMAHA					
XT	600	87 - 89	1	●	
XT	600 Ténéré	85 - 88	1	●	
XT	600 Z Ténéré	88 - 90	1	●	

Street	Sport	Racing	Enduro	MX	Off-road Racing	ATV

S4 A3+ RX3 XBK5 C60

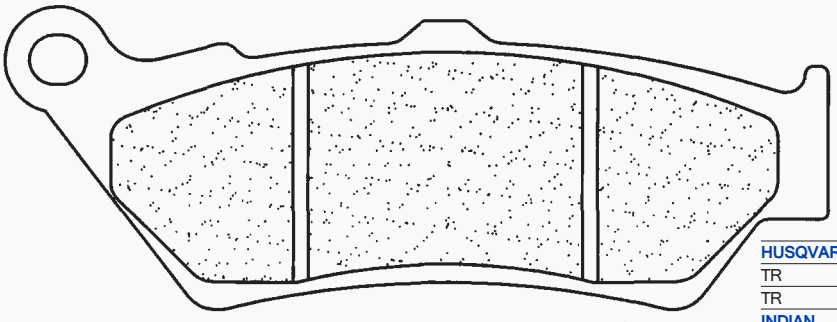

2396

Dim. / Size

108.5 mm
40.1 mm
7.7 mm

APRILIA					
	650 Moto 6.5	95 -	1	●	
	650 Pegaso	97 - 00	1	●	
	650 Pegaso i.e	01 -	1	●	
	650 Pegaso i.e TTR	04 -	1	●	
	650 Pegaso Trail	06 -	1	●	
ETV	1000 Caponord	01 - 06	2	●	
ETV	1000 Caponord Rally Raid	04 -	2	●	
BENELLI					
	500 Leoncino Trail	18 -	2	●	
BIMOTA					
DBX	1078	12 - 13	2	●	●
DBX	1100	12 - 14	2	●	●
BMW					
	125 C1	00 -	1	●	
	200 C1	02 -	1	●	
F	650 CS Scarver	02 - 06	1	●	
F	650 Funduro	94 - 00	1	●	
F	650 GS	08 -	1	●	
F	650 GS Dakar	01 - 07	1	●	
F	650 GS, Rallye	01 - 07	1	●	
F	650 Strada	97 -	1	●	
G	650 Xchallenge	07 -	1	●	
G	650 Xcountry	07 -	1	●	
F	700 GS	13 -	2	●	
F	800 GS	08	2	●	
HP2	1200 Enduro	06 -	2	●	
R	1200 GS	13			●
R	1200 GS / GS Adventure	14 -			●
R	1200 R / RS	15 -			●
R	1200 RT	14 -			●
K	1600 GT / GTL	11 -			●
K	1600 B	17 -			●
DUCATI					
	400 Scrambler Sixty2	17 -	1	●	
SportClassic	1000 GT	05 -	2	●	
SportClassic	1000 GT Touring	09 -	2	●	
SportClassic	1000 Sport / Biposto	07 -	2	●	
	1000 Paul Smart LE	06 -	2	●	
	1200 Diavel	11 -			●
	1200 Xdiavel / S	16 -			●
	1200 Diavel Titanium (ABS)	15 -			●
HONDA					
CB	500	97 - 03	1	●	
	650 Vigor	99 -	1	●	
NT	650 V Deauville	98 - 01	2	●	
NX	650 Dominator	97 -	1	●	
SLR	650	97 -	1	●	
HUSQVARNA					
TR	650 Strada	13 -	1	●	
TR	650 Terra	13 -	1	●	
INDIAN					
	1000 Scout Sixty	17 -	1	●	
KTM					
LC-8	950 Adventure	02 -	2	●	
	950 Superenduro	06 -	1	●	
	990 Adventure / R / S	06 - 12	2	●	
MOTO GUZZI					
	940 Bellagio / Custom	07 -			●
	1100 Aluminium	03 - 05			●
	1100 California (2 pin pads)	01 - 05			●
	1100 California EV (2 pin pads)	01 -			●
	1100 California Jackal (Single pin pad)	99 - 01			●
	1100 California Special (Single pin pad)	99 - 00			●
	1100 California Sport (2 pin pads)	01 - 02			●
	1100 California Vintage	06 - 10			●
	1100 Classic	06 - 09			●
	1100 Metal	02 - 03			●
ES	1100 Quota	99 - 01	2	●	
	1100 Titanium Handlebar Fairing	03 - 05			●
	1100 Touring	06 - 07			●
	1400 MGX-21	16 -			●
MOTO MORINI					
	1200 Granpasso	08 - 10	2	●	
	1200 GT	10	2	●	
	1200 Scrambler	10 - 13	2	●	
ROYAL ENFIELD					
	535 Continental GT	14 -	1	●	
TRIUMPH					
	1600 Thunderbird	09 - 13			●
	1700 Thunderbird Commander	14 -			●
	1700 Thunderbird Night Storm	15 -			●
	1700 Thunderbird LT	14 -			●
	1700 Thunderbird Storm	11 - 13			●
	2300 Rocket III	04 -			●
	2300 Rocket III Classic	07 -			●
	2300 Rocket III Roadster	10 -			●
	2300 Rocket III Touring	13 -			●
	2300 Rocket X	15 -			●
VICTORY					
Kingpin	1500 Tour	04 - 07			●
Kingpin	1500	04 - 07			●
Touring	1500 Cruiser	05 -			●
V92	1500 V92C Cruiser / Deluxe	98 - 03			●
V92	1500 V92SC Sport Cruiser	00 - 03			●
Hammer	1634 S	07 - 08			●
Hammer	1634	05 - 07			●
Vegas	1634 8-Ball	05 - 07			●
Vegas	1634 Arlen Ness / Jackpot	04 - 07			●
Vegas	1634	03 - 07			●
YAMAHA					
DT	125 X Supermotard	05 - 06	1	●	

1 - 2 = Nombre de jeux avant / Number of front sets / Anzahl Sets / Numero blister / Numero des juegos
L = Gauche / Left / Links / Sinistra / Izquierda - R = Droite / Right / Rechts / Destra / Derecha

2396 suite

Street	Sport	Racing	Enduro	MX	Off-road Racing	ATV
S4 A3+ RX3	XBK5	C60				

YAMAHA						
XT	660	R	04 -	1	●	

2398

Street	Sport	Racing	Enduro	MX	Off-road Racing	ATV
S4 A3+	XBK5	C60	EN10	MX10	X59	

Dim. / Size

67.7 mm
50.7 mm
7 mm

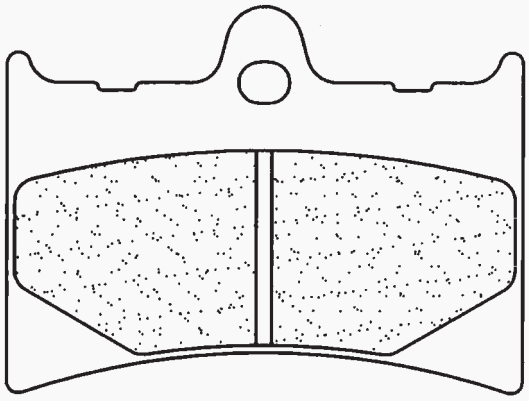

ALFER						
MC	125		88	1	●	
MC	250		88	1	●	
GR	250	Enduro	88	1	●	
GR	300	Enduro	88	1	●	
APRILIA						
AF 1	125	Europa / Futura	90 - 91	1	●	
AF 1	125	Replica / Sintesi	89 - 91	1	●	
RS	125	/ Extrema / Replica	93 - 98	1	●	
RS	125	R Piste	04 - 05	1	●	
RS	125		99 - 05	1	●	
	125	Sport Prot.	92	1	●	
	125	Tuono	04 -	1	●	
AF 1	250	Replica	90 -	1	●	
ASPES						
	125	Sintesi	88 -	1	●	
ATK						
ATK	250	CC / MX	91 - 92	1	●	
ATK	350	ES / CC / MX / STD	91 - 92	1	●	
ATK	406	CC / MX	91 - 92	1	●	
ATK	560		89 - 91	1	●	
ATK	604	ES / CC / MX / STD	91 - 92	1	●	
ATK	604	Quadracer	90 -	1	●	
ATK	604		91 -	1	●	
BENELLI						
	50	Devil	92	1	●	
	50	Spring	92	1	●	
	125	Jamo	89	2	●	
BX	125		89	1	●	
GILERA						
SP	125	01	90 -	1	●	
	125	Crono	92 -	1	●	
	125	CX	91 -	1	●	
	125	Freestyle	92 -	1	●	
	125	MX1 / MXR	89 -	1	●	
	125	SP 01	90	1	●	
	125	SP 02	90 -	1	●	
	600	Nordwest	91 -	2	●	
KTM						
MX	250	Enduro VC	87	1	●	●
EXC	350		87	1	●	●
GS	350		87	1	●	●
MX	350		87	1	●	●
	400	Enduro	87 -	1	●	●
MX	500		87	1	●	●
LC4	550		87 -	1	●	●
MX	550		87 -	1	●	●
EXC	600		87	1	●	●
LC4	600	Enduro	88 -	1	●	●
LC4	600		88 -	1	●	●
MC	600		88 -	1	●	●
MX	600		87	1	●	●
MOTO GUZZI						
	1000	Quota	92 - 97	2	●	

2399

Street	Sport	Racing	Enduro	MX	Off-road Racing	ATV
S4 A3+			EN10	MX10	X59	

Dim. / Size

78.9 mm
45.9 mm
9 mm

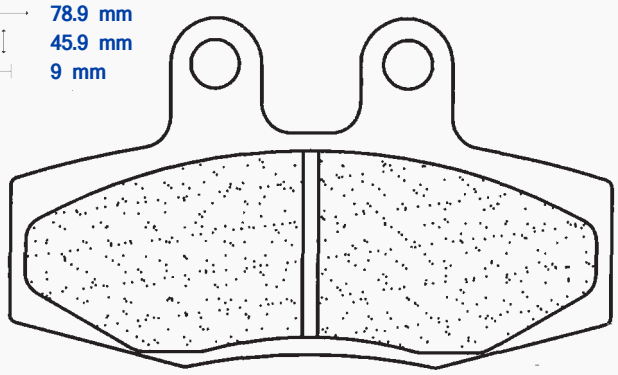

FANTIC						
	50	Extra SM	98 -	1	●	
	125	Extra SM	98 -	1	●	
KTM						
EXC	85		90	1	●	●
EXC	125		90	1	●	●
GS	125		88	1	●	●
MX	125		88	1	●	●
EXC	250		90	1	●	●
GS	250		88	1	●	●
MX	250		88	1	●	●
EXC	300		90	1	●	●
EXC	350		88 -	1	●	●
GS	350		88 -	1	●	●
MX	350		88	1	●	●
MX	500		88	1	●	●
EXC	600		88	1	●	●
MX	600		88	1	●	●
MAICO						
GP	250	All models	89	1	●	●
GP	350		93 -	1	●	●
GP	400	All models	89	1	●	●
GP	500	All models	89	1	●	●
	500		91	1	●	
	500		93 -	1	●	●

1 - 2 = Nombre de jeux avant / Number of front sets / Anzahl Sets / Numero blister / Numero des juegos
L = Gauche / Left / Links / Sinistra / Izquierda - R = Droite / Right / Rechts / Destra / Derecha

Street	Sport	Racing	Enduro	MX	Off-road Racing	ATV
S4 A3+			EN10 MX10			

2400

Dim. / Size

99.9 mm
47 mm
8.5 mm

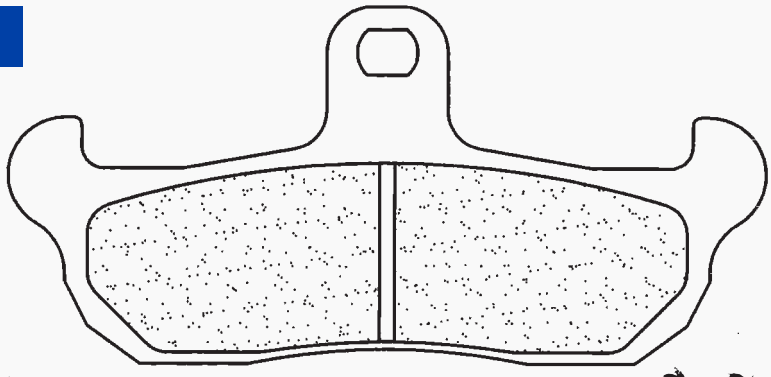

APRILIA					
	125	AF1 Replica	88 - 88	1	●
	125	Tuareg Rally	90 - 91	1	●
	125	Tuareg Wind	89 - 89	1	●
AF 1	125		87 -	1	●
RX	125		90 - 96	1	●
	350	Tuareg	88 - 89	1	●
	350	Tuareg Wind	89 - 89	1	●
	350	Tuareg Wind	90 -	1	●
	600	Pegaso	90 -	1	●
	600	Tuareg	88 -	1	●
	600	Tuareg Wind	90 -	1	●
CAGIVA					
WMX	50		89 -	1	●
	50	Supercity	93 -	1	●
	80	Super City	94 -	1	●
	125	Supercity	92 - 95	1	●
K7	125		91 -	1	●
W8	125	/ R	94 -	1	●
W8	125		84 -	1	●
WMX	125		89 - 90	1	●
WMX	125		88	1	●
	125	Cross	86 -	1	●
	125	Cruiser	87	1	●
	125	Cruiser	87 - 89	1	●
	125	Freccia	89	1	●
	125	Freccia C12 R	91 -	1	●
	125	Freccia C9	87	1	●
	125	Mito Racer	91 - 92	1	●
	125	N1	97 -	1	●
	125	N90	91 -	1	●
	125	Supercity	98 -	1	●
	125	Tamanaco	88 - 89	1	●
WMX	250		89 - 90	1	●
WMX	250		88 -	1	●
	250	Cross	86 -	1	●
	350	W 12	92 -	1	●
	600	W16	95 -	1	●
GILERA					
	125	Apache	91 -	1	●
RC	125	Top Rally	90 -	1	●
RC	600	Top Rally	90 -	1	●
RC	600		89	1	●
HUSABERG					
TE	350		91 - 93	1	●
HUSQVARNA					
CR	125		91 - 95	1	●
WR	125		85 - 90	1	●
WR	125		90 - 91	1	●
WR	125		91 - 96	1	●
HUSQVARNA					
WRK	125		88	1	●
WRK	125		90	1	●
CR	240		86 - 87	1	●
WR	240		85 - 88	1	●
WR	240		87 - 90	1	●
WR	240		91 -	1	●
WRK	240		90	1	●
WR	250		90 - 96	1	●
CR	250		87 - 91	1	●
CR	250		91 - 96	1	●
WR	250		87 - 90	1	●
XC	250		87 - 90	1	●
WR	260		90 -	1	●
TE	350	Enduro	90	1	●
TE	350		90 - 91	1	●
WR	360		96	1	●
WR	400		86 - 87	1	●
WR	400		87 -	1	●
TE	410		96	1	●
	430	Auto	87 -	1	●
CR	430		87 - 89	1	●
WR	430		87 -	1	●
XC	430		87 -	1	●
XC	500		87 -	1	●
TC	510		87 - 90	1	●
TE	510		87 - 89	1	●
TE	510		90 -	1	●
TC	610	Cross	91 - 96	1	●
TC	610		90 - 91	1	●
TE	610		90 - 91	1	●
TE	610		91 - 96	1	●
KRAM-IT					
ER	125		89 - 93	1	●
MC	250		89	1	●
ER	300		89	1	●
MOTO MORINI					
	350	Coguaro / New York	90 -	1	●
	350	Dart	88	1	●
RLX	350	Excalibur	90 -	1	●
	400	Dart	89	1	●
	501	Coguaro	89	1	●
RLX	501	Excalibur	90 -	1	●
YAMAHA					
DT	125	Tenere Belgarda	88 - 92	1	●
DT-Z	125	Ténéré / Scout	89 - 90	1	●
TDR	125	(3HS1/3XD03SH3/3XD1)	89 - 93	1	●
TDR	125	Italie 3XD 3SH	89 - 92	1	●
TDR	125	R (3SH2/3XE2) Lightburner	93 - 94	1	●

Street	Sport	Racing	Enduro	MX	Off-road Racing	ATV
	XBK5	C60				

2404

Dim. / Size

91.7 mm
51.6 mm
10 mm

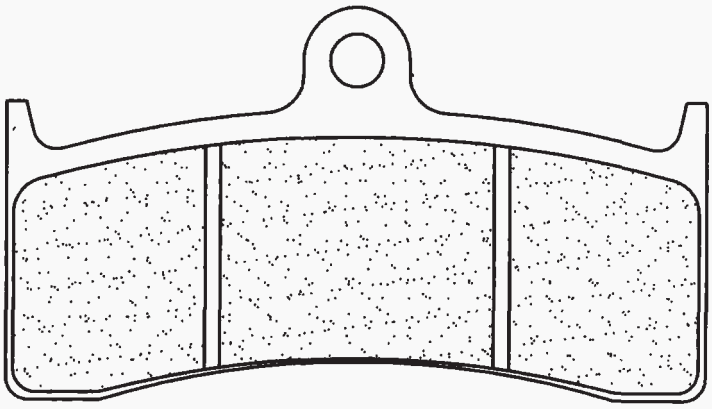

BERINGER		
6 Piston caliper (Road / Racing)	1	●
NISSIN		
6 Piston caliper (Road / Racing)	1	●

Dessins / Drawings / Zeichnungen / Disegni / Dibujos

1 - 2 = Nombre de jeux avant / Number of front sets / Anzahl Sets / Numero blister / Numero des juegos
L = Gauche / Left / Links / Sinistra / Izquierda - R = Droite / Right / Rechts / Destra / Derecha

Street	Sport	Racing	Enduro	MX	Off-road Racing	ATV
S4 A3+				MX10	X59	ATV1

2408

Dim. / Size

41.2 mm
45.2 mm
8 mm

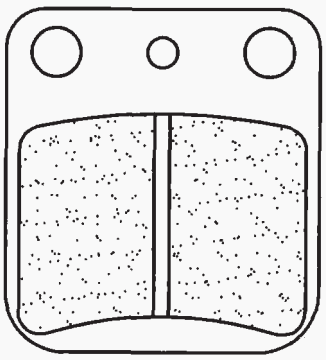

DAELIM							
	100	Altino	98 -	1	●		
	125	Altino	02 -	1	●		
NF	125		03 -	1	●		
VS	125		98 -	1	●		
HONDA							
CB	50	(All models)	80 - 81	1	●		
CRM	50		88 - 92	1	●		
CRM	50		93 - 96	1	●		
MB	50	S	80 - 82	1	●		
MBX	50		80 - 82	1	●		
MRX	50		88 -	1	●		
CB	80		80 - 81	1	●		
MBX	80	FWD	83 - 86	2	●		
CB	125	RS	83 -	1	●		
CG	125		04 -	1	●		
CG	150		04 -	1	●		
ATC	250	R	81	1	●		
HYOSUNG							
	450	Rapier	06 -	2	●		
KAWASAKI							
KX	65		00 -			●	
BN	125	Eliminator A1 / A2	98 - 99	1	●		
KLX	125	D-Tracker	10 -			●	
KLX	125		10 -			●	
KVF	300	A1-A2 / B1-B2 Prairie	99 -	2	●		
	300	Brute Force	13 -	2	●		
KVF	360	2x4 / 4x4 Prairie	03 - 06	2	●		
KFX	400		02 -	2	●		
KVF	400	A1-A2 / B1 Prairie	97 - 98	2	●		
KVF	400	C1-C2 / D1-D2 Prairie	99 -	2	●		
MASH							
	125	Café Racer	14 - 15			●	
	125	Seventy Five Vintage	13 - 15			●	
	125	Seventy Five	13 - 15			●	
	250	Café Racer	14 - 15			●	
	250	Two Fifty	14 - 15			●	
PGO							
	50	Bug Rider	06 -			●	
	150	Bugxter	05 -			●	
SACHS							
	125	X-Road	07			●	
	125	X-Road	08			●	
XTC	125		08 -			●	
SUZUKI							
RM	65		03 - 05			●	
DF	125		98 - 00	1	●		
DR	125		86 - 02	1	●		
GX	125	R	88 -	1	●		
RH	125	X	87	1	●		
SP	125	G / H / J	86 - 88	1	●		
SX	125	R	85 -	1	●		
TS	125	X	86 - 90	1	●		
DF	200	(SH42A)	98 - 00	1	●		
DR	200	G / H / J	86 - 89	1	●		
DR	200	SE / T	93 - 08	1	●		
SUZUKI							
SP	200	G / H / J	86 - 88	1	●		
SX	200	R	85 -	1	●		
RH	240	X	87 -	1	●		
TS	240	X	85 -	1	●		
DR	250	F	85	1	●		
DR	250	S	86 - 89	1	●		
LT-F	250	Ozark	02 - 10	2	●		
LT-Z	250	Quad Sport	04 - 10	2	●		
RH	250		85 -	1	●		
SP	250	F	85	1	●		
TS	250	X	85 - 89	1	●		
LT-A	400	Eiger 2WD / 4WD	02 - 07	2	●		
LT-F	400	Eiger 2WD / 4WD	02 - 07	2	●		
LT-Z	400	Quad Sport	03 - 10	2	●		
LT-A	500	FK2 - FK7 Vinson	02 - 07	2	●		
LT-F	500	FK3 - FK7 Vinson Quadrunner	03 - 07	2	●		
LT-A	650	FK2 Vinson	02 -	2	●		
SYM							
	600	Quadraider	06 - 07	2	●		
YAMAHA							
SX	125	R	88 -	1	●		
YFS	200	R Blaster	03 - 06	2	●		
YFM	250	AN Bruin	05 - 06	2	●		
YFM	250	Bear Tracker	01 - 04	2	●		
YFM	250	Big Bear	07 -	2	●		
YFM	300	Warrior	89	2	●		
YFM	350	Big Bear	99	2	●		
YFM	350	Bruin 4x2 / 4x4	04 - 06	2	●		
YFM	350	Grizzly 4x2 / 4x4	07 -	2	●		
YFM	350	Warrior XW/XA-M	89 -	2	●		
YFM	350	Wolverine 4x2	95 - 05	2	●		
YFM	350	Wolverine 4x2	06 - 09	2	●		
YFM	350	XA - M Warrior	92 - 04	2	●		
YFZ	350	Banshee (T-W)	90 - 09	2	●		
YFM	400	FAM / FAN Kodiak	00 - 01	2	●		
YFM	400	FAT/FAV (Big Bear)	05 - 06	2	●		
YFM	400	FPR/FPS (Big Bear)	03 - 04	2	●		
YFM	400	Grizzly FGW/FGX	07 - 08	2	●		
YFM	400	Kodiak AR (5VH3/4)	03	2	●		
YFM	400	Kodiak Auto FAR/FAS	03 - 04	2	●		
YFM	450	Grizzly EPS	07 -	2	●		
YFM	450	Kodiak FAR/FAS (5ND3/4)	03 - 04	2	●		
YFM	450	Kodiak FAT/FAHT/FAV	05 - 06	2	●		
YFM	450	Wolverine FXV-FXZ	06 -	2	●		
YFM	660	Grizzly FR /FS/FT	03 - 05	2	●		
YFM	660	Grizzly FWAP-FWAV	02 - 08	2	●		
YFM	660	Raptor RN-RT	01 - 05	2	●		●

Street	Sport	Racing	Enduro	MX	Off-road Racing	ATV
S4				MX10		

2424

Dim. / Size

82.8 mm
22 mm
7.2 mm

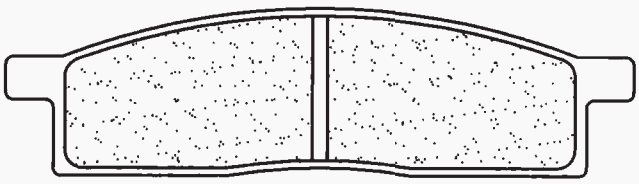

YAMAHA							
DT	50	LC	98 -	1	●		
YZ	80	A / B / D	90 - 92	1	●		
YZ	80	E / F / G / H1 / J1	93 - 01	1	●		
YZ	80	S / T / U / W	86 - 89	1	●		
YZ	85	All models	02 - 10	1	●		
TT-R	125	LW	00 - 10	1	●		

1 - 2 = Nombre de jeux avant / Number of front sets / Anzahl Sets / Numero blister / Numero des juegos
L = Gauche / Left / Links / Sinistra / Izquierda - R = Droite / Right / Rechts / Destra / Derecha

Street	Sport	Racing	Enduro	MX	Off-road Racing	ATV
A3+	XBK5					

2430

Dim. / Size
99.8 mm
55.8 mm
8.5 mm

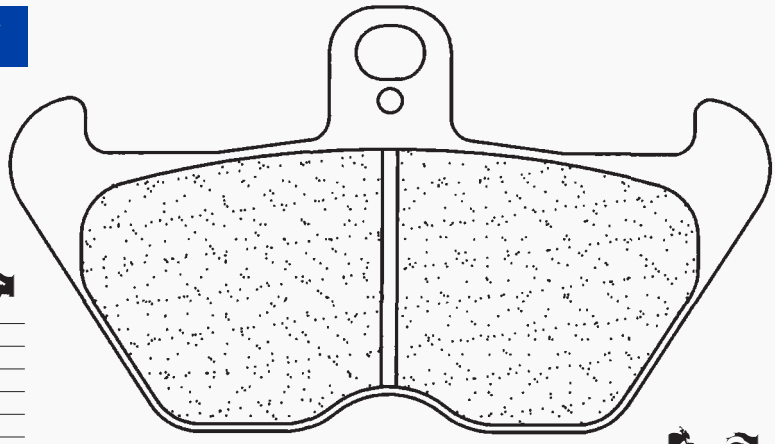

BMW					
R80	800 R Roadster	91 -	1	●	
R	850 C	98 -	2	●	
R	850 GS	98 -	2	●	
R	850 R	95 - 02	2	●	
R	850 RT	98 - 00	2	●	
K1	1000	89 - 93	2	●	
K100	1000 LT	92 -	2	●	
R100	1000 R	91 - 95	1	●	
R100	1000 Roadster / Mystic	93 - 95	1	●	
R100	1000 RS (4V)	90 - 92	2	●	
K	1100 All models	92 -	2	●	
K	1100 LT / LTS	92 -	2	●	
K	1100 RS / RT	93 -	2	●	
K	1100 RS ABS	93 -	2	●	
R	1100 GS	00 - 01	2	●	
R	1100 GS	94 - 99	2	●	
R	1100 GS ABS	95 - 01	2	●	
R	1100 R	95 -	2	●	

BMW					
R	1100 RS	94 -	2	●	
R	1100 RS	93	2	●	
R	1100 RS ABS	93 -	2	●	
R	1100 RT	95 -	2	●	
R	1100 RT ABS	95 -	2	●	
R	1100 S	99 - 00	2	●	
R	1150 GS	00 - 01	2	●	
K	1200 LT	97 - 00	2	●	
K	1200 RS	99 - 01	2	●	
R	1200 C	98 -	2	●	

Street	Sport	Racing	Enduro	MX	Off-road Racing	ATV
S4 A3+ RX3				MX10		

2451

Dim. / Size
81.1 mm
42 mm
7.3 mm

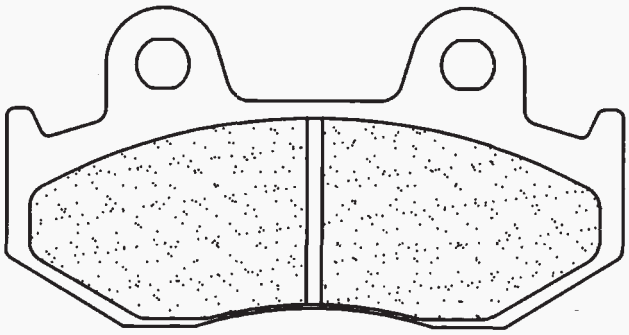

HONDA					
MBX	80	86 -	1	●	
MTX	80 R	87 -	1	●	
CR	125 RG	86	1	●	
CR	125 RE / RF	84 - 85	1	●	
MTX	125 R	84 - 95	1	●	
NSR	125 F	88 - 89	1	●	
XL	125 R	86	1	●	
MTX	200 R	85 -	1	●	
CB	250 RS	85 -	1	●	
CR	250 RE / RF	84 - 85	1	●	
CR	250 RG	86	1	●	
FTR	250	86 -	1	●	●
XL	250 R	84 - 87	1	●	
XLR	250 R	88 -	1	●	
XR	250 R	84 - 87	1	●	
XL	350 R	84 - 85	1	●	
XR	350 R	84 - 85	1	●	
CR	500 RE / RF / RG	84 - 86	1	●	
XLR	500 R	83 -	1	●	
XR	500 R Pro Link	83 - 84	1	●	
XR	500 R	86 -	1	●	
XL	600 R	83 - 87	1	●	
XLM	600 LM	87 -	1	●	
XR	600 R	83 - 87	1	●	
BENELLI					
	125 Tordano Naked T	17 -	1	●	

Street	Sport	Racing	Enduro	MX	Off-road Racing	ATV
A3+				MX10		ATV1

2466

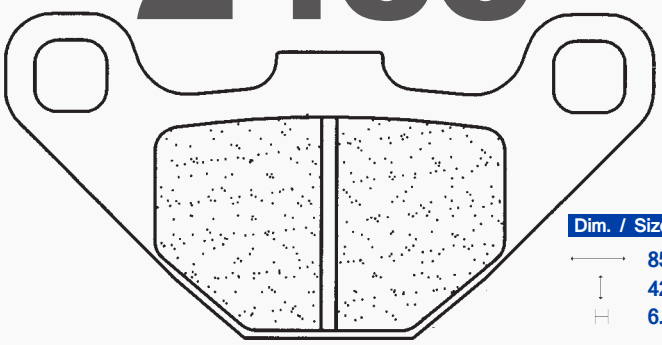

Dim. / Size
85 mm
42.5 mm
6.5 mm

ADLY					
	150 Interceptor	05 -			●
	300 Interceptor	05 -			●
HERCULES					
GP	50 Supra	80 -	1	●	
MALAGUTI					
MEX	50	86 -	1	●	
MFX	50	86 -	1	●	
MGX	425 Ronco	87 -	1	●	

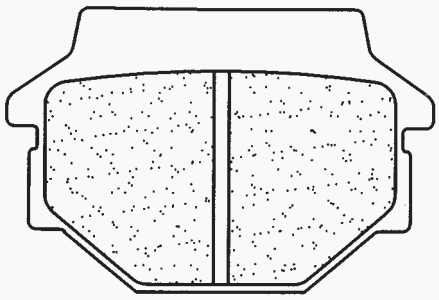

Dim. / Size
56 mm
37.1 mm
8.7 mm

1 - 2 = Nombre de jeux avant / Number of front sets / Anzahl Sets / Numero blister / Numero des juegos
L = Gauche / Left / Links / Sinistra / Izquierda - R = Droite / Right / Rechts / Destra / Derecha

Street	Sport	Racing	Enduro	MX	Off-road Racing	ATV
S4				MX10	X59	ATV1

2469

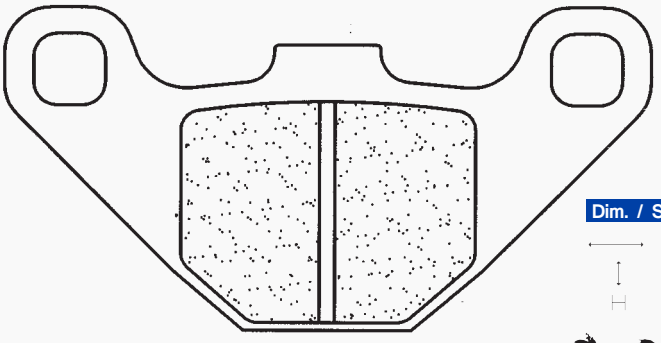

Dim. / Size
85 mm
42.5 mm
6.5 mm

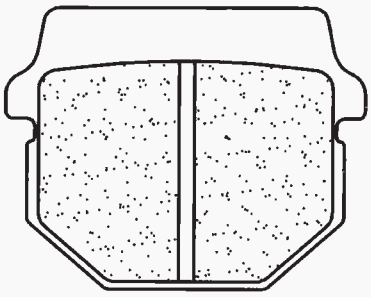

Dim. / Size
47.4 mm
37.1 mm
8.7 mm

ADLY					
	150	ATV	05 - 2	●	●
	150	Interceptor	05 - 2	●	
	300	ATV	05 - 2	●	●
	300	Interceptor	05 - 2	●	
AEON					
	100	Revo 2	04 -		●
APRILIA					
RX	125	Enduro	08		●
RX	125	Supermotard	08 -		●
SX	125		08 -		●
BOMBARDIER					
	200	Rally 2x4	03 - 04 2	●	
	200	Rally 2x4	05 - 2	●	
CAN-AM					
	90	DS X	08 - 2	●	●
CPI					
XS	250	Quad	06 - 2	●	
DAELIM					
	250	Sector Quad	05 - 06 2	●	
DERBI					
DXR	200	Quad (Front disc)	04 - 2	●	
DXR	250	Quad (Front disc)	04 - 2	●	
E-TON					
VXL	250	Vector, ST Vector	06 - 2	●	
VXL	300	Vector, ST Vector	07 - 2	●	
VTX	300	Vortex, ST Vortex	07 - 2	●	
FACTORY					
	50	Helix	04 -		●
	50	Rex	04 -		●
	100	Helix	04 -		●
	100	Rex	04 -		●
FANTIC					
	125	Caballero Motard Aircooled	10 -		●
	125	Regolarna Casa	08 -		●
	125	Supersei Motard	08 -		●
HONDA					
MB	80		80 - 1	●	
MCX	80		82 - 1	●	
KAWASAKI					
AR	50		81 - 82 1	●	
KMX	50		88 - 1	●	
KSR	50	I	90 - 1	●	●
AR	80		81 - 1	●	
KD	80	N1 / N3	88 - 90 1	●	
KMX	80		87 - 1	●	
KSR	80	II	90 - 1	●	●

KAWASAKI					
KX	80	E / G / H / J	84 - 87 1	●	
KX	80	L / N / R-R6	88 - 96 1	●	
KX	100		88 - 92 1	●	
KX	100	B5 / B6	95 - 96 1	●	
KDX	125	A / B	90 - 1	●	
KMX	125		86 1	●	
KMX	125		87 - 02 1	●	
KMX	125		86 1	●	
KMX	125		87 - 02 1	●	
KX	125	B1	82 1	●	
ZL	125	Eliminator	97 - 1	●	
KMX	200	A2 / A3 / A4	88 - 92 1	●	
KX	250	B1	82 1	●	
KXT	250	A1 Tecate Trike	84 -		●
MAICO					
C-1	50	Hard Enduro	99 - 1	●	
X-1	50	SuperCross	99 - 1	●	
MONTESA					
	80	Junior	96 - 1	●	
MZ / MUZ					
	150	VRS			●
PGO					
	50	X-Rider	03 -		●
	125	X-Rider	03 -		●
	150	X-Rider	03 -		●
POLARIS					
	200	Phoenix	05 - 08 2	●	
	200	Sawtooth	06 2	●	●
SUZUKI					
CR	50	DC	87 - 1	●	
CP	50		85 - 1	●	
RM	80	G / H / J / K	86 - 89 1	●	
RM	80	L / M / N / P / R / S	90 - 95 1	●	●
RM	80	T	96 - 01		●
RM	85	/ L	02 - 04		●
TGB					
	50	Hornet	04 - 05		●
	90	Hornet	04 - 05		●
	250	Blade / Congo	06 - 07		●
	325	Blade 4x2 / LE	07 -		●
	325	Target 4x2	09 - 2	●	
	400	Target 4x2	09 - 2	●	
	425	Target 4x2	09 - 2	●	
	500	Target 4x2	09 - 2	●	
	525	Target 4x4	09 - 2	●	

Street	Sport	Racing	Enduro	MX	Off-road Racing	ATV
RX3						

2472

APRILIA					
	125	Pegaso	92 -		●
	125	Tuareg Rally	92		●
MX	125		04 -		●
MX	125	SM	07 -		●
	600	Pegaso	90 -		●
	650	Pegaso	92 - 96		●
BUELL					
M2	1200	Cyclone	98 - 02		●

BUELL					
S1	1200	Lightning	98 - 02		●
S3	1200	Thunderbolt	98 - 02		●
S1	1200	Whitelightning	98 - 02		●
CAGIVA					
WMX	50		89 -		●

1 - 2 = Nombre de jeux avant / Number of front sets / Anzahl Sets / Numero blister / Numero des juegos
L = Gauche / Left / Links / Sinistra / Izquierda - R = Droite / Right / Rechts / Destra / Derecha

Street	Sport	Racing	Enduro	MX	Off-road Racing	ATV

2472

RX3

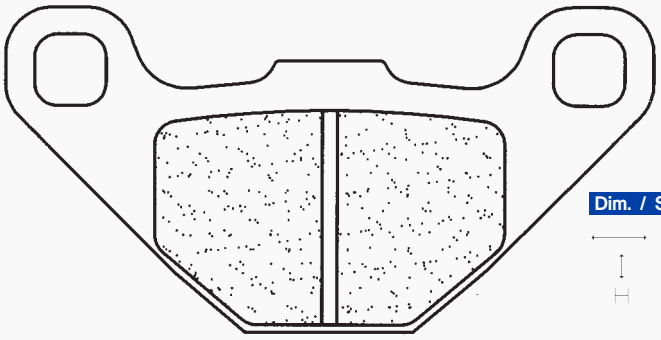

Dim. / Size
85 mm
42.5 mm
6.5 mm

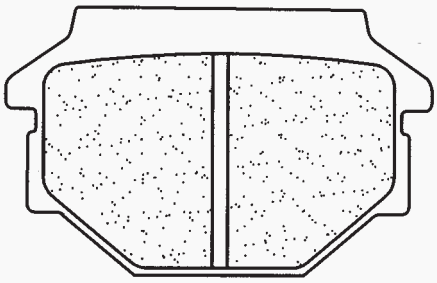

Dim. / Size
56 mm
34.9 mm
8.7 mm

MZ / MUZ				
	660	Baghira (All models)	96 - 05	●
	660	Black Panther	00 -	●
	660	Mastiff 21"	96 - 05	●
	660	Street Moto	00 -	●
	660	Super Moto	07 -	●
SACHS				
XTC	125	Supersport	00 - 07	●

SACHS				
ZX	125		98 -	●
ZZ	125	Funbike	98 -	●
	125	X-Road	06	●
	650	Roadster V1.6	01 - 04	●
	800	Roadster V2	00 -	●
	805	B / S	03 - 04	●
SIMSON				
	125	SR	01 -	●

Street	Sport	Racing	Enduro	MX	Off-road Racing	ATV

S4 A3+ **XBK5 C60**

2539

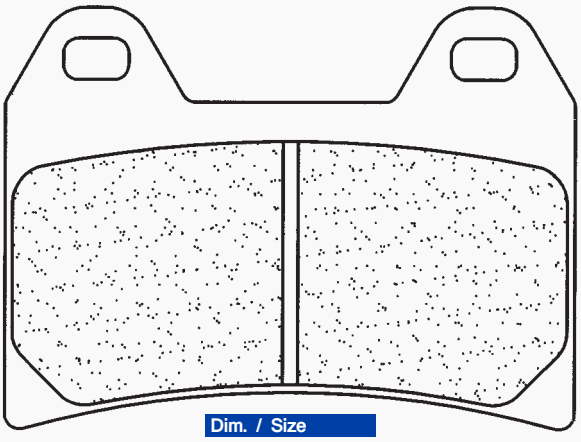

Dim. / Size
75 mm
55.5 mm
8.5 mm

APRILIA					
RS	250	R Piste	04 -	2	●
RS	250		97 - 02	2	●
	650	Pegaso Strada	05 -	1	●
SMV	750	Dorsoduro Factory	10 - 17	2	●
RST	1000	Futura	01 -	2	●
RSV	1000	R	00	2	●
RSV	1000	SP	00 -	2	●
RSV	1000	Tuono R	03	2	●
RSV	1000	Tuono R Factory	04 -	2	●
RSV	1000		97 - 01	2	●
SL	1000	Falco	00 - 05	2	●
V4R	1000	Tuono / Tuono APRC	11 - 13	2	●
SMV	1200	Dorsoduro	11 - 12	2	●
SMV	1200	Dorsoduro ATC/ABS	11 -	2	●

BENELLI					
666	125	Born in hell	98 -	1	●
BN	302		14 -	2	●
	502	TRK / TRK X	16 -	2	●
BN	600	GT	14	2	●
2ue	756	Cue	10 -	2	●
TnT	899	/ Sport	07 -	2	●
Tre-K	899		07 -	2	●
	900	Tornado 3	00 - 02	2	●
TNT	1100		04	2	●
TNT	1130		05 -	2	●
Tre-K	1130	Amazonas	07 -	2	●
Tre-K	1130		06 -	2	●
BIMOTA					
DB4	900		99 -	2	●
SB8K	996	Gobert	06	2	●
SB8	1000	R	98 -	2	●
BMW					
G	650	Xmoto	07 -	1	●
F	800	R	09 - 14	2	●
F	800	S	06 -	2	●
F	800	ST	06 -	2	●
F	800	GT	13 - 17	2	●
BREMBO					
P4 30x30 Double pin (Road / Racing)				1	●
CAGIVA					
	650	Raptor	01 -	2	●
	650	V-Raptor	01 -	2	●
	1000	Raptor	00 -	2	●
	1000	V-Raptor	00 -	2	●
	1000	Xtra Raptor	02 -	2	●
DUCATI					
	400	Monster (Japan)	02 -	1	●
	600	Monster	00 - 01	1	●
	620	Monster Dark i.e	02 - 05	2	●
	620	Monster i.e	02 - 05	2	●
	620	Monster si.e	02 - 05	2	●
	620	Multistrada Dark	05 -	1	●
	620	Sport	03 -	2	●
M	696	Monster	08 -	2	●
	748	/ S	99 - 03	2	●
	748	R	00	2	●
	748	SPS	98 - 99	2	●
	750	Monster / Monster i.e	00 - 02	2	●
	750	Sport / Supersport	00 - 02	2	●
	796	Hypermotard	10 -	2	●
	796	Monster	10 -	2	●
	800	Monster i.e / si.e	03 - 05	2	●
	800	Sport / Supersport	03	2	●
	800	Supersport	04	2	●
	848	Street Fighter	12 -	2	●
	848		08 -	2	●

1 - 2 = Nombre de jeux avant / Number of front sets / Anzahl Sets / Numero blister / Numero des juegos
L = Gauche / Left / Links / Sinistra / Izquierda - R = Droite / Right / Rechts / Destra / Derecha

2539 suite

Street	Sport	Racing	Enduro	MX	Off-road Racing	ATV
S4 A3+	XBK5	C60				

DUCATI						
MH	900	e	01 -	2	●	
	900	Monster / Monster i.e	00 - 02	2	●	
	900	Supersport	98 - 02	2	●	
	916	Monster S4	01 - 03	2	●	
	916	SPS	97 - 98	2	●	
	916	ST4	99 - 01	2	●	
	944	ST2	97 - 03	2	●	
	992	ST3	04 -	2	●	
	992	ST3s ABS	06 -	2	●	
	996	Monster S4R	04 - 05	2	●	
	996	SPS	99 - 01	2	●	
	996	ST4s	02 -	2	●	
	996	ST4s ABS	03 -	2	●	
	998	/ S	02 - 03	2	●	
	1000	Monster Dark i.e / si.e	03 - 05	2	●	
	1000	Monster i.e / si.e	03 - 05	2	●	
	1000	Monster S2R	06 - 08	2	●	
	1000	Monster S4R	06 -	2	●	
	1000	Multistrada DS	03 - 05	2	●	
	1000	Multistrada S DS	05 - 06	2	●	
	1000	Supersport DS	03 -	2	●	
	1100	Hypermotard	07 -	2	●	
	1100	Hypermotard Evo	10 -	2	●	
	1100	Monster / Monster S	09 -	2	●	
	1100	Monster Evo	11 -	2	●	
	1100	Multistrada / Multistrada S	07 - 09	2	●	
	1200	Multistrada ABS	10 - 13	2	●	
	1200	Multistrada Granturismo	13	2	●	
	1200	Multistrada S Pikes Peak	11 - 14	2	●	
	1200	Multistrada S Sports Edition	10 - 12	2	●	
	1200	Multistrada S Touring Edition	10 - 14	2	●	
	1200	Multistrada Standard Edition	10 - 11	2	●	
HUSQVARNA						
SM	570	Nox	01 - 03	1	●	
LT	610	E	99 -	1	●	
SM	610	SM / SMS	98 -	1	●	
	690	701 Vitpilen	18 -	1	●	
	900	Nuda	11 -	2	●	
KTM						
	625	SMC	05 - 06	1	●	
	640	Duke II	99 - 07	1	●	
SMC	640	LC4	05	1	●	
	660	SMC	05 - 06	1	●	
	690	Duke ABS	12 -	1	●	
	690	SM	07 - 09	1	●	
	1050	Adventure	15 - 16	2	●	
	1090	Adventure / Adventure R	17 -	2	●	
	1190	Adventure	13 - 15	2	●	
	1190	Adventure R	13 - 15	2	●	
	1290	Super Adventure	15 - 16	2	●	
	1290	Super Adventure R / S	17 -	2	●	
MOTO GUZZI						
	750	Breva i.e	03 -	2	●	
V7	750	Clubman Racer	10 - 11	1	●	
V7	750	Clubman Racer	12 - 14	1	●	
	750	Nevada / Nevada Club	03 - 04	1	●	
	750	Nevada Classic i.e	05 -	1	●	
	750	Nevada Touring	07 -	1	●	
V7	750	III	17 -	1	●	
V9	850	Bobber / Roamer	16 -	1	●	
	850	Breva	07 -	2	●	
	850	Griso	07 -	2	●	
	850	Norge	07 -	2	●	
	940	Bellagio / Custom	07 -	2	●	
	1100	Aluminium	03 - 05	2	●	
	1100	Breva	05 - 06	2	●	
	1100	Breva (ABS)	07	2	●	
	1100	Breva V1100	05	2	●	
	1100	California (2 pin pads)	01 - 05	2	●	
	1100	California EV (2 pin pads)	01 -	2	●	
	1100	California Sport (2 pin pads)	01 - 02	2	●	
	1100	California Vintage	06 - 10	2	●	
	1100	Classic	06 - 09	2	●	
	1100	Griso	05 -	2	●	
	1100	Griso 8v	07 - 08	2	●	
	1100	Metal	02 - 03	2	●	
	1100	Titanium Handlebar Fairing	03 - 05	2	●	
	1100	Touring	06 - 07	2	●	

MOTO GUZZI						
V11	1100	Lemans (All models)	01 - 04	2	●	
V11	1100	Scura / Sport Scura	02 -	2	●	
V11	1100	Sport (All models)	01 -	2	●	
	1200	Breva	08 -	2	●	
	1200	Griso 8V	07 -	2	●	
	1200	Norge	06 -	2	●	
	1200	Norge GT 8V	10 -	2	●	
	1200	Sport 2V	06 - 09	2	●	
	1200	Sport 4V	08 - 09	2	●	
	1200	Sport 8V	12 -	2	●	
	1200	Sport ABS	06 - 07	2	●	
	1200	Stelvio	08 - 11	2	●	
	1200	Stelvio 8V (ABS)	11 - 13	2	●	
	1200	Stelvio 8V NTX	11 - 13	2	●	
	1200	Stelvio NTX (ABS)	09 - 10	2	●	
	1400	California Custom	13 -	2	●	
	1400	California Touring	13 -	2	●	
	1400	MGX-21	16 -	2	●	
MOTO MORINI						
	998	9 1/2	06 - 10	2	●	
	1187	MM3	07	2	●	
	1200	Corsaro	05 - 10	2	●	
	1200	Corsaro Avio	08 - 09	2	●	
	1200	Corsaro Veloce	07 - 09	2	●	
	1200	Scrambler	08 - 10	2	●	
	1200	Sport	08 - 10	2	●	
MV AGUSTA						
	675	Brutale B3	12 -	2	●	
	675	F3	12 - 14	2	●	
	800	Brutale	13 -	2	●	
	800	Dragster / Dragster RR	15 -	2	●	
	800	Brutale RR	15 -	2	●	
	920	Brutale	11 -	2	●	
	989	Brutale R	08 - 09	2	●	
	990	Brutale R	10 -	2	●	
	1090	Brutale R	12 -	2	●	
MZ / MUZ						
	1000	S	01 - 02	2	●	
NORTON						
	961	Commando Sport	10 - 14	2	●	
SACHS						
	125	X-Road	08	1	●	
XTC	125		08 -	1	●	
SUZUKI						
GSX	400	FSV/FSK1 (GK7B) Inazuma	00 -	1	●	
GSX	400	X Impulse (GK79A)	99 -	1	●	
GSX	1200		98 - 01	2	●	
VICTORY						
Kingpin	1500	Tour	04 - 07	1	●	
Kingpin	1500		04 - 07	1	●	
Touring	1500	Cruiser	05 -	2	●	
V92	1500	V92C Cruiser / Deluxe	98 - 03	1	●	
V92	1500	V92SC Sport Cruiser	00 - 03	2	●	
Hammer	1634	S	07 - 08	2	●	
Hammer	1634		05 - 07	2	●	
Vegas	1634	8-Ball	05 - 07	1	●	
Vegas	1634	Arlen Ness / Jackpot	04 - 07	1	●	
Vegas	1634		03 - 07	1	●	
VOXAN						
	1000	Black Magic	04 - 08	2	●	
	1000	Café-Racer	06 - 08	2	●	
VB1	1000	EVO	03 - 04	2	●	
	1000	Roadster	06 - 08	2	●	
	1000	Street Scrambler	07 - 08	2	●	
YAMAHA						
FZ	400	R	86 - 87	2	●	
XJR	400	R (Brembo)	95 - 99	2	●	
XT	660	X Supermotard	04 -	1	●	
TRX	850	(Japan models) (Brembo)	96 - 99	2	●	
XJR	1200	(Japan models) (Brembo Cal.)	95 - 98	2	●	
XJR	1300	(Japan models) (Brembo Cal.)	98 - 99	2	●	

1 - 2 = Nombre de jeux avant / Number of front sets / Anzahl Sets / Numero blister / Numero des juegos
L = Gauche / Left / Links / Sinistra / Izquierda - R = Droite / Right / Rechts / Destra / Derecha

Street	Sport	Racing	Enduro	MX	Off-road Racing	ATV
S4 A3+	XBK5	C60				

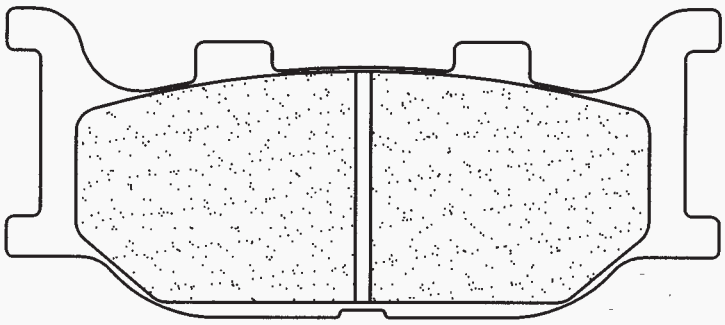

Dim. / Size

94 mm
40.7 mm
10 mm

2546

JIANCHE					
JS	125		02 -	1	●
JINCHENG					
JC	150	T-D	06 -	1	●
KEEWAY					
	250	Supershadow	06 -	1	●
YAMAHA					
SR	125		97 - 03	1	●
TDR	125	(4GW/GX1/2/3/4)	93 - 03	1	●
TZR	125	(3JB / 4JB / 4HW / 4HX)	93 - 95	1	●
XV	125	Virago	97 - 00	1	●
XVS	125	Dragstar	00 - 04	1	●
TZR	150	(4AP2)	00 -	1	●
XV	250	Virago S	95 - 00	1	●
XVS	250	Dragstar	01 - 03	1	●
SR	400		14 -	1	●
XJR	400	R	93 - 96	2	●
FZ6	600	N / Fazer	04 - 07	2	●
FZ6	600	N / Fazer ABS	06 - 07	2	●
XJ	600	N / S Diversion	98 - 03	2	●
XJ6	600	/ ABS	09 -	2	●
XJ6	600	Diversion / ABS	09 -	2	●
XJ6	600	Diversion F / ABS	10 -	2	●
MT-03	660		06 -	2	●
XV	1100	Virago	99	2	●
XVS	1100	Dragstar / A Dragstar Classic	99 - 06	2	●
XVS	1100	V-Star Custom	05 -	2	●
XVS	1300	A Midnight Star	07 -	2	●
XVS	1300	Custom	14 -	1	●

Street	Sport	Racing	Enduro	MX	Off-road Racing	ATV
	XBK5	C60				

PVM		
6 Piston caliper (Racing)	1	●

2584

Dim. / Size

102.3 mm
54.3 mm
9 mm

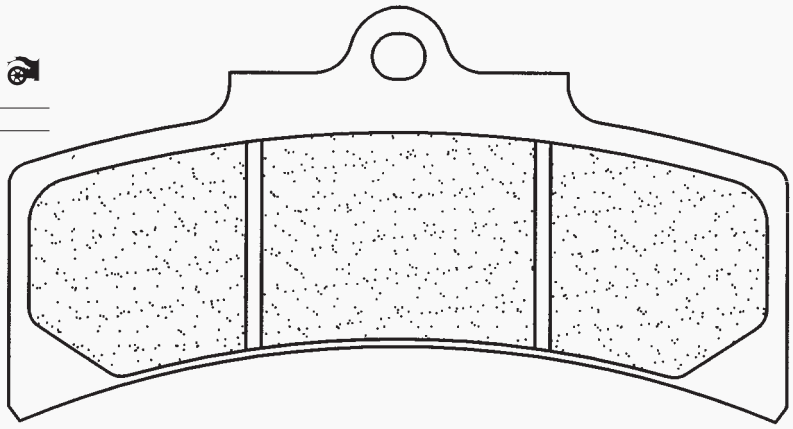

Street	Sport	Racing	Enduro	MX	Off-road Racing	ATV
	XBK5	C60				

SPIEGLER		
8 Piston caliper (Road / Racing)	1	●

2586

Dim. / Size

117 mm
59.5 mm
8 mm

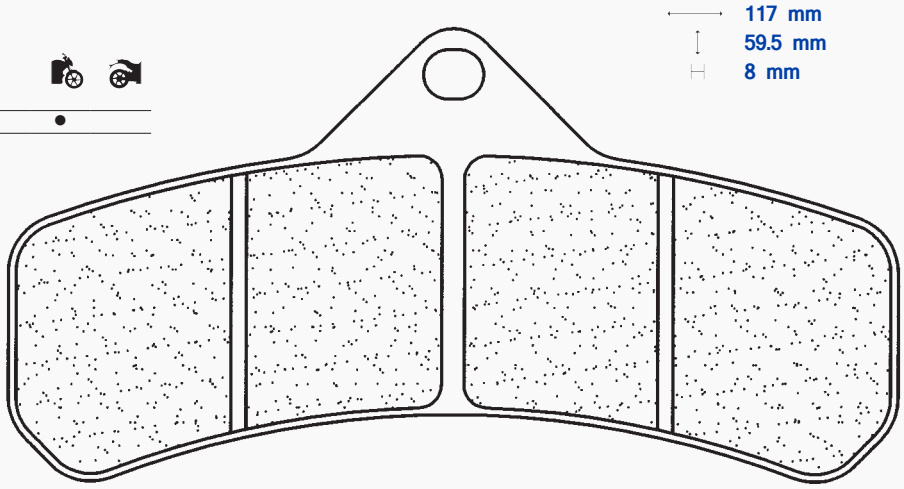

1 - 2 = Nombre de jeux avant / Number of front sets / Anzahl Sets / Numero blister / Numero des juegos
L = Gauche / Left / Links / Sinistra / Izquierda - R = Droite / Right / Rechts / Destra / Derecha

Street	Sport	Racing	Enduro	MX	Off-road Racing	ATV

A3+ RX3

2599

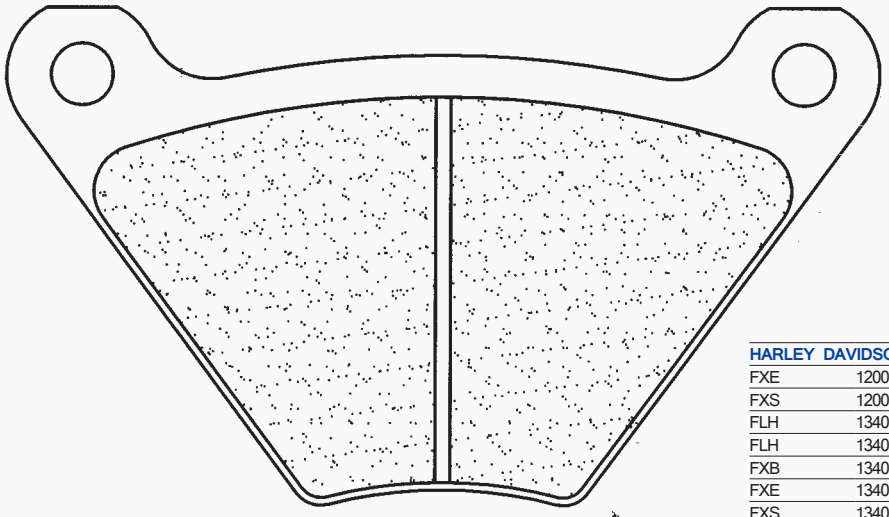

Dim. / Size

114.8 mm
65.7 mm
7.2 mm

HARLEY DAVIDSON					
FLH	1200	80	1	●	
FLH	1200 Anniversary	78	1	●	●
FL	1200 FLH Police	75 - 79	1	●	●
FLH	1200 Touring	77 - 78	1	●	●
FLH	1200	74 - 76	1	●	●
FLHS	1200	77 - 80	1	●	●
FX	1200	74 - 80			●

HARLEY DAVIDSON					
FXE	1200	74 - 80			●
FXS	1200	78 - 79			●
FLH	1340 80	78 - 80	1	●	●
FLH	1340 80	81	1	●	
FXB	1340 80	80 - 81			●
FXE	1340 80	78 - 81			●
FXS	1340 80	79 - 81			●
FXWG	1340 80	80 - 81			●
FXEF	1340 80 Fat Bob	79 - 81			●
FLH	1340 Electra Glide	82 - 83			●
FLH	1340 Electra Glide Speciale	84	1	●	
FXS	1340 Low Rider	82			●
FXB	1340 Sturgis	82			●
FXE	1340 Super Glide	83			●
FXWG	1340 Wide Glide	83			●
FXR	1340	78 - 81			●

Street	Sport	Racing	Enduro	MX	Off-road Racing	ATV

S4 MX10

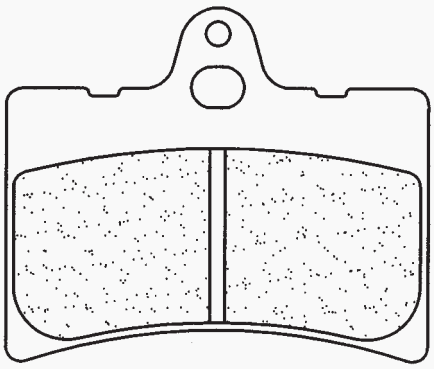

Dim. / Size

55.6 mm
46.6 mm
6 mm

BETA					
TR	125 34	92 -	1	●	
TR	250 36	92 -	1	●	
CAGIVA					
	50 Prima	93 -	1	●	
	80 Prima	92 -	1	●	

2601

Street	Sport	Racing	Enduro	MX	Off-road Racing	ATV

A3+ RX3 XBK5

2602

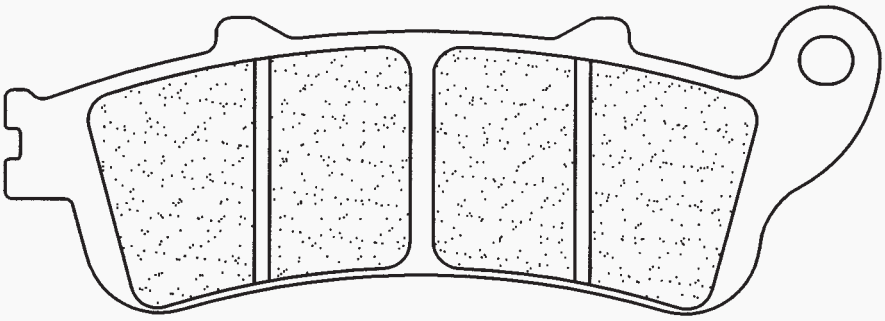

Dim. / Size

115 mm
38.8 mm
8.5 mm

1 - 2 = Nombre de jeux avant / Number of front sets / Anzahl Sets / Numero blister / Numero des juegos
L = Gauche / Left / Links / Sinistra / Izquierda - R = Droite / Right / Rechts / Destra / Derecha

Street	Sport	Racing	Enduro	MX	Off-road Racing	ATV

A3+ RX3 XBK5

2602 suite

HONDA						
NT	650 V Deauville	02 - 05	2	●	●	
NT	700 Deauville / ABS	06 -			●	
VFR	800 FI	98 - 01	2	●	●	
VFR	800 VTEC / VTEC ABS	02 - 05	2	●	●	
VFR	800 VTEC / VTEC ABS	06 - 13			●	
XL	1000 Varadero	99 - 06	2	●	●	
XL	1000 Varadero	07 -			●	
XL	1000 Varadero ABS	04 -			●	
XL	1000 Varadero Travel	05 -	2	●	●	
XL	1000 Varadero Travel ABS	05 -			●	
ST	1100 Pan European ABS-TCS	96 - 02	2	●	●	
CB	1100 X-11	00 - 03	2	●	●	
CBR	1100 XX BlackBird	97 - 98	2	●	●	
HONDA						
ST	1300 Pan European	02 - 07	2	●	●	
ST	1300 Pan European ABS	08 -			●	
GL	1800 Goldwing	01 -	2	●		
NRX	1800 Valkyrie Rune	04 -	2	●		
VTX	1800	01 -	2	●		
KAWASAKI						
	650 Vulcan S	15 -	1	●		
VICTORY						
Vision	1731 8-Ball	10 -	2	●		
Vision	1731 Arlen Ness Victory	10 -	2	●		
Vision	1731 Street / Tour	08 - 10	2	●		

Street	Sport	Racing	Enduro	MX	Off-road Racing	ATV

S4 A3+ RX3 MX10

2621

Dim. / Size

77 mm
42 mm
8 mm

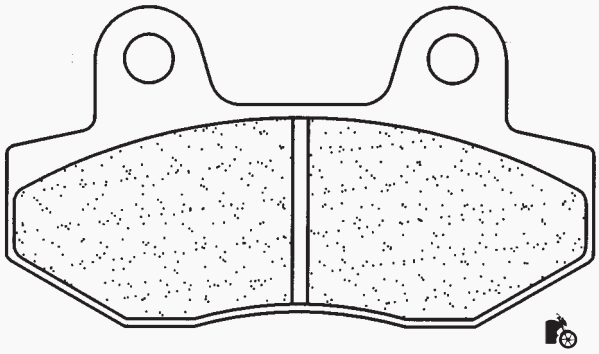

CAGIVA					
	50 Mito	98 -	1	●	
	116 Stella	97 -	1	●	
HONDA					
MBX	50 S	83 - 85	1	●	
NS	50 F Aero	88 -	1	●	
NS-1	50	91 -	1	●	
NSR	50	89 - 90	1	●	
NSR	75 FII	88 - 00	1	●	
MBX	80 SW / SWD	83 -	1	●	
MBX	80	83 - 86	1	●	
MBX	80 DX	82 -	1	●	
NSR	80 R	87 - 92	1	●	
CBX	125 Custom	88	1	●	
MBX	125 RWB	84 -	1	●	
CB	250 Rebel	86 -	1	●	
CMX	250 Rebel	85 -	1	●	
	250	86 -	1	●	
HYOSUNG					
GT	125 Comet	02 -	1	●	●
GT	125 Comet R	06 -	2	●	●
GV	125 Aquila	02 - 04	1	●	
GV	125 Aquila	05 -	1	●	
RT	125 Karion	02 -	1	●	
RX	125 SM	07 -	1	●	●
RX	125	00 -	1	●	
XRX	125 Offroad	99 - 06	1	●	
XRX	125 SM	07 -	1	●	●
GT	250 Comet	03 -	1	●	●
GT	250 R	07 -	2	●	●
GV	250 Aquila	02 -	1	●	
HYOSUNG					
XRX	400	05 -	1	●	
GT	600 Comet	03	2	●	●
GT	650 Comet	04 -	2	●	●
GT	650 Comet R / S	05 -	2	●	●
GT	650 Custom Trendkiller	07 -	2	●	●
GT	650 TTC	07 -	2	●	●
GT	650 X	07 -	2	●	●
GV	650 Aquila	04 - 05	2	●	
GV	650 Aquila	06 -	2	●	●
GV	700 C	10 -	1	●	●
GV	1000 Cruiser	06 -	2	●	●
ITALJET					
	650 Bazooka	06 -	2	●	●
	650 Griffon	06 -	2	●	●
KYMCO					
CK	125	04 -	1	●	
DX	150 Custom	93 -	1	●	
	150 NSR	93 -	1	●	
MASH					
	125 Scrambler	13 - 15	1	●	
	125 Seventy Five Vintage	13 - 15	1	●	
	125 Seventy	12 - 15	1	●	
	250 Café Racer	14 - 15	1	●	
MEGELLI					
	125 M / R / S	08 -	1	●	
SYM					
	125 Wolf Legend	04 - 05	1	●	

Street	Sport	Racing	Enduro	MX	Off-road Racing	ATV

S4 A3+

2694

Dim. / Size

75.8 mm
50.2 mm
11 mm

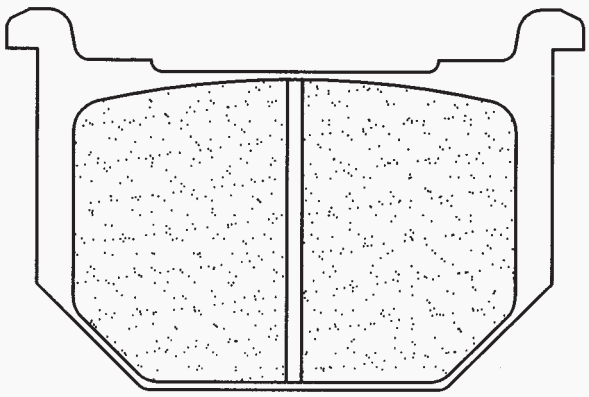

1 - 2 = Nombre de jeux avant / Number of front sets / Anzahl Sets / Numero blister / Numero des juegos
L = Gauche / Left / Links / Sinistra / Izquierda - R = Droite / Right / Rechts / Destra / Derecha

Street	Sport	Racing	Enduro	MX	Off-road Racing	ATV

2694 suite

S4 A3+

SUZUKI						
GN	250		85 - 97	1	●	
GNX	250	E	82 -	1	●	
GS	250	TT / TX	80 - 82	1	●	
GSX	250		80 - 82	1	●	
GN	400	T / TZ / X / XX / TT	80 -	1	●	
GSX	400	ET / EX / EZ	81 - 83	1	●	
GSX	400	F	81 -	1	●	
GSX	400	S / L	80 -	1	●	
GS	450	E / S / L	80 - 83	1	●	
SUZUKI						
GS	700	EF / ESF	85	2	●	
GSX	750	ESD/EFE/ESG/ESE/ESH/EFF	82 - 86	2	●	
GSX	750	ET / EX	80 - 81	2	●	
GS	850	GZ / GE / GG	82 - 85	2	●	
GS	1000	GT / GX / GLT / GLX	80 - 81	2	●	
GS	1100	GD / GZ / GLD / GLZ / GKZ	82 - 83	1	●	
GV	1200	GLG Madura	85 - 86	2	●	

Street	Sport	Racing	Enduro	MX	Off-road Racing	ATV

S4 A3+

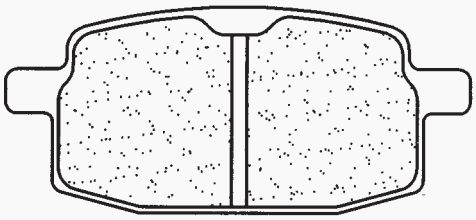

Dim. / Size

61 mm
27 mm
7 mm

THUMPSTAR						
	90	Junior	04 - 06	1	●	●
	110	Supa	04 - 06	1	●	●
	125	Expert	06	1	●	●
	125	Pro	05 - 06	1	●	●
	125	Road Ripper	06 -	1	●	●
YAMAHA						
TZR	80		92 -	1	●	

2696

Street	Sport	Racing	Enduro	MX	Off-road Racing	ATV

A3+

2699

Dim. / Size

59.3 mm
61.5 mm
13 mm

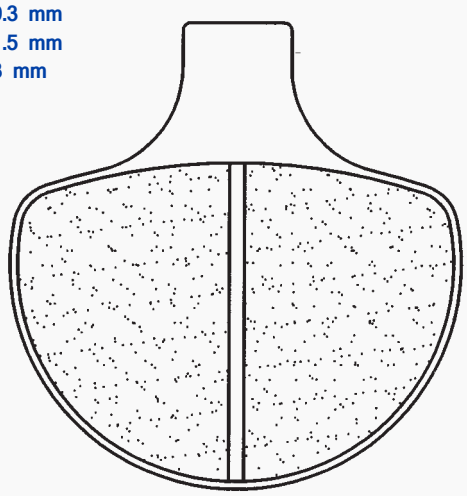

HARLEY DAVIDSON					
XLH	883	Sportster	84 - 87	1	●
XLH	883	Sportster	87 - 99	1	●
XLH	1100	Sportster	85 - 86	1	●
XLH	1100		87 - 88	1	●
XLX	1100		86	1	●
XLH	1200	Series	88	2	●
XLH	1200	Sportster	90 - 99	1	●
FLHS	1340	Electra Glide Sport	90	2	●
FLHT	1340	Electra Glide	85 - 86	2	●
FLHT	1340	Electra Glide Classic	87 - 99	2	●
FLHTC	1340	Electra Glide Classic	85 - 86	2	●
FLHTC	1340	Electra Glide Classic	93	2	●
FLHTC	1340	Electra Glide Classic	90 - 99	2	●
FLHTC	1340	Ultra Classic	90 - 99	2	●
HARLEY DAVIDSON					
FLST	1340	Heritage Softail	86 - 87	1	●
FLST	1340	Heritage Softail	90 - 99	1	●
FLSTC	1340	Heritage Softail Classic	90 - 99	1	●
FLSTF	1340	Fat Boy	90 - 99	1	●
FLSTN	1340	Heritage Softail Nost.	93 - 99	2	●
FLT	1340	Series	88 - 99	2	●
FLT	1340		84 - 85	1	●
FLT/H	1340	Series	86 - 87	2	●
FLTC	1340	Tour Glide Classic	85 - 86	1	●
FLTC	1340	Tour Glide Classic	90	2	●
FXDB	1340	Dyna Glide Daytona	91 - 99	1	●
FXDB	1340	Dyna Glide Sturgis	91 - 99	1	●
FXDB	1340	Sturgis	91 - 99	1	●
FXDL	1340	Dyna Low Rider	93 - 99	2	●
FXDWG	1340	Dyna Wide Glide	93 - 99	1	●
FXE	1340		85 - 86	1	●
FXLR	1340	Low Rider Custom	87 - 88	1	●
FXLR	1340	Low Rider Custom	93 - 99	1	●
FXR	1340	Sport Glide GTE	85 - 86	2	●
FXR	1340	Super Glide	90 - 99	1	●
FXR	1340	Super Glide	85 - 86	1	●
FXR	1340		87 - 88	1	●
FXRS	1340	Low Rider	85 - 86	2	●
FXRS	1340	Low Rider Sport	87 - 99	2	●
FXRS	1340	Low Rider Sport Edition	90 - 99	2	●
FXRS	1340	Low Rider Sport, Convert.	90 - 99	2	●
FXRT	1340	Sport Glide	85 - 86	2	●
FXRT	1340	Sport Glide	90 - 99	2	●
FXST	1340	Softail	84 - 86	1	●
FXSTC	1340	Softail Custom	85 - 86	1	●
FXSTC	1340	Softail Custom	88 - 99	1	●
FXSTS	1340	Springer Softail	90 - 99	1	●
FXTZ	1340	Series	88	2	●
FXWG	1340		87 - 88	1	●
FXWG	1340	Wide Glide	85 - 86	1	●
	1340	Dyna Glide Daytona	91 -	1	●
	1340	Dyna Glide Sturgis	91 -	2	●
FLSTS	1450	Heritage Springer	00 - 03	1	●
FLSTSC/FLSTSCI	1450	Springer Classic	05 -	1	●
FXSTS/FXSTSI	1450	Softail Springer	00 - 04	1	●
FXSTS/FXSTSI	1450	Softail Springer	05 -	1	●

1 - 2 = Nombre de jeux avant / Number of front sets / Anzahl Sets / Numero blister / Numero des juegos
L = Gauche / Left / Links / Sinistra / Izquierda - R = Droite / Right / Rechts / Destra / Derecha

Street	Sport	Racing	Enduro	MX	Off-road Racing	ATV

A3+

Dim. / Size

53.4 mm
68.8 mm
6.5 mm

2700

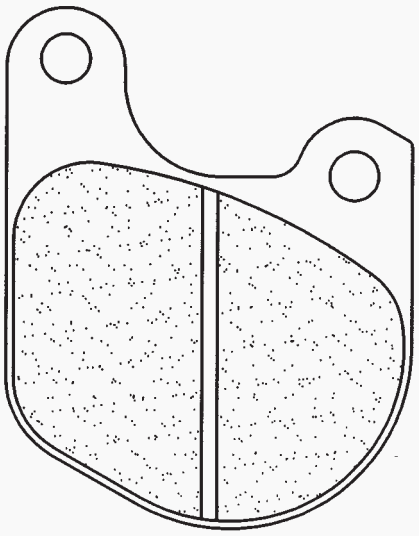

HARLEY DAVIDSON

XLH	883	79 - 81	2	●
XLH	883	82 - 83	2	●
XL	1000	78	1	●
XLCH	1000	78 - 80	1	●
XLH	1000 Roadster	83 - 85	2	●
XLH	1000 Sportster	79 - 82	2	●
XLH	1000 Sportster	83 - 85	2	●
XLS	1000 Anniversary	82	2	●
XLS	1000 Roadster	79 - 82	2	●
XLS	1000 Sportster	83	2	●
XLX	1000 61	83	2	●
XLX	1000 61	84	1	●
XR	1000	85	2	●
FX	1200	74 - 80	1	●
FXE	1200	74 - 80	1	●
FXS	1200	78 - 79	1	●
FLTH	1340 Tour Glide	84 -	1	●
FXB	1340 80	80 - 81	1	●
FXB	1340 Sturgis	82	2	●
FXE	1340 80	78 - 81	1	●
FXE	1340 Super Glide	83	1	●
FXE	1340	82	2	●
FXEF	1340 80 Fat Bob	79 - 81	1	●
FXR	1340 Super Glide	82 - 83	1	●
FXR	1340	78 - 81	1	●
FXRS	1340 Low Glide	82 - 84	2	●
FXRS	1340 Super Glide II	82 - 83	2	●
FXRT	1340 Super Glide II	83	1	●
FXS	1340 80	79 - 81	1	●
FXS	1340 Low Rider	82	2	●
FXSB	1340 Low Rider	83	2	●
FXWG	1340 80	80 - 81	1	●
FXWG	1340 Wide Glide	82	2	●
FXWG	1340 Wide Glide	83	2	●
FXWG	1340 Wide Glide	84	1	●

Street	Sport	Racing	Enduro	MX	Off-road Racing	ATV

RX3

Dim. / Size

74.5 mm
49 mm
12 mm

2701

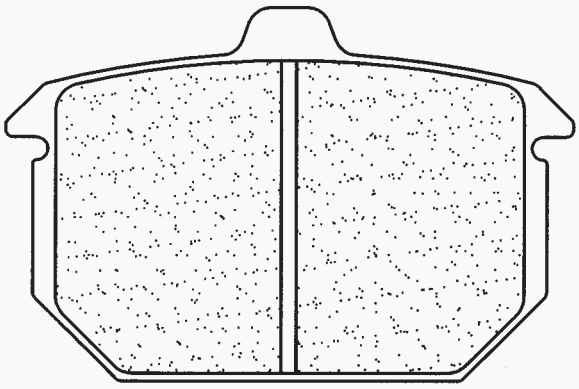

HARLEY DAVIDSON

XLH	883 Sportster	84 - 87	●
XLH	883	82 - 83	●
XLH	1000 Roadster	83 - 85	●
XLH	1000 Sportster	83 - 85	●
XLS	1000 Anniversary	82	●
XLS	1000 Sportster	83	●
XLX	1000 61	83	●
XLX	1000 61	84	●
XR	1000	85	●
XLH	1100 Sportster	85 - 86	●
XLX	1100	86	●
FLHT	1340 Electra Glide	85 - 86	●
FLHTC	1340 Electra Glide Classic	85 - 86	●
FLTC	1340 Tour Glide Classic	85 - 86	●
FXE	1340	85 - 86	●
FXR	1340 Sport Glide GTE	85 - 86	●
FXR	1340 Super Glide	82 - 83	●
FXR	1340 Super Glide	85 - 86	●
FXRS	1340 Low Glide	82 - 84	●
FXRS	1340 Low Rider	85 - 86	●
FXRS	1340 Super Glide II	82 - 83	●
FXRT	1340 Sport Glide	85 - 86	●
FXRT	1340 Super Glide II	83	●
FXSB	1340 Low Rider	83	●
FXST	1340 Softail	84 - 86	●
FXSTC	1340 Softail Custom	85 - 86	●
FXWG	1340	87 - 88	●
FXWG	1340 Wide Glide	85 - 86	●
FXWG	1340 Wide Glide	84	●

1 - 2 = Nombre de jeux avant / Number of front sets / Anzahl Sets / Numero blister / Numero des juegos
L = Gauche / Left / Links / Sinistra / Izquierda - R = Droite / Right / Rechts / Destra / Derecha

Street | Sport | Racing | Enduro | MX | Off-road Racing | ATV

2702

RX3

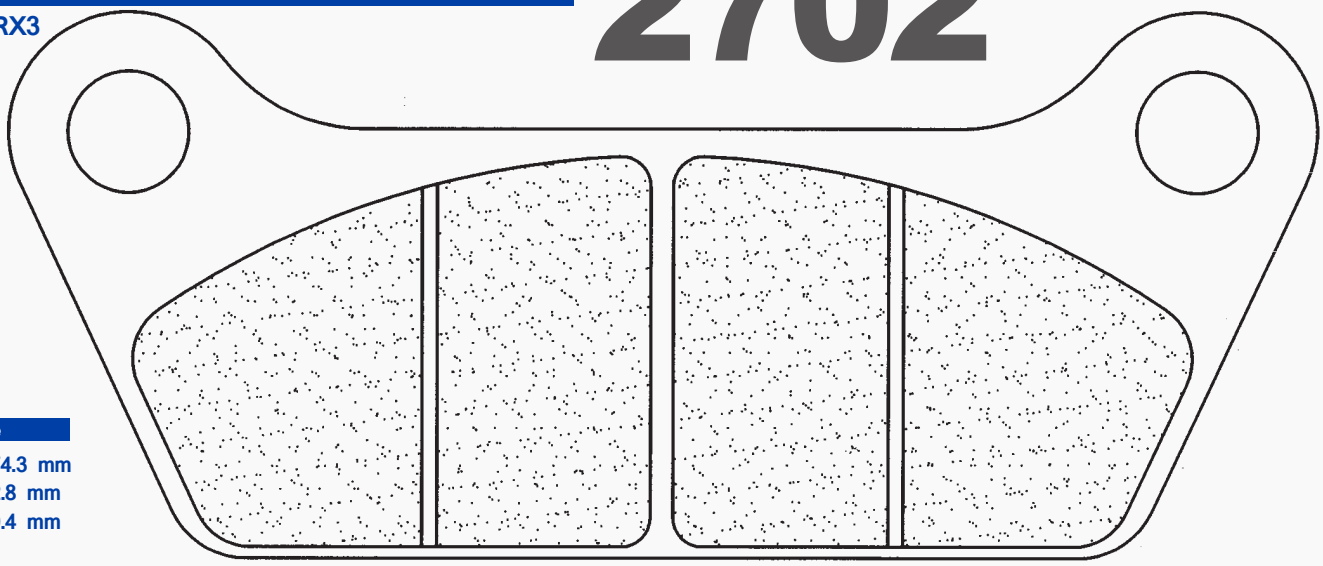

Dim. / Size
174.3 mm
72.8 mm
10.4 mm

HARLEY DAVIDSON			
FLH	1200	80	●
FLH	1340 80	81	●
FLH	1340 Classic	82 - 83	●
FLH	1340 Electra Glide Speciale	84	●
FLH	1340 Heritage	81	●
FLT	1340 80	80 - 81	●

HARLEY DAVIDSON			
FLT	1340 80 Classic	81	●
FLT	1340 Classic	82 - 83	●
FLT	1340	84 - 85	●
FLT	1340 Tour Glide	82	●
FLTH	1340 Tour Glide	84 -	●

Street | Sport | Racing | Enduro | MX | Off-road Racing | ATV

A3+ XBK5 C60

2711

Dim. / Size
74.7 mm
55.5 mm
8.2 mm

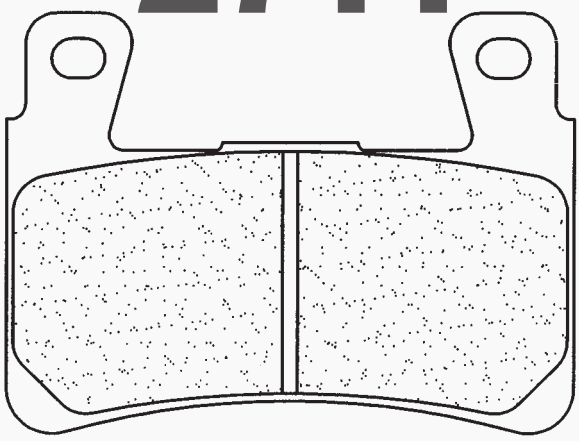

HARLEY DAVIDSON				
XR	1200 X	10 - 12	2	●
XR	1200	08 - 10	2	●
FLSTC	1584 Heritage Softail Classic	15 -	1	●
FLSTC	1584 Heritage Softail Deluxe	15 -	1	●
FLSTF	1584 Fat Boy	15 -	1	●
FXST	1584 Softail Standard	15 -	1	●
FXSB	1690 Breakout	15 -	1	●
FLSTF	1690 Fat Boy	15 -	1	●
FLS	1690 Softail Slim	15 -	1	●
HONDA				
CB	600 Hornet (Japan model)	98 -	2	●
CBR	600 F4 / F4 Sport	99 - 00	2	●
CBR	600 F4i / F4i Sport	01 - 10	2	●
CBR	600 RR	03 - 04	2	●
CBR	900 RR Fireblade	98 - 99	2	●
CBR	900 RR Fireblade (929)	00 - 01	2	●
CBR	900 RR Fireblade (954)	02 - 03	2	●
VTR	1000 SP-1	00 - 01	2	●
VTR	1000 SP-2	02 - 07	2	●
CB	1100 EX	14 -	2	●
CB	1300 F1	01	2	●
CB	1300 R	02 -	2	●
CB	1300 Super Four	03 - 09	2	●
CB	1300 Super Four ABS	05 - 09	2	●
KAWASAKI				
ZX6-R	636 Ninja (Rad.cal)	13 -	2	●

Street | Sport | Racing | Enduro | MX | Off-road Racing | ATV

RX3

2713

Dim. / Size
51.8 mm
59.7 mm
8.6 mm

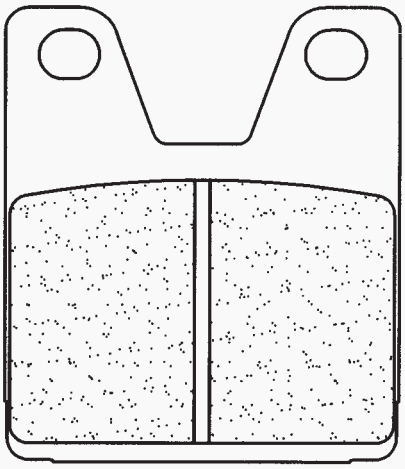

YAMAHA			
YZF	750 R7 (OW02)	99 - 01	●
YZF	1000 R1	98 - 01	●

1 - 2 = Nombre de jeux avant / Number of front sets / Anzahl Sets / Numero blister / Numero des juegos
L = Gauche / Left / Links / Sinistra / Izquierda - R = Droite / Right / Rechts / Destra / Derecha

Street	Sport	Racing	Enduro	MX	Off-road Racing	ATV

A3+ RX3

2718

Dim. / Size

71.1 mm
88.9 mm
6.6 mm

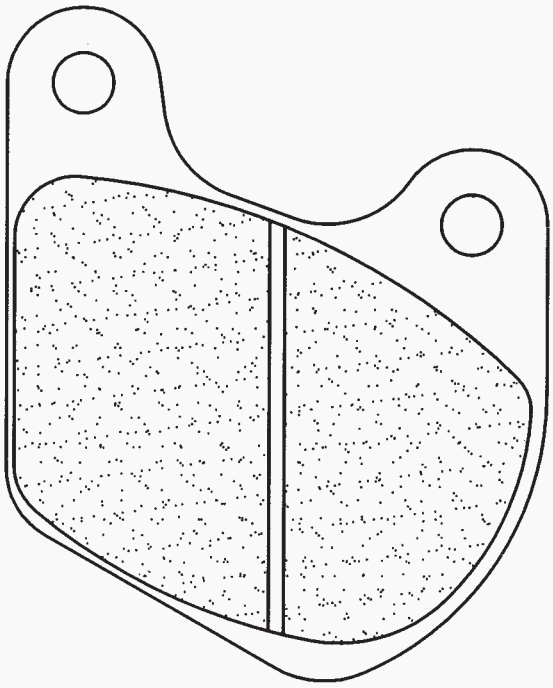

HARLEY DAVIDSON

XLH	883	79 - 81			●
XL	1000	78			●
XLCH	1000	78 - 80			●
XLH	1000 Sportster	79 - 82			●
XLS	1000 Roadster	79 - 82			●
FLH	1340 Classic	82 - 83	1	●	
FLH	1340 Electra Glide	82 - 83	1	●	
FLH	1340 Heritage	81	1	●	
FLT	1340 80	80 - 81	1	●	
FLT	1340 80 Classic	81	1	●	
FLT	1340 Classic	82 - 83	1	●	
FLT	1340 Tour Glide	82	1	●	

Street	Sport	Racing	Enduro	MX	Off-road Racing	ATV

XBK5 C60

2720

Dim. / Size

100.7 mm
34.4 mm
9 mm

AP RACING

6 Piston caliper (Road / Racing)	1	●	

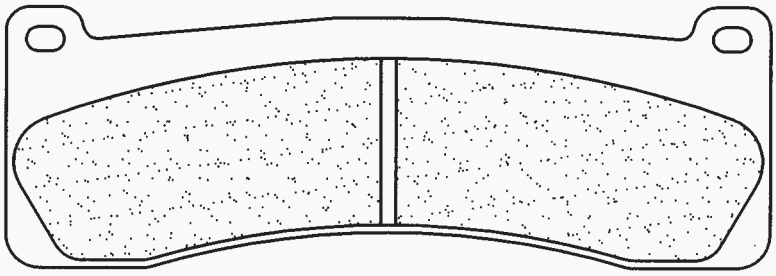

Street	Sport	Racing	Enduro	MX	Off-road Racing	ATV

MX10

2750

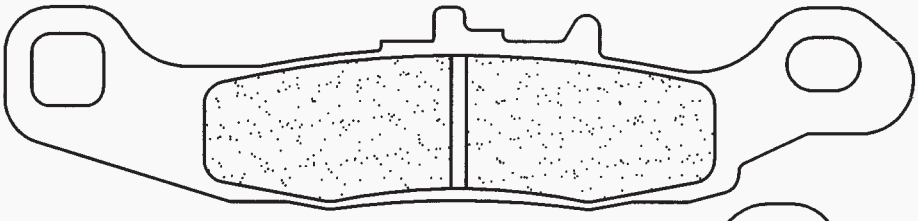

Dim. / Size

119.5 mm
26.5 mm
7 mm

Dim. / Size

94.5 mm
35.5 mm
7 mm

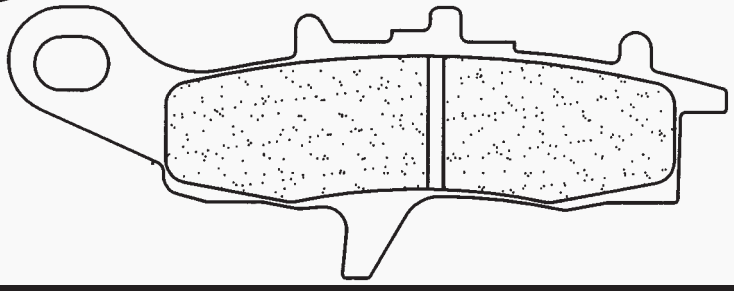

1 - 2 = Nombre de jeux avant / Number of front sets / Anzahl Sets / Numero blister / Numero des juegos
L = Gauche / Left / Links / Sinistra / Izquierda - R = Droite / Right / Rechts / Destra / Derecha

2750 suite

Street	Sport	Racing	Enduro	MX	Off-road Racing	ATV
				MX10		

KAWASAKI						
KX	80		97 - 00	1	●	
KX	85		01 -	1	●	
KX	100	B7	97 -	1	●	
KL	250	Super Sherpa	98 -	1	●	
SUZUKI						
RM	85	/ L	05 - 10	1	●	
RM	100		03	1	●	

2792

Street	Sport	Racing	Enduro	MX	Off-road Racing	ATV
S4				MX10		

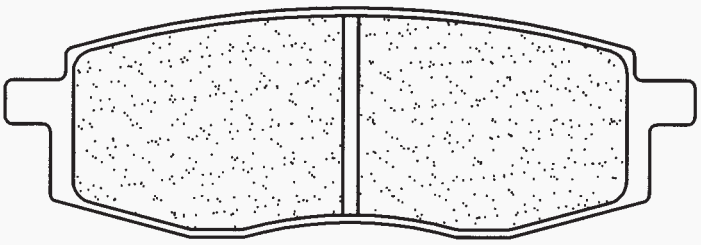

YAMAHA						
YZ	125	N / S / T	85 - 87	1	●	
YZ	125	U	88	1	●	
IT	200	S	86	1	●	
TT	250		87 - 92	1	●	
YZ	250	N / S / T (2T)	85 - 87	1	●	
YZ	250	U (2T)	88	1	●	
TT	350	(1TJ)	85 - 89	1	●	
TT	350	A (3GJ)	90 - 95	1	●	
YZ	490	N / S / T / U / W / A	85 - 90	1	●	
TT	600		90	1	●	

Dim. / Size

90.8 mm
30.2 mm
7.2 mm

2794

Street	Sport	Racing	Enduro	MX	Off-road Racing	ATV
S4 A3+						

Dim. / Size

78.9 mm
47 mm
7.3 mm

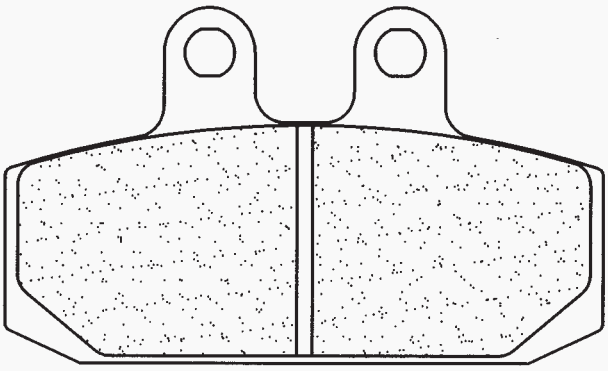

APRILIA						
MX	125	Cross	85	1	●	
	125	Red Rose	89	1	●	
	125	Tuareg	- 86	1	●	
	125	Tuareg Rally	86 - 88	1	●	
	125	Tuareg Rally	89	1	●	
ETX	125		- 86	1	●	
ETX	125		86 - 87	1	●	
	250	Tuareg Rally	86 -	1	●	
	350	Tuareg	86 - 87	1	●	
	350	Tuareg Wind	87	1	●	
ETX	350		- 86	1	●	
	600	Tuareg	86 - 87	1	●	
ETX	600		86 -	1	●	
CAGIVA						
	50	Blues	89	1	●	
	125	Blues	92 - 95	1	●	
	125	Roadster	94 -	1	●	
	200	Roadster	96 -	1	●	
FANTIC						
	250	Raider	85	1	●	
GARELLI						
	125	Tiger XLE	86 -	1	●	
GILERA						
ER	125	Rally	87	1	●	
MXR	125		90	1	●	
RRT	125	Nebraska	87	1	●	
RTX	125		86	1	●	
RX	125	Arizona Hawk	85	1	●	
X 1	125		89	1	●	
XR2	125		90	1	●	
	125	Cougar	99 -	1	●	
	125	Fast Bike	88 -	1	●	
	125	KK / KR / KZ	86 -	1	●	
	125	R1 / R1S	90 -	1	●	
	200	Arizona Hawk	85	1	●	
	200	ER	87	1	●	

GILERA						
	200	Fast Bike	87 -	1	●	
XRT	350		90 -	1	●	
	350	Dakota	85 -	1	●	
	500	Dakota	86	1	●	
RC	600		88	1	●	
XRT	600		89	1	●	
HONDA						
CA	125	Rebel	97 -	1	●	
CLR	125	CityFly	98 -	1	●	
CRM	125	/ R	90 - 98	1	●	
MTX	125	Camel (Italy)	88 -	1	●	
MTX	125	R (Italy)	86	1	●	
NS	125	(Italy)	85 - 88	1	●	
NSR	125	F / R	90 - 92	1	●	
NSR	125	R (Italy)	89 -	1	●	
NX	125	Transcity	90 - 98	1	●	
RTV	125	NRS (Italy)	87 -	1	●	
XL	125	R / PD / (Italy)	85	1	●	
XL	125	R / PD / Italy EX	87 -	1	●	
XL	200	R / PD / (Italy)	85 -	1	●	
MOTO GUZZI						
V7	750	Clubman Racer	12 - 14			●
V7	750	III	17 -			●
MOTO MORINI						
	350	Kanguro	87	1	●	
	501	Camel	88	1	●	
SACHS						
ZZ	125	Funbike	98 -	1	●	
ZX	125		98 -	1	●	
SIMSON						
	125	SR	01 -	1	●	

1 - 2 = Nombre de jeux avant / Number of front sets / Anzahl Sets / Numero blister / Numero des juegos
L = Gauche / Left / Links / Sinistra / Izquierda - R = Droite / Right / Rechts / Destra / Derecha

Street	Sport	Racing	Enduro	MX	Off-road Racing	ATV

ATV1

2799

Dim. / Size

56 mm
37.1 mm
10.2 mm

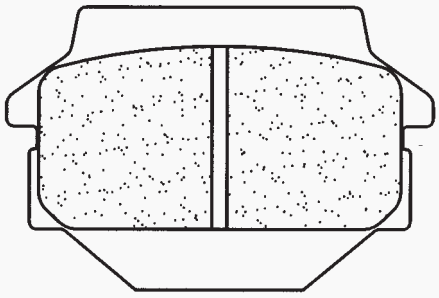

Dim. / Size

84.9 mm
34.9 mm
8 mm

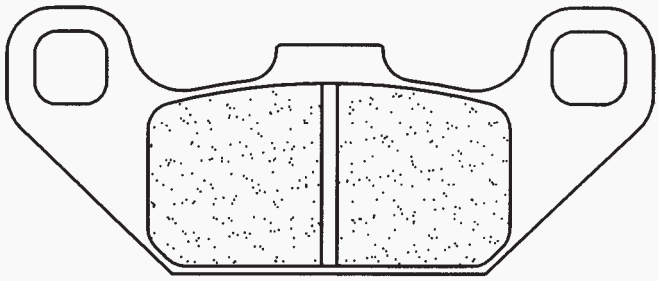

KAWASAKI					
KSF	250	A1-A17 Mojave	87 -	2	●
KXF	250	A1 / A2 Tecate	87 - 88	2	●
KXT	250	B2 Tecate Trike	85 -	1	●
KEF	300	A1-A6 Lakota	95 -	2	●
SUZUKI					
LT	230	EH/EJ/EK/EL/EM/EN/EP	86 - 93	2	●
LT	230	SF / SG / SH / SJ	85 - 88	2	●
LT	250	RF / RG / RH	85 - 87	2	●
LT	250	RJ/RK/RL/RM/RN	88 - 94	2	●
LT	250	SK / SL	89 - 90	2	●
LT	500	RH / RJ / RK / RL	87 - 90	2	●

Street	Sport	Racing	Enduro	MX	Off-road Racing	ATV

S4 A3+

2801

Dim. / Size

119.7 mm
51.8 mm
7.8 mm

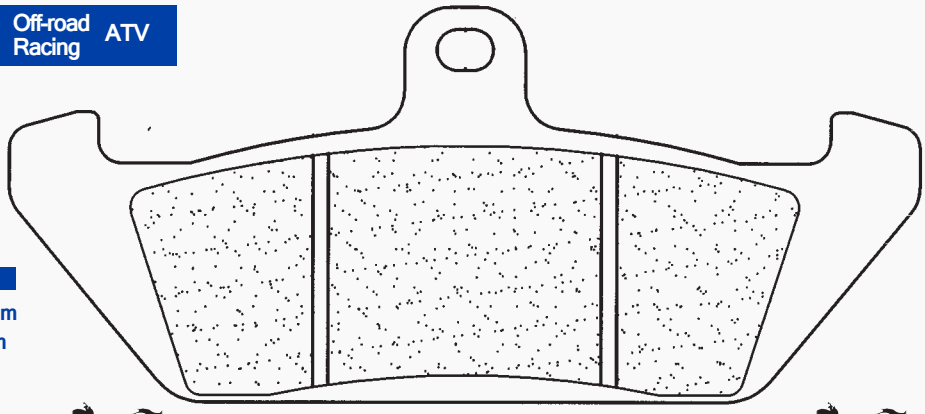

APRILIA					
	350	Tuareg Wind	88	1	●
	600	Tuareg Wind	88	1	●
CAGIVA					
	350	Elefant	86 -	1	●
	650	Elefant	86 -	1	●
	750	Lucky Explorer	88	1	●
DUCATI					
	350	Indiana	86 -	1	●
	650	Indiana	86 -	1	●
	750	Indiana	87 - 90	1	●

LAVERDA					
OR	600	Atlas	86 -	1	●
MOTO MORINI					
	350	Indiana	88	1	●
	501	Excalibur	89	1	●
	501	New York	89	1	●
	650	Indiana	88	1	●
	750	Indiana	88	1	●

Street	Sport	Racing	Enduro	MX	Off-road Racing	ATV

S4 A3+

2802

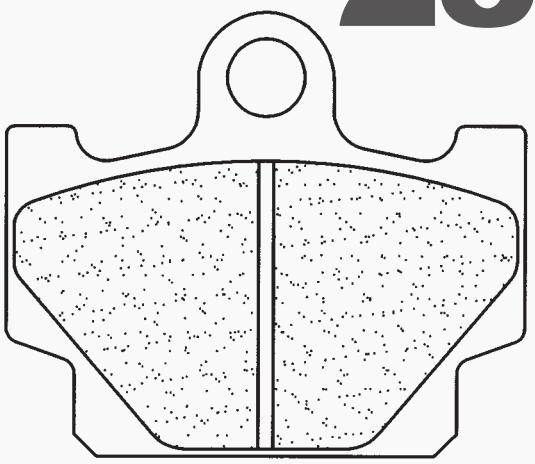

Dim. / Size

68 mm
58.6 mm
10.7 mm

YAMAHA					
DT	80	LC (37A)	81 - 84	1	●
RD	80	LC	81 - 82	1	●
RX	100		84 -	1	●
RX	115	S	82 - 84	1	●
RD	125	LC	82 - 84	1	●
SR	125	SE	92 - 96	1	●
RX	135	(13X)	81	1	●
XV	240	Virago	92 -	1	●
RD	250	LC	83 -	1	●
RZ	250	(4L3)	80 -	1	●
RZ	250	R (29L)	80 -	2	●
SR	250	Classic	96 - 00	1	●
XV	250	Virago	88 - 90	1	●
XV	250	Virago	93 - 95	1	●
RD	350	YPVS	83 - 84	2	●
RZ	350	L / N / NC	84 - 85	2	●
XJ	400		82	2	●
XS	400	DOHC	82	1	●
XS	400	RJ / RK / J / K	83 - 83	1	●
XS	500	DOHC	82 -	1	●
XV	500		83 -	1	●
XZ	550		82 - 84	2	●
XT	600	Z Ténéré	84	1	●
XT	600		84 - 86	1	●
XJ	650	LK Seca	83	2	●
XJ	650	Turbo	82	2	●

1 - 2 = Nombre de jeux avant / Number of front sets / Anzahl Sets / Numero blister / Numero des juegos
L = Gauche / Left / Links / Sinistra / Izquierda - R = Droite / Right / Rechts / Destra / Derecha

Street	Sport	Racing	Enduro	MX	Off-road Racing	ATV

S4 A3+

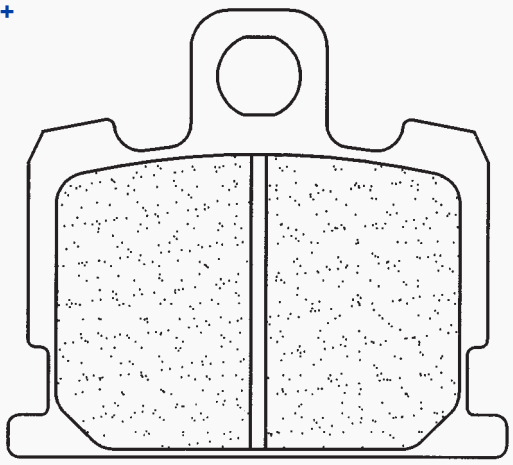

YAMAHA					
RD	50 / MX	81 - 87	1	●	
RD	80 Air Cooled	81 -	1	●	
RX	80 SE	82 -	1	●	
RD	250 LC	81 - 82	1	●	
RD	350 LC (4LO)	81 - 82	2	●	
XJ	550 H/J/K/RH/RJ/RK Maxim / Seca	81 - 83	1	●	
XJ	550	81 - 84	2	●	
XJ	750 RH / RJ / RK / Seca / Maxim	81 - 83	2	●	
XJ	750	82 - 84	2	●	
XV	920 J Virago	82	2	●	
XJ	1100 Maxim	81 -	2	●	
XS	1100 S	81	2	●	

Dim. / Size

66 mm
59 mm
10 mm

2807

Street	Sport	Racing	Enduro	MX	Off-road Racing	ATV

RX3

2813

Dim. / Size

59.7 mm
57.1 mm
8 mm

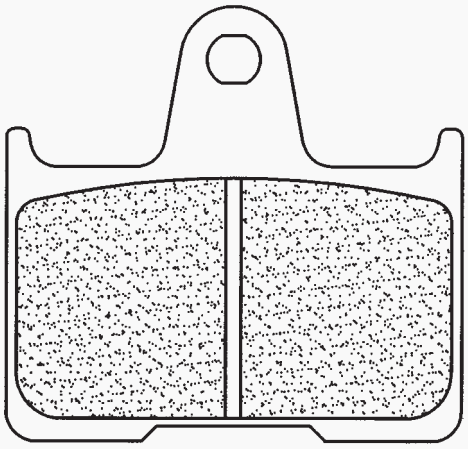

HARLEY DAVIDSON			
XL	883 L Superlow	14 -	●
XL	883 N Iron	14 -	●
XL	883 R Roadster	14 -	●
XL	1200 C / CA / CB / CP Custom	14 -	●
XL	1200 Superlow T	15 -	●
XL	1200 V - Seventy Two	14 -	●
XL	1200 X - Forty Eight	14 -	●
XL	1200 CX - Roadster	16 -	●
HONDA			
CB	1300 F1	01	●
CB	1300 R	02 -	●
CB	1300 SF	98 - 00	●
CB	1300 X-4	97 - 00	●
KAWASAKI			
ZX7-RR	750 Ninja	96 - 02	●
GTR	1400 (Rad.cal)	07 - 09	●
ZZR	1400 (Rad.cal)	06 - 11	●
ZZR	1400 (Rad.cal)	12 - 15	●
ZZR	1400 Performance MY	16 -	●
ZZR	1400 Performance Sport	16 -	●
MZ / MUZ			
	1000 S	03 - 07	●
	1000 SF	05 - 07	●
	1000 SFX	07 -	●

MZ / MUZ				
	1000 SN	05 -		●
	1000 ST	07 -		●
SUZUKI				
GSX-R	600 K4 / K5 (Rad.cal)	04 - 05		●
GSF	650 Bandit / Bandit S	05 - 06	L	●
GSF	650 Bandit ABS / Bandit S ABS	05 - 06	L	●
GSX-R	750 K4 / K5 (Rad.cal)	04 - 05		●
GSX-R	1000 K1 / K2	01 - 02		●
GSX-R	1000 K3 (Rad.cal)	03		●
GSX-R	1000 K4 (Rad.cal)	04		●
GSX-R	1000 K5 / K6 (Rad.cal)	05 - 06		●
GS	1200 SS (GV78A)	01		●
GSX	1400	01 - 07		●

Street	Sport	Racing	Enduro	MX	Off-road Racing	ATV

S4 A3+ RX3

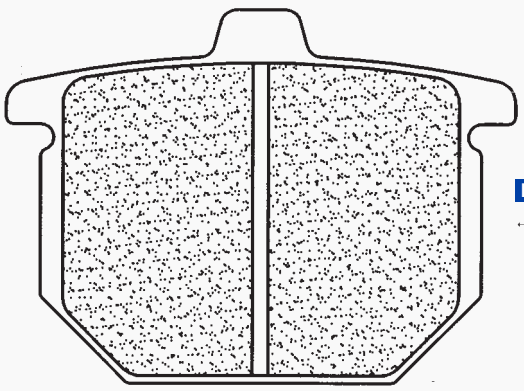

Dim. / Size

66.9 mm
49.1 mm
9.5 mm

HONDA					
MT	125 R	78 -	1	●	
CB	400 N	78 - 81	1	●	
CB	400 NZ	- 79	1	●	
CX	400	81	1	●	
GL	400	77 - 80	1	●	
CX	500	78 - 80	1	●	
CB	750 F	77 - 80	2	●	●
CB	750 SS	77 - 79			●
CB	900 F	78 - 80	2	●	●
GL	1000 Goldwing	81 -	2	●	●
GL	1000 Grand Touring Goldwing	81 -	2	●	●
GL	1000 K3 Goldwing	78 - 79	2	●	
CBX	1000	78 - 80	2	●	●
GL	1100 A Goldwing	79 - 81	2	●	●

2814

1 - 2 = Nombre de jeux avant / Number of front sets / Anzahl Sets / Numero blister / Numero des juegos
L = Gauche / Left / Links / Sinistra / Izquierda - R = Droite / Right / Rechts / Destra / Derecha

Street	Sport	Racing	Enduro	MX	Off-road Racing	ATV

RX3 **ATV1**

2827

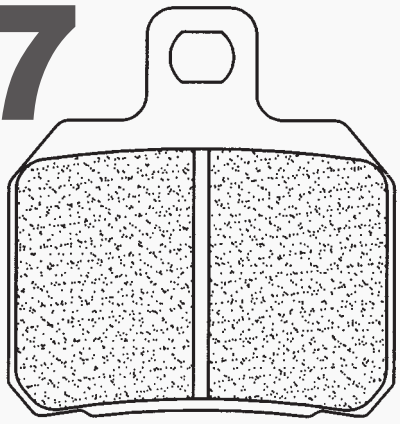

Dim. / Size

50.7 mm
53.8 mm
7.8 mm

APRILIA				
ETV	1000 Caponord	01 - 06		●
ETV	1000 Caponord Rally Raid	04 -		●
RSV	1000 Factory Pista	04 -		●
RSV	1000 Nera	04 -		●
RSV	1000 R	00		●
RSV	1000 R	01 - 02		●
RSV	1000 R Factory Replica	04 -		●
RSV	1000 SP	00 -		●
RSV	1000 Tuono Fighter	03 - 05		●
RSV	1000 Tuono R	03		●
RSV	1000 Tuono R Factory	04 -		●
RSV	1000	97 - 01		●
RSV	1000	02 -		●
RSV4	1000 Factory	09 - 10		●
RSV4	1000 Factory APRC	11 -		●
RSV4	1000 R	10		●
RSV4	1000 R APRC	11 -		●
RSV4	1000 RR	15 -		●
SL	1000 Falco	00 -		●
V4R	1000 Tuono / Tuono APRC	11 - 13		●
V4R	1000 Tuono APRC ABS	13 -		●
V4RR	1100 Tuono / Tuono Factory	15 -		●
BENELLI				
BN	302	14 -		●
	502 TRK / TRK X	16 -		●
BN	600 GT	14		●
BN	600 i	13		●
BN	600 R	14		●
2ue	756 Cue	07 - 09		●
2ue	756 Cue	10 -		●
TnT	899 / Sport	07 -		●
Tre-K	899	07 -		●
	900 Tornado Tre	03 -		●
	900 Tornado Tre RS (Rad.cal)	04 -		●
Tre-K	1130 Amazonas	07 -		●
TNT	1130 Café Racer	05 -		●
TNT	1130 Officine	07 -		●
TNT	1130 Sport / Titanium	05 -		●
	1130 Tornado	08 -		●
TNT	1130	05 -		●
Tre-K	1130	06 -		●
BIMOTA				
DB5	992 Mille	05 - 07		●
DB6	992 Delirio	05 - 07		●
BB3	1000	14 -		●
DB5	1000 S	07 -		●
DB5	1000 Delirio	07 -		●
DB5	1000 Mille	05 -		●
DB5	1078 S / R	07 - 09		●
3D	1078 Tesi	16 -		●
DB5E	1078 Desiderio	12 - 13		●
DB6	1078 Delirio / Delirio R	07 - 11		●
DB11	1098 VLX	12 - 13		●
DB11	1098	12 - 13		●
DB7	1098	08		●
DB9	1098 Brivido	12 - 13		●
DB12	1198 B.Tourist	12 - 13		●
DB8	1198 / SP	10 - 14		●
BOMBARDIER				
	500 Traxter 4x4	99 - 01	2 ●	●
CAGIVA				
	650 Raptor	01 -		●
	650 V-Raptor	01 -		●
	1000 Raptor	00 -		●
	1000 V-Raptor	00 -		●
	1000 X3 Raptor	04 -		●
	1000 X-Raptor	03 -		●
	1000 Xtra Raptor	02 -		●
DERBI				
	659 Mulhacén	05		●
	659 Mulhacén	06 -		●
	659 Mulhacén Cafe	08 -		●
DUCATI				
	620 Multistrada	05 -		●
	620 Multistrada Dark	05 -		●
	620 Sport	03 -		●
M	696 Monster	08 -		●
	749 / S	03 -		●
	749 R / Dark	04 -		●
	750 Sport / Supersport	00 - 02		●
	796 Hypermotard	10 -		●
	796 Monster	10 -		●
	800 Sport / Supersport	03		●
	800 Supersport	04		●
	821 Hypermotard	13 -		●
	821 Hypermotard SP	13 -		●
	821 Hyperstrada	13 -		●
	821 Monster / Monster Dark	15 -		●
	848 Evo	10 -		●
	848 Evo Corse SE	12-		●
	848 Street Fighter	12-		●
	848 Street Fighter Evo SP	12-		●
	848	08 -		●
	899 Panigale	13 -		●
	900 Monster / Monster i.e	00 - 02		●
MH	900 e	01 -		●
	900 Supersport	98 - 02		●
	916 ST4	99 - 01		●
	944 ST2	97 - 03		●
	939 Hypermotard / SP	16 -		●
	939 Hyperstrada	16 -		●
	939 Supersport / S	17 -		●
	959 Panigale / Corse	16 -		●
D16RR	990 Desmosedici RR	07		●
	992 ST3	04 -		●
	992 ST3s ABS	06 -		●
	996 ST4s	02 -		●
	996 ST4s ABS	03 -		●
	998 Monster S4RS	06		●
	999 / S / R	03 -		●
	999 Monster S4R/RS	07 - 08		●
	999 R Xerox	06 -		●
SportClassic	1000 GT	05 -		●
SportClassic	1000 GT Touring	09 -		●
SportClassic	1000 Sport / Biposto	07 -		●
	1000 Hypermotard	06 -		●
	1000 Monster S2R	06 - 08		●
	1000 Monster S4R	06 -		●
	1000 Monster S4RS Testatretta	06 -		●
	1000 Multistrada DS	03 - 05		●
	1000 Multistrada S DS	05 - 06		●
	1098 / S	07 - 08		●
	1098 R	08		●
	1098 R Bayliss LE	09		●
	1098 Streetfighter	09 -		●
	1098 Streetfighter S	09 -		●
	1100 Hypermotard	07 -		●
	1100 Hypermotard Evo	10 -		●
	1100 Hypermotard Evo SP	10 -		●
	1100 Hypermotard S	07 -		●
	1100 Monster / Monster S	09 -		●
	1100 Monster Evo	11 -		●
	1100 Multistrada / Multistrada S	07 - 09		●
	1103 Panigale V4 / S / Special	18 -		●
	1198 / S / R Corse	09 -		●
	1199 Panigale / S / R / Senna	12 - 14		●
	1199 Superleggera	14		●
	1200 Monster	14 -		●
	1200 Monster R	15		●
	1200 Monster S	14 -		●
	1200 Multistrada ABS	10 - 13		●
	1200 Multistrada Granturismo	13		●
	1200 Multistrada S Pikes Peak	11 - 14		●
	1200 Multistrada S Sports Edition	10 - 12		●

1 - 2 = Nombre de jeux avant / Number of front sets / Anzahl Sets / Numero blister / Numero des juegos
L = Gauche / Left / Links / Sinistra / Izquierda - R = Droite / Right / Rechts / Destra / Derecha

2827 suite

Street | Sport | Racing | Enduro | MX | Off-road Racing | ATV

RX3 | ATV1

DUCATI				
	1200 Multistrada S Touring Edition	10 - 14		●
	1200 Multistrada Standard Edition	10 - 11		●
	1299 Panigale R FE	18 -		●
	1299 Panigale / S / R	15 -		●
GILERA				
	600 Supersport	03 -		●
KAWASAKI				
H2	1000 Ninja / Ninja R	15 -		●
KTM				
RC8	1190 R	09 -		●
RC-8	1190	08 -		●
	1290 Super Duke R	14 -		●
	1290 Super Duke GT	16 -		●
LAVERDA				
TTS	800	99 -		●
SFC	1000 (Rad.cal)	04 -		●
MONDIAL				
	1000 Evo (Rad.cal)	04 -		●
	1000 Piega	03 -		●
	1000 RZ Nuda	04 -		●
	1000 Starfighter (Rad.cal)	04 -		●
MOTO GUZZI				
	750 Breva i.e	03 -		●
V7	750 Clubman Racer	10 - 11		●
	750 Nevada / Nevada Club	03 - 04		●
	750 Nevada Classic i.e	05 -		●
	750 Nevada Club	98 - 01		●
	750 Nevada Touring	07 -		●
V9	850 Bobber / Roamer	16 -		●
	1200 Corsa MGS-01	07 -		●
MOTO MORINI				
	998 9 1/2	06 - 10		●
	1187 MM3	07		●
	1200 Corsaro	05 - 10		●
	1200 Corsaro Avio	08 - 09		●

MOTO MORINI				
	1200 Corsaro Veloce	07 - 09		●
	1200 Rebello Giubileo	12 - 13		●
	1200 Scrambler	08 - 10		●
	1200 Sport	08 - 10		●
MV AGUSTA				
	675 Brutale B3	12 -		●
	675 F3	12 - 14		●
	675 F3	15 -		●
	675 F3 Oro	12 - 14		●
	675 F3 RC	16 -		●
	800 Brutale	13 -		●
	800 Brutale Dragster / Dragster RR	15 -		●
	800 Brutale RR	15 -		●
	800 Rivale	13 -		●
	800 Stradale	15 -		●
	800 Turismo Veloce	14 -		●
	800 Turismo Veloce Lusso	14 -		●
NORTON				
	961 Commando Café Racer	10 - 14		●
	961 Commando SE	10 - 11		●
	961 Commando SF	13 - 14		●
	961 Commando Sport	10 - 14		●
VOXAN				
	1000 Black Magic	04 - 08		●
	1000 Café-Racer	02 - 05		●
	1000 Café-Racer	06 - 08		●
VB1	1000 EVO	03 - 04		●
	1000 Roadster	02 - 05		●
	1000 Roadster	06 - 08		●
	1000 Street Scrambler	03 - 05		●
	1000 Street Scrambler	07 - 08		●
	1200 GTV	08 -		●

2828

Street | Sport | Racing | Enduro | MX | Off-road Racing | ATV

S4 | RX3

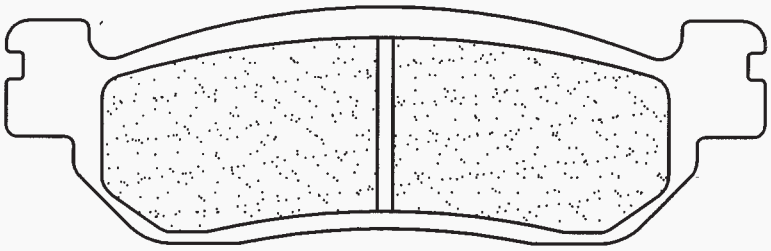

YAMAHA					
TW	125	99 - 02	1	●	
TW	125 R / S	03 - 04	1	●	
TW	200	01 - 02	1	●	
ST	225 Bronco	97	1	●	
TW	225	03	1	●	
XT	225	05 -	1	●	
XG	250 Tricker	04 - 06	1	●	
XT	250 X Supermotard	06 - 08	1	●	
YZF	600 R6	99 - 02			●
YZF	1000 R1	02 - 03			●

Dim. / Size

99.8 mm
31 mm
9 mm

2840

Street | Sport | Racing | Enduro | MX | Off-road Racing | ATV

A3+

BENELLI				
	900 Sei	81 - 83	2	●
BMW				
R65/1	650	86 -	1	●
R80	800 GS	88 - 93	1	●
K100	1000 GS	87 - 93	1	●
R100	1000 GS	86 - 94	1	●
R100	1000 RT	91 -	2	●

Dim. / Size

59.6 mm
58.5 mm
9 mm

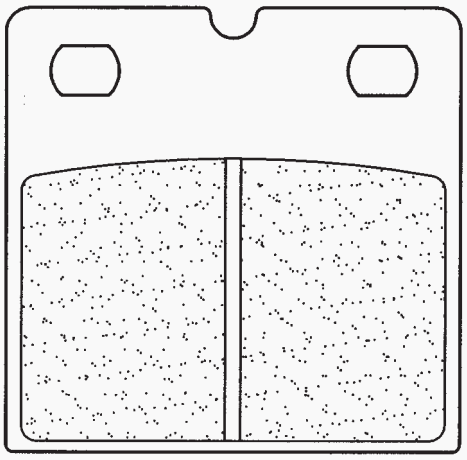

1 - 2 = Nombre de jeux avant / Number of front sets / Anzahl Sets / Numero blister / Numero des juegos
L = Gauche / Left / Links / Sinistra / Izquierda - R = Droite / Right / Rechts / Destra / Derecha

Street	Sport	Racing	Enduro	MX	Off-road Racing	ATV
S4 A3+ RX3						

2847

Dim. / Size

67.3 mm
49.9 mm
11 mm

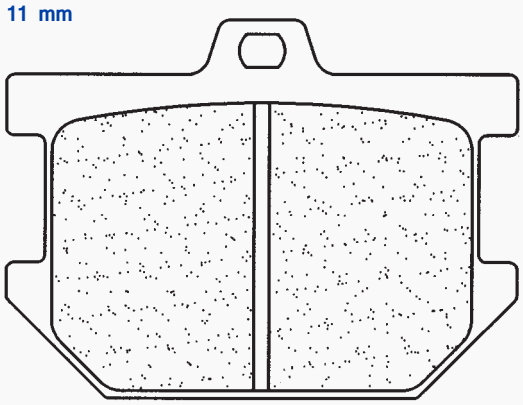

YAMAHA					
XS	250 C	77 - 78	1	●	●
XS	250 D / E	79 - 81	1	●	
XS	360 C / D	76 -	1	●	●
XS	400 C / E / F	77 - 79	1	●	●
SR	500	78 - 82	1	●	
XS	500 C / D	78 - 79	1	●	●
XJ	650 RJ Seca	82	2	●	
XJ	650	80 - 84	2	●	
XS	650 D1E / F / F2	77 - 79	2	●	
XS	650 G / H / J / K	80 - 82	2	●	
XS	650 SE	79 - 80	1	●	●
XS	650 SE	81	1	●	
XS	650 SJ / SK Heritage	82 -	1	●	
XS	750 SE	79 - 80			●
XS	750	77 - 79	2	●	●
XS	850	80	2	●	●
XV	1000 TR1	81 -	2	●	
XS	1100 S	81			●
XS	1100	78 - 80	1	●	●

Street	Sport	Racing	Enduro	MX	Off-road Racing	ATV
A3+	XBK5	C60				

2899

Dim. / Size

91.7 mm
51.6 mm
8.2 mm

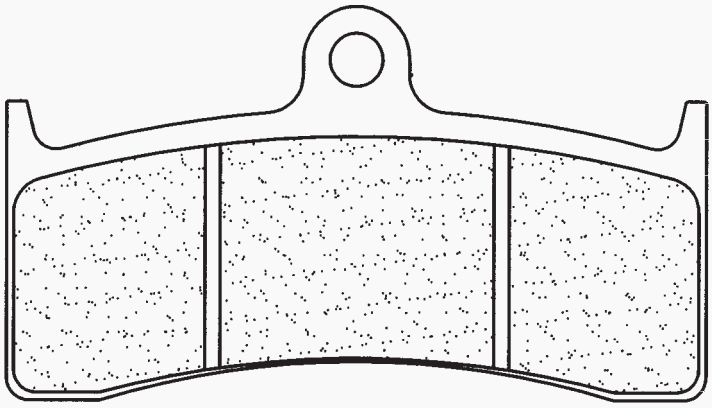

BUELL				
M2	1200 Cyclone	98 - 02	1	●
S1	1200 Lightning	98 - 02	1	●
S1	1200 Whitelightning	98 - 02	1	●
S3	1200 Thunderbolt	98 - 02	1	●
S3T	1200 Thunderbolt	98 - 02	1	●
X1	1200 Lightning	98 - 02	1	●
HONDA				
CB	1300 SF	98 - 00	2	●
KAWASAKI				
ZX7-RR	750 Ninja	96 - 02	2	●
MV AGUSTA				
	750 Brutale (All models) (Nissin)	03 - 08	2	●
	750 F4 (All models) (Nissin)	99 - 03	2	●
	910 Brutale S (Nissin)	05 - 08	2	●
	1000 F4 (All models) (Nissin)	04 - 06	2	●
NISSIN				
6 Piston caliper (Road / Racing)			1	●
PERFORMANCE MACHINE				
Caliper 122x6 QC = 0051-2901/2902 (Road)			1	●
YAMAHA				
YZF	750 R7 (OW02) "Race Kit"	99 - 01	2	●

Street	Sport	Racing	Enduro	MX	Off-road Racing	ATV
RX3						

2900

Dim. / Size

94 mm
36 mm
10.1 mm

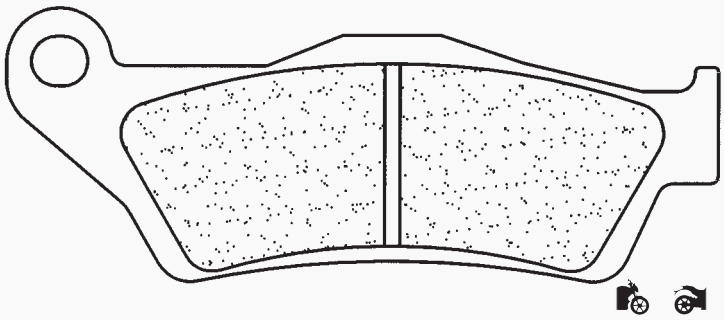

BMW			
F	800 ST	06 -	●
R	850 C	98 -	●
R	850 GS	98 -	●
R	850 R	03 -	●
R	850 R	95 - 02	●
R	850 RT	98 - 00	●
R	850 RT ABS	01 -	●
R	1100 GS	00 - 01	●
R	1100 GS	94 - 99	●
R	1100 GS ABS	95 - 01	●
R	1100 R	95 -	●
R	1100 RS	94 -	●
R	1100 RT	95 -	●
R	1100 RT ABS	95 -	●
R	1100 S	99 - 00	●
R	1100 S (Brembo)	01 -	●
R	1100 S ABS (Tokico)	01 -	●
R	1150 GS	00 - 01	●
R	1150 GS / GS Adventure	02 -	●
R	1150 R	01 -	●
R	1150 R Rockster	03 -	●
R	1150 RS	01 -	●

BMW			
R	1150 RT ABS	01 -	●
HP2	1200 Enduro	06 -	●
HP2	1200 Megamoto	07 -	●
K	1200 GT ABS	05 -	●
K	1200 R	05 -	●
K	1200 R Sport	07 -	●
K	1200 RS	02 -	●
K	1200 S	05 -	●

1 - 2 = Nombre de jeux avant / Number of front sets / Anzahl Sets / Numero blister / Numero des juegos
L = Gauche / Left / Links / Sinistra / Izquierda - R = Droite / Right / Rechts / Destra / Derecha

2900 suite

Street	Sport	Racing	Enduro	MX	Off-road Racing	ATV

RX3

BMW			
R	1200 C	98 -	●
R	1200 GS	04 - 12	●
R	1200 R	06 - 14	●
R	1200 RT	05 - 07	●
R	1200 RT	07 - 09	●
R	1200 RT	10 - 13	●
R	1200 S	05 -	●
R	1200 ST	05 -	●
K	1300 GT	09 -	●
K	1300 R	09 -	●
BMW			
K	1300 S	09 -	●
K	1300 S Motorsport	15 -	●
DUCATI			
	950 Multistrada	17 -	●
	1200 Multistrada Enduro	16 -	●
	1260 Multistrada	18 -	●
	1260 Multistrada S / S D-air / Pikes Peak	18 -	●

Street	Sport	Racing	Enduro	MX	Off-road Racing	ATV

MX10

2914

SUZUKI				
RM	80 T	96 - 01	1	●
RM	85 / L	02 - 04	1	●
DR-Z	125 L	03 - 09	1	●

Dim. / Size
75.7 mm
40.6 mm
8.2 mm

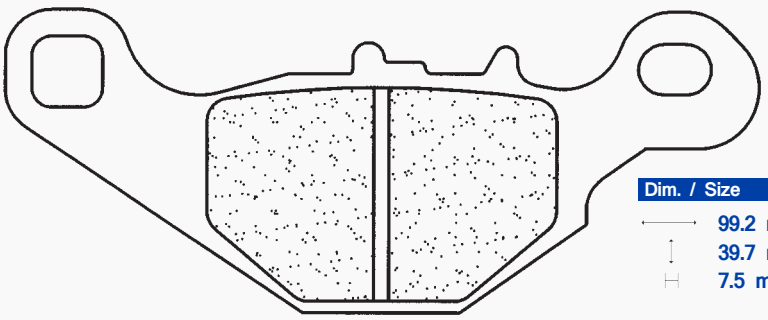

Dim. / Size
99.2 mm
39.7 mm
7.5 mm

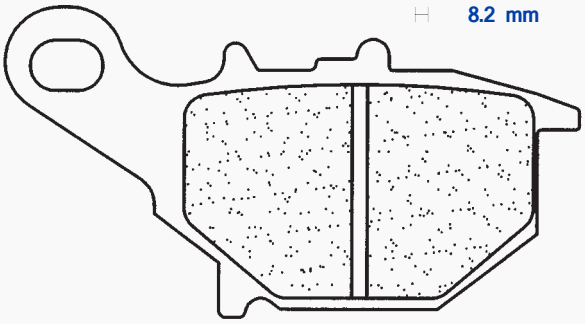

Street	Sport	Racing	Enduro	MX	Off-road Racing	ATV

XBK5 C60

SPIEGLER			
8 Piston caliper (Road / Racing)		1	●

2919

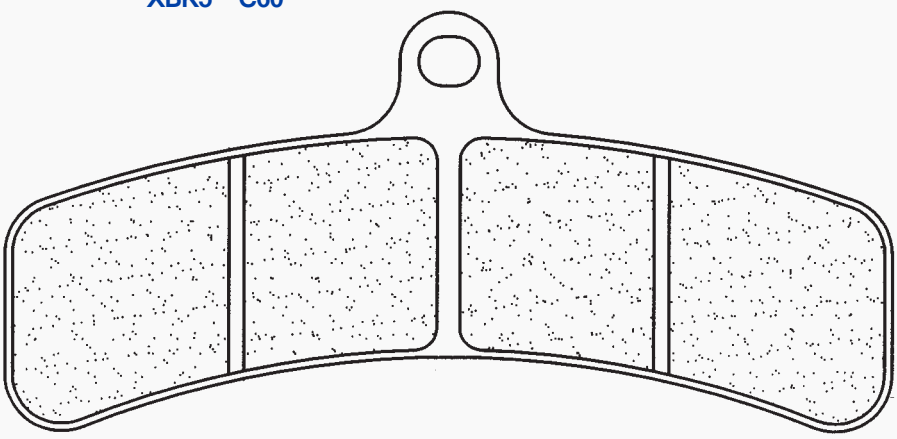

Dim. / Size
117 mm
57.3 mm
8 mm

Street	Sport	Racing	Enduro	MX	Off-road Racing	ATV

XBK5

Dim. / Size
69.5 mm
49.5 mm
8 mm

2920

SPIEGLER		
4 Piston caliper (Road / Racing)	1	●

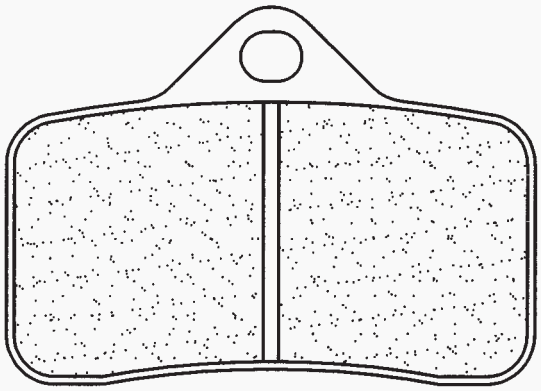

1 - 2 = Nombre de jeux avant / Number of front sets / Anzahl Sets / Numero blister / Numero des juegos
L = Gauche / Left / Links / Sinistra / Izquierda - R = Droite / Right / Rechts / Destra / Derecha

Street	Sport	Racing	Enduro	MX	Off-road Racing	ATV

RX3

2922

Dim. / Size
39.6 mm
43.6 mm
7 mm

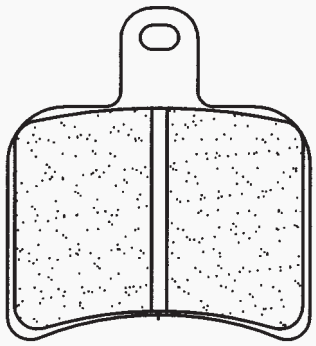

AP RACING			
CP 4226 Rear caliper (Racing)	1		●

Street	Sport	Racing	Enduro	MX	Off-road Racing	ATV
					X59	ATV1

2923

Dim. / Size
62 mm
40.8 mm
9.5 mm

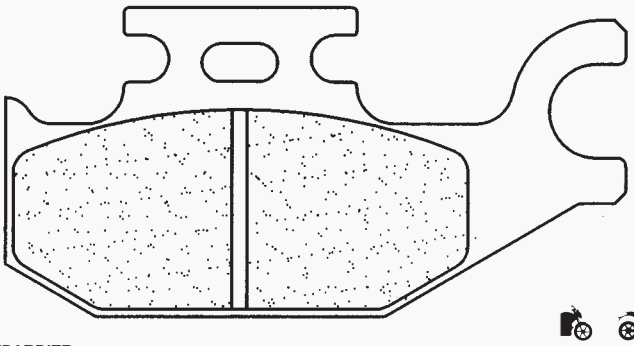

Dim. / Size
82 mm
40.8 mm
9.5 mm

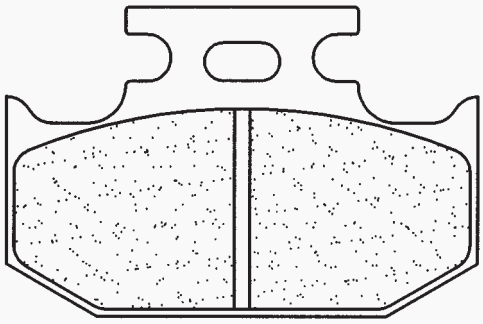

BOMBARDIER						
200	Rally 2x4	05 -				●
330	Outlander	03 -	1	L	●	●
400	Outlander	03 -	1	L	●	●
400	Outlander Max	03 -	1	L	●	●
500	Quest	02 -	1	L	●	●
500	Traxter 4x4	02 -	1	L	●	●
500	Traxter 4x4 Max	02 -	1	L	●	●
650	DS	01 -	1	L	●	●
650	Quest	02 -	1	L	●	●
650	Quest Max	02 -	1	L	●	●
650	Traxter Max	03 -	1	L	●	●
800	Outlander	06 -	1	L	●	●
800	Outlander XT	06 -	1	L	●	●
CAN-AM						
400	Outlander EFI	09 -	1	L	●	
400	Outlander Max STD	07 -	1	L	●	
400	Outlander MAX XT	07 -	1	L	●	
400	Outlander STD	07 -	1	L	●	
400	Outlander XT	07 -	1	L	●	
500	Outlander Max STD	07 -	1	L	●	
500	Outlander MAX XT	07 -	1	L	●	
500	Outlander STD	07 -	1	L	●	
500	Outlander XT	07 -	1	L	●	
500	Renegade	08 -	1	L	●	
650	Outlander Max STD	07 -	1	L	●	
650	Outlander MAX XT	07 -	1	L	●	
650	Outlander STD	07 -	1	L	●	
650	Outlander XT	07 -	1	L	●	

CAN-AM						
800	Outlander Max LTD	07 -	1	L	●	
800	Outlander Max STD	07 -	1	L	●	
800	Outlander MAX XT	07 -	1	L	●	
800	Outlander STD	07 -	1	L	●	
800	Outlander XT	07 -	1	L	●	
800	Renegade	08 -	1	L	●	
800	Renegade Efi	07 -	1	L	●	
800	Renegade X	08 -	1	L	●	
1000	Commander Max	14 -		L		●
1000	Maverick	13 -	1	L	●	●
CANNONDALE						
440	Blaze	03 -	1	L	●	●
440	Cannibal	03 -	1	L	●	●
440	Glamis	03 -	1	L	●	●
440	Moto	03 -	1	L	●	●
440	Speed	03 -	1	L	●	●
YAMAHA						
YFM	400 FAM / FAN Kodiak	00 - 01				●
YFM	400 FAT/FAV (Big Bear)	05 - 06				●
YFM	400 Grizzly FGW/FGX	07 - 08				●
YFM	450 Grizzly EPS	07 -				●
YFM	450 Kodiak FAR/FAS (5ND3/4)	03 - 04				●
YFM	450 Kodiak FAT/FAHT/FAV	05 - 06				●
YFM	450 Wolverine FXV-FXZ	06 -				●

Street	Sport	Racing	Enduro	MX	Off-road Racing	ATV
					X59	ATV1

2924

Dim. / Size
72.7 mm
43.8 mm
7 mm

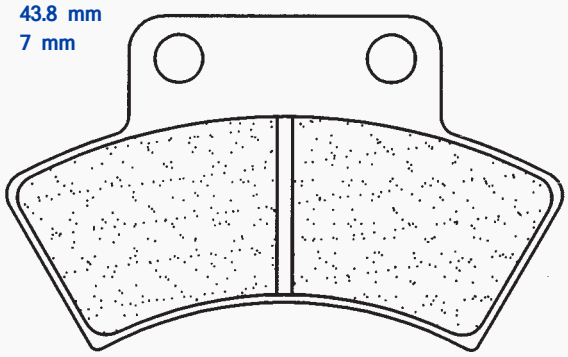

POLARIS		
250	2x4 / 4x4	90 - 93	●
250	Big Boss 4x6	89 - 93	●
250	Trail Blazer	90 - 98	●
250	Trail Boss	91 - 99	●
250	Trail Boss 2x4 / 4x4	88 - 89	●
300	2x4 / 4x4	94 - 95	●
300	Big Boss 6x6	94	●

1 - 2 = Nombre de jeux avant / Number of front sets / Anzahl Sets / Numero blister / Numero des juegos
L = Gauche / Left / Links / Sinistra / Izquierda - R = Droite / Right / Rechts / Destra / Derecha

Street	Sport	Racing	Enduro	MX	Off-road Racing	ATV
					X59	ATV1

2924 suite

POLARIS				
300	Xplorer 4x4	96 - 00		●
300	Xpress L	96 - 97		●
350	Big Boss L	93		●
350	L 2x4 / 4x4	90		●
350	L 4x4	93		●
350	Sportsman 4x4	93		●
350	Trail Boss L 2x4 / 4x4	91 - 93		●
400	Big Boss L	94 - 97		●
400	L 2x4	94 - 95		●
400	L 4x4	94		●
400	Scrambler L 4x4	95 - 97		●
POLARIS				
400	Sport L	94 - 98		●
400	Sportsman L 4x4	94 - 97		●
400	Xplorer L 4x4	95 - 98		●
400	Xpress L	96 - 97		●
425	Magnum 2x4 / 4x4	95 - 98		●
425	Magnum 6x6	96 - 97		●
500	Big Boss 6x6	98 - 99		●
500	Scrambler 4x4	97		●
500	Sportsman 4x4	96 - 97		●
500	Xplorer 4x4	97		●

Street	Sport	Racing	Enduro	MX	Off-road Racing	ATV
						ATV1

2925

Dim. / Size
74.3 mm
52.9 mm
7 mm

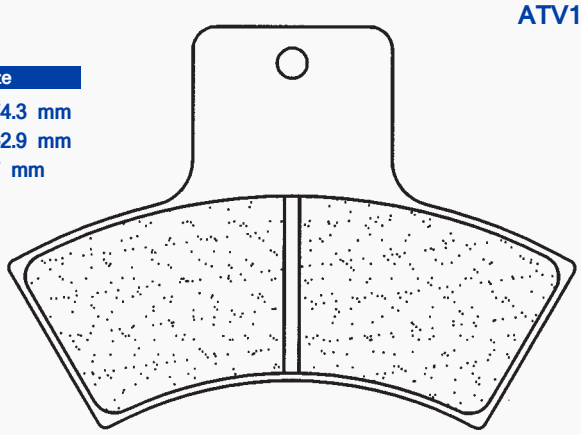

POLARIS				
250	Trail Blazer	99 - 04		●
250	Xplorer 4x4	00 -		●
325	Magnum 2x4 / 4x4	00 - 02		●
325	Trail Boss	00 - 02		●
325	Xpedition	00 - 01		●
330	Trail Boss	03 - 04		●
335	Sportsman 4x4	99 - 00		●
335	Worker 4x4	99 - 00		●
400	Scrambler 2x4 / 4x4	00 - 02		●
400	Scrambler 4x4	98 - 00		●
400	Sportsman	01 - 02		●
400	Xplorer L 2x4 / 4x4	99 - 02		●
425	Xpedition 4x4	00 -		●
455	Diesel	01 -		●
455	Diesel 4x4 EBS	99 - 00		●
500	Magnum 4x4	99 - 01		●
500	Scrambler 2x4	01 - 02		●
500	Scrambler 4x4	98 - 04		●
500	Sportsman 4x4 EBS/RSE	98 - 02		●

Street	Sport	Racing	Enduro	MX	Off-road Racing	ATV
						ATV1

2926

Dim. / Size
67.3 mm
44.6 mm
7.8 mm

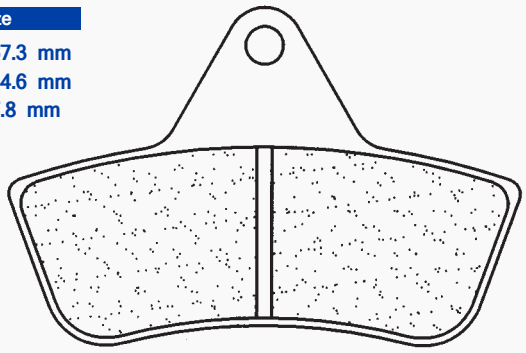

ARCTIC CAT					
250	2x4 / 4x4	99 - 04	2	●	●
300	2x4 / 4x4	98 - 04	2	●	●
375	2x4 / 4x4	02	2	●	●
400	2x4 / 4x4	98 - 04	2	●	●
400	2x4/4x4 (FIS) (Man. Hand Brake)	05 -	2	●	●
400	TBX 4x4	04	2	●	●
454	Artic Cat 4x4	98 -	2	●	●
454	Bear Cat 2x4 / 4x4	96 - 98	2	●	●
500	2x4 / 4x4	98 - 04	2	●	●
500	2x4 / 4x4 (FIS)	02 - 04	2	●	●
500	TBX 4x4	02 - 04	2	●	●
500	TRV 4x4	03 - 04	2	●	●
LAVERDA					
400	Quasar 4x4	04 -	2	●	●
500	Quasar 4x4 / C	04 -	2	●	●

1 - 2 = Nombre de jeux avant / Number of front sets / Anzahl Sets / Numero blister / Numero des juegos
L = Gauche / Left / Links / Sinistra / Izquierda - R = Droite / Right / Rechts / Destra / Derecha

Street	Sport	Racing	Enduro	MX	Off-road Racing	ATV

X59 ATV1

2927

Dim. / Size

96.9 mm
36.7 mm
7 mm

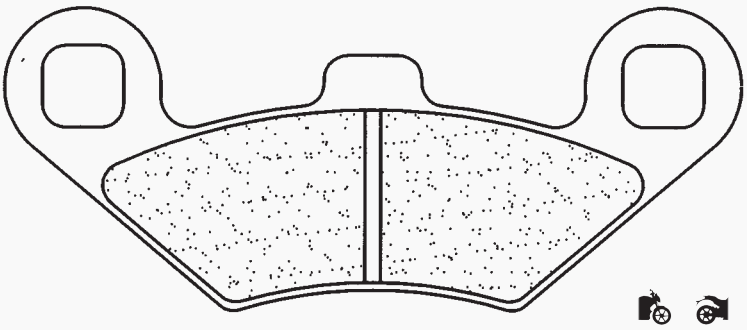

CAN-AM

450	DS	08 -				●

POLARIS

250	2x4 / 4x4	90 - 93	2	●	
250	Big Boss 4x6	89 - 93	2	●	
250	Trail Blazer	99 - 04	2	●	
250	Trail Blazer	05 - 06	2	●	
250	Trail Blazer	90 - 98	2	●	
250	Trail Boss	91 - 99	2	●	
250	Trail Boss 2x4 / 4x4	88 - 89	2	●	
250	Xplorer 4x4	00 -	2	●	
300	2x4 / 4x4	94 - 95	2	●	
300	Big Boss 6x6	94	2	●	
300	Sportsman 4x4	08 -	2	●	●
300	Xplorer 4x4	96 - 00	2	●	
300	Xpress L	96 - 97	2	●	
325	Magnum 2x4 / 4x4	00 - 02	2	●	
325	Trail Boss	00 - 02	2	●	
325	Xpedition	00 - 01	2	●	
325	Xpedition	02 -	2	●	
330	ATP	06 -	2	●	
330	ATP 4x4	04 - 05	2	●	●
330	E Trail Blazer	08 -	2	●	
330	Magnum 2x4 / 4x4	03 - 06	2	●	
330	Trail Boss	03 - 04	2	●	
330	Trail Boss	05 - 10	2	●	
335	Sportsman 4x4	99 - 00	2	●	
335	Worker 4x4	99 - 00	2	●	
350	Big Boss L	93	2	●	
350	L 2x4 / 4x4	90	2	●	
350	L 4x4	93	2	●	
350	Sportsman 4x4	93	2	●	
350	Trail Boss L 2x4 / 4x4	91 - 93	2	●	
400	Big Boss L	94 - 97	2	●	
400	L 2x4	94 - 95	2	●	
400	L 4x4	94	2	●	
400	Scrambler 2x4 / 4x4	00 - 02	2	●	
400	Scrambler 4x4	98 - 00	2	●	
400	Scrambler L 4x4	95 - 97	2	●	
400	Sport L	94 - 98	2	●	
400	Sportsman	01 - 02	2	●	
400	Sportsman L 4x4	94 - 97	2	●	
400	Xplorer L 2x4 / 4x4	99 - 02	2	●	
400	Xplorer L 4x4	95 - 98	2	●	
400	Xpress L	96 - 97	2	●	
425	Magnum 2x4 / 4x4	95 - 98	2	●	
425	Magnum 6x6	96 - 97	2	●	
425	Xpedition 4x4	00 -	2	●	

POLARIS

450	Outlaw MXR	09 - 10			●
450	Outlaw S	08			●
450	Sportsman	06 -	2	●	
455	Diesel	01 -	2	●	
455	Diesel 4x4 EBS	99 - 00	2	●	
500	ATP HO	04 - 05	2	●	●
500	Big Boss 6x6	98 - 99	2	●	
500	E Scrambler 2x4 / 4x4	08 -	2	●	
500	Magnum 2X4 / 4x4 HDS	02 - 03	2	●	
500	Magnum 4x4	99 - 01	2	●	
500	Outlaw	06 - 07	2	●	●
500	Predator	03 - 05	2	●	●
500	Predator E	06 -	2	●	
500	Ranger 6x6	00 - 02	2	●	
500	Revolver	06 -	2	●	●
500	Scrambler 2x4	01 - 02	2	●	
500	Scrambler 2x4	07 - 08	2	●	
500	Scrambler 4x4	97	2	●	
500	Scrambler 4x4	98 - 04	2	●	
500	Scrambler 4x4	05 - 10	2	●	
500	Sportsman 4x4	96 - 97	2	●	
500	Sportsman 4x4 EBS/RSE	98 - 02	2	●	
500	Sportsman 6x6	00 - 08	2	●	
500	Sportsman Efi / HO	03 - 08	2	●	
500	Sportsman Efi Quad	08 - 10	2	●	
500	Sportsman Touring	08 - 10	2	●	●
500	Sportsman X2	06 - 08	2	●	
500	Sportsman X2 Efi	07 - 09	2	●	●
500	Xplorer 4x4	97	2	●	
525	Outlaw IRS	08 - 10			●
525	Outlaw S	08 - 10			●
570	RZR	12 -			●
570	Sportsman Efi EPS	11 - 13	2	●	
570	Sportsman Touring Efi	14 -	2	●	
600	Sportsman 4x4	03 - 05	2	●	
700	Sportsman 4x4	02 - 06	2	●	
700	Sportsman Efi	07 -	2	●	
700	Sportsman MV 700	05 - 06	2	●	
700	Sportsman X2	08 -	2	●	●
800	RZR	08 -	2		●
800	Sportsman Efi	05 - 07	2	●	
800	Sportsman Efi	10 - 13	2	●	
800	Sportsman Efi 6x6 Big Boss	09 - 10	2	●	●
800	Sportsman Efi Int/HO	07 - 10	2	●	
800	Sportsman Touring / Efi	08 - 09	2	●	●
800	Sportsman X2 Efi	07 - 09	2	●	●

Street	Sport	Racing	Enduro	MX	Off-road Racing	ATV

XBK5 C60

2950

AP RACING

CP 2868 caliper (Road / Racing)	1	●

Dim. / Size

59.2 mm
57.4 mm
10.3 mm

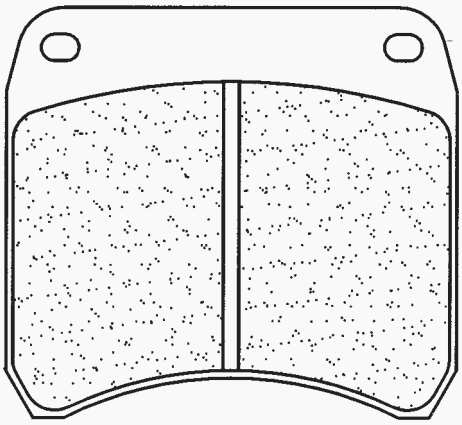

Dessins / Drawings / Zeichnungen / Disegni / Dibujos

1 - 2 = Nombre de jeux avant / Number of front sets / Anzahl Sets / Numero blister / Numero des juegos
L = Gauche / Left / Links / Sinistra / Izquierda - R = Droite / Right / Rechts / Destra / Derecha

Street	Sport	Racing	Enduro	MX	Off-road Racing	ATV

A3+ RX3

2958

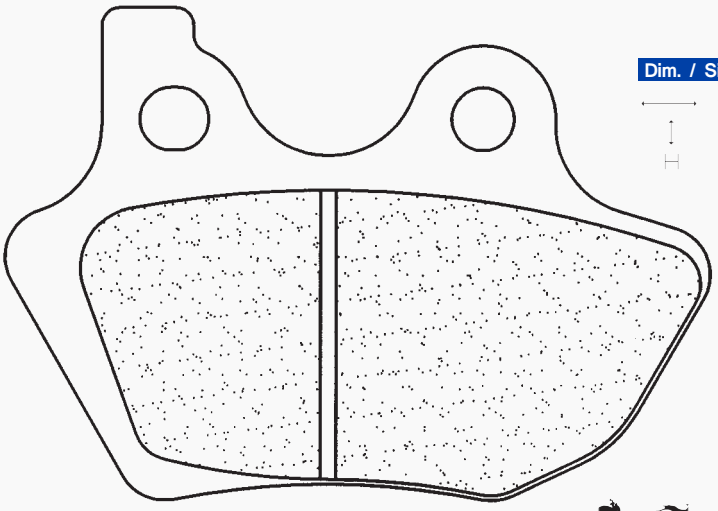

Dim. / Size

93.2 mm
65.1 mm
7.5 mm

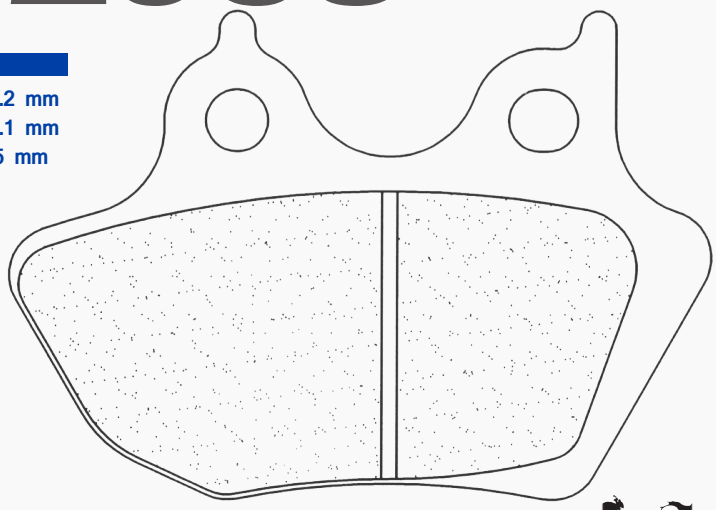

HARLEY DAVIDSON

XL	883 Sportster 53c Custom	00 - 03	1	●	●
XL	883 Sportster Hugger	00 - 03	1	●	●
XL	883 Sportster Standard	00 - 03	1	●	●
XLH	883 Sportster	00 - 03	1	●	●
XLH	883 Sportster R "Flat Track"	00 - 03	1	●	●
VRSCA	1130 V-Rod	02 - 05	2	●	●
VRSCB	1130 V-Rod	04 - 05	2	●	●
XL	1200 Sportster C Custom	00 - 03	1	●	●
XL	1200 Sportster S Sport	00 - 03	2	●	●
XLH	1200 Sportster	00 - 03	1	●	●
FLHR/FLHRI	1450 Road King	00 - 04	2	●	●
FLHRC/FLHRCI	1450 Road King Classic	00 - 04	2	●	●
FLHRS/FLHRSI	1450 Road King Custom	04 - 06	2	●	●
FLHT/FLHTI	1450 Electra Glide Standard	00 - 06	2	●	●
FLHTC/FLHTCI	1450 Electra Glide Classic	00 - 06	2	●	●
FLHTCUI	1450 Electra Glide Ultra Classic	00 - 06	2	●	●
FLHXI	1450 Street Glide	06 -	2	●	●
FLSTC/FLSTCI	1450 Heritage Classic	00 - 04	1	●	●
FLSTC/FLSTCI	1450 Softail	05 - 06	1	●	●
FLSTF/FLSTFI	1450 Fat Boy	00 - 06	1	●	●
FLSTI	1450 Heritage Softail	06 -	1	●	
FLSTN/FLSTNI	1450 Softail Deluxe	05 - 06	1	●	●
FLSTS	1450 Heritage Springer	00 - 03			●
FLSTSC/FLSTSCI	1450 Springer Classic	05 -			●
FLTR/FLTRI	1450 Road Glide Classic	00 - 06	2	●	●
FXD	1450 Dyna Super Glide	00 - 03	1	●	●
FXDBI	1450 Dyna Street Bob	06	1	●	●
FXDC/FXDCI	1450 Dyna Super Glide Custom	05 - 06	1	●	●
FXDI	1450 35th Anniversary Super Glide	06 -	1	●	
FXDI	1450 Dyna Super Glide	04 - 06	1	●	●
FXDL	1450 Dyna Low Rider	00 - 03	2	●	●
FXDLI	1450 Dyna Low Rider	04 - 06	1	●	●
FXDS-CON	1450 Dyna Convertible	00 - 02	2	●	●
FXDWG	1450 Dyna Wide Glide	00 - 03	2	●	●
FXDWGI	1450 Dyna Wide Glide	04 - 06	1	●	●

HARLEY DAVIDSON

FXDX	1450 Dyna Super Glide Sport	00 - 03	2	●	●
FXDXI	1450 Dyna Super Glide Sport	04 - 06	2	●	●
FXDXT	1450 Dyna Super Glide T-Sport	00 - 03	2	●	●
FXST/FXSTI	1450 Softail Standard	00 - 04	1	●	●
FXSTB/FXSTBI	1450 Night Train	00 - 04	1	●	●
FXSTBI	1450 Night Train	06 -	1	●	
FXSTD/FXSTDI	1450 Softail Deuce	00 - 04	1	●	●
FXSTDI	1450 Softail Deuce	05 - 06	1	●	
FXSTI	1450 Softail Standard	05 - 06	1	●	
FXSTS/FXSTSI	1450 Softail Springer	00 - 04			●
FXSTS/FXSTSI	1450 Softail Springer	05 -			●
FXSTSI	1450 Softail	06 -	1	●	
FLHR	1584 Road King	07 -	2	●	
FLHRC	1584 Road King Classic	07 -	2	●	
FLHRS	1584 Road King Custom	07 -	2	●	
FLHT	1584 Electra Glide Standard	07 -	2	●	
FLHTC	1584 Electra Glide Classic	07 -	2	●	
FLHTCU	1584 Ultra Classic Electra Glide	07 -	2	●	
FLHX	1584 Street Glide	07 -	2	●	
FLSTC	1584 Heritage Softail Classic	07 - 08	1	●	
FLSTF	1584 Fat Boy	07 -	1	●	
FLSTF	1584 Fat Boy	07 -	1	●	
FLSTN	1584 Softail Deluxe	07 -	1	●	
FLSTN	1584 Softail Deluxe	07 -	1	●	
FLSTSCI	1584 Softail	07 -	1	●	
FXD	1584 Dyna Super Glide	07 -	1	●	
FXDB	1584 Dyna Street Bob	07	1	●	
FXDC	1584 Dyna Super Glide Custom	07 -	1	●	
FXDL	1584 Dyna Low Rider	07 -	1	●	
FXDWG	1584 Dyna Wide Glide	07 -	1	●	
FXST	1584 Softail Standard	07 -	1	●	
FXSTB	1584 Night Train	07 -	1	●	
FXSTC	1584 Softail Custom	07 -	1	●	
FXSTD	1584 Softail Deuce	07 -	1	●	

Street	Sport	Racing	Enduro	MX	Off-road Racing	ATV

A3+

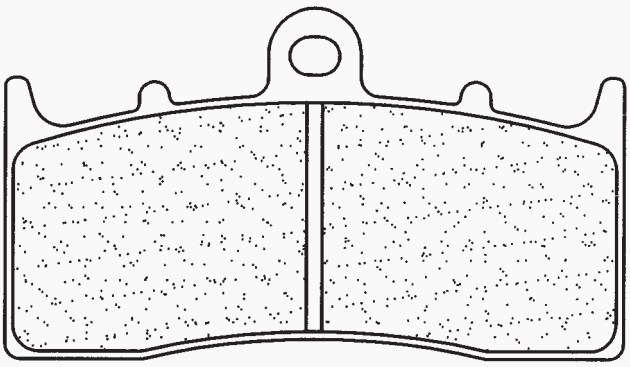

2960

Dim. / Size

81.2 mm
46 mm
8.9 mm

BMW

R	850 R	03 -	2	●	
R	1100 S ABS (Tokico)	01 -	2	●	
R	1150 R	01 -	2	●	
R	1150 R Rockster	03 -	2	●	
R	1150 RS	01 -	2	●	
K	1200 LT	00 - 09	2	●	
K	1200 R	05 -	2	●	
K	1200 R Sport	07 -	2	●	
R	1200 CL	03 -	2	●	
R	1200 R	06 - 14	2	●	
K	1300 R	09 -	2	●	
K	1600 GT / GTL	11 -	2	●	
K	1600 B	17 -	2	●	

1 - 2 = Nombre de jeux avant / Number of front sets / Anzahl Sets / Numero blister / Numero des juegos
L = Gauche / Left / Links / Sinistra / Izquierda - R = Droite / Right / Rechts / Destra / Derecha

Street	Sport	Racing	Enduro	MX	Off-road Racing	ATV

A3+

2961

Dim. / Size

69.8 mm
55.1 mm
7 mm

SUZUKI				
RF	900 RR / RS / RS2	94 - 95	2	●
RF	900 RT / RV / RW	96 - 99	2	●

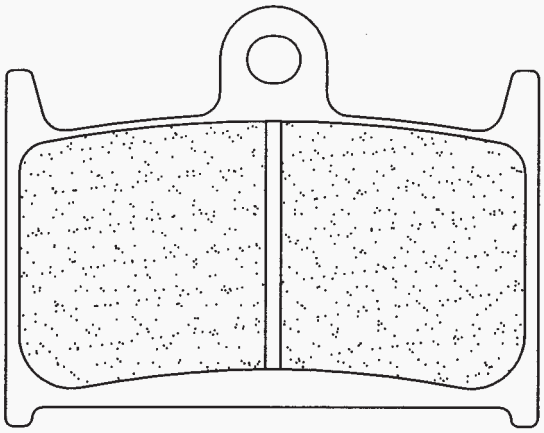

Street	Sport	Racing	Enduro	MX	Off-road Racing	ATV

RX3

2984

Dim. / Size

49.7 mm
36 mm
8 mm

DUCATI			
	999 RS	04 -	●

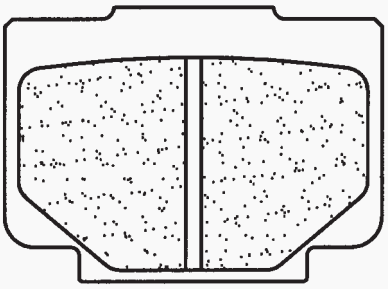

Street	Sport	Racing	Enduro	MX	Off-road Racing	ATV

RX3

2987

Dim. / Size

75 mm
55.5 mm
8.5 mm

BMW			
R	1200 CL	03 -	●
K	1200 LT	97 - 00	●
K	1200 LT	00 - 09	●

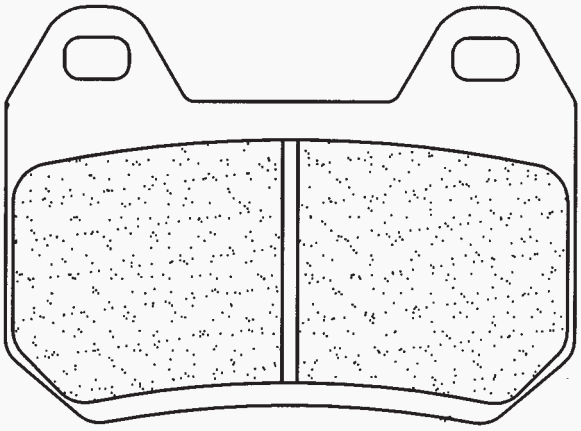

1 - 2 = Nombre de jeux avant / Number of front sets / Anzahl Sets / Numero blister / Numero des juegos
L = Gauche / Left / Links / Sinistra / Izquierda - R = Droite / Right / Rechts / Destra / Derecha

Street | Sport | Racing | Enduro | MX | Off-road Racing | ATV

SC

Dim. / Size
39.7 mm
50 mm
7 mm

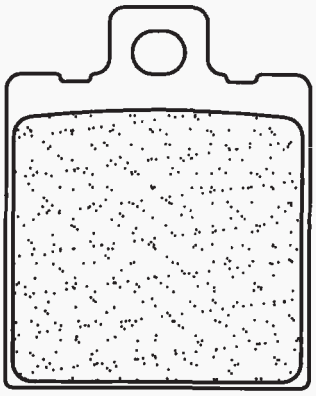

3001

APRILIA					
	50	RS	93 - 95	1	● ●
	50	RS	96 - 99	1	●
BETA					
	50	Chrono 502	97 -	1	●
	50	Quadra	97 -	1	●
	50	Tempo	97 - 98	1	●
CAGIVA					
	50	Cucciolo	97 -	1	●
	50	Nuvola	00 -	1	●

Scooter | Maxi-scooter

MSC

3003

Dim. / Size
102 mm
40 mm
8.1 mm

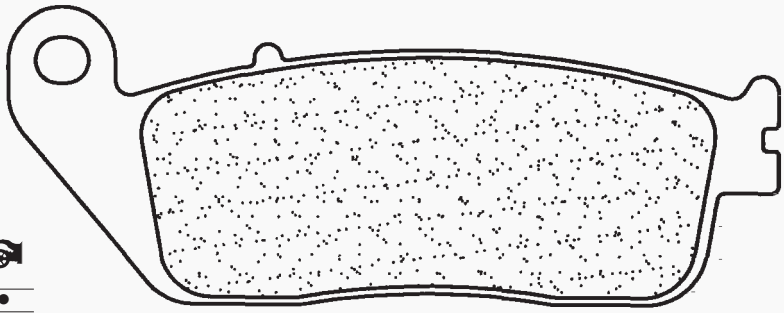

BMW					
C	600	Sport	12 -	2	● ●
C	650	GT	12 -	2	● ●
HONDA					
CN	250	Helix (Fusion)	93 -	1	●
KAWASAKI					
J	300		14 -	1	●
J	125		16 -	1	●
KYMCO					
	125	Dink Street	09 -	1	●
	125	Downtown i	10 -	1	●
	200	Downtown i	10 -	1	●
	250	Xciting	04 - 05	1	● ●
	250	Xciting	06 -	1	●
	300	Gdink	12 -	1	●
	400	Xciting / i	12 - 16		●
	400	Xciting i ABS	16		●
	400	Maxsym	11 - 16		●

KYMCO					
	300	Downtown i ABS	10 -	1	●
	300	People Gti	10 -	1	●
	300	Xciting Ri	08 -	2	●
	500	Xciting	04 -	2	● ●
	500	Xciting R ABS	09 -	2	● ●
	700	MyRoad	09 -	2	● ●
PEUGEOT					
	300	Geopolis 300 GT	14 -	2	●
SACHS					
	400	Quattrocento	08	2	●

Scooter | Maxi-scooter

SC

3004

Dim. / Size
31.6 mm
52 mm
5.5 mm

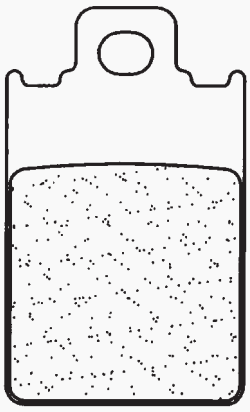

APRILIA					
AF-1	50	AE	86 -	1	●
AF-1	50	Europa / Futura	90 -	1	●
	50	Red Rose	90 -	1	●
	50	Tuareg	86 -	1	●
	50	Tuareg Rally	90 -	1	●
BENELLI					
	50	Chrono	92 - 93	1	●
FANTIC					
	50	Fast		1	●
	50	Oasis	90 -	1	●
KTM					
	50	GO	94 -	1	●
MALAGUTI					
	50	Centro	93 -	1	●
F-12	50	Phantom (Liquid Cooled)	94 - 98	1	●
F-15	50	Fire Fox (Liquid Cooled)	96 - 99	1	●
MBK					
	50	X-Limit	98 - 03	1	●
YAMAHA					
DT	50	R	98 - 03	1	●

1 - 2 = Nombre de jeux avant / Number of front sets / Anzahl Sets / Numero blister / Numero des juegos
L = Gauche / Left / Links / Sinistra / Izquierda - R = Droite / Right / Rechts / Destra / Derecha

Street	Sport	Racing	Enduro	MX	Off-road Racing	ATV
SC	MSC					

3006

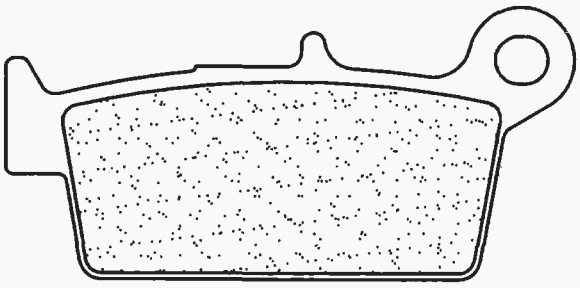

Dim. / Size

75 mm
36.1 mm
8.5 mm

HONDA					
SRX	50	Shadow	98 -	1	●
	75	Yupy	90 -	1	●
SRX	90	Shadow	98 -	1	●
KYMCO					
	50	Cobra Cross	01 -	1	●
	50	Cobra Exclusive	01 -	1	●
	50	Cobra Racer	01 -	1	●
	50	Easy	01 -	1	●
	50	Filly LX	01	1	●
	50	Heroism	95 - 96	1	●
	50	Scout	95 -	1	●
	50	Super 9	00 - 01	1	●
	50	Top Boy On/Off Road	96 -	1	●
	50	Top Boy Racer / Cross	01 -	1	●
	50	Yup	01	1	●
CX	50	Curio Super	94 -	1	●
DD	50	Sniper	94 -	1	●
K12	50		95 -	1	●
KB	50		95 -	1	●
ZX	50	Fever	96 -	1	●
ZX	50	Super Fever	02 -	1	●
KB	100		99 -	1	●
	100	Top Boy On/Off Road	99 -	1	●
	150	Freeway	95 -	1	●
PEUGEOT					
SV	50	Geo	91-	1	●
SV	50	L	93 -	1	●
SV	80	Geo	91 -	1	●
SV	100		91 -	1	●
SV	125	Geo	91 - 92	1	●
SV	125	Geo / L Executive	93 -	1	●
SYM					
SR	100	Sunrise	97 -	1	●

Scooter	Maxi-scooter
SC	MSC

3008

Dim. / Size

71 mm
36.2 mm
9 mm

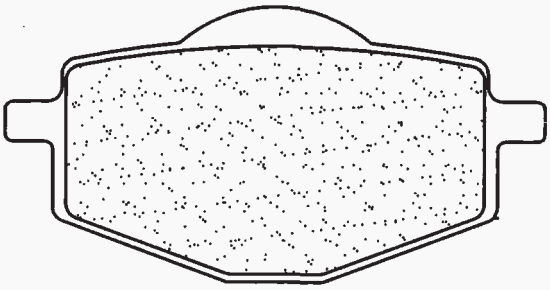

MALAGUTI					
	125	Centro ie	08 -		●
	160	Centro ie	08 -		●
MBK					
	50	X-Power	98 - 03		●
	100	Booster	01 -	1	●
	125	Flame R / F	96 - 03	1	●
SACHS					
	50	Bee	08 - 10	1	●
	125	Bee	08 - 09	1	●
YAMAHA					
DT	50	R	89 - 97	1	●
TZM	50	R	94 -		●
TZR	50		90 - 92		●
TZR	50		93 - 02		●
XC	150	Fly One R	98 -	1	●

Scooter	Maxi-scooter
SC	MSC

3009

Dim. / Size

51.8 mm
36.6 mm
8 mm

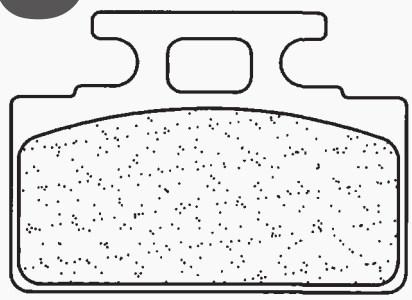

HONDA					
NH	50	Lead	86 - 93	1	●
NH	80	Lead Scooter	86 -	1	●
R	80	Lead	88 -	1	●
R	125	Lead	88 -	1	●
KYMCO					
	50	Manboy	95 -	1	●
	50	Zap	95 -	1	●
SP	90	Yup	95 -	1	●
SYM					
	50	Cinderella	99 -	1	●
	50	Mio	05 -	1	●
DD	50		02 -	1	●
	100	Cinderella	01 -	1	●
	100	Mio	05 -	1	●

1 - 2 = Nombre de jeux avant / Number of front sets / Anzahl Sets / Numero blister / Numero des juegos
L = Gauche / Left / Links / Sinistra / Izquierda - R = Droite / Right / Rechts / Destra / Derecha

Scooter Maxi-scooter

MSC

3011

Dim. / Size
90 mm
49 mm
11 mm

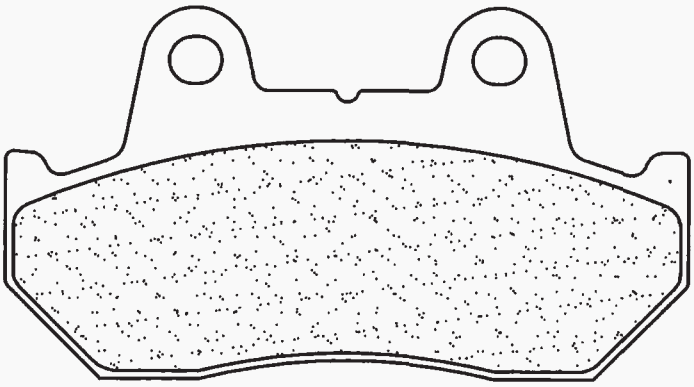

HONDA						
CN	250	Helix	86 - 87	1	●	
SYM						
	110	Bullet	93	1	●	
	125	Aero Wolf	05	1	●	

Scooter Maxi-scooter

SC

3012

Dim. / Size
85 mm
42.5 mm
8 mm

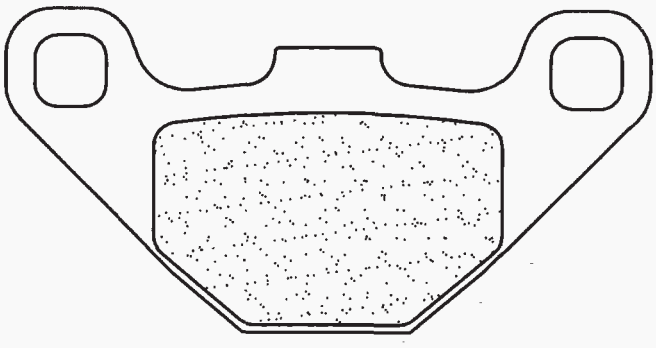

FANTIC						
	50	Big Wheel	94 -			●
	50	Grinta	95 -			●
	50	Leader	95 -			●
RIEJU						
RS2	50	FR	09 - 10			●
	50	NKD	08 - 10			●
MRT	50	Supermotard (Radial caliper / Cast wheel)	09 - 10			●
	50	Tango Motard	09 - 10	1	●	
SHERCO						
	50	SU (2T) Urban Base (Cast wheel model)	10 -	1	●	
SUZUKI						
TV	50	Wolf	89 -	1	●	

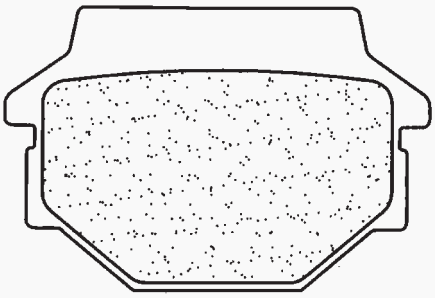

Dim. / Size
56 mm
37.1 mm
10 mm

Scooter Maxi-scooter

SC MSC

3013

Dim. / Size
39.7 mm
49.5 mm
6 mm

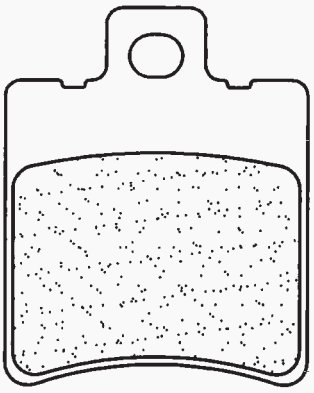

APRILIA						
	50	Amico (All models)	92 -	1	●	
	50	Area 51	98 -	1	●	●
	50	Business	97 -	1	●	
	50	Classic	96 -	1	●	
	50	Club	97 -	1	●	
	50	Gulliver / Liquid	95 -	1	●	
	50	Habana	01 -	1	●	
	50	Mc Gulliver	00 -	1	●	
	50	Mojito / Mojito Custom	02 -	1	●	
	50	Netscaper	97 -	1	●	
	50	Racing	98 -	1	●	●
	50	Rally	95 -	1	●	
	50	Rally Liquid	96 -	1	●	
	50	Scarabeo	94 - 99	1	●	
	50	Scarabeo Ditech	02 -	1	●	
	50	Scarabeo Street	00 -	1	●	
	50	Sonic	99 -	1	●	
	50	SR / SR Liquid	93 -	1	●	
	50	SR Ditech / Racing	00 -	1	●	
	50	SR Replica (Liquid Cooled)	96 -	1	●	
	50	SR Stealth	97 -	1	●	●
	50	SR Street	05 -	1	●	
	50	SR Urban Kid	93 -	1	●	
	50	SR Viper	93 -	1	●	
	50	SR WWW	97 -	1	●	
	50	Younger	97 -	1	●	
	125	Leonardo	97 - 98	1	●	●
	125	Leonardo	96	1	●	
	150	Leonardo	97 - 98	1	●	●
ATALA						
	25	Carosello	97 -	1	●	
AT10	50	Byte	97 -	1	●	
	50	Carosello	97 -	1	●	
	50	Hacker	95 -	1	●	

1 - 2 = Nombre de jeux avant / Number of front sets / Anzahl Sets / Numero blister / Numero des juegos
L = Gauche / Left / Links / Sinistra / Izquierda - R = Droite / Right / Rechts / Destra / Derecha

Scooter	Maxi-scooter
SC	MSC

3013 suite

ATALA						
	50	Skeggia	98 -	1	●	
	125	Hacker	98 -	1	●	
BENELLI						
	50	491	98 -	1	●	
	50	491 RR / Superbike	99-	1	●	●
	50	491 ST	01 -	1	●	
K2	50	Air / LC / Namur	99 -	1	●	●
	50	Chrono	94 -	1	●	
	50	Naked	02 -	1	●	
	50	Nemo / Quadra	94 -	1	●	
	50	Pepe	99 -	1	●	
K2	100	Biposto	99 -	1	●	
	100	Naked	02 -	1	●	
LX	100	Pepe	02 -	1	●	
	125	Adiva	00 -	1	●	
	125	Velvet / Velvet Touring	99 -	1	●	●
	150	Adiva	00 -	1	●	
	150	Velvet / Velvet Touing	00 -	1	●	●
	250	Velvet / Velvet Touring	99 -	1	●	●
	400	Velvet Dusk	03 -			●
BETA						
	50	Ark	96 -	1	●	●
	50	Ark LC Serie K	98 -	1	●	●
	50	Chrono 13	94 -	1	●	
	50	Eikon	04 -	1	●	
	50	Quadra	94 - 96	1	●	
	50	RK-6	96 -	1	●	●
	50	Tempo	99 -	1	●	
	125	Eikon	04 -	1	●	
	150	Eikon	04 -	1	●	
CAGIVA						
	125	Cucciolo	00 -	1	●	
	125	Nuvola	00 -	1	●	
CPI						
	50	GTR	03 -			●
	125	GTR / GTS	02 -			●
	200	GTR / GTS	02 -			●
DERBI						
	50	Vamos R (Brembo)	95 -	1	●	
GARELLI						
	50	Flo	00 -	1	●	
	125	Panther	02 -			●
	150	Panther	02 -			●
	250	Panther	02 -			●
	400	Skynet	02 -			●
GENERIC						
	50	Toxic	07 -			●
	50	Trigger SM	06 -			●
	50	Trigger SM Competition	08 -			●
	50	Trigger X	06 -			●
	50	Trigger X Competition	08 -			●
GILERA						
	50	Eaglet	97 -	1	●	
	50	Ice	02 -	1	●	
	50	Runner	98 - 05	1	●	
	50	Runner	97	1	●	
	50	Runner SP	01 - 05	1	●	
	50	Stalker	97 -	1	●	
	50	Storm	94 -	1	●	
	50	Typhoon	93 - 95	1	●	
NRG	50		94 -	1	●	
	70	Runner Malossi	98-	1	●	●
	80	Typhoon	95 -	1	●	
	175	Mad Mud	02 -			●
	200	Stalker	97 -	1	●	
HERCULES						
	50	Gipsy / Splinter / Reggae	95 -	1	●	
HONDA						
	50	Formula	94 -	1	●	
SGX	50	Sky	97 - 03	1	●	
	50	Sky Classic	00 -	1	●	
	50	Sky Vetro	00 -	1	●	
SFX	50	Sport	95 - 04	1	●	
SH	50	T / Fifty / Scoopy	97 - 03	1	●	
SZX	50	X8R-S / X8R-X	98 -	1	●	
SXR	50		98 -	1	●	
HYOSUNG						
	125	Boomer	03 -	1	●	

HYOSUNG						
GPS	125	D	00 -	1	●	
	125	Exceed	02 -	1	●	
	125	Grand Prix	98 -	1	●	
	125	Hyper	99 -	1	●	
	150	Exceed	02 -	1	●	
	150	Grand Prix	98 -	1	●	
ITALJET						
	50	Formula	94 -	1	●	●
	80	Formula	94 -	1	●	●
KEEWAY						
	125	Arn	06 -	1	●	
	150	Arn	06 -	1	●	
KTM						
	50	Comet PL / TS / RLW / RS	86 - 91	1	●	
MACAL						
	50	Flash	99 -	1	●	
MALAGUTI						
		Ciak (Electric)	00 - 05	1	●	
EL	50	Crosser	97 -	1	●	
F-10	50	Jet-Line	94 -	1	●	
F-10	50	Timemachine	03 -	1	●	
F-10	50	WAP	02 -	1	●	
F-12	50	Phantom (Air Cooled)	99 -	1	●	
F-12	50	Phantom (Liquid Cooled)	99 -	1	●	●
F-12	50	Phantom Digit	02 -	1	●	●
F-12	50	Racing Life LC / Tyre Track	03 -	1	●	●
F-15	50	Fire Fox	01 -	1	●	
F-15	50	Fire Fox LC	01 -	1	●	●
F-15	50	Mechatronic	03 -	1	●	●
	50	Centro SL	98 -	1	●	
	50	Ciak	00 -	1	●	
	50	Ciak Twin Disk	02 -	1	●	●
	50	Yesterday	97 -	1	●	
F-12	100	Phantom	00 -	1	●	
F-12	100	Phantom Twin Disk	02 -	1	●	●
	100	Ciak	00 -	1	●	●
	125	Ciak / Ciak Master	01 - 08	1	●	
	125	F-18	00 -	1	●	
	150	Ciak / Ciak Master	01 - 08	1	●	
	150	F-18	00 -	1	●	●
MBK						
	50	Booster 12"	03 -	1	●	
	50	Booster Naked	04 -	1	●	
	50	Booster NG	95 -	1	●	
	50	Booster Road	94 - 95	1	●	
	50	Booster Rocket	96 -	1	●	
	50	Booster Spirit	96 -	1	●	
	50	Booster Track	96 -	1	●	
	50	Equalis	95 -	1	●	
	50	Evolis	92 -	1	●	
	50	Fizz	94 -	1	●	
	50	Flipper	98 -	1	●	
	50	Forte	94 - 95	1	●	
	50	Mach G	03 -	1	●	
	50	Nitro	97 -	1	●	
	50	Ovetto	97 -	1	●	
	50	Ovetto (4T)	09 -	1	●	
	80	Evolis	94 -	1	●	
	100	Nitro	01 -	1	●	
	100	Ovetto	01 -	1	●	
	125	Doodo	00 - 05	1	●	
	150	Doodo	00 - 05	1	●	
MOTRON						
	50	Spike	97-	1	●	
	50	Sting	95 -	1	●	
	50	Syncro	97 -	1	●	
	50	Thunder	95 -	1	●	
PEUGEOT						
	50	Buxy (Brembo caliper)	94 - 97	1	●	
	50	Speedake (Brembo caliper)	94 - 97	1	●	
	50	Speedfight LC (Brembo caliper)	96 - 00	1	●	
	50	Zenith (Grimeca caliper)	96 -	1	●	
	50	Zenith Luxe	94 -	1	●	
	100	Speedfight LCA (Brembo caliper)	97 -	1	●	
	125	Tweet	10 -			●
	125	Tweet RS	10 -			●
	150	Tweet	10 -			●

1 - 2 = Nombre de jeux avant / Number of front sets / Anzahl Sets / Numero blister / Numero des juegos
L = Gauche / Left / Links / Sinistra / Izquierda - R = Droite / Right / Rechts / Destra / Derecha

Scooter	Maxi-scooter
SC	MSC

3013 suite

PGO						
	50	G-max Doppler	06 -	1	●	
	50	Rodoshow	01 -	1	●	
	90	Rodoshow	02 -	1	●	
PIAGGIO						
LXV	50		08 -	1	●	
NRG	50	Extreme	01 -	1	●	
NRG	50	MC 2	98 - 02	1	●	
NRG	50	MC 2	96 - 97	1	●	
NRG	50	MC 3 DD / DT	02 -	1	●	●
NRG	50	Power DD	05	1	●	●
NRG	50	Power DD	06 -			●
NRG	50	Purejet	05	1	●	●
NRG	50	Purejet	06 -			●
NRG	50	Silver Bullett	10			●
NRG	50		96 - 00	1	●	
NRG.1	50		94 - 95	1	●	
TPH	50		93 - 95	1	●	
	50	Free	97 -	1	●	
	50	NTT	95	1	●	
	50	Storm	94 - 95	1	●	
	50	Typhoon	93 - 95	1	●	
	50	Typhoon Catalysed	02 -	1	●	●
	50	Zip & Zip	94 -	1	●	
	50	Zip Fast Rider	93 - 95	1	●	
	100	Free	02 -	1	●	
LXV	125		08 -	1	●	
SKR	125		94 -	1	●	
	125	Hexagon	94 - 95	1	●	
	125	Typhoon Catalysed	02 -	1	●	●
LX	150		08 -	1	●	
	150	Hexagon	94 - 95	1	●	
QUADRO						
3D	350	S	11 -	2	●	
SHE-LUNG						
	50	Racer	96 -	1	●	

SIAM						
	50	Falcon	97 -	1	●	
	50	Scross	97 -	1	●	
SIMSON						
	50	Habict CX	01 -	1	●	
	50	Spatz	99 -	1	●	
	50	Sperber	99 -	1	●	
	50	Star	99 -	1	●	
	125	Schikra	99 -			●
SUZUKI						
AP	50	R / S / T / V / W	96 - 02	1	●	
AY	50	V/WV/WW/WRW/K1-K4 Katana	97 - 04	1	●	
AY	50	WRK2-WRK4 Katana (Grimeca caliper)	99 - 04	1	●	
UX	50	W Zillion	99 - 02	1	●	
YAMAHA						
BW'S	50	Bump	97 -	1	●	
BW'S	50	Spy	95 -	1	●	
BW'S	50	Next Generation	99 - 07	1	●	
BW'S	50	Original	96 -	1	●	
BW'S	50	R	94 - 95	1	●	
CS	50	JOG-R	02 - 05	1	●	
CS	50	JOG-R	06 - 09	1	●	
CS	50	Z (JOG-RR)	03 - 05	1	●	
CS	50	Z (JOG-RR)	06 - 10	1	●	
YA	50	R Axis	95 - 96	1	●	
YE	50	Zest	92 - 95	1	●	
YH	50	Why	98 - 09	1	●	
YM	50	Breeze	94 - 95	1	●	
YN	50	Neo's (2T)	97 - 09	1	●	
YN	50	Neo's (4T)	09 -	1	●	
YQ	50	Aerox / Aerox R	97 -	1	●	
YE	80	Zest	93 -	1	●	
YN	100	Neo's	99 - 03	1	●	
YQ	100	Aerox	00 - 04	1	●	
XN	125	Teos	00 - 03	1	●	
XN	150	Teos	02 -	1	●	

Scooter	Maxi-scooter
SC	MSC

3014

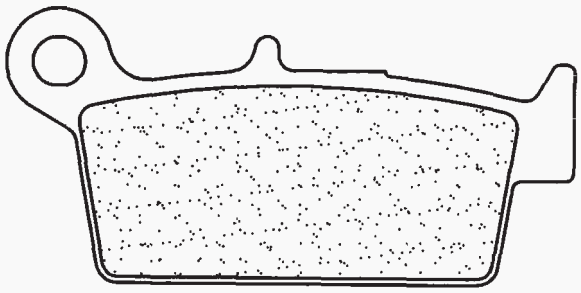

Dim. / Size
75 mm
36.1 mm
9.5 mm

DAELIM						
	50	Besbi	07 -	1	●	
HONDA						
NH	50	Lead	94 -	1	●	
NH	90	Yupy	90 - 94	1	●	
ITALJET						
	125	Amarcord	08 -	1	●	
KYMCO						
	50	Cobra Cross	99 - 00	1	●	
	50	Cobra Racer	99 - 00	1	●	
	50	ZX12	06 -	1	●	
	90	Man Boy	96 -	1	●	
	125	Super 9	00 -	1	●	
	250	Super 9	00 -	1	●	

1 - 2 = Nombre de jeux avant / Number of front sets / Anzahl Sets / Numero blister / Numero des juegos
L = Gauche / Left / Links / Sinistra / Izquierda - R = Droite / Right / Rechts / Destra / Derecha

Scooter Maxi-scooter

SC MSC

3015

Dim. / Size

36 mm
45.5 mm
6 mm

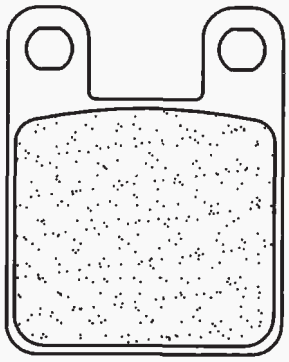

APRILIA						
	50	RS	06 -			●
	50	RX	06 -			●
BARIGO						
		Scooter Electric	97 -	1	●	
BETA						
	50	Eikon	99 - 03	1	●	●
RR	50	Enduro	99 -			●
RR	50	Enduro Alu	04 - 07			●
RR	50	Motard Alu	04 -			●
RR	50	Pro Race	98 -			●
RR	50	Standard	99 -			●
RR	50	Supermotard	04 - 07	1	●	●
RR	50	Supermotard	99 - 03			●
	50	Techno	96 -	1	●	●
	50	Tempo	92 - 96	1	●	
	125	Eikon	99 - 03	1	●	●
	150	Eikon	99 - 03	1	●	●
	250	Eikon	99 -	1	●	●
BUTALCO						
	50	Astro	01 -			●
	50	Lobito	99 -			●
CAGIVA						
	50	Corsa	98 -	1	●	
	50	Mantis	99 -	1	●	
	50	Progress	98 -	1	●	
DERBI						
DS	50		88	1	●	
FDX	50		89	1	●	
GP	50		01 -	1	●	
GP1	50		01 - 04	1	●	●
GP1	50		05 -			●
GPR	50	Nude	05 -			●
GPR	50	R	98 - 04			●
GPR	50	Racing	05 -			●
	50	Aceno	98 -	1	●	
	50	Atlantis	99 -	1	●	
	50	Atlantis (4T) / Bullet	04 -	1	●	
	50	Atlantis H2O / Wave	01 -	1	●	
	50	Aventura	95 -	1	●	
	50	Black Devil	04 -			●
	50	DRD Pro Corse	06 -			●
	50	Easy	96 -	1	●	
	50	Fenix	94 -	1	●	●
	50	Furax	95 -	1	●	●
	50	Hunter	97 -	1	●	
	50	Manhattan	99 -	1	●	
	50	Paddock	96 -	1	●	
	50	Predator LC	98 -	1	●	●
	50	Predator O2	00 -	1	●	●
	50	R DRD	05 -			●
	50	R Racer	05 -	1	●	●
	50	R X-Treme	05 -	1	●	●
	50	Rambla	06 -	1	●	●
	50	Savanah	91 -	1	●	
	50	Senda L	99 -	1	●	●
	50	Senda R / X-Treme	94 - 04	1	●	●
	50	Senda R DRD	03 - 04			●
	50	Senda SM / X-Treme	99 - 04	1	●	●
	50	Senda SM DRD	03 - 04	1	●	●
	50	Senda SM DRD Black Ed	03 -			●
	50	SM DRD / Racer	05 -			●
	50	SM X-Treme / X-Race	05 -			●
	50	Stinger	96 -	1	●	
	50	Urban	94 -	1	●	
	50	Vamos R / L / FL	95 -	1	●	
	50	Variant Sport R	01 -	1	●	
	100	Atlantis (4T)	04 -	1	●	
	100	Atlantis O2 / H2O	01 -	1	●	
	125	Atmosphere	99 -	1	●	
	125	Boulevard	04 -	1	●	

DERBI						
	125	GP1	05 -			●
	125	Predator	99 -	1	●	●
	150	Boulevard	04 -	1	●	
FACTORY						
SM	50	Chrono	04 -			●
SP	50	Chrono	04 -			●
RP	50	Desert	04 -			●
YR	50	Desert	04 -			●
GILERA						
	50	H@k	99 -	1	●	●
GSM	50	Supermotard	01 -	1	●	●
	50	Zulu	01 -	1	●	●
RCR	50		04 -	1	●	●
SMT	50		04 -	1	●	●
	125	Surfer	01 -	1	●	●
SC	125		06 -			●
HERO ENVOY						
	50		99 -	1	●	
HRD						
	50	Sonic 2 Supermotard	00 - 02			●
	50	Sonic 2 Trail	00 - 02			●
HUSQVARNA						
	50	SM	02 -			●
	50	WR	02 -			●
ITALJET						
	50	Dragster	99 -	1	●	●
	50	Formula Air	99 -	1	●	●
	50	Formula LC	98 -	1	●	●
	50	Formula Race	95 -	1	●	●
	50	Torpedo	97 -	1	●	
	50	Torpedo (4T)	01 -	1	●	
	50	Velocifero	94 -	1	●	
	125	Dragster	97 -	1	●	●
	125	Formula	96 -	1	●	●
	125	Formula LC	99 -	1	●	●
	125	Torpedo (4T) Pro	99 - 09	1	●	
	125	Twin	99 -	1	●	●
	150	Torpedo (4T) Pro	00 -	1	●	
	180	Dragster	99 -	1	●	●
MACAL						
	50	Trophy	99 -	1	●	
	50	Trophy H2O	99 -	1	●	
MALAGUTI						
NKD	50	Drakon	06 -			●
XSM	50		04 -			●
XTM	50		04 -	1	●	●
	50	Fifty	04 -			●
MBK						
	50	X-Limit	04 -	1	●	
	50	X-Power	04 -			●
MH (MOTORHISPANIA)						
MH	50	Furia 6v	99 -	1	●	●
MH	50	Furia Max	06 -	1	●	●
MH	50	Urban Bike	06 -			●
RX	50	Racing	00 -			●
RYZ	50	Enduro	05 -	1	●	●
RYZ	50	Supermotard	05 -			●
PEUGEOT						
	50	Buxy (AJP caliper)	94 -	1	●	
	50	Elyséo	02 -	1	●	●
	50	Elyséo (AJP caliper)	98 - 01	1	●	
	50	Elystar	02 - 07	1	●	
	50	Elystar Advantage	02 - 07	1	●	●
XP6	50	Enduro	03 - 10	1	●	●
	50	Jet C-Tech	09 -	1	●	●
	50	Jet Force	03 -	1	●	●
	50	Jet Force H2I	11 -	1	●	●
	50	Looxor	02 - 05	1	●	
	50	Looxor	06 -	1	●	●

1 - 2 = Nombre de jeux avant / Number of front sets / Anzahl Sets / Numero blister / Numero des juegos
L = Gauche / Left / Links / Sinistra / Izquierda - R = Droite / Right / Rechts / Destra / Derecha

3015 suite

Scooter — Maxi-scooter

SC — MSC

PEUGEOT						
	50	Ludix (All models 10")	04 - 09	1	●	
	50	Ludix 2 Trend 12"	07 - 10	1	●	
	50	Ludix Blaster Furious	09 -	1	●	●
	50	Ludix Blaster RCUP	09 -	1	●	●
	50	Ludix Blaster RS12	09 -	1	●	
	50	Ludix Elegance 14"	04 - 09	1	●	
	50	Metal-X (All models)	03 - 06	1	●	
	50	Speedake (AJP caliper)	94 -	1	●	
	50	Speedfight 2 Air Cooled	01 - 08	1	●	
	50	Speedfight 2 Furious/WRC/X-Race	03 - 08	1	●	●
	50	Speedfight 2 Liquid Cooled	01 - 08	1	●	●
	50	Speedfight LC (AJP caliper)	96 - 00	1	●	
	50	Squab (AJP caliper)	94 -	1	●	
XP S6	50	Street / Super Motard	04 -			●
XPS	50	Street / Top Road	03 - 09			●
	50	Streetzone 12	14 -	1	●	
XPS	50	Super Motard	03 - 10			●
XP6	50	Supermotard	03 - 09	1	●	●
	50	TKR / TKR WRC	05 -	1	●	
	50	TKR Street Zone / WRC	03 -	1	●	
XPS	50	Track / Enduro	03 - 09	1	●	●
XP6	50	Trail	04 - 05	1	●	●
	50	Trekker Metal X	01 -	1	●	
	50	Trekker Road (AJP caliper)	98 -	1	●	
	50	Trekker Street Board	00 -	1	●	
	50	Trekker Urban Black	00 -	1	●	
	50	Vivacity (AJP caliper)	99 - 07	1	●	
	50	Zenith LS	96 - 99	1	●	
XR-6	50		02 - 07			●
	100	Elyséo	02 -	1	●	●
	100	Elyséo (AJP caliper)	98 - 01	1	●	
	100	Looxor	01 - 04	1	●	●
	100	Speedfight (AJP caliper)	97 -	1	●	●
	100	Speedfight 2 Furious/WRC/X-Race	03 -	1	●	●
	100	Squab	98 -	1	●	●
	100	Streetzone 100 (4T)	14 -	1	●	
	100	Trekker Road	98 -	1	●	
	100	Vivacity (AJP caliper)	99 - 07	1	●	
	125	Elyseo (AJP caliper)	98 - 01	1	●	
	125	Looxor	03 - 08			●
	150	Looxor	03 -			●
PIAGGIO						
	50	Diesis	02 -	1	●	
	100	Diesis	02 -	1	●	
RIEJU						
SMX	50	(Cast wheel)	07 - 08	1	●	●
MRX	50	Castrol	01 - 02			●
RR	50	Castrol	00 - 02			●

RIEJU						
	50	FD4 Super Marathon	85	1	●	
	50	First / H2O	97 -	1	●	
RS2	50	Matrix (AJP caliper)	02 - 08			●
RS2	50	Matrix (J.Juan caliper)	07 - 09			●
RS2	50	NKD	05			●
	50	NKD	07			●
RS2	50	Pro (AJP caliper)	06 - 10			●
RS2	50	Pro (J.Juan caliper)	07 - 10			●
MRX	50	Pro / Top	04 - 08			●
SMX	50	Pro Street (Cast wheel)	06 - 08			●
SMX	50	Pro Supermotard / Top	04 - 07			●
	50	Spike	04 - 06	1	●	●
RRX	50	Spike (17" Cast wheel)	06 - 09	1	●	●
RRX	50	Spike (17" wheel / Spoke wheel)	03 - 08	1	●	●
	50	Spike pro	04			●
	50	Spike X50	06 - 07	1	●	●
RR	50	Sport	03 - 06	1	●	●
	50	Tango	07 - 10			●
	50	Tango Motard	09 - 10			●
RR	50	Thunderfire	97 - 02	1	●	●
MRX	50		03 - 08	1	●	●
RRX	50		06 - 09	1	●	●
RS1	50		97 - 00	1	●	●
RS1	50		01 -			●
SMX	50		02 - 06	1	●	●
	75	K6 / P6	87	1	●	
RST	80		91 -	1	●	●
ROXON						
	50	DUEL SM	06 -	1	●	●
	50	DUEL TT	06 -	1	●	●
SACHS						
	50	Madass (2T)	04 - 05			●
	50	Madass (4T)	04 - 05			●
SHERCO						
	50	Enduro (2T)	02 - 07			●
	50	Supermotard (2T)	02 - 07			●
SIMSON						
	125	Star	99 -	1	●	
SUZUKI						
DR	50	Big	89 -	1	●	
UF	50	Estilete	00 - 02	1	●	
SMX	50	Super Motard	98 -	1	●	●
AY	50	WRK1-WRK5 Katana (AJP caliper)	01 - 05	1	●	●
AY	50	WRK2-WRK4 Katana (Grimeca caliper)	99 - 04			●
RMX	50		98 -	1	●	●
YAMAHA						
DT	50	R	04 -	1	●	
TZR	50		03 - 08			●

Scooter — Maxi-scooter

MSC

3017

HONDA						
CN	250	Helix (Fusion)	92	1	●	
CN	250	Scooter	88 - 92	1	●	
CN	250	Scooter	93 -	1	●	
CN	250	Spazio	90 - 97	1	●	

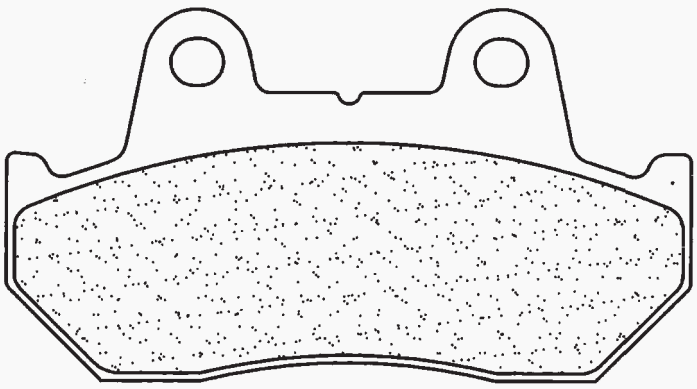

Dim. / Size

90 mm
49 mm
9 mm

1 - 2 = Nombre de jeux avant / Number of front sets / Anzahl Sets / Numero blister / Numero des juegos
L = Gauche / Left / Links / Sinistra / Izquierda - R = Droite / Right / Rechts / Destra / Derecha

Scooter	Maxi-scooter
SC	MSC

3018

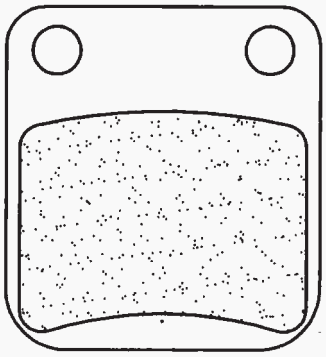

Dim. / Size

41.2 mm
45.2 mm
8 mm

DAELIM					
	50	Cordi	06 - 1	●	
	50	Delfino	99 - 1	●	
	50	E-Five	03 - 1	●	
	50	History	01 - 1	●	
	50	Message II	02 - 1	●	
	50	S-Five	01 - 05 1	●	
	50	Tapo	99 - 1	●	
	50	Vivo	99 - 1	●	
	100	Delfino	99 - 1	●	
	125	DLX / Otello DLX	01 - 1	●	●
	125	History	01 - 1	●	●
NS	125	II	00 - 1	●	
	125	Message II	00 - 1	●	
	125	Otello	99 - 1	●	
	125	Otello	08 -		●
	125	S2 FI	07 -		●
	125	U3 FI	07 -		●
S2	125		05 -		●
S2	250	Free Wind	05 -		●
HONDA					
SC	50	1-ZX	92 - 1	●	
SP	50		- 91 1	●	
PEUGEOT					
	50	New Vivacity (2T / 4T)	08 - 13 1	●	
	125	Sum-Up	08 - 1	●	
SACHS					
	50	Madass (4T)	06 - 09		●
	125	Madass (4T)	06 - 09		●

Scooter	Maxi-scooter
SC	MSC

Dim. / Size

81.1 mm
42 mm
8.5 mm

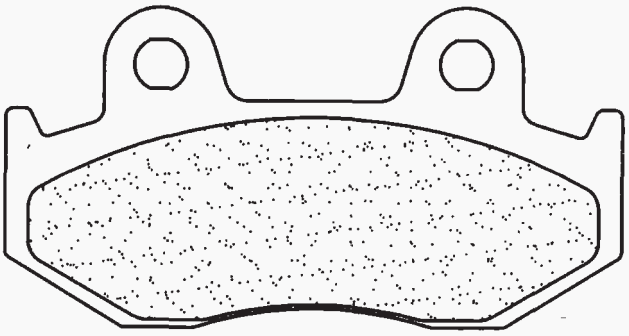

HONDA					
	100	Lead	00 - 1	●	
NES	125	@	01 - 1	●	
SH	125		02 - 08 1	●	
NES	150	@	01 - 1	●	
SH	150		02 - 08 1	●	
CH	250	Spacy	85 - 86 1	●	
CH	250	Spacy / Freeway Fusion	88 - 1	●	
CN	250	Spazio	88 - 89 1	●	
ITALJET					
	50	Rollercraft	08 - 1	●	
PGO					
	50	T-Rex 3	02 - 1	●	

3019

Scooter	Maxi-scooter
SC	MSC

Dim. / Size

79 mm
47.1 mm
7.5 mm

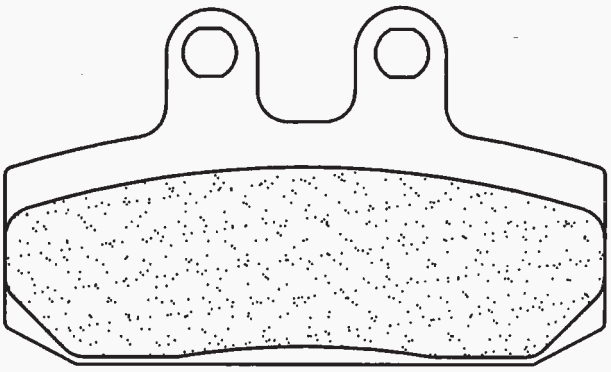

HONDA					
SJ	50	Bali	93 - 99 1	●	
SJ	100	Bali	97 - 1	●	
EX	100	Bali	96 - 1	●	
MALAGUTI					
	125	Runner	87 - 1	●	
	500	Spidermax GT	04 - 2	●	
	500	Spidermax RS	09 - 2	●	

3020

1 - 2 = Nombre de jeux avant / Number of front sets / Anzahl Sets / Numero blister / Numero des juegos
L = Gauche / Left / Links / Sinistra / Izquierda - R = Droite / Right / Rechts / Destra / Derecha

Scooter Maxi-scooter

MSC

3021

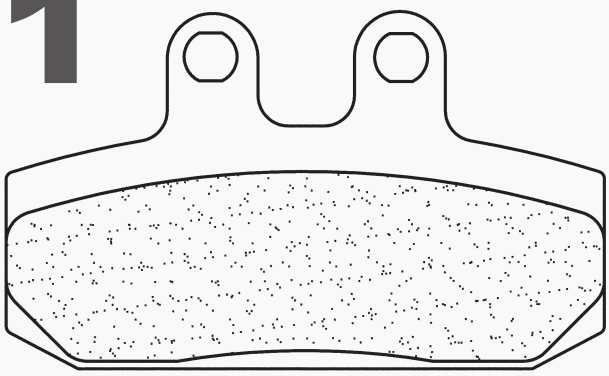

Dim. / Size
79 mm
47.1 mm
8.7 mm

APRILIA						
	125	Leonardo (Grimeca caliper)	99 -	1	●	
	125	Scarabeo / Scarabeo GT	99 - 03	1	●	
	125	Sportcity	05 -	1	●	
	150	Leonardo (Grimeca caliper)	99 -	1	●	
	150	Scarabeo	99 - 03	1	●	
	200	Scarabeo / Scarabeo GT	02 - 03	1	●	
	200	Sportcity	05 -	1	●	
	250	Leonardo (Grimeca caliper)	99 -	1	●	
	250	Sportcity ie	07 -	1	●	
	300	Leonardo (Grimeca caliper)	05 -	1	●	
	400	Scarabeo ie	07 -	1	●	
	500	Atlantic	02 - 05	1 L	●	
	500	Scarabeo	03 - 09	1 L	●	
	500	Scarabeo Class	10 -	1	●	
SIMSON						
	125	Schikra	99 -	1	●	

Scooter Maxi-scooter

SC MSC

3022

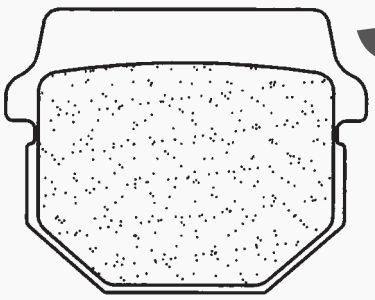

Dim. / Size
47.4 mm
37.1 mm
8.7 mm

Dim. / Size
85 mm
42.5 mm
6.5 mm

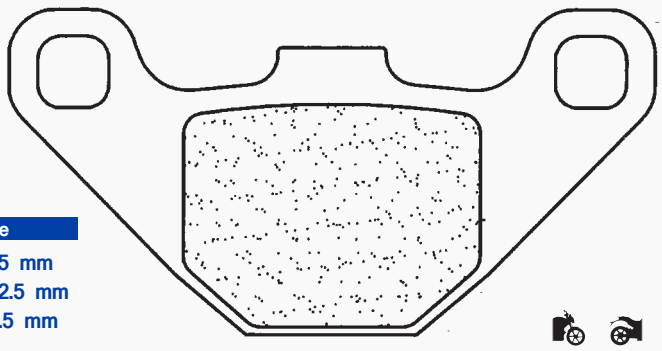

ADLY						
	50	Panther	01-	1	●	
	50	Silver Fox	06 -	1	●	
	50	Super Sonic	00 -	2	●	
RS	50	Super Sonic	06 -	1	●	●
	50	Thunderbike	97 -	1	●	
RT	100	Panther	01 -	1	●	
RT	100	Silver Fox	06 -	1	●	
RT	100	Super Sonic	01 -	2	●	
RT	100	Thunderbike	01 -	2	●	●
RT	125	Super Sonic	01 -	2	●	
RT	125	Thunderbike	01 -	2	●	●
AEON						
	50	Aero	06 -	1	●	
	50	Regal	06 -	1	●	
	50	Torch	06 -	1	●	
	90	Regal	06 -	1	●	
	100	Pulsar	06 -	1	●	
	110	Aero	06 -	1	●	
	110	Pulsar	06 -	1	●	
	125	Pulsar	06 -	1	●	
	150	Pulsar	06 -	1	●	
CPI						
	50	Hussar	01 - 02	1	●	
	50	Mars	01 -	1	●	
	50	Popcorn	01 - 02	1	●	
FANTIC						
	50	Regolama Casa	08 -			●
	50	Supersei Motard	08 -			●
GARELLI						
	125	Raider	02 -	1	●	
GILERA						
	50	Eaglet	97 -			●
	50	RCR	11 -	1	●	●
	50	SMT	11 -	1	●	●
	50	Stalker (Heng Tong Caliper)	03 - 11	1	●	
HYOSUNG						
	50	Avanti	99 -	1	●	
	50	Rush	97 -	1	●	
	50	Sense	98 -	1	●	
	50	Super Cab	95 -	1	●	

HYOSUNG						
	50	Super Cab Plus	98 -	1	●	
SB	50		00 -	1	●	
SD	50		00 -	1	●	
SF	50		99 -	1	●	
	100	Cab	98 -	1	●	
EZ	100		00 -	1	●	
KR	110	Master	04 -	1	●	
	110	Midas Plus	98 -	1	●	
FX	110		02 -	1	●	
ITALJET						
	100	Millenium	00 - 01	1	●	
	125	Millenium	00 - 01	1	●	
	150	Millenium	00 - 01	1	●	
KEEWAY						
	50	Flash	07 -	1	●	
	50	Hurricane	06 -	1	●	
	90	Hurricane	06 -	1	●	
	125	Matrix	06	1	●	
KREIDLER						
	25	Florett XL	99 -	1	●	
	50	Florett	99 -	1	●	
MAICO						
	50	Cruiser	99 -	1	●	
R-1	50	Superbike	99 -	1	●	
	50	Thunderbike I / II	99 -	1	●	
	50	Trafficjammer	99 -	1	●	
MALAGUTI						
	125	Blog	10 -			●
	160	Blog	10 -			●
MZ / MUZ						
	50	Moskito	99 - 02	1	●	
	125	Moskito	02	1	●	
PEUGEOT						
	50	Buxy (Hengtong caliper)	94 -	1	●	
	50	Elyseo (Hengtong caliper)	98 -	1	●	
	50	Kisbee (4T)	10 -	1	●	
	50	Speedake (Hengtong caliper)	94 -	1	●	
	50	Speedfight LC (Hengtong caliper)	96 - 00	1	●	
	50	Squab (Hengtong caliper)	94 -	1	●	
	50	Trekker Off Road (Hengtong caliper)	98 -	1	●	
	50	Vivacity (Hengtong caliper)	05 -	1	●	
	50	Zenith (Hengtong caliper)	96 -	1	●	

1 - 2 = Nombre de jeux avant / Number of front sets / Anzahl Sets / Numero blister / Numero des juegos
L = Gauche / Left / Links / Sinistra / Izquierda - R = Droite / Right / Rechts / Destra / Derecha

3022 suite

Scooter Maxi-scooter

SC MSC

PEUGEOT						
	100	Kisbee (4T)	12 - 14	1	●	
	100	Speedfight (Hengtong caliper)	97 -	1	●	
	100	Vivacity (Hengtong caliper)	05 -	1	●	
	150	Django Allure (4T)	14 -			●
	150	Django Evasion (4T)	14 -			●
	150	Django Sport (4T)	14 -			●
PGO						
	50	Big Max	03 -	1	●	
	50	Comet Sport	91 -	1	●	
	50	Galaxy	91 -	1	●	
	50	Road 66	95 -	1	●	
PS	50		93 -	1	●	
	90	Galaxy	92 -	1	●	
PIAGGIO						
NRG	50	Power DD	06 -	1	●	
NRG	50	Purejet	06 -	1	●	
NRG	50	Silver Bullett	10	1	●	
	50	Typhoon	06 -	1	●	
QUADRO						
3D	350	S	11 -			●
3D	350	S (Parking brake)	11 -	1	●	
4	350		15 -			●
SHERCO						
	50	SE - R / SM - R	14 -	1	●	●
SIAM						
	50	Mat	97 -	1	●	
	100	Mat	97 -	1	●	
SULA						
	50	Thunder Bird	99 -	1	●	
	100	Thunder Bird	99 -	1	●	
SULA						
	125	Thunder Bird	99 -	1	●	
SUZUKI						
AH	50	N Address (CA1GA) Italian Market	92 - 95	1	●	
ZZ	50	Scooter	92 -	1	●	
CC	50	Tune	92 -	1	●	
AJ	50	ZZ Sepia	92 -	1	●	
LIDO	75	Style	84 -	1	●	
AH	80	Address	88 -	1	●	
AH	80	Scooter	92 - 94	1	●	
AJ	80	ZZ Sepia	90 -	1	●	
AH	100	Address	91 - 96	1	●	
UE	125	CTK1	01 - 03	1	●	
AN	125	HKK5	06 - 08	1	●	
CS	125	LIDO	90 -	1	●	
UE	150	CTK1	02 -	1	●	
TGB						
	50	303 Revolution	02 - 03	1	●	
	50	303R Hawk / laser	04 -	1	●	
	50	City (2T) / City (4T)	07 -	1	●	
	50	Delivery / Express (From E/F no 609100)	06 - 09	1	●	
	50	F409 Cruise	02 - 05	1	●	
	50	Generic Trigger	02 -	1	●	
	50	High Wheel	02 -	1	●	
	50	X Bullet R	06 -			●
	125	204 Classic	03 - 04	1	●	
	125	303 Revolution	02 - 03	1	●	
	125	F409	02 - 05	1	●	
	125	X-Bullet R	08 -			●

3024

Scooter Maxi-scooter

SC

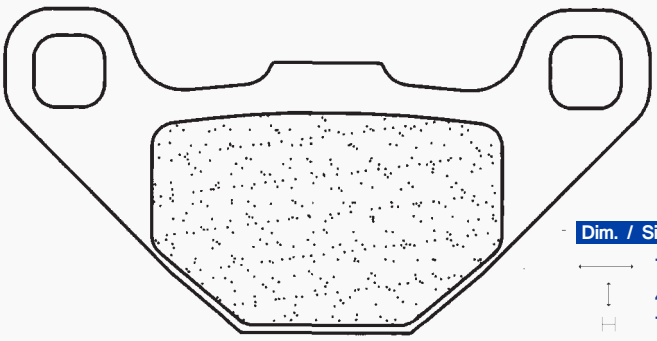

Dim. / Size
79 mm
47.1 mm
7.5 mm

MALAGUTI						
F-10	50		92 - 93	1	●	
PEUGEOT						
SV	50	Rolland Garros	93 -	1	●	
SV	50	Sport	93 -	1	●	
SV	50	T	93 -	1	●	
	125	Django Allure (4T)	14 -			●
	125	Django Evasion (4T)	14 -			●
	125	Django Sport (4T)	14 -			●
SULA						
	50	City Bird	99 -	1	●	

Dim. / Size
56 mm
34.9 mm
8.7 mm

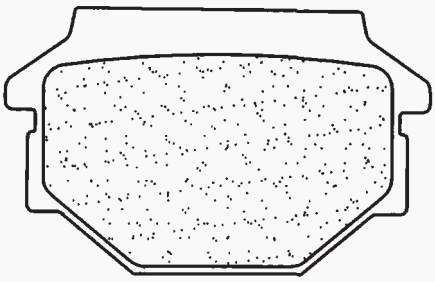

3025

Scooter Maxi-scooter

MSC

Dim. / Size
94 mm
40.7 mm
10 mm

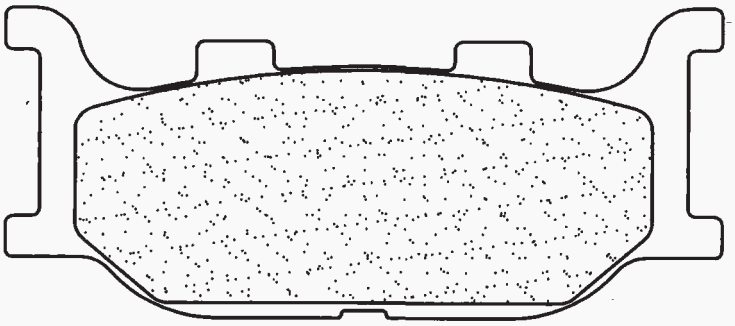

BAOXIN						
BX	125	L	97 -	1	●	
ITALJET						
	125	Jupiter	02 -	1	●	
	150	Jupiter	02 -	1	●	
MBK						
	250	Jupiter	02 -	1	●	
	250	Skyliner	96 - 98	1	●	
	250	Skyliner	99 - 02	1	●	
	400	Skyliner	04 -	1	●	
QUINGOI						
QM	125	2V	02 -	1	●	

1 - 2 = Nombre de jeux avant / Number of front sets / Anzahl Sets / Numero blister / Numero des juegos
L = Gauche / Left / Links / Sinistra / Izquierda - R = Droite / Right / Rechts / Destra / Derecha

Scooter Maxi-scooter

MSC

3025 suite

YAMAHA					
YP	250	Majesty	96 - 98	1	●
YP	250	Majesty	99 - 03	1	●
YP	250	Majesty DX / ABS	98 - 99	1	●
CP	250	Maxam / Morphus	05 - 08	1	●
YP	400	Majesty	05 -	2	●
XP	500	T-Max (S/T/V) (Pin for hand brake)	04 - 07	2	●

Scooter Maxi-scooter

MSC

3026

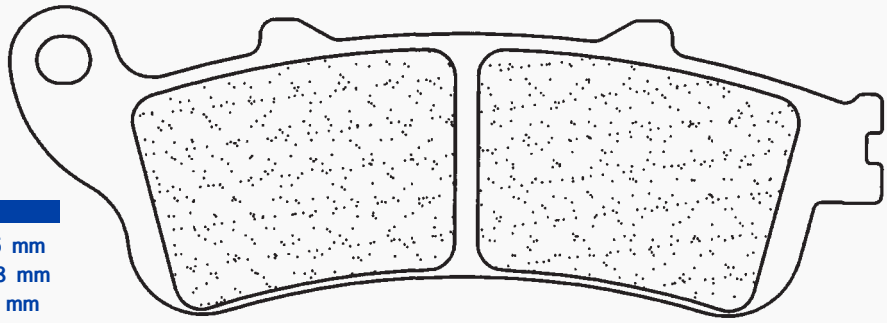

Dim. / Size
115 mm
38.8 mm
8.5 mm

GARELLI					
	250	Skynet	02 -	1	●
	400	Skynet	02 -	1	●
HONDA					
FES	125	Panthéon	98 - 02	1	●
FES	125	Panthéon	03 -	1	●
FES	150	Panthéon	99 - 02	1	●
FES	150	Panthéon	03 -	1	●
FES	250	Foresight	98 - 99	1	●

HONDA					
FES	250	Foresight	00 -	1	●
NSS	250	Forza	00 - 04	1	●
NSS	250	Jazz	01 - 04	1	●
FJS	400	Silver Wing	06 - 08	1	●
FJS	600	Silver Wing / Silver Wing ABS	01 -	2	●
PEUGEOT					
SV	250		01 - 02	1	●

Scooter Maxi-scooter

SC

3027

Dim. / Size
45.8 mm
52.7 mm
6.4 mm

CPI					
	50	GTS	02		●
MBK					
	50	Nitro	97 -		●
	50	Stunt	99 -	1	●
	100	Nitro	01 -		●
QUADRO					
4	350		15 -	2	●
YAMAHA					
YQ	50	Aerox / Aerox R	97 -		●
EW	50	Slider	00 - 05	1	●

Scooter Maxi-scooter

MSC

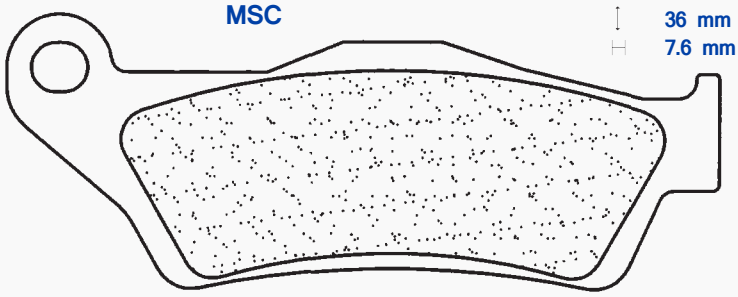

Dim. / Size
94 mm
36 mm
7.6 mm

3028

APRILIA					
	850	SRV	12 -	2	●
GILERA					
	500	Nexus	04 -	2	●
GP	800		08 -	2	●
MBK					
	125	Skyliner	98 - 00	1	●
	125	Skyliner	01 - 10	1	●
	125	Thunder	01 - 03	1	●
	150	Skyliner	01 -	1	●
	150	Thunder	01 - 03	1	●

MBK						
	150	Vertex	97 -	1	●	
	180	Skyliner	04 -	1	●	
	300	Kilibre	03 - 04	1	●	●
PIAGGIO						
	400	Beverly ie	07 -	1	●	
	500	X9 Evo	03 - 06	2	●	
	500	X9 Evo ABS	04 -	2	●	
SUZUKI						
UH	125	Burgman	02 - 06	1	●	
UH	150	Burgman	04 - 06	1	●	
YAMAHA						
YP	125	Majesty	98 - 00	1	●	
YP	125	Majesty	01 - 09	1	●	
XQ	125	Maxster	01 - 03	1	●	
YP	150	Majesty	01 -	1	●	
XQ	150	Maxter	01 -	1	●	
YP	180	R Majesty	04 -	1	●	
YP	180	R Majesty	03	1	●	
XC	300	Versity	03 - 05	1	●	●
XC	300	Versity	06 -			●

1 - 2 = Nombre de jeux avant / Number of front sets / Anzahl Sets / Numero blister / Numero des juegos
L = Gauche / Left / Links / Sinistra / Izquierda - R = Droite / Right / Rechts / Destra / Derecha

Scooter Maxi-scooter

SC MSC

3029

Dim. / Size
61 mm
27 mm
7 mm

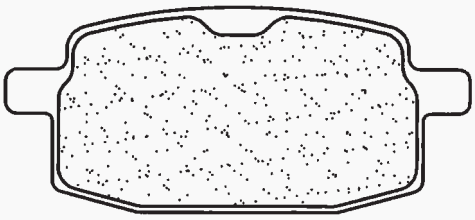

ADLY						
	25	Silver Fox	00 - 05	1	●	
	50	Cat	01-	1	●	
	50	Cosy	01-	1	●	
	50	Fox	00 -	1	●	
	50	Fox Plus	01 -	1	●	
	50	Jet	96 -	1	●	
	50	Pista, Pista Twin Light	96 -	1	●	
RT	50	Road Tracer	02 -	1	●	
	50	Silver Fox	00 - 05	1	●	
	70	Fox plus	01 -	1	●	
	70	Pista, Pista Twin Light	01 -	1	●	
	80	Cosy	01 -	1	●	
RT	90	Road Tracer	02 -	1	●	
	100	Cat	01 -	1	●	
	100	Jet	96 -	1	●	
RT	100	Road Tracer	02 -	1	●	
	100	Silver Fox	01 - 05	1	●	
	125	Cat	01 -	1	●	
BENELLI						
KB-X	50	Race		1	●	
CAGIVA						
	50	City	08 -	1	●	
FANTIC						
	50	Big Wheel	94 -	1	●	
	50	Grinta	95 -	1	●	
	50	Leader	95 -	1	●	
	50	Pony SR	93 -	1	●	
	50	Queenie	95 -	1	●	
GARELLI						
SR	50	Pony	95 -	1	●	
PMX	50	Rally	00 -	1	●	
	50	Starter	02 -	1	●	
CPR	50		02 -	1	●	
FX	50		02 -	1	●	
ITALJET						
	50	Bazooka	93 -	1	●	
	50	Cruise	95 -	1	●	
	50	Pista 2	93 -	1	●	
	50	Scoop	93 -	1	●	
	50	Yankee 8	94 -	1	●	●

LEM						
	50	Flash	94 -	1	●	
MBK						
	50	Target	92 -	1	●	
MZ / MUZ						
	50	Moskito FB	97 - 03	1	●	
	50	Moskito SX JP50	00 - 03	1	●	
PEUGEOT						
	50	V-Clic (4T)	08 -	1	●	
PGO						
	50	Big Max	94 - 02	1	●	
	50	Big Max Sport	96 -	1	●	
	50	Comet	93 -	1	●	
	50	EPS	96 -	1	●	
	50	Hot	97 -	1	●	
	50	Mega	96 -	1	●	
	50	Tornado	96 -	1	●	
PMX	50		98 -	1	●	
	80	1.25 Big Max	94 -	1	●	
	90	Big Max	96 -	1	●	
	90	Tornado	00 -	1	●	
	100	Big Max	94 -	1	●	
PMX	110		00 -	1	●	
	125	Kung Fu				●
	125	Tornado	96 -	1	●	
SHE-LUNG						
	50	Falcon	97 -	1	●	
	125	Mars	97 -	1	●	
SIAMOTO						
	50	Birdie	02 -	1	●	
TGB						
	250	Dynasty	06 -			●
YAMAHA						
CS	50	JOG (Spain)	88 -	1	●	
CY	50	RS JOG R	96 -	1	●	
CR	50	Target	91 -	1	●	
CR	50	Z	91 - 95	1	●	
YA	50	ZA Jog Z	95 -	1	●	
BW'S	100		96 -	1	●	

Scooter Maxi-scooter

SC MSC

3031

Dim. / Size
77 mm
42 mm
7.5 mm

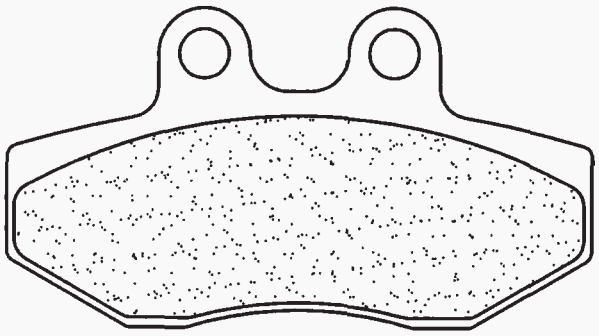

Dim. / Size
94.5 mm
42 mm
7.5 mm

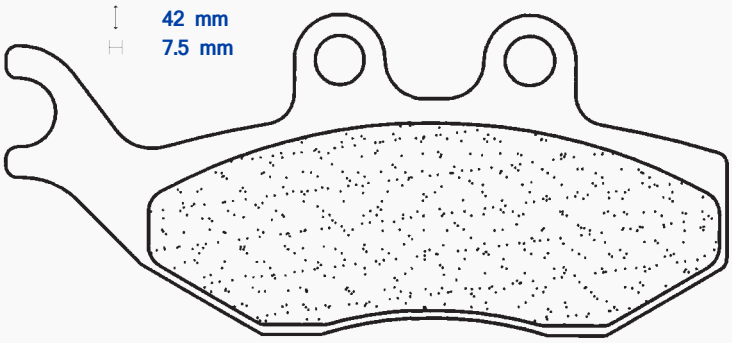

APRILIA						
	50	MX	03 -	1	●	
	50	RS / RS Replica	00 - 05	1	●	
	50	RS Tuono	03 -	1	●	
	50	RX	90 -	1	●	
	50	RX Racing	04 -	1	●	

BENELLI						
	400	Velvet Dusk	03 -	1	●	
CPI						
	50	GTR	02	1	●	
	50	GTS	02	1	●	
	125	GTR / GTS	02 -	1	●	

1 - 2 = Nombre de jeux avant / Number of front sets / Anzahl Sets / Numero blister / Numero des juegos
L = Gauche / Left / Links / Sinistra / Izquierda - R = Droite / Right / Rechts / Destra / Derecha

3031 suite

Scooter SC	Maxi-scooter MSC					
CPI						
	200	GTR / GTS	02 -	1	●	
DERBI						
	50	Black Devil	04 -	1	●	
	50	R DRD	05 -	1	●	
	50	Senda SM DRD Black Ed	03 -	1	●	
	50	SM DRD / Racer	05 -	1	●	
	50	SM X-Treme / X-Race	05 -	1	●	
FACTORY						
SM	50	Chrono	04 -	1	●	
SP	50	Chrono	04 -	1	●	
RP	50	Desert	04 -	1	●	
YR	50	Desert	04 -	1	●	
FANTIC						
	50	Regolarna Casa	08 -	1	●	
	50	Supersei Motard	08 -	1	●	
GAS GAS						
EC	50	Rookie	05 -	1	●	
GENERIC						
	50	Toxic	07 -	1	●	
	50	Trigger SM	06 -	1	●	
	50	Trigger SM Competition	08 -	1	●	
	50	Trigger X	06 -	1	●	
	50	Trigger X Competition	08 -	1	●	
GILERA						
DNA	50	(Grimeca caliper)	00 -	1	●	
	50	Runner PJ	06 -	1	●	
	50	Runner SP	06 -	1	●	
DNA	125	(Grimeca caliper)	01 -	1	●	
VX	125	Runner (4T) (Grimeca caliper)	01 -	1	●	
FX	125	Runner/SP (Grimeca caliper)	00 -	1	●	
	175	Mad Mud	02 -	1	●	
DNA	180	(Grimeca caliper)	01 -	1	●	
FXR	180	Runner	98 - 99	1	●	
VXR	180	Runner (4T) (Grimeca caliper)	01 -	1	●	
FXR	180	Runner/SP (Grimeca caliper)	00 -	1	●	
VXR	200	Runner (4T) (Grimeca caliper)	01 -	1	●	
FX	200	Runner SP	98 -	1	●	
KEEWAY						
TX	50	SM	10 -	1	●	
MALAGUTI						
XSM	50		04 -	1	●	
	50	Fifty	04 -	1	●	
CH	50		86 -	1	●	
	125	Madison	99 -	1	●	
	125	Phantom Max	04 -	1	●	
MALAGUTI						
	150	Madison	99 -	1	●	
	180	Madison	02 -	1	●	
	200	Madison	03 -	1	●	
	200	Phantom Max	04 -	1	●	
	250	Madison ie	06 -	1	●	
	250	Madison RS	04 - 07	1	●	
	250	Password	05 -	1	●	
	250	Phantom Max	04 - 08	1	●	
MBK						
	50	X-Limit Supermotard	04 -	1	●	
	50	X-Power	04 -	1	●	

MH (MOTORHISPANIA)						
MH	50	Urban Bike	06 -	1	●	
PEUGEOT						
XP S6	50	Street / Super Motard	04 -	1	●	
XPS	50	Street / Top Road	03 - 09	1	●	
XPS	50	Super Motard	03 - 10	1	●	
	125	Elyséo	03 -	1	●	
	125	Elystar	03 -	1	●	
	125	Geopolis	06 -	1	●	
	125	Jet Force / Compressor	03 -	1	●	
	125	Satelis	06 - 09	1	●	
	125	Satelis Compressor	06 - 11	1	●	
	125	Satelis RS	07 - 13	1	●	
	150	Elyséo	01 -	1	●	
	150	Elystar	03 -	1	●	
	250	Geopolis (AJP caliper) / ABS	06 - 09	1	●	
	250	Satelis (AJP caliper)	07 - 10	1	●	
	400	Geopolis (AJP caliper)	07 - 10	1	●	
PIAGGIO						
	125	Beverly (Grimeca caliper)	02 - 06	1	●	●
LX	125	Hexagon	98 - 99	1	●	
LX4	125	Hexagon	98 - 99	1	●	
LX	125	Skipper / ST	99 -	1	●	
GTX	125	Super Hexagon (Grimeca caliper) 11"	00 -	1	●	
LXT	180	Hexagon	99 -	1	●	
GTX	180	Super Hexagon (Grimeca caliper) 11"	00 -	1	●	
LX	180		98 - 99	1	●	
	200	Beverly (Grimeca caliper)	02 - 06	1	●	●
BV	200		05 -			●
LXT	200		98 -	1	●	
LX4	250	Hexagon	98 - 99	1	●	
GT	250	Hexagon	99 -	1	●	
GTX	250	Super Hexagon	01 -	1	●	
RIEJU						
RS2	50	NKD	05	1	●	
RS2	50	Pro (AJP caliper)	06 - 10	1	●	
MRX	50	Pro / Top	04 - 08	1	●	
SMX	50	Pro Street (Cast wheel)	06 - 08	1	●	
SMX	50	Pro Supermotard / Top	04 - 07	1	●	
SHERCO						
	50	SM 0.5 Black Panther	08 - 10	1	●	
VESPA						
GT	125	Granturismo (Grimeca caliper)	03 - 06	1	●	
GT	200	L Granturismo (Grimeca caliper)	03 - 06	1	●	
YAMAHA						
DT	50	X Supermotard	04 -	1	●	
TZR	50		03 - 08	1	●	

Scooter MSC	Maxi-scooter MSC					
ITALJET						
	125	Jupiter	02 -			●
	150	Jupiter	02 -			●
MBK						
	125	Cityliner	08 -			●
	250	Skyliner	99 - 02			●
YAMAHA						
RZ	50	(5FC1/2)	02 -	1	●	
YP	250	Majesty	99 - 03			●
YP	250	Majesty DX / ABS	98 - 99			●
YP	250	R X-Max	05 - 09			●
YP	250	R X-Max	10 - 13			●
YP	250	R X-Max	14 -			●
VP	250	X-City	07 -			●

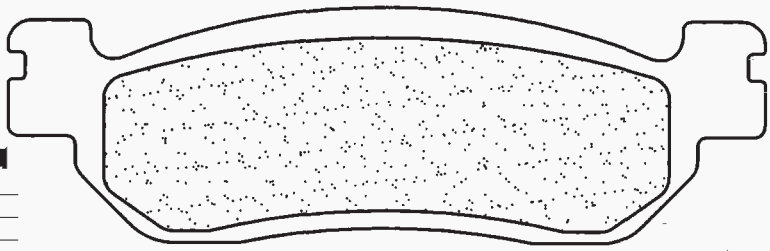

Dim. / Size

99.8 mm
31 mm
9 mm

3033

1 - 2 = Nombre de jeux avant / Number of front sets / Anzahl Sets / Numero blister / Numero des juegos
L = Gauche / Left / Links / Sinistra / Izquierda - R = Droite / Right / Rechts / Destra / Derecha

Scooter Maxi-scooter

SC

3034

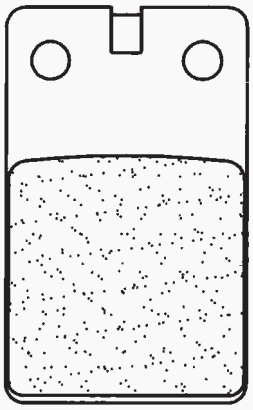

Dim. / Size

31.6 mm
52 mm
5.5 mm

APRILIA					
	50	Red Rose	88 - 89	1	●
GILERA					
	50	503	91 -	1	● ●
	50	Bullit	90 -	1	●
R	50		96 -	1	●
MALAGUTI					
CR 1	50	Crosser	95 -	1	●
	50	Fifty Full / CX / Top	85 -	1	●
	50	Fifty Mistral	90 -	1	●
F-15	50	Fire Fox	96 - 99	1	●
F-12	50	Phantom	94 - 98	1	●
RST	50	Sport	87 -	1	● ●

Scooter Maxi-scooter

SC

3036

Dim. / Size

77 mm
42 mm
8.3 mm

Dim. / Size

96.6 mm
42 mm
8.3 mm

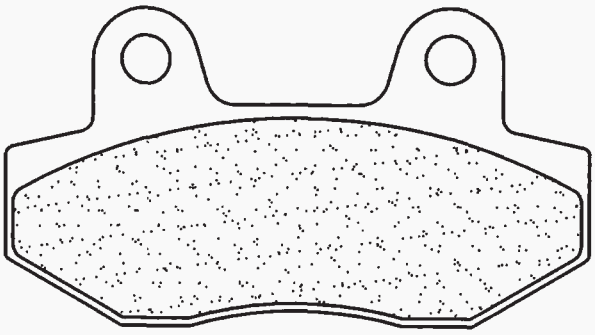

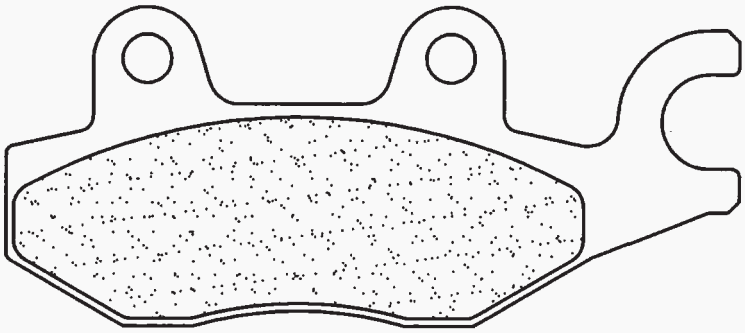

MBK					
	50	X-Power	98 - 03	1	●
YAMAHA					
TZM	50	R	94 -	1	●
TZR	50		90 - 92	1	●
TZR	50		93 - 02	1	●

Scooter Maxi-scooter

SC MSC

3037

Dim. / Size

35.3 mm
51.5 mm
6 mm

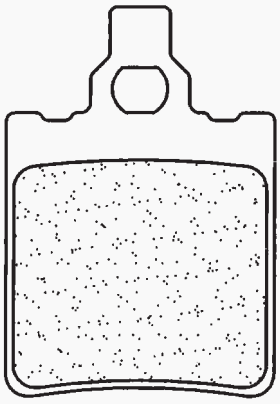

APRILIA					
AF-1	50	AE	86 -		●
AF-1	50	Europa / Futura	90 -		●
	50	MX	03 -		●
	50	RS	96 - 99		●
	50	RS / RS Replica	00 - 05		●
	50	RS Tuono	03 -		●
	50	RX	90 -		●
	50	RX Racing	04 -		●
	50	Tuareg	86 -		●
	50	Tuareg Rally	90 -		●
	125	Leonardo	96		●
FANTIC					
	50	Oasis	90 -		●
KEEWAY					
TX	50	SM	10 -		●
KYMCO					
	125	Freeway	93 - 95	1	●
MALAGUTI					
ES	50	Dune	89 -	1	● ●
	50	Evolution	91 -	1	●

1 - 2 = Nombre de jeux avant / Number of front sets / Anzahl Sets / Numero blister / Numero des juegos
L = Gauche / Left / Links / Sinistra / Izquierda - R = Droite / Right / Rechts / Destra / Derecha

Scooter Maxi-scooter

SC MSC

3038

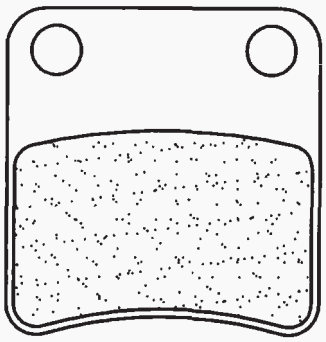

Dim. / Size

40.9 mm
42.7 mm
8 mm

CAGIVA				
	50	City	92 - 94	1
DAELIM				
	50	Bonita	09 -	1
	50	G Message	98 -	1
	50	S-Five	06 -	1
GARELLI				
	125	Panther	02 -	1
	150	Panther	02 -	1
	250	Panther	02 -	1
HONDA				
GP	50	Dio	89 -	1
SR	50	Dio	93 -	1
	50	Giorno	92 -	1
	50	Jazz	92 -	1
ZX	50	Super Dio	92 -	1
SR	50	Super Dio	91 - 92	1
	50	Tact S	93 -	1
HSC	50	ZR / 01 Scooter	92	1
SP	50		92 -	1
SYM				
	50	City Hopper	99 - 02	1
	50	Orbit	08 - 09	1
	50	Super Fancy	98 -	1
	125	Orbit	08 - 09	1

Scooter Maxi-scooter

SC MSC

3039

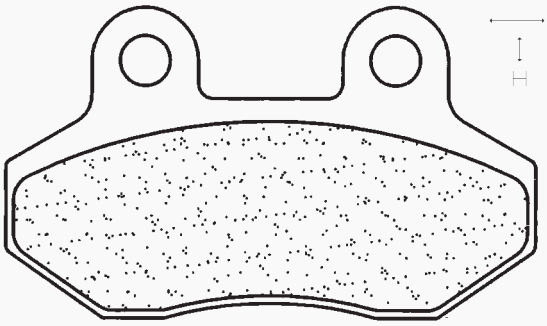

Dim. / Size

69.8 mm
41 mm
8.2 mm

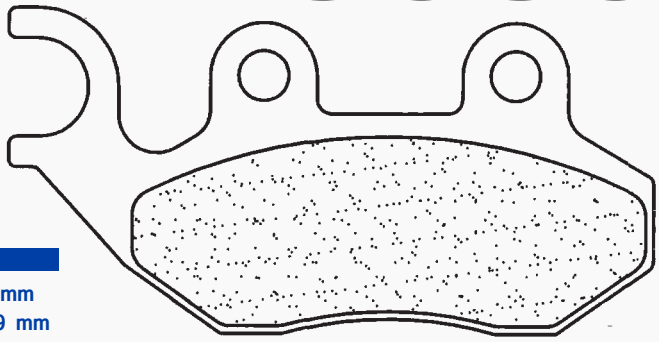

Dim. / Size

85 mm
42.9 mm
8.2 mm

CAGIVA				
	50	City	95 -	1
GARELLI				
PMX	50	Sport	00 -	1
KRS	50		02 -	1
	125	Freeland	02 -	1
	125	T-Rex	00 -	1
	150	Freeland	02 -	1
PEUGEOT				
	50	Tweet (4T)	10 -	1
	125	Django Heritage (4T)	14 -	1
	125	LXR	10 -	1
	125	Tweet	10 -	1
	125	Tweet RS	10 -	1
	150	Django Heritage (4T)	14 -	1
	150	Tweet	10 -	1
	200	LXR	10 -	1
PGO				
		i-Dep (Electric)	09 -	1
	50	Dr. Big	01 -	1
	50	G-max	06 -	1
	50	Libra	10 -	1
	50	Ligero	06 -	1
PMX	50	Naked	06 -	1
PMX	50	Sport	01 -	1
	50	T-Rex	99 -	1
PMS	50		99 -	1
	100	My Bubu	02 -	1
	110	T-Rex	99 -	1
	125	Charge A / B	02 -	1
	125	Ligero	06 -	1
	125	My Bubu / Young Bubu	02 -	1
PGO				
	125	T Rex	99 -	1
	150	TR3	02 -	1

PGO				
	150	T-Rex	01 -	1
SYM				
	50	Fiddle II	08 - 14	1
	50	Fiddle III	14 -	1
	50	Jet 4 (4T)	10 -	1
	50	Jet Alpha	95 -	1
	50	Jet BasiX	06 - 09	1
	50	Jet Euro X	06 -	1
	50	Jet Euro X S	99 - 05	1
	50	Jet Sport X SR	06 -	1
	50	Jungle	96 -	1
	50	Mask / Mask LC	00 - 05	1
	50	Red Devil	99 - 09	1
	50	Super Fancy	95 - 97	1
	50	Symphony (4T)	09 -	1
	50	Symply	07 -	1
	100	Jet	99 - 00	1
	100	Jet Euro X	05 -	1
	100	Jet Sport X	06 -	1
	100	Party	97 -	1
	100	Super Fancy	95 -	1
	110	Star	03 -	1
	125	Attila	95 -	1
	125	Citycom	08 -	1
HD	125	Evo i	07 - 10	1
	125	Fiddle II	08 -	1
	125	Jet 4 (4T)	10 -	1
	125	Megalo	00 - 07	1
	125	New Duke	02 -	1
HD	125	S Evo	07	1
	125	Super Duke	99 - 02	1
	125	Symphony (4T)	09 -	1
	125	Symply	07 - 09	1

1 - 2 = Nombre de jeux avant / Number of front sets / Anzahl Sets / Numero blister / Numero des juegos
L = Gauche / Left / Links / Sinistra / Izquierda - R = Droite / Right / Rechts / Destra / Derecha

3039 suite

Scooter	Maxi-scooter
SC	MSC

SYM						
	150	Attila	00 -	1	●	
	150	Super Duke	99 - 02	1	●	
HO1	150		95 -	1	●	
	200	Fiddle III 200i (4T)	14 -	1	●	
	200	HD Evo	07	1	●	
	200	HD Evo i	07 - 09	1	●	
GTS	300	Citycom i	08 - 14	2	●	●
TGB						
	50	101 R	04 - 09	1	●	
	50	202 Classic	03 - 09	1	●	
	50	Akros Tec	03 - 04	1	●	
	50	Delivery (Up to E/F no 609099)	04 - 06	1	●	

3041

Scooter	Maxi-scooter
SC	MSC

Dim. / Size
58.8 mm
44.5 mm
9.5 mm

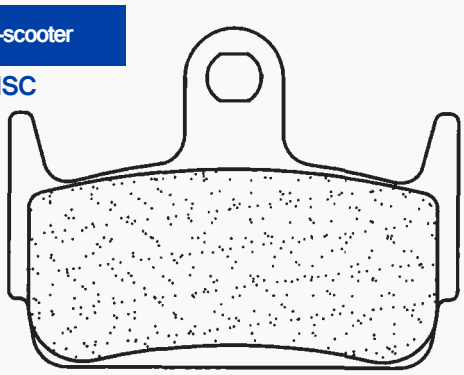

HONDA				
SZX	50	X8R-S / X8R-X	98 -	●
KYMCO				
DD	50	Sniper	94 -	●
	150	Heroism	95 -	●
SYM				
	50	Jet Sport X SR	06 -	●

3043

Scooter	Maxi-scooter
SC	MSC

Dim. / Size
35.5 mm
49 mm
6.9 mm

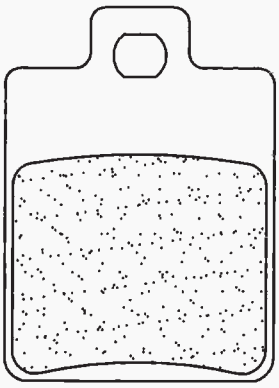

GILERA						
DNA	50	(Grimeca caliper)	00 -			●
DNA	50	(Hengtong caliper)	00 -			●
	50	Runner	98 - 05			●
	50	Runner PJ	06 -			●
	50	Runner SP	01 - 05			●
	50	Runner SP	06 -			●
	50	Stalker	97 -			●
	50	Stalker (Heng Tong Caliper)	03 - 11			●
FX	125	Runner/SP (Grimeca caliper)	00 -			●
FX	125	Runner/SP (Hengtong caliper)	00 -			●
FXR	180	Runner/SP (Grimeca caliper)	00 -			●
FXR	180	Runner/SP (Hengtong caliper)	00 -			●
FX	200	Runner SP	98 -			●
	200	Stalker	97 -			●
RC	500	Fuoco ie	07 - 14	2	●	
PEUGEOT						
	125	Satelis II (Nissin caliper)	13 -			●
PIAGGIO						
LX	50	(2T / 4T)	05 -	1	●	
S	50	(2T)	07 -	1	●	
S	50	(4T)	09 -	1	●	
NRG	50	Extreme	01 -			●
	50	Liberty	97 -	1	●	
	50	Liberty (4T)	00 -	1	●	
NRG	50	MC 2	98 - 02			●
	50	Zip Fast Rider	96 -	1	●	
	50	Zip RST	96 - 99	1	●	
	50	Zip SP / Disco	96 -	1	●	
ET2	50		97 - 01	1	●	
ET2	50		02 -	1	●	
ET4	50		00 -	1	●	
LE	125	Liberty / S	11 -	1	●	
LX	125	(4T)	05 -	1	●	
PIAGGIO						
S	125	(4T)	07 -	1	●	
LE	125	Liberty / S	98 - 10	1	●	
	125	MP3	06 - 08	2	●	
	125	MP3 Hybrid	09 - 10	2	●	
	125	MP3 ie	08 - 10	2	●	
	125	Sfera	95 -	1	●	
ET4	125	Vespa	96 -	1	●	
	125	Zip II (4T)	00 -	1	●	
PX	125		02 -	1	●	
	150	Liberty	99 - 09	1	●	
ET4	150		02 -	1	●	
PX	150		02 -	1	●	
	200	Liberty	06 -	1	●	
PX	200		02 -	1	●	
	250	LX 60	06 -	1	●	
	250	MP3 ie / LT	06 - 09	2	●	
	300	MP3 LT ie	10	2	●	
	300	MP3 LT Sport ie	13	2	●	
	300	MP3 Yourban	11 - 13	2	●	
	400	MP3 ie	07 -	2	●	
	400	MP3 LT	09 -	2	●	
	500	MP3 ie	09 - 10	2	●	
	500	MP3 ie	11 - 12	2	●	
	500	MP3 LT ie	11 - 13	2	●	
	500	MP3 Sport ie	11 - 12	2	●	
	500	MP3 Sport LT ie	11 - 13	2	●	
SACHS						
	125	Speedjet RS	10			●
	400	Quattrocento	08			●
VESPA						
ET2	50		97 - 05	1	●	
ET4	50		00 - 04	1	●	
LX	50	(2T / 4T)	13 - 14	1	●	
LXV	50		07 - 09	1	●	
	50	S (2T / 4T)	07 - 13	1	●	
	50	S Sport (2T / 4T)	07 - 13	1	●	
	50	Sprint (2T / 4T)	14 - 15	1	●	
	50	Sprint S (2T)	15 - 15	1	●	
LX	125	(4T)	05 - 13	1	●	
LX	125	(Serie Speciali 4T)	12 - 12	1	●	
LXV	125		07 - 12	1	●	
	125	S (4T)	07 - 13	1	●	
	125	S Sport	11 - 13	1	●	
ET4	150		99 - 05	1	●	
LX	150	(4T)	05 - 13	1	●	
LX	150	(Serie Speciali 4T)	12 - 12	1	●	
	150	S (4T)	07 - 12	1	●	
	150	S Sport (4T)	11 - 12	1	●	

1 - 2 = Nombre de jeux avant / Number of front sets / Anzahl Sets / Numero blister / Numero des juegos
L = Gauche / Left / Links / Sinistra / Izquierda - R = Droite / Right / Rechts / Destra / Derecha

Scooter Maxi-scooter

SC MSC

3045

Dim. / Size

31.5 mm
49 mm
7 mm

GILERA				
	50	Easy moving	96 -	1
	50	Typhoon	96 -	1
	125	Typhoon	96 -	1
PIAGGIO				
	25	Zip II Cat DT	01 -	1
	50	Free	93 - 96	1
	50	Sfera RST	95 -	1
	50	Storm	96 -	1
	50	Typhoon	96 -	1
	50	Zip II	01 -	1
	50	Zip II Cat DT	01 -	1
NTT	50		96 -	1
TPH	50		96 -	1
	80	Skipper	96 -	1
	80	Typhoon	96 -	1
	125	Hexagon	96 - 97	1
	125	Skipper	96 - 98	1
	125	Typhoon	96 -	1
TPH	125		96 -	1
	150	Hexagon	96 - 97	1

Scooter Maxi-scooter

SC MSC

Dim. / Size

60 mm
44 mm
9.2 mm

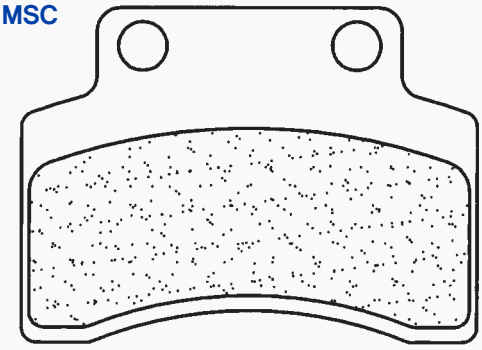

3047

CAGIVA				
	50	Nag	08 -	1
	125	Brillo	08 -	1
CPI				
	50	Aragon GP	06 -	1
	50	Freaky	07 -	1
	50	Hussar	03 -	1
	50	Olivier	03 -	1
	50	Popcorn	03 -	1
	125	Aragon GP	07 -	1
GENERIC				
	50	Ideo	06 -	1
	50	Roc	08 -	1
	50	Stroke	08 -	1
	50	XOR	06 -	1
	125	Soho	07 -	1
	125	Stroke	08 -	1
	125	XOR	07 -	1
	125	Zion	08 -	1
ITALJET				
SX1	50		08 -	1
KEEWAY				
	50	F-Act	07 -	1
	50	Flash Electric	10 -	1
	50	Focus	06 -	1
	50	Matrix	06 -	1
	50	Matrix Electric	10 -	1
	50	Matrix Racing Sport	10 -	1
F-NKD	50		10 -	1
RY8	50		07 - 09	1
RY8	50		10 -	1
	125	Focus	06 -	1
	125	Matrix	07 - 10	1
	125	Matrix Racing Sport	10 -	1
	150	Focus	06 -	1
	150	Matrix	06 -	1
	150	Matrix Racing Sport	10 -	1
KYMCO				
	50	Calypso	97 -	1
	50	Heroism	97 -	1
	125	Calypso	99 -	1
	125	Heroism	95 -	1
	150	Heroism	95 -	1
PEUGEOT				
SV	50	Executive	95 -	1
SV	80		95 -	1
		E-Vivacity (Electric)	10 -	1
RIEJU				
	50	Pacific (4T)	08	1
	50	Toreo (4T)	07 - 08	1
	125	Pacific (4T)	08	1
	125	Pacific Scooter	09	1
SACHS				
	50	49ER 12	08	1
	50	Speedforce	08	1
	50	Speedjet	08	1
	50	SX-1 (2T)	08 - 09	1
	125	Speedjet RS	10	1

Scooter Maxi-scooter

MSC

3049

Dim. / Size

44.8 mm
53.6 mm
8.7 mm

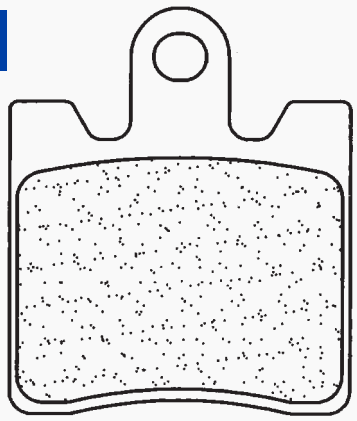

DAELIM				
	125	Otello	08 -	1
	125	S2 FI	07 -	1
	125	S3	10 - 11	1
	125	S3	12 - 14	1
	125	U3 FI	07 -	1
KAWASAKI				
SC	250	Epsilon	02	1
SUZUKI				
AN	250	Burgman / Skywave	98 - 03	1
AN	250	Burgman / Skywave	04 - 06	1
AN	400	Burgman / Skywave	99 - 00	1
AN	400	Burgman / Skywave	01 - 06	1
SYM				
GT	500		04 -	2

1 - 2 = Nombre de jeux avant / Number of front sets / Anzahl Sets / Numero blister / Numero des juegos
L = Gauche / Left / Links / Sinistra / Izquierda - R = Droite / Right / Rechts / Destra / Derecha

3051

Scooter	Maxi-scooter
SC	MSC

Dim. / Size
99.2 mm
39.7 mm
7.5 mm

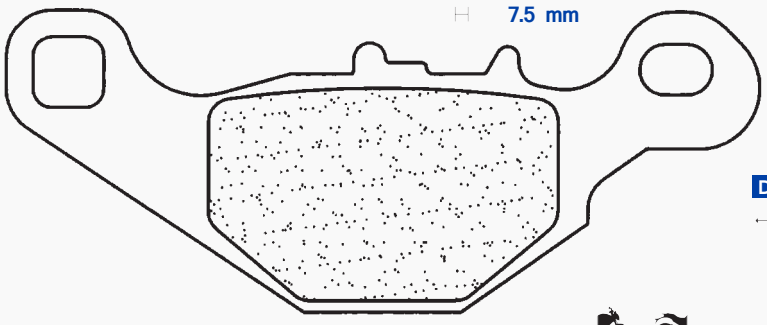

Dim. / Size
75.7 mm
40.6 mm
8.2 mm

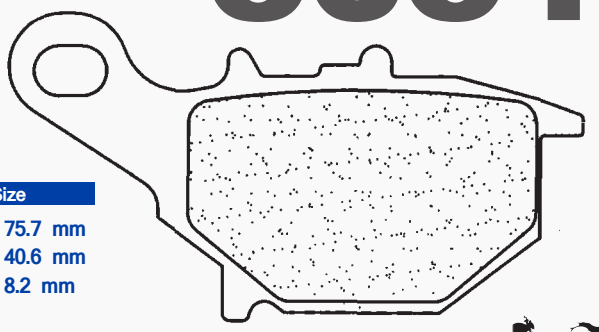

SUZUKI					
AN	50		95	1	●
AZ	50	RY / RK2	00 - 02	1	●
TR	50	Street Magic	98 -	1	●
UG	110	W/SW/Y/SY/SK1 Hokuto/Address	98 - 02	1	●
UZ	125	(CF46A) V125G	05 -	1	●
UC	125	Epicuro	99 - 02	1	●

SUZUKI					
AN	125	R / Vecstar	94 -	1	●
AN	125	S / T / V / W / X	95 - 00	1	●
AN	150		98 -	1	●
UC	150	Epicuro	99 -	1	●
AN	250	Vecstar	94 -	1	●

3053

Scooter	Maxi-scooter
SC	MSC

Dim. / Size
31.5 mm
51 mm
5.5 mm

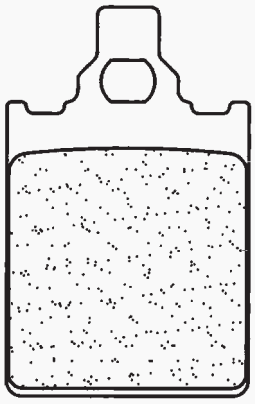

APRILIA					
	50	SR Replica	94 -	1	●
PIAGGIO					
	50	Quartz	92 -	1	●
	80	Skipper	93 - 95	1	●
	125	Skipper	93 - 95	1	●
PX	125		99 - 01	1	●
	150	Skipper	94 -	1	●
VESPA					
PX	125		98 - 06	1	●
PX	150		98 - 06	1	●
PX	200		98 - 07	1	●
LX60	125	(Special anniversary model)	06 - 06	1	●

3054

Scooter	Maxi-scooter
	MSC

Dim. / Size
55.4 mm
49.3 mm
7 mm

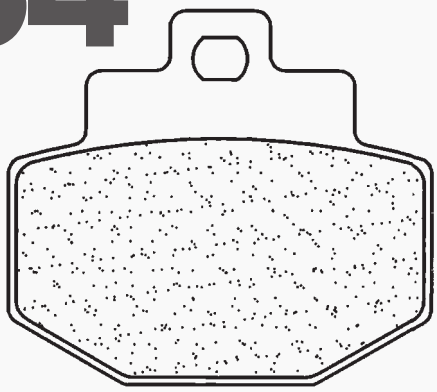

BENELLI				
	125	Adiva	00 -	●
	150	Adiva	00 -	●
GILERA				
ST	125	Runner	08 -	●
VX	125	Runner (4T) (Grimeca caliper)	01 -	●
VX	125	Runner (4T) (Hengtong caliper)	01 -	●
VXR	180	Runner (4T) (Grimeca caliper)	01 -	●
VXR	180	Runner (4T) (Hengtong caliper)	01 -	●
ST	200	Runner	08 -	●
VXR	200	Runner (4T) (Grimeca caliper)	01 -	●

GILERA				
VXR	200	Runner (4T) (Hengtong caliper)	01 -	●
PIAGGIO				
GT	125	L	04 -	●
GTX	125	Super Hexagon (Grimeca caliper) 11"	00 -	●
GTX	125	Super Hexagon (Hengtong caliper) 11"	00 -	●
GTX	125	Super Hexagon (Hengtong caliper) 12"	00 -	●
GTS	125		07 -	●
GTX	180	Super Hexagon (Grimeca caliper) 11"	00 -	●
GTX	180	Super Hexagon (Hengtong caliper) 11"	00 -	●
GTX	180	Super Hexagon (Hengtong caliper) 12"	01 -	●
GT	200	L	04 -	●
GTS	250	ABS	06 -	●
GTX	250	Super Hexagon	01 -	●
GTS	300	Super	09 -	●
VESPA				
	125	946 Special (4T 4V)	13 - 13	●
GT	125	Granturismo (Heng Tong caliper)	03 - 06	●
GT	125	Granturismo (Grimeca Caliper)	03 - 06	●
GTS	125		07 - 11	●
GTS	125	Super	10 - 13	●
GTS	125	Supersport	13 - 13	●
GTV	125		07 - 09	●
GT	200	L Granturismo (Grimeca Caliper)	03 - 06	●
GT	200	L Granturismo (Heng Tong Caliper)	03 - 06	●
GT60	250	(Special anniversary model)	06 - 06	●
GTS	250	ie ABS	05 - 11	●
GTV	250	ie	07 - 09	●
GTS	300		11 - 13	●
GTS	300	ie	08 - 12	●
GTS	300	Touring ie	11 - 13	●
GTS	300	Super	10 - 13	●
GTS	300	Supersport	10 - 13	●
GTV	300	(4T 4V)	10 - 13	●

1 - 2 = Nombre de jeux avant / Number of front sets / Anzahl Sets / Numero blister / Numero des juegos
L = Gauche / Left / Links / Sinistra / Izquierda - R = Droite / Right / Rechts / Destra / Derecha

Scooter Maxi-scooter

SC MSC

3055

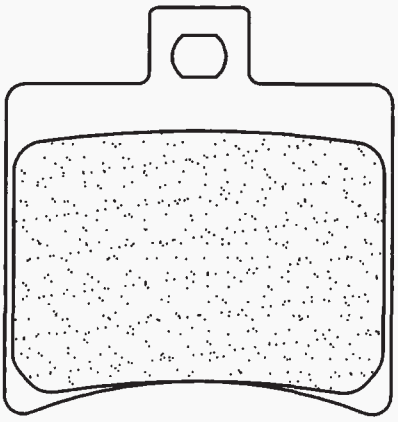

Dim. / Size

50.8 mm
53.5 mm
9.3 mm

APRILIA			
50	Scarabeo Ditech	02 -	●
50	SR Ditech / Racing	00 -	●
50	SR Street	05 -	●
125	Atlantic	03 -	●
125	Scarabeo / Scarabeo GT	99 - 03	●
125	Scarabeo / Scarabeo GT	04 -	●
125	Sportcity	05 -	●
150	Scarabeo	99 - 03	●
150	Scarabeo	04 -	●
200	Atlantic	03 -	●

APRILIA				
200	Scarabeo	07 -		●
200	Scarabeo / Scarabeo GT	02 - 03		●
200	Scarabeo Class	10 -		●
200	Sportcity	05 -		●
250	Atlantic ie	07 -		●
250	Leonardo	99 - 01		●
250	Leonardo	02 -		●
250	Leonardo (Grimeca caliper)	99 -		●
250	Scarabeo / Scarabeo ie	06 -		●
250	Sportcity ie	07 -		●
300	Scarabeo Special	10 -		●
400	Scarabeo ie	07 -		●
500	Atlantic	02 - 05	L	●
500	Atlantic Sprint	06 -		●
500	Scarabeo	03 - 09	L	●
500	Scarabeo Class	10 -		●
BETA				
50	Eikon	04 -		●
125	Eikon	04 -		●
150	Eikon	04 -		●
MALAGUTI				
125	F-18	00 -		●
125	Madison	99 -		●
125	Phantom Max	04 -		●
150	Madison	99 -		●
180	Madison	02 -		●
200	Madison	03 -		●
200	Phantom Max	04 -		●
250	Madison ie	06 -		●
250	Madison RS	04 - 07		●
250	Madison S	99 - 03		●
250	Password	05 -		●
250	Phantom Max	04 - 08		●
400	Madison K	02 - 06		●
500	Spidermax GT	04 -		●
500	Spidermax RS	09 -		●
PEUGEOT				
50	Citystar	13 -		●
125	Citystar	11 -		●

Scooter Maxi-scooter

MSC

3056

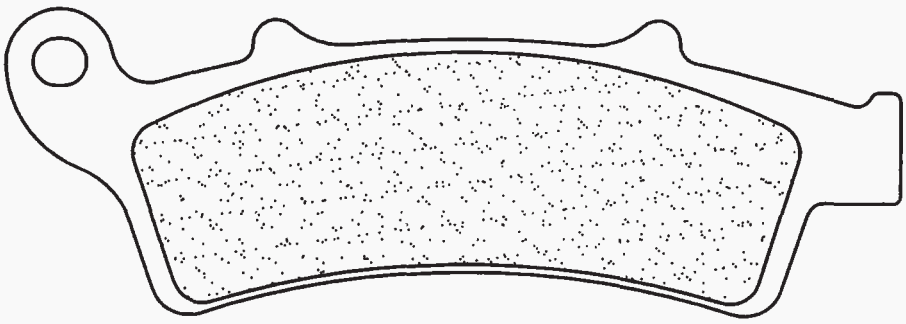

Dim. / Size

117.3 mm
40 mm
8.4 mm

APRILIA				
125	Atlantic	03 -	1	●
125	Scarabeo / Scarabeo GT	04 -	1	●
150	Scarabeo	04 -	1	●
200	Atlantic	03 -	1	●
200	Scarabeo	07 -	1	●
200	Scarabeo Class	10 -	1	●
250	Atlantic ie	07 -	1	●
250	Leonardo	02 -	1	●
250	Scarabeo / Scarabeo ie	06 -	1	●
APRILIA				
300	Scarabeo Special	10 -	1	●
500	Atlantic Sprint	06 -	1	●

KYMCO				
125	K-Xct i	13 -	1	●
125	X.Town i	16 -	1	●
300	K-Xct i	12 -	1	●
300	X.Town i	16 -	1	●
MALAGUTI				
250	Madison S	99 - 03	1	●
400	Madison K	02 - 06	1	●
PEUGEOT				
125	Looxor	03 - 08	1	●
150	Looxor	03 -	1	●

1 - 2 = Nombre de jeux avant / Number of front sets / Anzahl Sets / Numero blister / Numero des juegos
L = Gauche / Left / Links / Sinistra / Izquierda - R = Droite / Right / Rechts / Destra / Derecha

Scooter	Maxi-scooter
SC	MSC

3057

Dim. / Size
50.7 mm
53.8 mm
7.8 mm

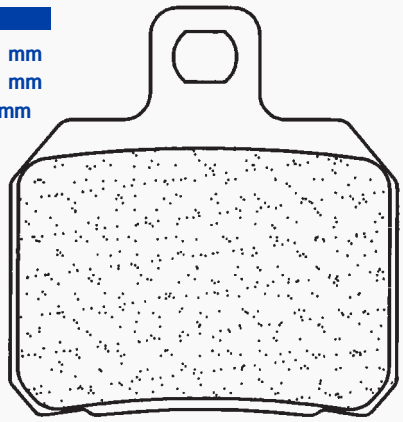

APRILIA					
	50	RS	06 - 1	●	
CPI					
	50	GTR	03 - 1	●	
	125	X-Large	02 - 2	●	●
	200	X-Large	02 - 2	●	●
DERBI					
GPR	50	Nude	05 - 1	●	
GPR	50	Racing	05 - 1	●	
GP1	50		05 - 1	●	
	125	GP1	05 - 1	●	
	250	GP1	05 - 1	●	
GILERA					
DNA	125	(Grimeca caliper)	01 -		●
DNA	125	(Hengtong caliper)	01 -		●
DNA	180	(Grimeca caliper)	01 -		●
DNA	180	(Hengtong caliper)	01 -		●
	500	Nexus	04 -		●
MALAGUTI					
NKD	50	Drakon	06 - 1	●	
MBK					
	125	Skycruiser	06 - 09		●
	125	Skycruiser	10 -		●
	125	Skyliner	01 - 10		●
	125	Thunder	01 - 03		●
	150	Skyliner	01 -		●
	150	Thunder	01 - 03		●
	180	Skyliner	04 -		●
PEUGEOT					
	50	Speedfight 3 Liquid Cooled	09 -		●
	50	Speedfight 3 RS	09 -		●
	125	Django Heritage (4T)	14 -		●
	125	Speedfight (4T)	14 -		●
	150	Django Heritage (4T)	14 -		●
PIAGGIO					
	125	X8	04		●
	125	X9	01 - 03 2	●	●
	125	X9	04 - 05 L		●
	125	X9 Evo (Brembo caliper)	03 - 04 2	●	●
	180	X9	02 - 2	●	●
	200	X8	04		●
	200	X9	03 - 2	●	●
PIAGGIO					
	250	X9	00 - 04 2	●	●
	400	Beverly Tourer	08 - 09 1	●	●
	500	Beverly	02 - 05 2	●	●
	500	Beverly	06 2	●	
	500	Beverly Cruiser	07 - 09 2	●	●
	500	X9	00 - 02 2	●	●
	500	X9 Evo	03 - 06		●
	500	X9 Evo ABS	04 -		●
BV	500		06 - 2	●	●
RIEJU					
MRT	50	Pro (Radial / Double single caliper)	09 - 10 1	●	
MRT	50	Supermotard (Radial caliper / Cast wheel)	09 - 10 1	●	
	50	Tango	07 - 10 1	●	
	125	Cityline ie	13 - 14		●
	300	Cityline ie	14 - 15		●
SUZUKI					
UH	125	Burgman	02 - 06		●
UH	150	Burgman	04 - 06		●
YAMAHA					
YP	125	BLACK X-Max	09 -		●
YP	125	Majesty	01 - 09		●
XQ	125	Maxster	01 - 03		●
YP	125	R X-Max	06 - 09		●
YP	125	R X-Max	11 - 17		●
VP	125	X-City	08 -		●
YP	150	Majesty	01 -		●
XQ	150	Maxter	01 -		●
YP	180	R Majesty	04 -		●

Scooter	Maxi-scooter
	MSC

Dim. / Size
102.1 mm
40.9 mm
10 mm

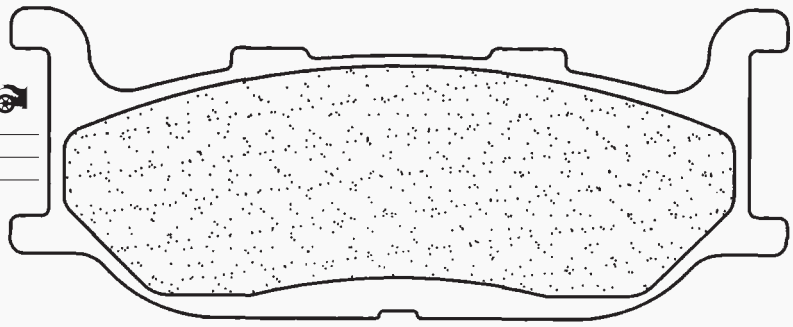

YAMAHA					
YP	400	Majesty	04 1	●	
XP	500	T-Max (N/P/R)	01 - 03 1	●	

3058

Scooter	Maxi-scooter
	MSC

Dim. / Size
102 mm
40 mm
9.8 mm

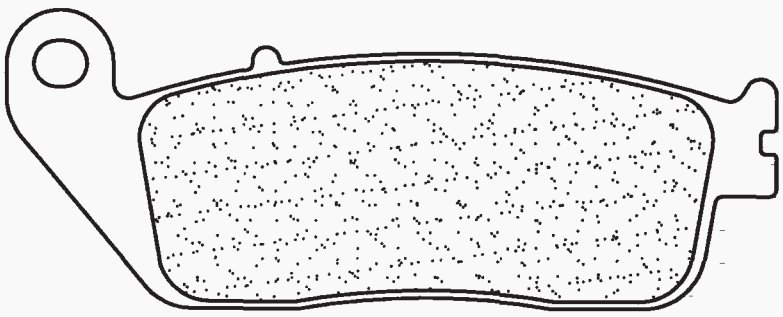

3059

1 - 2 = Nombre de jeux avant / Number of front sets / Anzahl Sets / Numero blister / Numero des juegos
L = Gauche / Left / Links / Sinistra / Izquierda - R = Droite / Right / Rechts / Destra / Derecha

3059 suite

Scooter Maxi-scooter

MSC

HONDA						
SH	125	i	14 -	1	●	
SH	150	i	14 -	1	●	
SWT	400	/ ABS	09 -			●
FJS	400	Silver Wing	06 - 08			●
FJS	400	Silver Wing T	09 -			●
FJS	600	Silver Wing / Silver Wing ABS	01 -			●
MBK						
	125	Cityliner	08 -	1	●	

YAMAHA						
VP	125	X-City	08 -	1	●	
YP	250	R X-Max	10 - 13	1	●	
YP	250	R X-Max (Heng Tong Caliper)	14 - 16	1	●	
YP	250	R X-Max ABS	10 - 13	1	●	
YP	250	R X-Max ABS	14 - 16	1	●	
VP	250	X-City	07 -	1	●	
XC	300	Versity	06 -	1	●	

3060

Scooter Maxi-scooter

SC MSC

Dim. / Size
76.9 mm
41 mm
9 mm

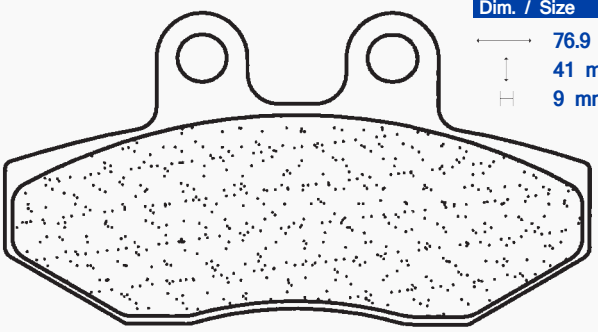

Dim. / Size
96.7 mm
41 mm
9 mm

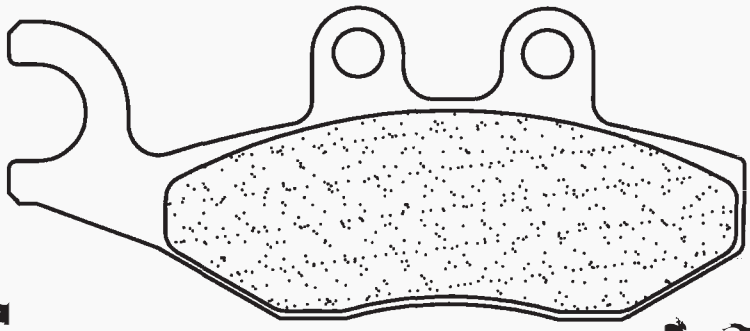

APRILIA						
	850	SRV	12 -			●
BETA						
RR	50	Enduro	99 -	1	●	
RR	50	Enduro	10 -	1	●	
RR	50	Enduro Alu	04 - 07	1	●	
RR	50	Motard Alu	04 -	1	●	
RR	50	Pro Race	98 -	1	●	
RR	50	Standard	99 -	1	●	
RR	50	Supermotard	99 - 03	1	●	
GILERA						
DNA	50	(Hengtong caliper)	00 -	1	●	
DNA	125	(Hengtong caliper)	01 -	1	●	
FX	125	Nexus	07 -	2	●	●
ST	125	Runner	08 -	1	●	
VX	125	Runner (4T) (Hengtong caliper)	01 -	1	●	
FX	125	Runner/SP (Hengtong caliper)	00 -	1	●	
DNA	180	(Hengtong caliper)	01 -	1	●	
VXR	180	Runner	01 -	1	●	
VXR	180	Runner (4T) (Hengtong caliper)	01 -	1	●	
FXR	180	Runner/SP (Hengtong caliper)	00 -	1	●	
ST	200	Runner	08 -	1	●	
VXR	200	Runner (4T) (Hengtong caliper)	01 -	1	●	
	250	Nexus	07 -	2	●	●
RC	500	Fuoco ie	07 - 14			●
GP	800		08 -			●
PEUGEOT						
	50	Citystar	13 -	1	●	
	125	Citystar	11 -	1	●	
	250	Satelis (Nissin caliper)	06 - 10			●
PIAGGIO						
	50	Fly	05 -	1	●	
	50	Typhoon (2T) 12" Wheels	10 - 13	1	●	
	100	Zip	07 -	1	●	
	125	Beverly (Hengtong caliper)	02 - 06	1	●	●
	125	Beverly / S	07 -	1	●	●
	125	Beverly Tourer	08 - 09	1	●	●
	125	Carnaby	07 - 09	1	●	●
	125	Fly	05 - 09	1	●	
GT	125	L	04 -	1	●	
GTX	125	Super Hexagon (Hengtong caliper) 11"	00 -	1	●	
GTX	125	Super Hexagon (Hengtong caliper) 12"	00 -	1	●	
	125	X10	12 -	1 L	●	
	125	X7	08 -	1	●	
	125	X8	04	2	●	
	125	X8	05 -	2	●	
	125	X9	04 - 05	1 L	●	
	125	X9 Evo (Hengtong caliper)	05 - 07	1 L	●	

PIAGGIO						
	125	Xevo	08 -	1	●	
GTS	125		07 -	1	●	
GTV	125		08 -	1	●	
	150	Fly	05 - 09	1	●	
	150	X8 Street	06 -	1	●	
GTX	180	Super Hexagon (Hengtong caliper) 11"	00 -	1	●	
GTX	180	Super Hexagon (Hengtong caliper) 12"	01 -	1	●	
	200	Beverly (Hengtong caliper)	02 - 06	1	●	●
	200	Carnaby	08 -	1	●	●
GT	200	L	04 -	2	●	
	200	X8	04	2	●	
	200	X8	05 -	2	●	
BV	200		02 - 04	1	●	●
BV	200		05 -	1	●	
GTS	250	ABS	06 -	1	●	
	250	Beverly	07 -	1	●	●
	250	GT 60	06 -	1	●	
	250	X7	08 -	1	●	
	250	X8	05 -	2	●	
	250	X9	05 -	1 L	●	
	250	Xevo	08 -	1	●	
BV	250		06 -	1	●	●
GTV	250		08 -	1	●	
	300	Beverly	07 -	1	●	
	300	Carnaby Cruiser	10 -	1	●	●
X7	300	ie	10 -	1	●	
GTS	300	Super	09 -	1	●	
	350	Beverly	14 -	1	●	
	350	X10	12 -	1 L	●	
	400	Beverly ie	07 -			●
	400	MP3 ie	07 -			●
	400	MP3 LT	09 -			●
	400	X8	07 -	1 L	●	●
	400	Xevo	08 -	1 L	●	●
	500	MP3 ie	09 - 10			●
	500	MP3 ie	11 - 12			●
	500	MP3 LT ie	11 - 13			●
	500	MP3	14 -			●
	500	MP3 Sport ie	11 - 12			●
	500	MP3 Sport LT ie	11 - 13			●
	500	MP3	14 -			●
	500	X10	12 -	1 L	●	
RIEJU						
	125	Cityline ie	13 - 14	1	●	
	300	Cityline ie	14 - 15	1	●	

1 - 2 = Nombre de jeux avant / Number of front sets / Anzahl Sets / Numero blister / Numero des juegos
L = Gauche / Left / Links / Sinistra / Izquierda - R = Droite / Right / Rechts / Destra / Derecha

3060 suite

Scooter — Maxi-scooter

SC — MSC

VESPA						
	50	Primavera (2T / 4T)	13 - 14	1	●	
	50	Touring (2T / 4T)	15 - 15	1	●	
	125	946 Special (4T 4V)	13 - 13	1	●	
	125	ET4	96 - 99	1	●	
	125	ET4	99 - 05	1	●	
GT	125	Granturismo (Heng Tong caliper)	03 - 06	1	●	
GTS	125		07 - 11	1	●	
GTS	125	Super	10 - 13	1	●	
GTS	125	Supersport	13 - 13	1	●	
GTV	125		07 - 09	1	●	
	125	Primavera (4T 4V)	13 - 14	1	●	
	125	Sprint	15 - 15	1	●	
	125	Sprint S (4T 3V ABS)	15 - 15	1	●	
	150	Primavera (4T 4V)	13 - 14	1	●	
	150	Sprint S (4T 3V ABS)	15 - 15	1	●	

VESPA					
GT	200	L Granturismo (Heng Tong caliper)	03 - 06	1	●
GT60	250	(Special anniversary model)	06 - 06	1	●
GTS	250	ie ABS	05 - 11	1	●
GTV	250	ie	07 - 09	1	●
GTS	300		11 - 13	1	●
GTS	300	ie	08 - 12	1	●
GTS	300	Touring ie	11 - 13	1	●
GTS	300	Super	10 - 13	1	●
GTS	300	Supersport	10 - 13	1	●
GTV	300	(4T 4V)	10 - 13	1	●

3061

Scooter — Maxi-scooter

MSC

Dim. / Size
100 mm
38.5 mm
11.8 mm

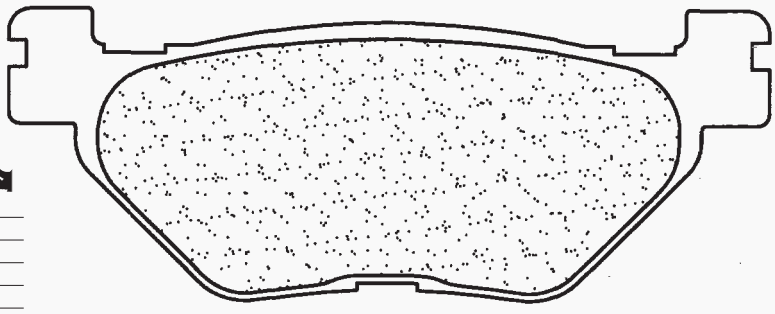

SYM				
GTS	250	Voyager	05	●
YAMAHA				
XP	500	T-Max (N/P/R)	01 - 03	●
XP	530	T-Max	12 -	●
XP	530	T-Max ABS	12 - 14	●
XP	530	T-Max ABS	15 - 16	●
XP	530	T-Max DX / SX	17 -	●

3062

Scooter — Maxi-scooter

SC — MSC

Dim. / Size
77 mm
42 mm
9 mm

Dim. / Size
96.6 mm
42 mm
9 mm

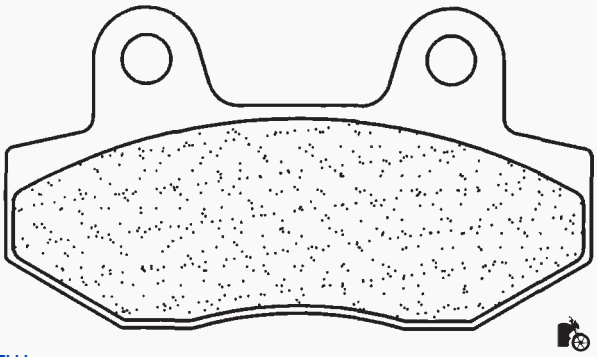

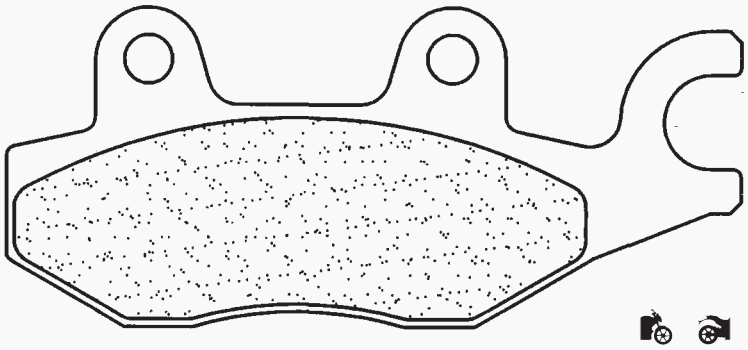

BENELLI						
	125	Caffenero	08 -	1 R	●	
	250	Caffenero	08 -	1 R	●	
DAELIM						
	125	S3	10 - 11			●
JONWAY						
YY	125		08 - 09	1	●	●
YY	150		08 - 09	1	●	●
YY	250	/ A	08 - 09	1	●	●
KYMCO						
	50	B&W	04 -	1	●	
	50	Dink / Dink Sport	99 -	1	●	
	50	New Dink	08 -	1	●	
	50	Spacer	99 -	1	●	
	50	Super 9 A/C	02 -	1	●	
	50	Super 9 L/C	02 -	1	●	
	50	Yager	01 -	1	●	
	100	Cobra Racer	99 -	1	●	
	125	B&W	99 -	1	●	●
	125	Dink	96 -	1	●	●
	125	Grand Dink	02 -	1	●	●

KYMCO						
	125	Movie	99 -	1	●	
	125	Movie XL	01 -	1	●	
	125	New Dink	08 -	1	●	●
	125	Spacer	99 -	1	●	●
	125	Techno GT	06 -	1	●	
	125	Yager	01 -	1	●	●
	125	Yager GT	09 -	1	●	
	150	B&W	01 -	1	●	●
	150	Dink	99 -	1	●	●
	150	Grand Dink	02 -	1	●	●
	150	Movie XL	01 -	1	●	
	150	Spacer	99 -	1	●	●
	150	Yager	01 -	1	●	●
	200	Dink	04 -	1	●	●
	200	i New Dink	08 -	1	●	●
	200	Like i	09			●
	200	Like i	10			●
	200	Yager	04 -	1	●	●
	250	B&W	01 -	1	●	●

1 - 2 = Nombre de jeux avant / Number of front sets / Anzahl Sets / Numero blister / Numero des juegos
L = Gauche / Left / Links / Sinistra / Izquierda - R = Droite / Right / Rechts / Destra / Derecha

3062 suite

Scooter — SC
Maxi-scooter — MSC

KYMCO							
	250	People	03 -	1		●	
S	250	People	06 -	1	R	●	
	250	Yup	03 -	1		●	●
	300	People Si	08 -	1	L	●	
FD	112	Shogun R	04 -	1		●	
SUZUKI							
FL	125	SD / Address / Underbone	07 - 10	1		●	
FX	125			1		●	
SYM							
	125	Euro MX (Euro 2)	06 - 09	1			●
	125	Shark R	00 - 02	1			●
RS	125		04 - 06	1			●
	150	Shark R	00 - 02	1			●
RS	150		05 -	1			●

3063

Scooter — SC
Maxi-scooter — MSC

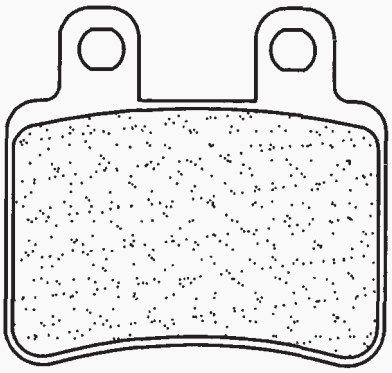

Dim. / Size
49.8 mm
47 mm
7 mm

ITALJET							
	50	Jet Set	03 -	1		●	
	100	Millenium	02 -	1		●	
	125	Jet Set	03 -	1		●	
	125	Millenium	02 -	1		●	
	150	Jet Set	03 -	1		●	
	150	Millenium	02 -	1		●	
MBK							
	50	X-Limit	04 -				●
	50	X-Limit Supermotard	04 -				●
PEUGEOT							
	50	Elystar	02 - 07				●
	125	Elyséo	03 -				●
	125	Elystar	03 -				●
	125	Geopolis	06 -				●
	125	Jet Force / Compressor	03 -				●
	125	Satelis	06 - 09				●
	125	Satelis Compressor	06 - 11				●
	125	Satelis RS	07 - 13				●
	150	Elyséo	01 -				●
	150	Elystar	03 -				●
	250	Geopolis (AJP caliper) / ABS	06 - 09				●
	250	Satelis (AJP caliper)	07 - 10				●
	400	Geopolis (AJP caliper)	07 - 10				●
	600	Satelis ABS	04 -				●
SHERCO							
	50	Enduro (2T) / Urban / SU (Spoke wheel model)	08 - 10				●
	50	SM 0.5 Black Panther	08 - 10				●
	50	SU (2T) Urban Base (Cast wheel model)	10 -				●
YAMAHA							
DT	50	R	04 -				●
DT	50	X Supermotard	04 -				●

3064

Scooter — SC
Maxi-scooter — MSC

APRILIA							
	50	Scarabeo (4T)	04 -	1		●	
	100	Scarabeo	00 -	1		●	
	100	Scarabeo (4T)	03 -	1		●	
	100	Scarabeo Net	10 -	1		●	
	125	Habana	01 -			●	
	125	Leonardo	99 -	1		●	●
	125	Leonardo (Grimeca caliper)	99 -				●
	125	Mojito / Mojito Custom	02 -	1		●	
	125	SR	99 -	1		●	
	150	Leonardo	99 -	1		●	●
	150	Leonardo (Grimeca caliper)	99 -				●
	150	SR	00 -	1		●	
	250	Leonardo	99 - 01	1		●	
	300	Leonardo (Grimeca caliper)	05 -				●

Dim. / Size
53.9 mm
50.7 mm
7.8 mm

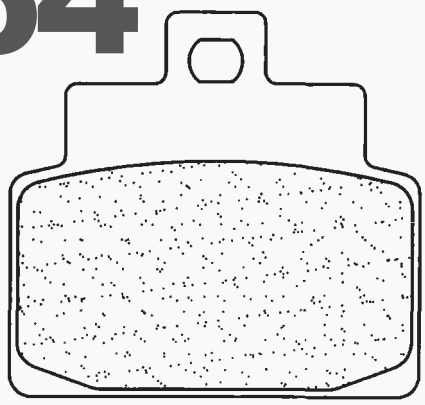

3065

Scooter — Maxi-scooter
MSC

Dim. / Size
102 mm
40 mm
8.5 mm

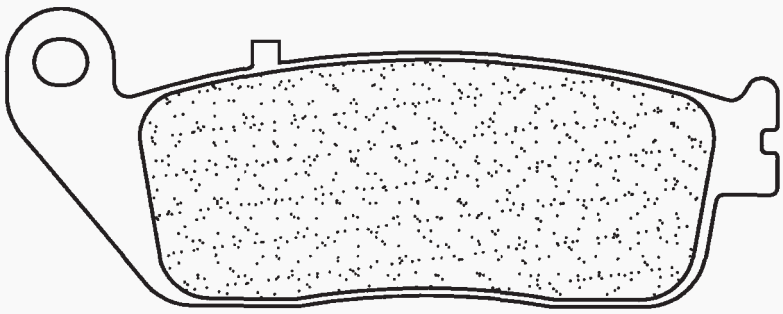

1 - 2 = Nombre de jeux avant / Number of front sets / Anzahl Sets / Numero blister / Numero des juegos
L = Gauche / Left / Links / Sinistra / Izquierda - R = Droite / Right / Rechts / Destra / Derecha

3065 suite

Scooter Maxi-scooter

MSC

DAELIM					
S2	125		05 -	1	●
S2	250	Free Wind	05 -	1	●
PEUGEOT					
	400	Geopolis RS	08 - 10	1	●
	400	Satelis	07 - 10	2	●
	400	Satelis (4T)	14	2	●
	500	Satelis	07 - 10	2	●
	600	Satelis ABS	04 -	1	●
SUZUKI					
AN	650	Burgman / Skywave	03 - 09	2	●
YAMAHA					
XC	125	R Majesty S	15 -	1	●

3066

Scooter Maxi-scooter

MSC

Dim. / Size

88 mm
46.1 mm
10 mm

WITH PIN FOR HAND BRAKE
AVEC PION POUR LE FREIN À MAIN

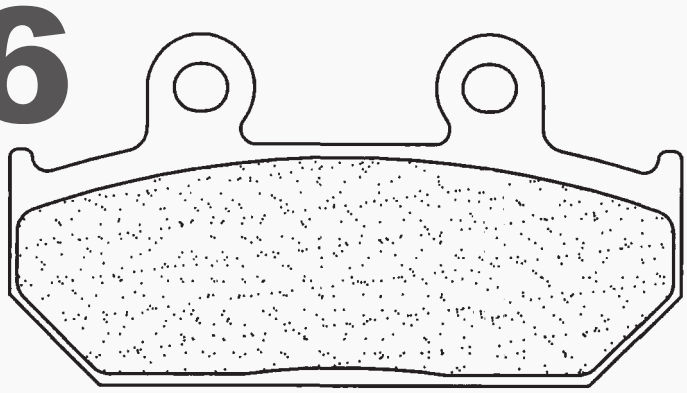

SUZUKI					
AN	250	Burgman / Skywave Type M / S / SS	07 - 08	L	●
AN	400	Burgman / Skywave	07 -	L	●
AN	650	Burgman / Skywave	03 - 09		●

3067

Scooter Maxi-scooter

SC MSC

Dim. / Size

70 mm
42 mm
8 mm

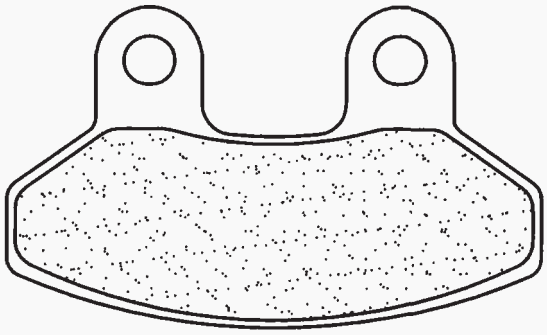

LAVERDA					
	125	Phoenix	01 -	1	●
	150	Phoenix	01 -	1	●
	200	Phoenix	01 -	1	●
	50	Shark	99 - 03	1	●
SYM					
RS	50		04 - 09	1	●
RS21	50		02 -	1	●
RS21	125	/ R	02 -	1	●
	125	Euro MX (Euro 1)	02 - 07	1	●
	125	Euro MX (Euro 2)	06 - 09	1	●
	125	Joyride	01 - 06	1	●
	125	Joyride Evo i	09 - 10	1	●
	125	Joyride i	07 - 09	1	●
	125	Shark	99 - 02	1	●
	125	Shark R	00 - 02	1	●
	125	SK	03 - 04	1	●
RS	125		04 - 06	1	●
VS	125		06 - 09	1	●
	150	Euro MX	03 -	1	●
	150	Joyride	01 - 06	1	●
	150	Shark	99 - 02	1	●
	150	Shark R	00 - 02	1	●
VS	150		06 - 08	1	●
RS	150		05 -	1	●
	200	Joyride	03 - 07	1	●
	200	Joyride Evo i	09 - 10	1	●
	200	Joyride i	07 - 09	1	●

3068

Scooter Maxi-scooter

SC MSC

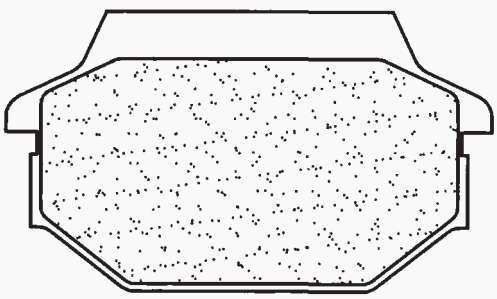

Dim. / Size

85 mm
43 mm
8.5 mm

Dim. / Size

64 mm
36.8 mm
11 mm

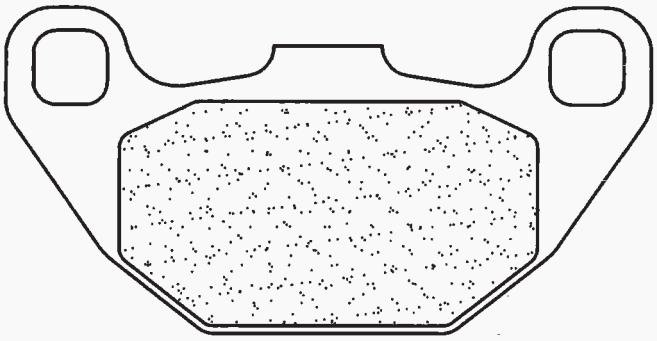

1 - 2 = Nombre de jeux avant / Number of front sets / Anzahl Sets / Numero blister / Numero des juegos
L = Gauche / Left / Links / Sinistra / Izquierda - R = Droite / Right / Rechts / Destra / Derecha

3068 suite

Scooter	Maxi-scooter
SC	MSC

KYMCO						
	50	Agility (4T) RT16	06 -	1	●	
	50	People	99 -	1	●	
	50	Super 8	08 -	1	●	
	50	Super 9 L/C	02 -			●
	125	Agility	14 -	1	●	
	125	People	01 -	1	●	
S	125	People	05 -	1	●	
	125	Super 8	08 -	1	●	
	125	Super 9	00 -			●
	150	People	01 -	1	●	
	200	Like i	09	1	●	
S	200	People	05 -	1	●	
	250	Super 9	00 -			●
LAVERDA						
	125	Phoenix	01 -			●
	150	Phoenix	01 -			●
	200	Phoenix	01 -			●
SYM						
	125	Joyride	01 - 06			●
	125	SK	03 - 04			●

SYM						
HD	125		04 - 07	1	●	
	150	Joyride	01 - 06			●
	200	HD	04 - 07	1	●	
	200	Joyride	03 - 07			●
GT	500		04 -			●

3069

Scooter	Maxi-scooter
SC	MSC

Dim. / Size

77 mm
42 mm
7.5 mm

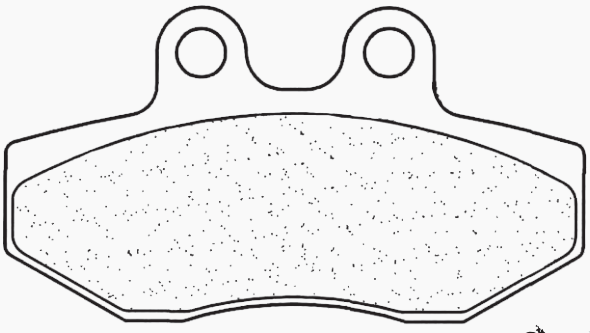

APRILIA						
	50	RX	06 -	1	●	
BUTALCO						
	50	Astro	01 -	1	●	
	50	Lobito	99 -	1	●	
DERBI						
GPR	50	R	98 - 04	1	●	
	50	Senda R DRD	03 - 04	1	●	
GAS GAS						
EC	50	Rookie	01 - 04	1	●	

GAS GAS						
SM	50	Rookie	01 -	1	●	
GILERA						
FX	125	Runner	97 - 99	1	●	
FX	150	Runner	97 -	1	●	
FXR	180	Runner	97	1	●	
FX	200	Runner	97 - 98	1	●	
HRD						
	50	Sonic 2 Supermotard	00 - 02	1	●	
	50	Sonic 2 Trail	00 - 02	1	●	
HUSQVARNA						
	50	SM	02 -	1	●	
	50	WR	02 -	1	●	
ITALJET						
SM	50		02 -	1	●	
MBK						
	125	Flame X	04 - 10	1	●	
MH (MOTORHISPANIA)						
RX	50	Racing	00 -	1	●	
RYZ	50	Supermotard	05 -	1	●	
PEUGEOT						
XR-6	50		02 - 07	1	●	
RIEJU						
MRX	50	Castrol	01 - 02	1	●	
RR	50	Castrol	00 - 02	1	●	
	50	Spike pro	04	1	●	
RS1	50		01 -	1	●	
SHERCO						
	50	Enduro (2T)	02 - 07	1	●	
	50	Enduro (2T) / Urban / SU (Spoke wheel model)	08 - 10	1	●	
	50	Supermotard (2T)	02 - 07	1	●	
SIAMOTO						
	125	BD / KD	02 -	1	●	
YAMAHA						
XC	125	Cygnus	96 - 03	1	●	

3070

Scooter	Maxi-scooter
	MSC

KYMCO						
	250	Grand Dink	01 -	1	●	
SYM						
GTS	125	Evo i	10 - 14	2	●	
GTS	250	Joymax	06	2	●	
GTS	250	Joymax i	07 - 09	1	●	
GTS	250	Voyager	05	2	●	
GTS	300	Joymax Evo i	09 -	2	●	
GTS	300		08 - 09	2	●	

Dim. / Size

45 mm
50.8 mm
7 mm

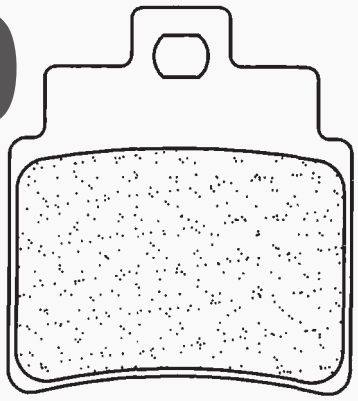

1 - 2 = Nombre de jeux avant / Number of front sets / Anzahl Sets / Numero blister / Numero des juegos
L = Gauche / Left / Links / Sinistra / Izquierda - R = Droite / Right / Rechts / Destra / Derecha

Scooter Maxi-scooter

MSC

3071

Dim. / Size
55.4 mm
46 mm
7 mm

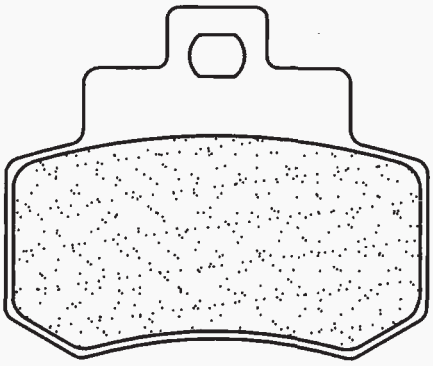

KYMCO				
	250	Grand Dink	01 -	●

Scooter Maxi-scooter

MSC

3072

Dim. / Size
79 mm
47.1 mm
7.4 mm

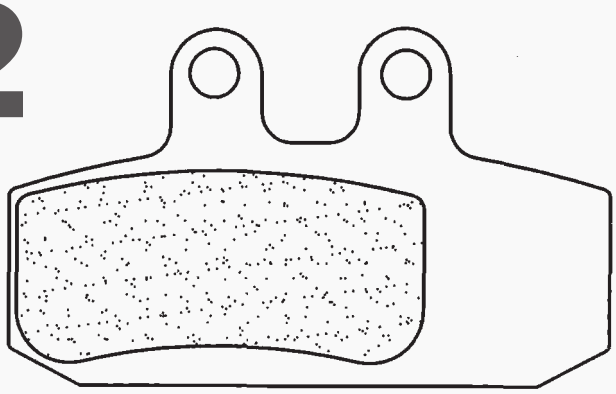

APRILIA					
	500	Atlantic	02 - 05	1 R	●
	500	Scarabeo	03 - 09	1 R	●

Scooter Maxi-scooter

MSC

3073

Dim. / Size
81.1 mm
42 mm
9.3 mm

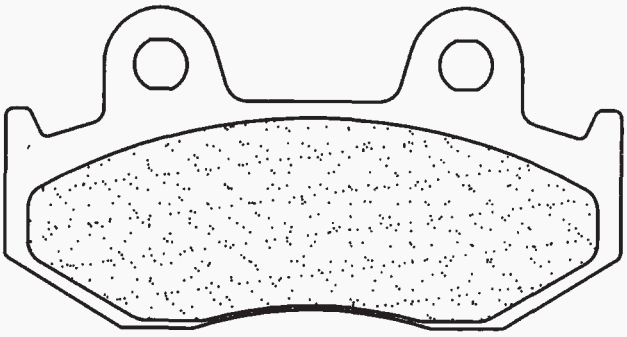

HONDA					
SCV	110	Lead	08 -	1	●
SES	125	Dylan	02 -	1	●
PS	125	i	07 -	1	●
CH	125	Spacy	94 -	1	●
SES	150	Dylan	02 -	1	●
PS	150	i	07 -	1	●
ITALJET					
	125	Torpedo	07 -	1	●
	150	Torpedo	07 -	1	●
MZ / MUZ					
	125	Mantizz S	05 - 07	1	●
SUZUKI					
AN	250	Burgman / Skywave	98 - 03		●
AN	400	Burgman / Skywave	99 - 00		●

Scooter Maxi-scooter

MSC

3074

Dim. / Size
81.1 mm
42 mm
8.5 mm

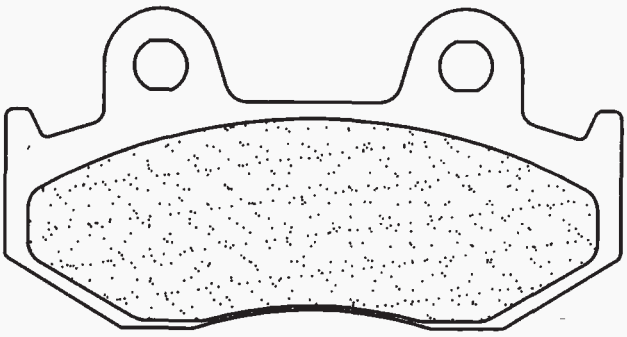

WITH PIN FOR HAND BRAKE
AVEC PION POUR LE FREIN À MAIN

KAWASAKI				
SC	250	Epsilon	02	●
SUZUKI				
AN	250	Burgman / Skywave	04 - 06	●
AN	400	Burgman / Skywave	01 - 06	●

1 - 2 = Nombre de jeux avant / Number of front sets / Anzahl Sets / Numero blister / Numero des juegos
L = Gauche / Left / Links / Sinistra / Izquierda - R = Droite / Right / Rechts / Destra / Derecha

Scooter Maxi-scooter

MSC

Dim. / Size
100 mm
37.3 mm
12 mm

3075

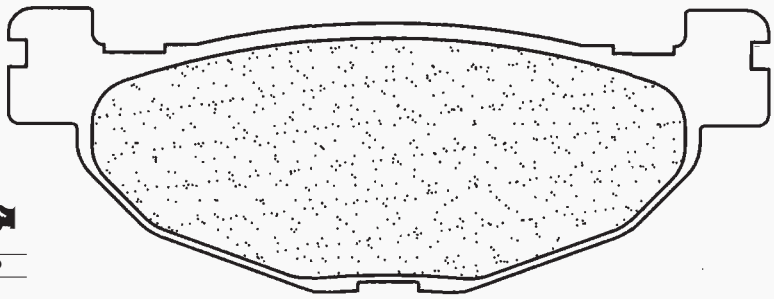

MBK				
	400	Skyliner	04 -	●
YAMAHA				
CP	250	Maxam / Morphus	05 - 08	●
YP	400	Majesty	04	●
YP	400	Majesty	05 -	●
XP	500	T-Max (4B5) (Pin for hand brake)	08 -	●
XP	500	T-Max (S/T/V) (Pin for hand brake)	04 - 07	●

WIN PIN FOR HAND BRAKE
AVEC PION POUR LE FREIN À MAIN

Scooter Maxi-scooter

MSC

3076

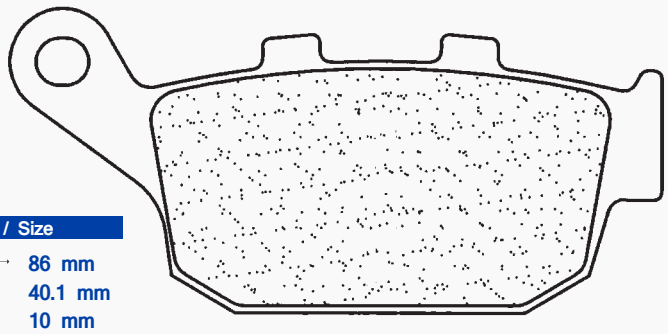

HONDA				
FES	125	Panthéon	03 -	●
FES	150	Panthéon	03 -	●
FES	250	Foresight	00 -	●
PEUGEOT				
SV	250		01 - 02	●

Dim. / Size
86 mm
40.1 mm
10 mm

Scooter Maxi-scooter

MSC

Dim. / Size
76.9 mm
41 mm
9 mm

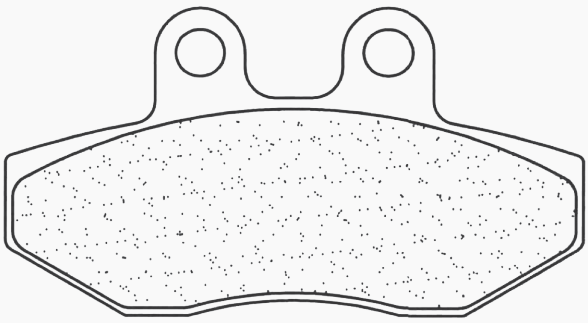

PIAGGIO						
	125	X10	12 -		L	●
	125	X10	12 -	1 R	●	
	125	X7	08 -			●
	125	X9	04 - 05	1 R	●	
	125	X9 Evo (Hengtong caliper)	05 - 07	1 R	●	
	125	Xevo	08 -			●
	250	MP3 ie / LT	06 - 09			●
	250	X7	08 -			●
	250	X9	05 -	1 R	●	
	250	Xevo	08 -			●
X7	300	ie	10 -			●
	300	MP3 LT ie	10			●
	300	MP3 LT Sport ie	13			●
	300	MP3 Yourban	11 - 13			●
	300	Beverly	07 -			●
	350	X10	12 -		L	●
	350	X10	12 -	1 R	●	
	400	X8	07 -	1 R	●	
	400	Xevo	08 -	1 R	●	
	500	X10	12 -		L	●
	500	X10	12 -	1 R	●	
	125	Medley / S	17 -			●
	350	Beverly	14 -			●
	350	MP3	14 -			●

Dim. / Size
96.7 mm
41 mm
9 mm

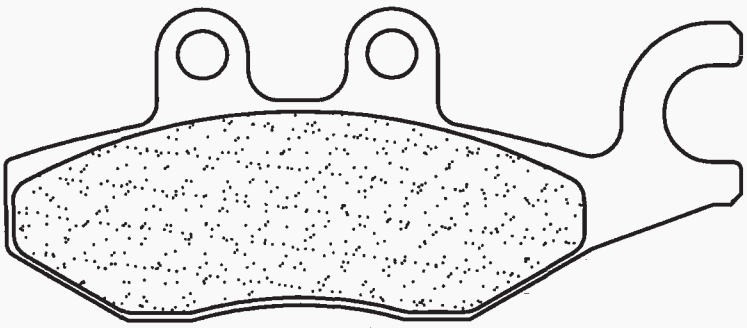

3077

1 - 2 = Nombre de jeux avant / Number of front sets / Anzahl Sets / Numero blister / Numero des juegos
L = Gauche / Left / Links / Sinistra / Izquierda - R = Droite / Right / Rechts / Destra / Derecha

Scooter Maxi-scooter

SC MSC

3078

Dim. / Size
96.6 mm
42 mm
9.2 mm

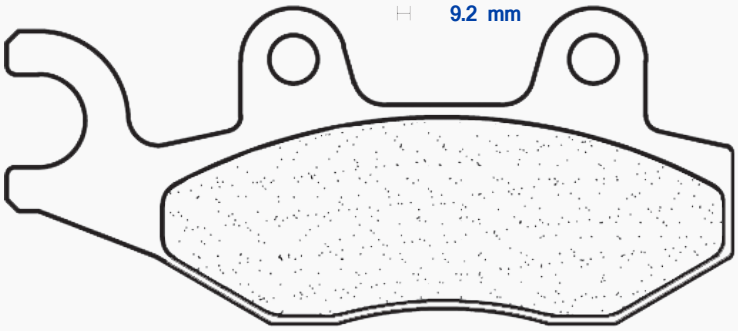

Dim. / Size
77 mm
42 mm
9.2 mm

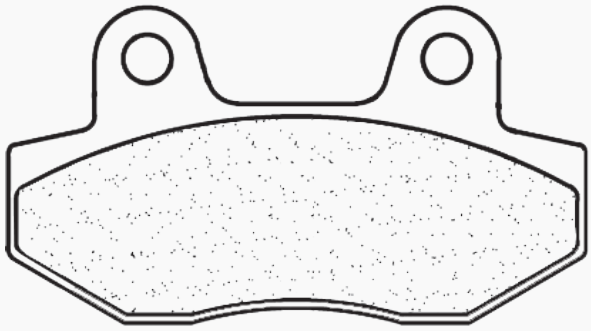

DAELIM						
	50	A-Four	06 -	1	●	
	125	Delfino	08 -	1	●	
KEEWAY						
	100	Partner	06 -	1	●	
	110	Partner	06 -	1	●	
	125	Outlook	07 - 10	1	●	●
KYMCO						
	50	Agility	05 -	1	●	
	50	Agility (4T) RT10 / RT12	06 -	1	●	
RS	50	Agility Naked	10 -	1	●	
	50	Filly LX	02 -	1	●	
	50	Jetix	10 -			●
	50	Vitality	04 -	1	●	
	50	Yup	02 -	1	●	
	125	Agility	06 -	1	●	
	125	Vivio	01 -	1	●	
	150	Vivio	01 -	1	●	
	200	Like i	10	1	●	
S	250	People	06 -	1 L	●	
	300	People Si	08 -	1 R	●	
MALAGUTI						
	125	Blog	10 -	1	●	
	125	Centro ie	08 -	1	●	
	160	Blog	10 -	1	●	
	160	Centro ie	08 -	1	●	
PEUGEOT						
	50	Django Allure (2T / 4T)	14 -	1	●	
	50	Django Evasion (2T / 4T)	14 -	1	●	
	50	Django Heritage (2T / 4T)	14 -	1	●	
DAELIM						
	50	A-Four	06 -	1	●	
	125	Delfino	08 -	1	●	
KEEWAY						
	100	Partner	06 -	1	●	
	110	Partner	06 -	1	●	
	125	Outlook	07 - 10	1	●	●
KYMCO						
	50	Agility	05 -	1	●	
	50	Agility (4T) RT10 / RT12	06 -	1	●	
RS	50	Agility Naked	10 -	1	●	
	50	Filly LX	02 -	1	●	
	50	Jetix	10 -			●
	50	Vitality	04 -	1	●	
	50	Yup	02 -	1	●	

KYMCO						
	125	Agility	06 -	1	●	
	125	Vivio	01 -	1	●	
	150	Vivio	01 -	1	●	
	200	Like i	10	1	●	
S	250	People	06 -	1 L	●	
	300	People Si	08 -	1 R	●	
MALAGUTI						
	125	Blog	10 -	1	●	
	125	Centro ie	08 -	1	●	
	160	Blog	10 -	1	●	
	160	Centro ie	08 -	1	●	
PEUGEOT						
	50	Django Allure (2T / 4T)	14 -	1	●	
	50	Django Evasion (2T / 4T)	14 -	1	●	
	50	Django Heritage (2T / 4T)	14 -	1	●	
PEUGEOT						
	50	Django Sport (2T / 4T)	14 -	1	●	
	125	Geopolis RS	08 - 10	1	●	●
	125	Satelis (Nissin caliper)	08 - 09	1	●	●
	125	Vivacity (4T)	10 -	1	●	
	250	Geopolis (Nissin caliper) / ABS	06 - 09	1	●	●
	250	Satelis (Nissin caliper)	06 - 10	1	●	
	300	Geopolis	10 -	1	●	●
	300	Geopolis 300 GT	14 -			●
	300	Geostyle	10 -	1	●	●
	300	Satelis (4T)	13	1	●	●
	400	Geopolis (Nissin caliper) / ABS	07 - 10	1	●	●
	400	Geopolis RS	08 - 10			●
	400	Satelis	07 - 10			●
	400	Satelis (4T)	14			●
	500	Satelis	07 - 10			●
PGO						
	125	I-Charge Fuel injection	03 -	1	●	
TGB						
	50	203	05 -	1	●	
	50	Apollo	99 -	1	●	
	50	Fire,Sky	03 -	1	●	
	90	Apollo	99-	1	●	
	250	Dynasty	06 -	1	●	

Scooter Maxi-scooter

MSC

3079

Dim. / Size
86 mm
40.1 mm
8.9 mm

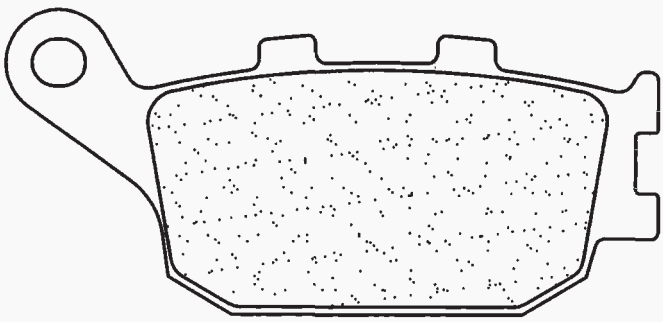

HONDA					
NSS	250	Forza	00 - 04		●
NSS	250	Jazz	01 - 04		●

1 - 2 = Nombre de jeux avant / Number of front sets / Anzahl Sets / Numero blister / Numero des juegos
L = Gauche / Left / Links / Sinistra / Izquierda - R = Droite / Right / Rechts / Destra / Derecha

Scooter Maxi-scooter

MSC

3080

Dim. / Size
111 mm
36.2 mm
7.6 mm

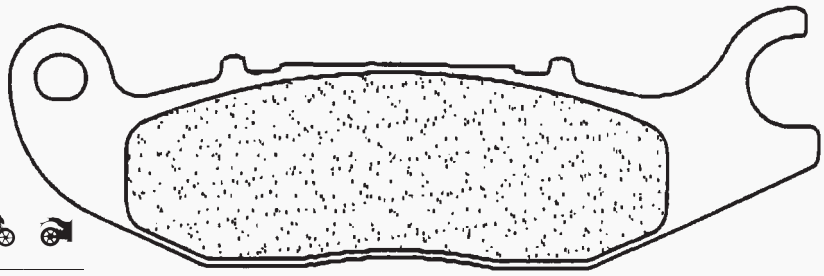

HONDA					
ANF	125	Innova	03 -	1	●
MSX	125		13 - 14	1	●
RIEJU					
RS2	50	FR	09 - 10	1	●
RS2	50	Matrix (J.Juan caliper)	07 - 09	1	●
	50	NKD	08 - 10	1	●
RS2	50	Pro (J.Juan caliper)	07 - 10	1	●

Dim. / Size
98.6 mm
33 mm
7.6 mm

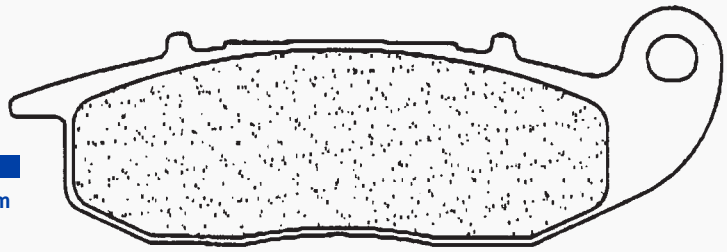

Scooter Maxi-scooter

SC MSC

3081

Dim. / Size
77 mm
42 mm
7.5 mm

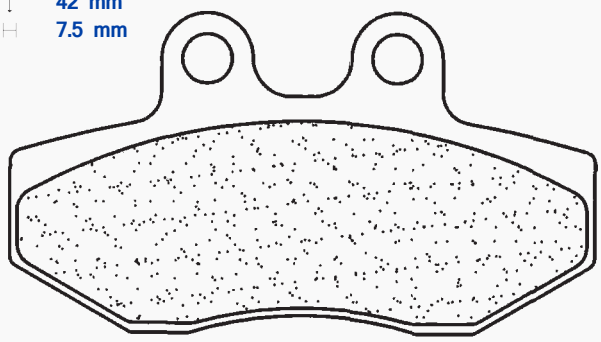

ITALJET					
	250	Jupiter	02 -		●
RIEJU					
RS2	50	Matrix (AJP caliper)	02 - 08	1	●
	50	NKD	07	1	●

Dim. / Size
94.5 mm
42 mm
7.5 mm

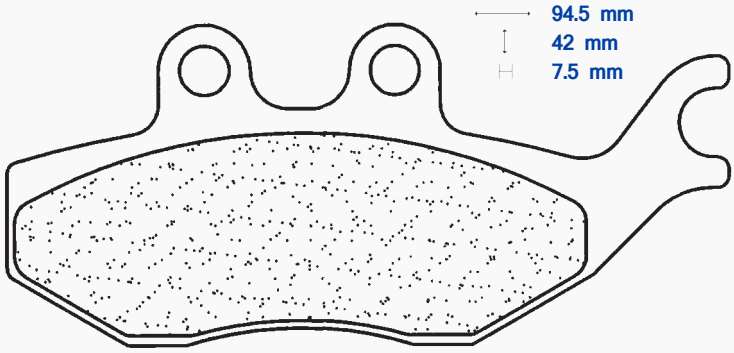

Scooter Maxi-scooter

MSC

3082

Dim. / Size
117.9 mm
45.4 mm
9 mm

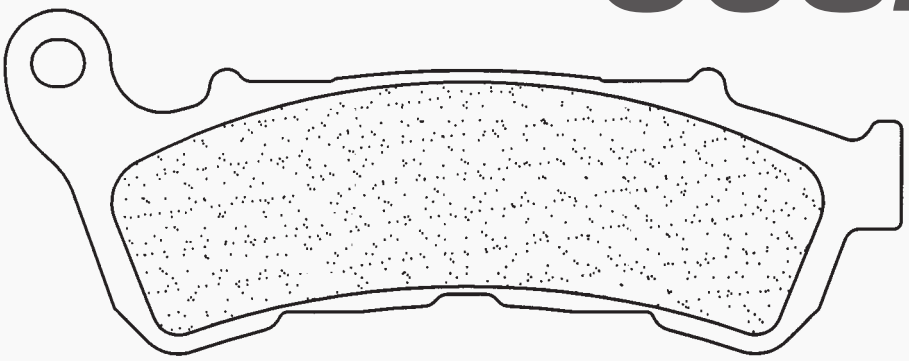

HONDA					
SH	125	i	09 - 14	1	●
FES	125	S-wing	07 -	1	●
SH	150	i	09 - 12	1	●
FES	150	S-wing	08 -	1	●
NSS	250	Forza	05 -	1	●
NSS	250	Jazz	05 -	1	●
PS	250		05 -	1	●
SH	300	i / i (ABS)	07 -	1	●
SWT	400	/ ABS	09 -	1	●

HONDA					
FJS	400	Silver Wing T	09-	1	●
SUZUKI					
UH	125	Burgman	07 - 13	1	●
UX	125	SIXteen	08 -	1	●
UX	150	SIXteen	08 -	1	●
UH	200	Burgman	07 -	1	●

1 - 2 = Nombre de jeux avant / Number of front sets / Anzahl Sets / Numero blister / Numero des juegos
L = Gauche / Left / Links / Sinistra / Izquierda - R = Droite / Right / Rechts / Destra / Derecha

Scooter Maxi-scooter

MSC

3083

HONDA				
SH	125	i	09 - 14	●
SH	125	i	14 -	●
FES	125	S-wing	07 -	●
SH	150	i	09 - 12	●
SH	150	i	14 -	●
FES	150	S-wing	08 -	●
NSS	250	Forza	05 -	●
NSS	250	Jazz	05 -	●
SH	300	i / i (ABS)	07 -	●

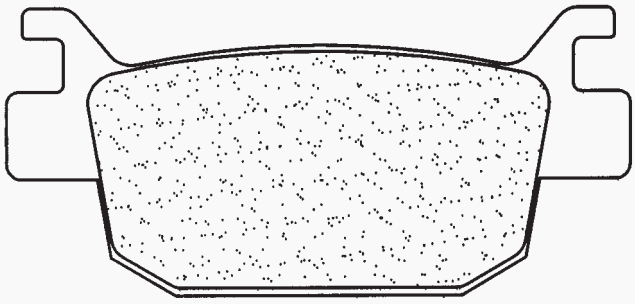

Dim. / Size

81.7 mm
37.9 mm
9.5 mm

Scooter Maxi-scooter

MSC

3084

PIAGGIO					
	125	MP3	06 - 08		●
	125	MP3 Hybrid	09 - 10		●
	125	MP3 ie	08 - 10		●
	125	X8	05 -		●
	125	X9 Evo (Hengtong caliper)	05 - 07	L	●
GTV	125		08 -		●
	200	X8	05 -		●
	250	X8	05 -		●
	250	X9	05 -	L	●
GTV	250		08 -		●
	500	Beverly	06		●

Dim. / Size

55.4 mm
54.5 mm
8 mm

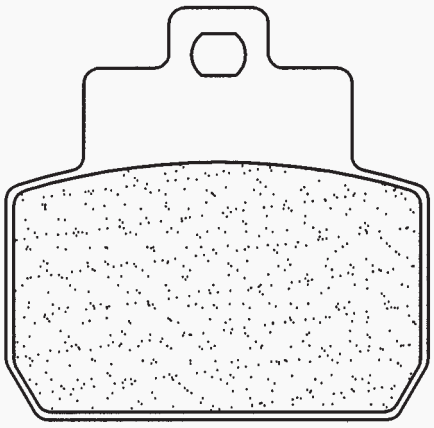

Scooter Maxi-scooter

MSC

3085

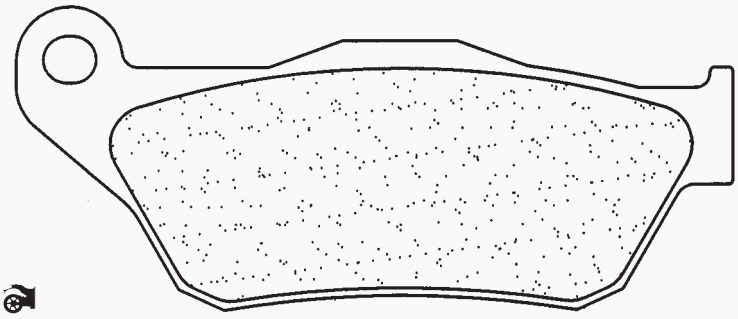

MBK					
	125	Skycruiser	06 - 09	1	●
YAMAHA					
YP	125	BLACK X-Max	09 -	1	●
YP	125	R X-Max	06 - 09	1	●
YP	250	R X-Max	05 - 09	1	●

Dim. / Size

94 mm
39.9 mm
7.3 mm

1 - 2 = Nombre de jeux avant / Number of front sets / Anzahl Sets / Numero blister / Numero des juegos
L = Gauche / Left / Links / Sinistra / Izquierda - R = Droite / Right / Rechts / Destra / Derecha

Scooter Maxi-scooter

MSC

3086

Dim. / Size
77 mm
42 mm
8 mm

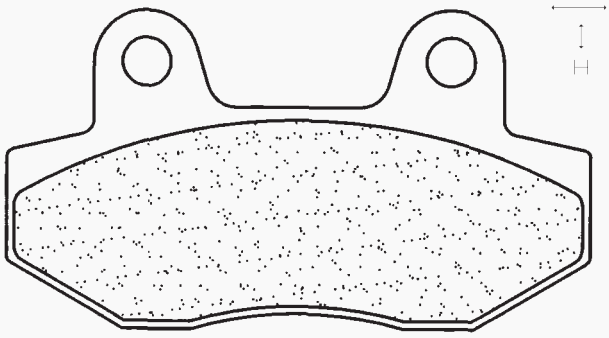

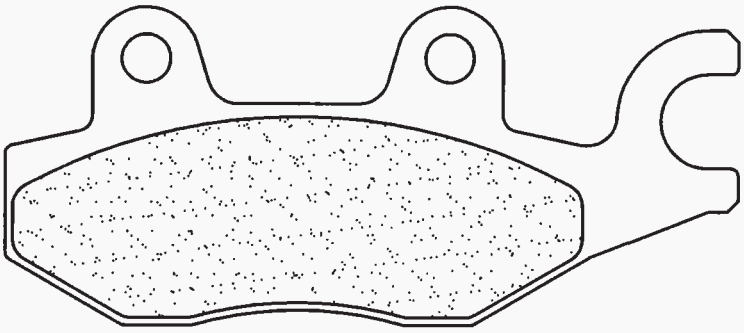

SUZUKI							
UH	125	Burgman	14 -	1		●	
UH	200	Burgman	14 -	1		●	
AN	250	Burgman / Skywave Type M / S / SS	07 - 08	1	R	●	
AN	400	Burgman / Skywave	07 -	1	R	●	
KYMCO							
	125	Agility	14 -				●

Dim. / Size
96.6 mm
42 mm
8 mm

Scooter Maxi-scooter

MSC

3087

Dim. / Size
96.6 mm
42 mm
8 mm

BENELLI							
	125	Caffenero	08 -	1	L	●	●
	125	Macis	10 -	1		●	●
	150	Macis	10 -	1		●	●
	250	Caffenero	08 -	1	L	●	●
PEUGEOT							
	400	Metropolis 13"	17 -				●
PGO							
	125	Libra	10 -	1		●	
	125	X Hot	10 -	1		●	
QUINGOI							
QM	125	GY	02 -	1		●	
SUZUKI							
AN	250	Burgman / Skywave Type M / S / SS	07 - 08	1	L	●	
AN	400	Burgman / Skywave	07 -	1	L	●	

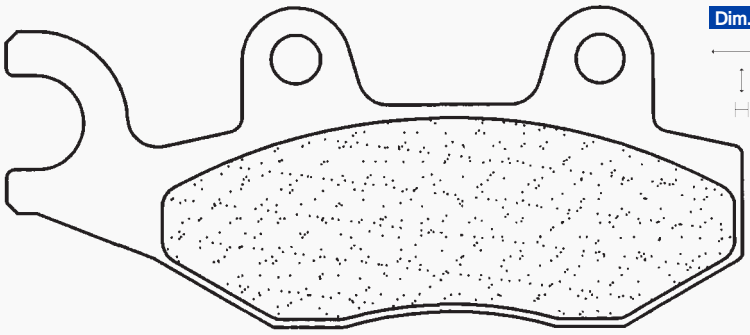

Dim. / Size
77 mm
42 mm
8 mm

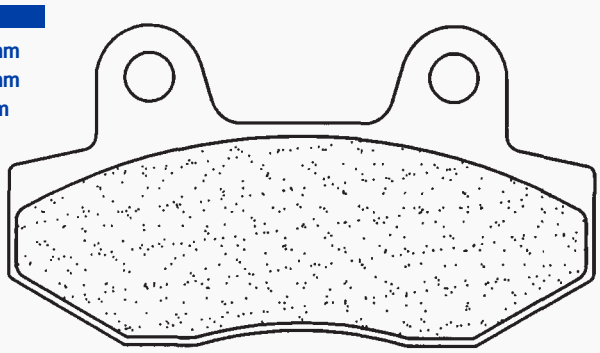

Scooter Maxi-scooter

MSC

YAMAHA							
YP	400	X-Max	13 -				●

3089

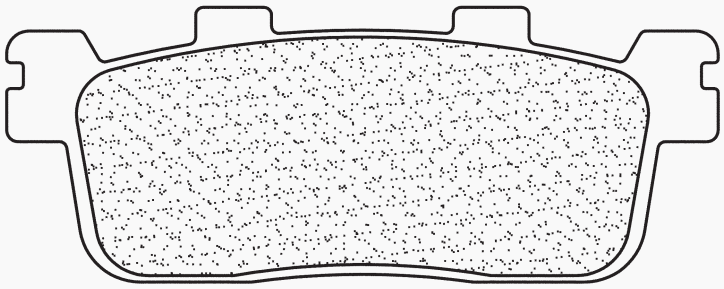

Dim. / Size
93.9 mm
36.2 mm
10.5 mm

1 - 2 = Nombre de jeux avant / Number of front sets / Anzahl Sets / Numero blister / Numero des juegos
L = Gauche / Left / Links / Sinistra / Izquierda - R = Droite / Right / Rechts / Destra / Derecha

Scooter Maxi-scooter

MSC

3090

Dim. / Size
62 mm
40.8 mm
10.2 mm

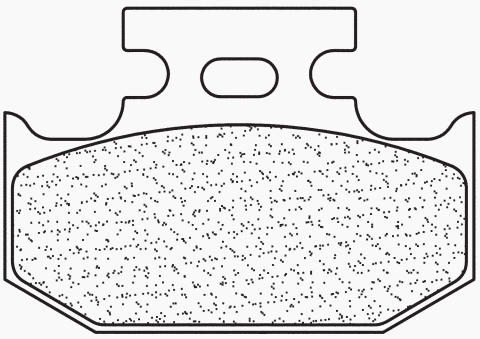

Dim. / Size
82 mm
40.8 mm
10.2 mm

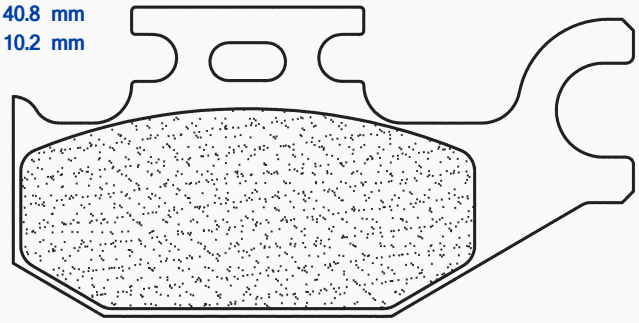

SUZUKI				
UH	125	Burgman	07 - 13	●
UH	125	Burgman	14 -	●
UX	125	SIXteen	08 -	●
UX	150	SIXteen	08 -	●
UH	200	Burgman	07 -	●
UH	200	Burgman	14 -	●

Scooter Maxi-scooter

MSC

3091

Dim. / Size
69.4 mm
50.8 mm
7 mm

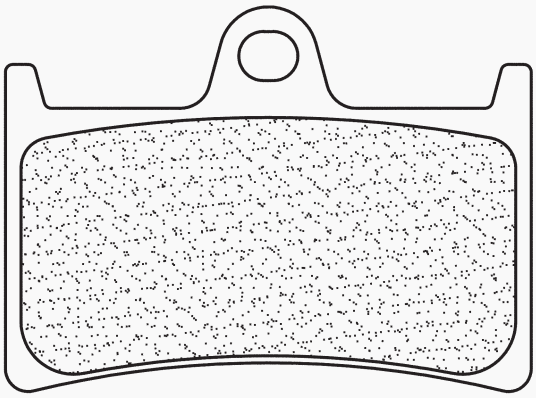

YAMAHA					
XP	500	T-Max (4B5) (Pin for hand brake)	08 -	2	●
XP	530	T-Max	12 -	2	●
XP	530	T-Max ABS	12 - 14	2	●
XP	530	T-Max ABS	15 - 16	2	●
XP	530	T-Max DX / SX	17 -	2	●

Scooter Maxi-scooter

MSC

3092

Dim. / Size
93.9 mm
36.2 mm
10.2 mm

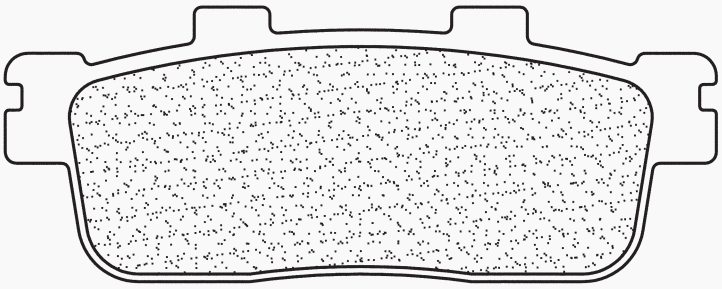

KYMCO						
S	125	People	05 -			●
S	200	People	05 -			●
S	250	People	06 -		R	●
	250	Xciting	06 -			●
	300	People Gti	10 -			●
	300	People Si	08 -		R	●
	300	Xciting Ri	08 -			●
	125	K-Xct i	13 -			●
	300	Gdink	12 -			●
	300	K-Xct i	12 -			●
PEUGEOT						
	125	LXR	10 - 12			●
	200	LXR	10 - 12			●
SYM						
	125	Citycom	08 -			●
HD	125	Evo i	07 - 10			●
GTS	125	Evo i	10 - 14			●
GTS	125	Joymax / Voyager	06 - 09	1	●	●

SYM				
	125	Joyride Evo i	09 - 10	●
	125	Joyride i	07 - 09	●
	200	HD Evo	07	●
	200	HD Evo i	07 - 09	●
	200	Joyride Evo i	09 - 10	●
	200	Joyride i	07 - 09	●
GTS	250	Joymax	06	●
GTS	250	Joymax i	07 - 09	●
GTS	300	Joymax Evo i	09 -	●
GTS	300		08 - 09	●
TGB				
	125	X-Motion	08 -	●
	250	X-Motion i	08 -	●
	300	X-Motion Efi	10 - 12	●

1 - 2 = Nombre de jeux avant / Number of front sets / Anzahl Sets / Numero blister / Numero des juegos
L = Gauche / Left / Links / Sinistra / Izquierda - R = Droite / Right / Rechts / Destra / Derecha

Scooter Maxi-scooter

MSC

3094

Dim. / Size
90 mm
33.4 mm
9.8 mm

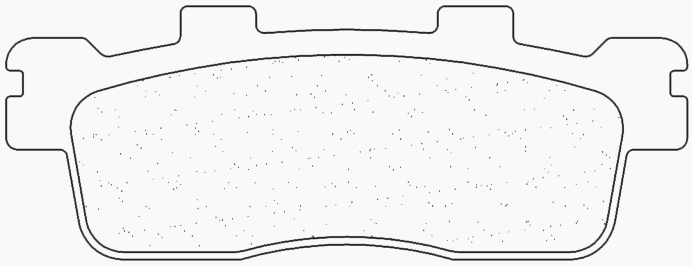

KYMCO				
	125	Dink Street	09 -	●
	125	Downtown i	10 -	●
	125	X.Town i	16 -	●
	200	Downtown i	10 -	●
KYMCO				
	300	Downtown i ABS	10 -	●
	300	X.Town i	16 -	●

Scooter Maxi-scooter

MSC

3095

Dim. / Size
99.8 mm
31 mm
9 mm

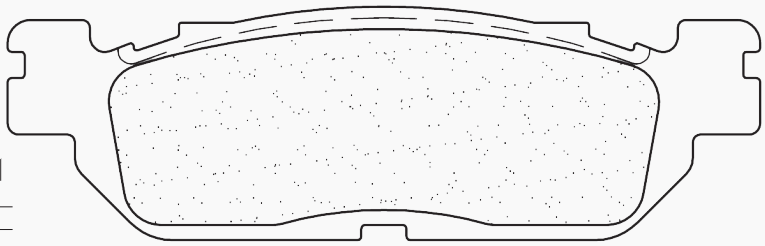

MBK				
	125	Skycruiser ABS	11 -	●
YAMAHA				
YP	125	R X-Max ABS	11 -	●
YP	250	R X-Max ABS	10 - 13	●
YP	250	R X-Max ABS	14 - 16	●

Scooter Maxi-scooter

SC MSC

3096

Dim. / Size
77 mm
42 mm
8 mm

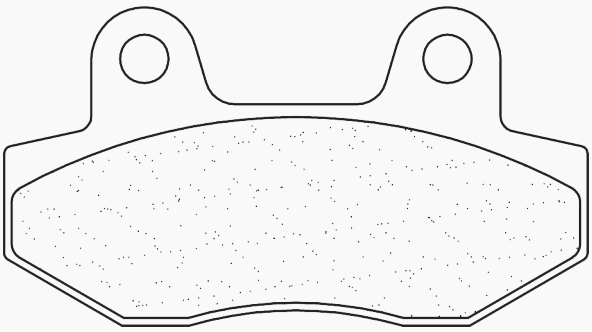

JONWAY						
YY	50	QT-10 Viper (2T / 4T)	07 - 09	1	●	
YY	50	QT-28 Raptor (2T / 4T)	07 - 09	1	●	
YY	50	QT-6 Agility (2T / 4T)	07 - 09	1	●	
YY	80	QT-6 Agility (4T)	07 - 09	1	●	
YY	150	T-19	08 - 09	1	●	●
YY	250	T-19	08 - 09	1	●	●
KEEWAY						
RY8	50		10 -			●
KYMCO						
	50	Active SR	08 -	1	●	
	50	Jetix	10 -	1	●	
	50	Nexxon	08 -	1	●	●
	100	Spike	00 - 06	1	●	
	110	Spike	00 - 06	1	●	
	125	Jetix	08 -	1	●	
	125	Nexxon	07 -	1	●	●
	125	Spike	02 -	1	●	
	150	Straight	08 -	1	●	●
PEUGEOT						
	50	Speedfight 3 Air Cooled	09 -	1	●	
	50	Speedfight 3 Liquid Cooled	09 -	1	●	
	50	Speedfight 3 RS	09 -	1	●	
	125	Speedfight (4T)	14 -	1	●	
SACHS						
	50	Madass (2T / 4T)	04 - 05	1	●	
	50	Madass (4T)	06 - 09	1	●	

Scooter Maxi-scooter

MSC

Dim. / Size
101.9 mm
39.2 mm
10.5 mm

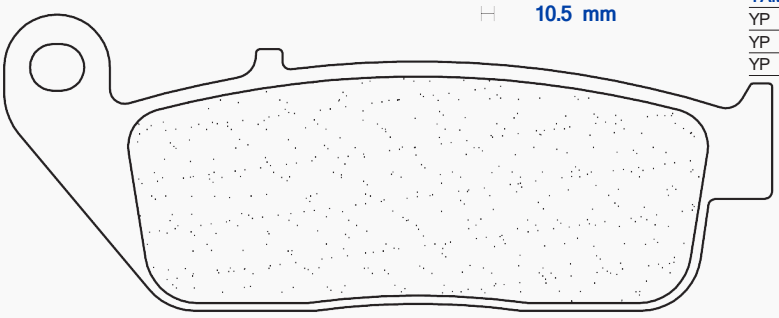

MBK						
	125	Skycruiser	10 -	1	●	
	125	Skycruiser ABS	11 -	1	●	
YAMAHA						
YP	125	R X-Max	10 -	1	●	
YP	125	R X-Max ABS	11 - 17	1	●	
YP	400	X-Max	13 -	2	●	

3097

1 - 2 = Nombre de jeux avant / Number of front sets / Anzahl Sets / Numero blister / Numero des juegos
L = Gauche / Left / Links / Sinistra / Izquierda - R = Droite / Right / Rechts / Destra / Derecha

Scooter Maxi-scooter

MSC

3098

MBK					
	125	X-Over	10 -	1	●
YAMAHA					
HW	125	Xenter	12 -	1	●
YW	125	Z (BW'S 125)	10 -	1	●

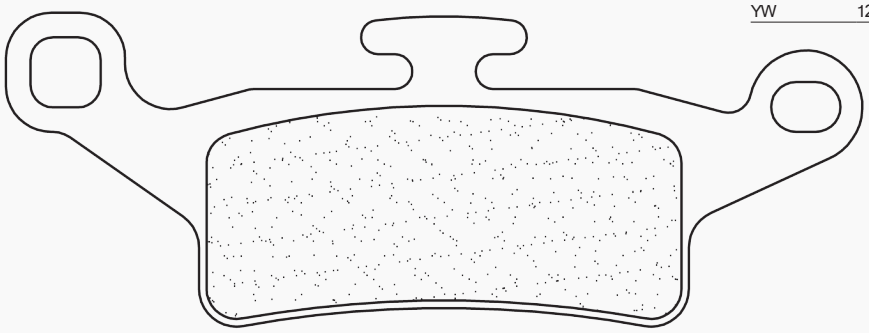

Dim. / Size
113.6 mm
41.6 mm
9 mm

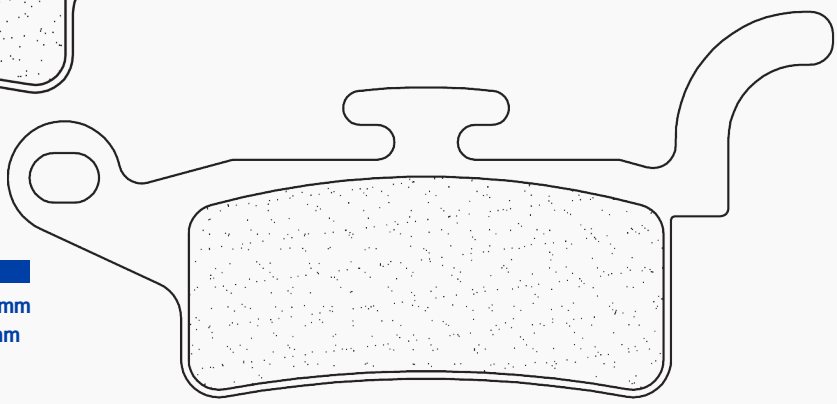

Dim. / Size
109.5 mm
51.1 mm
9 mm

Scooter Maxi-scooter

MSC

3099

MBK					
	125	Ocito	15 -	1	●
	125	Waap	08 -	1	●
YAMAHA					
XC	115	S D'elight	14 -	1	●
	125	NMAX	15 -	1	●
XC	125	Vity	08 -	1	●

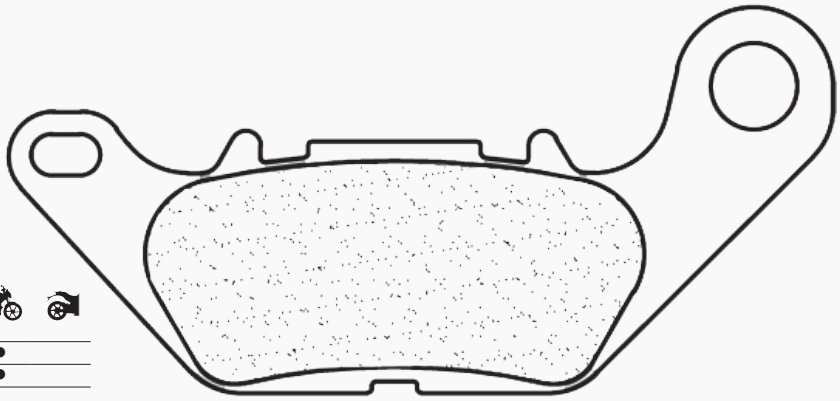

Dim. / Size
109.9 mm
51.4 mm
8.5 mm

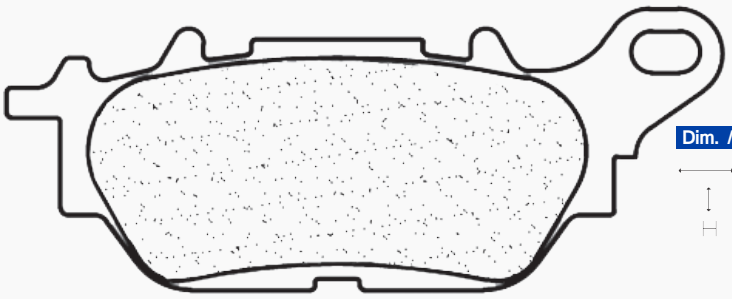

Dim. / Size
95.6 mm
37.5 mm
8.5 mm

Scooter Maxi-scooter

MSC

3100

Dim. / Size
97 mm
39.53 mm
7 mm

PEUGEOT					
	400	Metropolis 12"	13 -	2	●

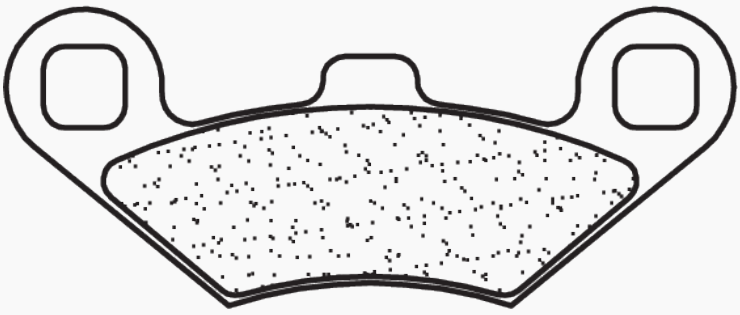

1 - 2 = Nombre de jeux avant / Number of front sets / Anzahl Sets / Numero blister / Numero des juegos
L = Gauche / Left / Links / Sinistra / Izquierda - R = Droite / Right / Rechts / Destra / Derecha

Scooter Maxi-scooter

SC MSC

HONDA					
NSC	50	Vision	10 -	1	●
NSC	110	Vision	10 -	1	●
SH	125	Mode	14 -	1	●
PCX	125		09 -	1	●
PEUGEOT					
	125	Django Allure (4T)	14 -	1	●
PEUGEOT					
	125	Django Evasion (4T)	14 -	1	●
	125	Django Sport (4T)	14 -	1	●
	125	Satelis II (Nissin caliper)	13 -	1	●
	150	Django Allure (4T)	14 -	1	●
	150	Django Evasion (4T)	14 -	1	●
	150	Django Sport (4T)	14 -	1	●

3102

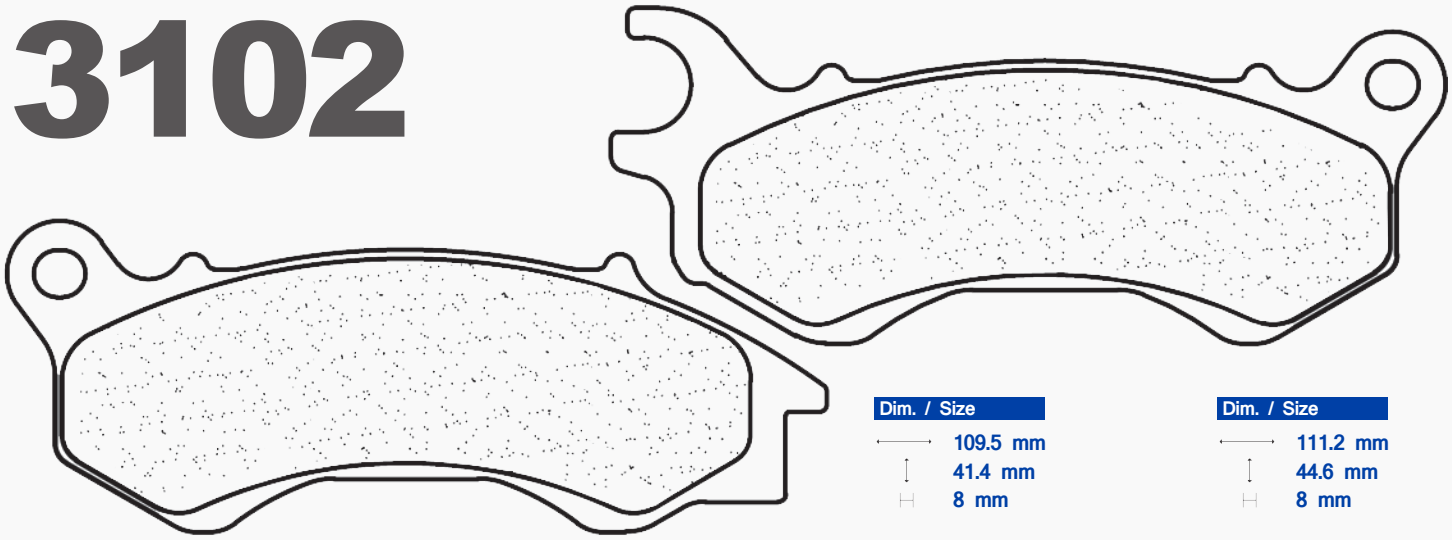

Dim. / Size
109.5 mm
41.4 mm
8 mm

Dim. / Size
111.2 mm
44.6 mm
8 mm

Scooter Maxi-scooter

MSC

PEUGEOT					
	400	Metropolis 12"	13 -		●

3105

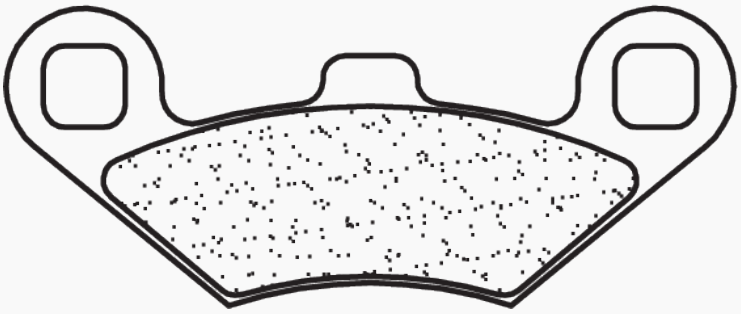

Dim. / Size
97 mm
39.53 mm
7 mm

Scooter Maxi-scooter

MSC

3106

MBK					
	125	Tryptik	14 -	1 L	●
YAMAHA					
	125	Tricity	14 -	1 L	●

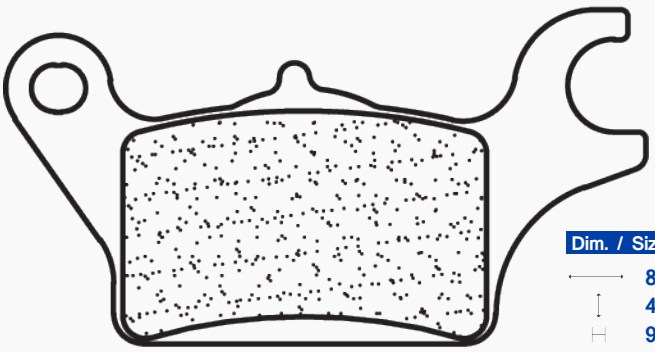

Dim. / Size
85.4 mm
44.5 mm
9 mm

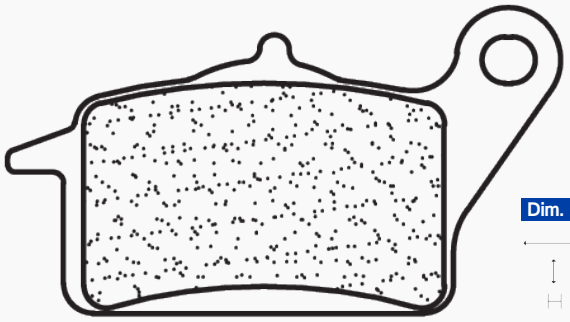

Dim. / Size
74.4 mm
41 mm
9 mm

1 - 2 = Nombre de jeux avant / Number of front sets / Anzahl Sets / Numero blister / Numero des juegos
L = Gauche / Left / Links / Sinistra / Izquierda - R = Droite / Right / Rechts / Destra / Derecha

Scooter Maxi-scooter

MSC

3107

MBK					
	125 Tryptik	14 -	1	R	●
YAMAHA					
	125 Tricity	14 -	1	R	●

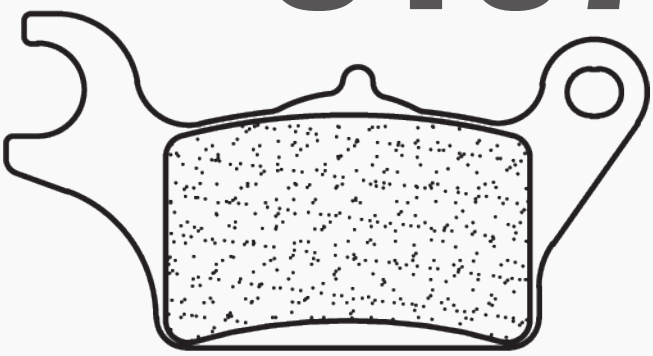

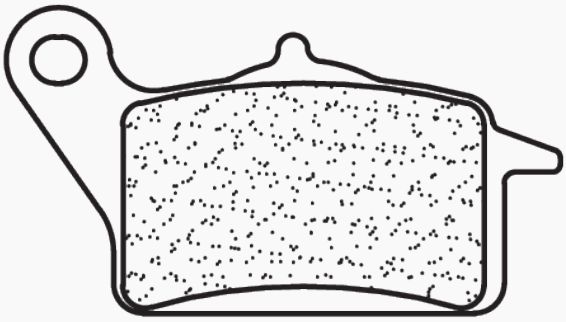

Dim. / Size

85.4 mm
44.5 mm
9 mm

Dim. / Size

74.4 mm
41 mm
9 mm

Scooter Maxi-scooter

MSC

3108

MBK				
	125 Tryptik	14 -	1	●
YAMAHA				
	125 Tricity	14 -	1	●

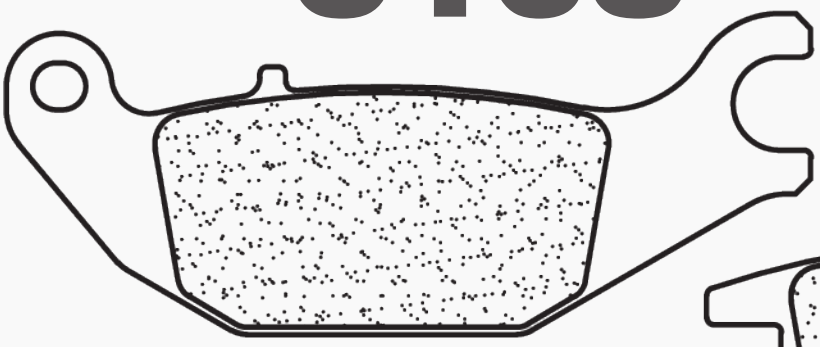

Dim. / Size

91.5 mm
40 mm
10 mm

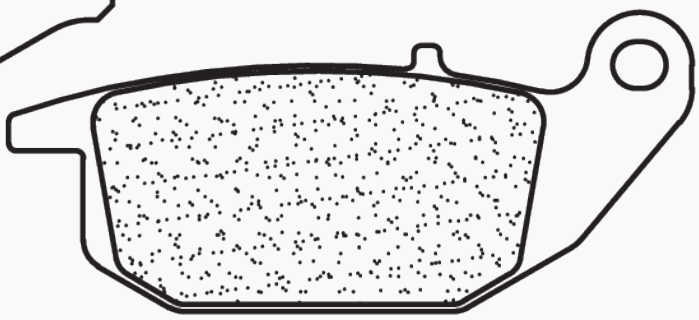

Dim. / Size

107.2 mm
42.7 mm
10 mm

Scooter Maxi-scooter

MSC

PIAGGIO				
	350 MP3	14 -	2	●
	500 MP3 LT ie (ABS)	14 -	2	●
	500 MP3	14 -	2	●

3109

Dim. / Size

55.4 mm
49.3 mm
7 mm

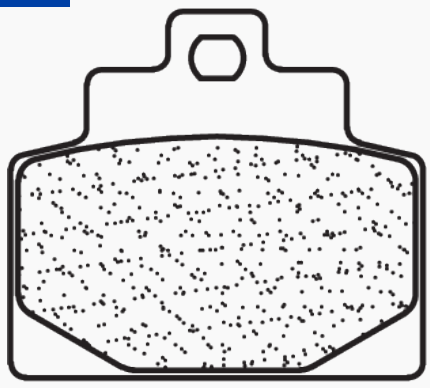

1 - 2 = Nombre de jeux avant / Number of front sets / Anzahl Sets / Numero blister / Numero des juegos
L = Gauche / Left / Links / Sinistra / Izquierda - R = Droite / Right / Rechts / Destra / Derecha

Scooter Maxi-scooter

MSC

3110

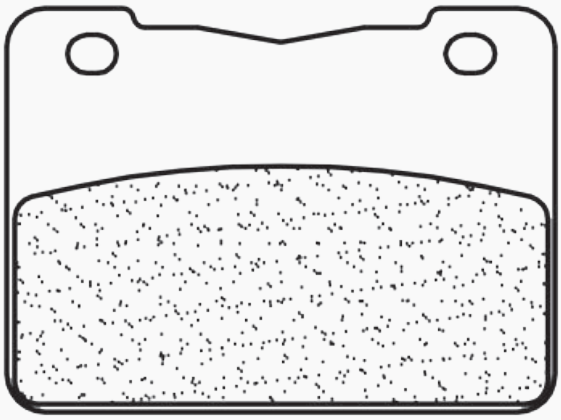

SYM			
400	Max Sym	11 - 15	●
600	Max Sym (ABS)	14 - 15	●

Dim. / Size

72.5 mm
53.3 mm
8 mm

Scooter Maxi-scooter

MSC

SYM			
400	Max Sym	11 - 15	●
600	Max Sym (ABS)	14 - 15	●

3111

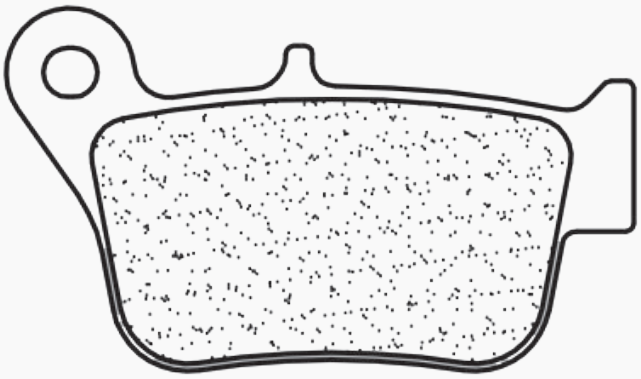

Dim. / Size

83 mm
48 mm
12 mm

Scooter Maxi-scooter

MSC

YAMAHA			
YP	125 R X-MAX (Heng Tong Caliper)	14	●
YP	250 R X-MAX (Heng Tong Caliper)	14 - 16	●

3112

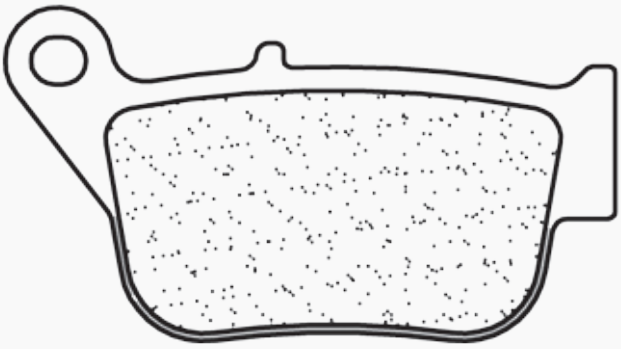

Dim. / Size

80 mm
43.7 mm
8.6 mm

1 - 2 = Nombre de jeux avant / Number of front sets / Anzahl Sets / Numero blister / Numero des juegos
L = Gauche / Left / Links / Sinistra / Izquierda - R = Droite / Right / Rechts / Destra / Derecha

Scooter Maxi-scooter

SC

3113

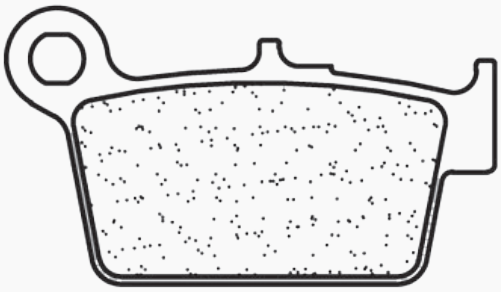

BETA

50	RR	Motard Standard	09 - 12	●
50	RR	Motard Skull	11	●
50	RR	Motard Track (Cast wheels)	08 - 14	●
50	RR	Motard Track (Spoke wheels)	14	●
50	RR	Motard Standard (5 spoke cast w.)	13 - 14	●
50	RR	Motard Sport (5 spoke cast w.)	14 - 15	●
50	RR	Motard (Spoke wheels)	09 - 13	●
50	RR	Motard	09 - 12	●
50	RR	Supermotard	08 -	●

Dim. / Size

65.6 mm
37 mm
7.8 mm

Tableau d'équivalences / Interchange list / Austauchliste / Tabella comparativa / Tablero de equivalencia

Street / Off-road / ATV / Scooter / Maxi-scooter

EBC	CL BRAKES	EBC	CL BRAKES	EBC	CL BRAKES	EBC	CL BRAKES	EBC	CL BRAKES
FA 016	**2950**	FA 119	**2424**	SFA 181	**3028**	SFA 256	**3072**	FA 357	**1078**
FA 018	**2332**	FA 120	**2801**	FA 182	**2309**	FA 257	**2408**	SFA 357	**3070**
FA 024/2	**2599**	FA 121	**2252**	FA 183	**2584**	SFA 257	**3038**	FA 363	**2900**
FA 030	**2814**	FA 123	**2253**	FA 185	**2300**	FA 258	**2750**	FA 366	**1145**
FA 031	**2814**	FA 123	**2305**	SFA 186	**3053**	SFA 260	**3043**	FA 367	**1103**
FA 034	**2847**	FA 124	**2310**	FA 187	**2245**	FA 261	**2602**	FA 367/2	**1244**
FA 047	**1167**	SFA 124	**3066**	FA 188	**2255**	FA 261/2	**1231**	FA 367/2	**3113**
FA 047	**2249**	FA 124/2	**2248**	FA 189	**2257**	SFA 261	**3026**	FA 368	**1108**
SFA 047	**3001**	FA 125	**2302**	FA 190	**2254**	FA 263	**2720**	FA 369/4	**1110**
FA 051	**2694**	FA 126	**2398**	FA 191	**2362**	SFA 264	**3039**	FA 373	**1140**
FA 054	**2408**	FA 128	**2799**	FA 192	**2381**	FA 265	**2711**	SFA 374	**3081**
SFA 054	**3018**	FA 129	**2304**	FA 193	**2307**	FA 266	**2827**	FA 375	**1148**
FA 060	**1089**	FA 131	**2314**	SFA 193	**3013**	SFA 266	**3057**	SFA 375	**3080**
SFA 060	**3037**	SFA 131/2	**3006**	FA 194	**1146**	FA 267	**2713**	FA 377	**1147**
FA 063	**2282**	SFA 131/3	**3014**	SFA 194	**3031**	SFA 268	**3027**	FA 379	**1133**
FA 067	**2306**	FA 132	**2399**	FA 196	**2313**	FA 270	**2925**	FA 380	**2361**
FA 067/2	**2466**	FA 134	**2400**	SFA 196	**3059**	FA 271	**2926**	FA 381	**1149**
SFA 067/2	**3012**	FA 135	**2288**	FA 197	**2326**	FA 272	**2922**	FA 387	**1150**
FA 069	**2289**	FA 136	**2392**	SFA 197	**3062**	FA 275	**2828**	FA 388	**1159**
SFA 069	**3011**	FA 137	**2328**	FA 197	**3086**	SFA 275	**3033**	SFA 388	**3082**
FA 069/2	**2382**	FA 140	**2298**	FA 199	**2546**	SFA 281	**3026**	FA 390	**1134**
SFA 069/2	**3017**	SFA 140	**3076**	SFA 199	**3025**	FA 283	**3049**	SFA 393	**3069**
FA 070	**2807**	FA 141	**2389**	FA 200	**2370**	FA 294	**2960**	FA 395	**1171**
FA 071	**2700**	FA 142	**2256**	FA 201	**2342**	SFA 298	**3055**	SFA 396	**3051**
FA 072	**2718**	SFA 142	**3003**	SFA 206	**3013**	FA 299	**2958**	FA 400	**1211**
FA 077	**2840**	SFA 142	**3065**	FA 208	**2353**	SFA 301	**3064**	FA 400	**2958**
FA 078	**2701**	FA 143	**2385**	FA 209	**2396**	FA 302	**1034**	FA 401	**1152**
FA 079	**2702**	FA 145	**2246**	FA 210	**2369**	FA 304	**2987**	SFA 408	**3075**
FA 081	**2802**	FA 145	**2961**	FA 213	**2353**	FA 305	**1123**	FA 409	**1172**
FA 083	**2469**	FA 146	**2281**	FA 214	**2288**	SFA 305	**3068**	SFA 411	**3074**
SFA 083	**3022**	FA 147	**2308**	FA 215	**2326**	SFA 306	**3067**	SFA 412	**3066**
FA 083/2	**2469**	FA 151	**2287**	FA 218	**2329**	FA 307	**2923**	FA 413	**2923**
FA 084	**2328**	SFA 151	**3009**	FA 220	**2361**	SFA 307	**3090**	FA 413	**1234**
FA 084/2	**2328**	FA 152	**2299**	FA 222	**2390**	FA 314	**1165**	FA 414	**1235**
FA 085	**2285**	FA 156	**2601**	FA 226	**2256**	FA 317	**1102**	SFA 415	**3083**
FA 086	**2621**	FA 157	**2388**	FA 228	**2288**	SFA 319	**3061**	FA 417/4	**1177**
SFA 086	**3096**	FA 158	**2251**	SFA 228	**3078**	FA 319/2	**1084**	SFA 418	**3077**
FA 088	**2283**	FA 159	**2927**	SFA 228	**3087**	FA 320	**1203**	FA 419	**1163**
FA 092	**2451**	FA 160	**2311**	FA 229	**2383**	SFA 321	**3054**	FA 423/4	**1175**
SFA 092	**3019**	FA 162	**2269**	FA 230	**2914**	FA 322/4	**1033**	FA 424	**2899**
SFA 092	**3074**	FA 163	**2400**	SFA 230	**3051**	FA 323	**1164**	SFA 425	**3084**
FA 094	**2699**	FA 165	**2326**	FA 231	**2384**	SFA 323/3	**3073**	FA 427	**1184**
FA 095	**2247**	SFA 165	**3036**	FA 232	**2924**	SFA 324	**3056**	SFA 427	**3089**
SFA 099	**3034**	FA 167	**1144**	SFA 234	**3041**	FA 325	**1128**	FA 427	**3092**
FA 101	**2284**	SFA 167	**3069**	SFA 235	**3047**	FA 335	**1101**	SFA 430	**3085**
SFA 101	**3008**	FA 169	**2696**	FA 236	**2246**	FA 342	**1142**	FA 432	**1187**
FA 103	**2280**	SFA 169	**3029**	FA 239	**1157**	FA 343	**1067**	FA 433/4	**1129**
FA 104	**2301**	FA 170	**2430**	FA 244	**2539**	FA 345	**1139**	FA 434	**1237**
FA 105	**2792**	FA 171	**2258**	FA 246	**2430**	FA 346	**1076**	FA 435/4	**1075**
FA 106	**2387**	FA 172	**2360**	FA 249	**2404**	FA 347	**1083**	FA 436	**1174**
FA 106/2	**2386**	FA 173	**2472**	FA 249	**2404**	FA 348	**1066**	FA 442/2	**1180**
FA 107	**2799**	FA 174	**2296**	FA 249	**2899**	FA 349	**1141**	FA 443	**1193**
FA 113	**2794**	SFA174	**3079**	FA 252	**2361**	FA 350	**1223**	FA 444	**1192**
FA 115	**2377**	SFA 178	**3038**	SFA 252	**3091**	SFA 350	**3063**	FA 445	**1195**
SFA 115	**3015**	FA 179	**2391**	FA 254	**2813**	SFA 353	**3060**	FA 446	**1194**
FA 116	**2260**	SFA 179	**3058**	SFA 255	**3043**	FA 355	**1151**	FA 447	**1185**
SFA 116	**3004**	FA 180	**2363**	SFA 255	**3045**	SFA 355	**3070**	FA 450	**1183**
FA 118	**2393**	FA 181	**2352**	FA 256	**3020**	SFA 356	**3071**	FA 452	**1229**

Tableau d'équivalences / Interchange list / Austauchliste / Tabella comparativa / Tablero de equivalencia

Street / Off-road / ATV / Scooter / Maxi-scooter

EBC	CL BRAKES	FERODO	CL BRAKES	FERODO	CL BRAKES	FERODO	CL BRAKES	FERODO	CL BRAKES
SFA 453	3100	FDB 108	2332	FDB 574	2251	FDB 2036	2404	FDB 2130	3079
FA 456	1220	FDB 185	2599	FDB 583	2393	FDB 2037	3045	FDB 2131	2313
FA 457	1212	FDB 204	2840	FDB 591	2392	FDB 2042	2539	FDB 2131	3059
FA 458	1213	FDB 207	2249	FDB 605	2361	FDB 2043	2720	FDB 2132	3074
FA 462R	1204	FDB 244	2289	FDB 605	3091	FDB 2044	2799	FDB 2133	2914
FA 464	1224	FDB 244	3011	FDB 606	2308	FDB 2048	2384	FDB 2133	3051
SFA 464	3099	FDB 250	2408	FDB 607	2388	FDB 2049	2383	FDB 2139	1076
FA 475	1222	FDB 250	3018	FDB 625	3038	FDB 2050	2430	FDB 2140	3071
FA 488	1217	FDB 312	2621	FDB 631	3036	FDB 2054	2924	FDB 2141	1151
SFA 492	3098	FDB 312	3096	FDB 636	2696	FDB 2055	2927	FDB 2141	3070
FA 496	1250	FDB 313	2469	FDB 636	3029	FDB 2056	3043	FDB 2142	3060
SFA 498	3094	FDB 313	3022	FDB 657	2430	FDB 2058	2390	FDB 2143	1067
FA 499/4	1216	FDB 314	2306	FDB 659	2299	FDB 2060	3020	FDB 2144	2255
FA 600	1238	FDB 333	2700	FDB 662	2253	FDB 2060	3021	FDB 2145	1139
FA 602	1219	FDB 334	2718	FDB 663	2248	FDB 2062	3027	FDB 2146	3072
SFA 603	3102	FDB 335	2701	FDB 672	3014	FDB 2073	2602	FDB 2147	3081
FA 606	1233	FDB 337	2283	FDB 673	2386	FDB 2073	3026	FDB 2148	2923
FA 612	1228	FDB 338	2282	FDB 677	3031	FDB 2074	2827	FDB 2148	3090
FA 627	3110	FDB 339	2285	FDB 680	1167	FDB 2074	3057	FDB 2149	1102
FA 628	3111	FDB 352	2699	FDB 680	2307	FDB 2075	2602	FDB 2150	1066
FA 630	1232	FDB 381	2328	FDB 680	3013	FDB 2075	3026	FDB 2156	1084
FA 636	1239	FDB 382	1164	FDB 694	1089	FDB 2079	2711	FDB 2157	1078
FA 662	1241	FDB 382	2451	FDB 694	3037	FDB 2080	2750	FDB 2158	1083
FA 663	1240	FDB 382	3019	FDB 697	2260	FDB 2080	1141	FDB 2162	1103
FA 678	3112	FDB 383	2284	FDB 697	3004	FDB 2081	3001	FDB 2163	1145
FA 679	1245	FDB 383	3008	FDB 706	1144	FDB 2083	2828	FDB 2164	1110
FA 680	1247	FDB 386	2301	FDB 706	3069	FDB 2083	3033	FDB 2165	1108
FA 700	1252	FDB 404	2387	FDB 731	2466	FDB 2084	2711	FDB 2167	2720
		FDB 411	2792	FDB 731	3024	FDB 2085	1175	FDB 2169	1148
		FDB 436	3034	FDB 736	2258	FDB 2085	3049	FDB 2169	3080
		FDB 438	2794	FDB 737	2360	FDB 2086	3074	FDB 2173	3066
		FDB 449	2305	FDB 741	2363	FDB 2087	3062	FDB 2178	1133
		FDB 449	2311	FDB 754	2296	FDB 2087	3086	FDB 2179	1149
		FDB 452	2310	FDB 781	2391	FDB 2090	3055	FDB 2180	1150
		FDB 452	3066	FDB 781	3058	FDB 2095	3064	FDB 2181	1134
		FDB 462	2252	FDB 783	3006	FDB 2096	3068	FDB 2182	1140
		FDB 481	2304	FDB 828	2472	FDB 2097	2958	FDB 2183	1128
		FDB 485	2342	FDB 828	3012	FDB 2098	2602	FDB 2184	1147
		FDB 495	2302	FDB 847	2369	FDB 2099	2539	FDB 2186	3077
		FDB 496	2385	FDB 851	3065	FDB 2100	3053	FDB 2187	3003
		FDB 497	2288	FDB 858	1157	FDB 2101	3041	FDB 2188	1142
		FDB 497	3078	FDB 864	2254	FDB 2102	2987	FDB 2190	3039
		FDB 497	3087	FDB 865	2362	FDB 2105	3056	FDB 2191	3047
		FDB 498	2398	FDB 866	2601	FDB 2106	1146	FDB 2192	3009
		FDB 499	2400	FDB 873	2255	FDB 2106	3031	FDB 2194	2269
		FDB 508	2389	FDB 892	2300	FDB 2108	3067	FDB 2196	1159
		FDB 531	2298	FDB 2002	2257	FDB 2110	1034	FDB 2197	1152
		FDB 531	3076	FDB 2003	2546	FDB 2111	2813	FDB 2200	3075
		FDB 533	2245	FDB 2003	3025	FDB 2113	2252	FDB 2203	1110
		FDB 538	2382	FDB 2005	2353	FDB 2114	2711	FDB 2204	1133
		FDB 538	3017	FDB 2007	2329	FDB 2115	3054	FDB 2205	1134
		FDB 539	2314	FDB 2012	2381	FDB 2119	3073	FDB 2206	1103
		FDB 557	2961	FDB 2015	2424	FDB 2120	1033	FDB 2207	3084
		FDB 557	2246	FDB 2018	2352	FDB 2121	2925	FDB 2208	3085
		FDB 561	2399	FDB 2018	2396	FDB 2124	2960	FDB 2210	1172
		FDB 569	2281	FDB 2018	3028	FDB 2125	1101	FDB 2211	3082
		FDB 570	2256	FDB 2022	2313	FDB 2126	3061	FDB 2212	3083
		FDB 570	3003	FDB 2036	2899	FDB 2128	3063	FDB 2213	1163

Tableau d'équivalences / Interchange list / Austauchliste / Tabella comparativa / Tablero de equivalencia

Street / Off-road / ATV / Scooter / Maxi-scooter

FERODO	CL BRAKES	SBS	CL BRAKES	SBS	CL BRAKES	SBS	CL BRAKES	SBS	CL BRAKES
FDB 2216	**1187**	100	**3018**	163	**3078**	553	**2702**	641	**2400**
FDB 2216	**1187**	101	**3022**	164	**3013**	554	**2840**	642	**2927**
FDB 2217	**1180**	102	**3022**	166	**3054**	555	**2283**	644	**2430**
FDB 2218	**1185**	104	**3019**	167	**3063**	556	**2282**	645	**2311**
FDB 2219	**1183**	105	**3015**	168	**3031**	557	**2285**	646	**2249**
FDB 2220	**1177**	106	**3037**	169	**3061**	558	**2451**	647	**2248**
FDB 2221	**1174**	107	**3008**	170	**3058**	559	**2377**	650	**2360**
FDB 2226	**3092**	108	**3021**	171	**3070**	562	**2328**	651	**2472**
FRP 213	**2950**	109	**3004**	172	**3071**	566	**2247**	652	**1144**
FRP 405	**2377**	110	**3009**	173	**3081**	570	**2301**	654	**2313**
FRP 405	**3015**	111	**3029**	174	**3074**	572	**2382**	657	**2296**
FRP 408	**2247**	113	**3024**	177	**3060**	574	**1089**	658	**2369**
FRP 417	**2584**	114	**3013**	178	**3067**	575	**2284**	659	**2269**
		115	**3038**	179	**3072**	577	**2280**	663	**2391**
		116	**3006**	180	**3080**	579	**2699**	665	**2309**
		117	**3053**	181	**3097**	580	**2792**	666	**2363**
		118	**3012**	182	**3066**	581	**2387**	668	**2342**
		118	**3024**	183	**3003**	582	**2386**	669	**2370**
		119	**3062**	183	**3065**	584	**2328**	670	**2408**
		120	**3031**	184	**3059**	586	**2306**	671	**2352**
		121	**3014**	185	**3075**	588	**2794**	672	**2601**
		122	**3051**	186	**3069**	589	**2424**	674	**2396**
		123	**3013**	187	**3077**	590	**2305**	675	**2353**
		124	**3020**	190	**3069**	591	**2799**	676	**2899**
		125	**3073**	191	**3084**	592	**2328**	677	**2584**
		127	**3017**	192	**3082**	593	**2252**	680	**2260**
		128	**3025**	193	**3083**	594	**2801**	682	**2362**
		129	**3041**	194	**3085**	595	**3034**	683	**2254**
		130	**3045**	195	**3089**	596	**2393**	684	**2472**
		131	**2249**	196	**3090**	597	**2304**	685	**2257**
		132	**3034**	197	**3087**	600	**2310**	686	**2255**
		134	**3036**	198	**3091**	601	**2398**	687	**2381**
		134	**3086**	200	**3096**	603	**2302**	688	**2326**
		135	**3012**	201	**3092**	604	**2314**	691	**2546**
		137	**2360**	202	**3043**	608	**2400**	692	**2306**
		138	**3001**	204	**3094**	611	**2288**	694	**2300**
		140	**3039**	205	**3102**	613	**2253**	695	**2329**
		141	**3047**	208	**3098**	614	**2298**	697	**2307**
		142	**3043**	219	**3100**	615	**2389**	698	**2950**
		143	**3013**	506	**2332**	616	**2392**	700	**2313**
		144	**3014**	507	**2847**	618	**2287**	701	**2390**
		145	**3027**	508	**2814**	619	**2696**	702	**2914**
		146	**3049**	513	**2599**	620	**2281**	703	**2430**
		147	**3026**	517	**2814**	621	**2399**	704	**2384**
		148	**3069**	519	**2249**	622	**2245**	705	**2383**
		149	**3013**	533	**2694**	623	**2385**	706	**2539**
		151	**3028**	536	**2408**	624	**2246**	707	**2720**
		152	**3055**	537	**2700**	626	**2308**	709	**1164**
		153	**3064**	541	**2466**	627	**2256**	713	**2288**
		154	**3068**	542	**2289**	630	**2313**	713	**3087**
		155	**3033**	543	**2718**	631	**2251**	714	**2961**
		155	**3095**	544	**2469**	632	**2299**	715	**2813**
		156	**3026**	546	**2306**	633	**2326**	716	**2927**
		157	**3057**	547	**2807**	634	**2361**	717	**2924**
		158	**3079**	548	**2469**	635	**2388**	719	**2922**
		159	**3056**	549	**2701**	638	**2326**	722	**2602**
		160	**3011**	550	**2802**	639	**2361**	723	**3047**
		161	**3076**	551	**2621**	640	**2258**	726	**2750**

Tableau d'équivalences / Interchange list / Austauchliste / Tabella comparativa / Tablero de equivalencia

Street / Off-road / ATV / Scooter / Maxi-scooter

SBS	CL BRAKES	SBS	CL BRAKES
728	**2828**	833	**1163**
729	**2404**	834	**1174**
730	**2827**	835	**1236**
733	**2713**	836	**1235**
734	**2711**	838	**1177**
735	**2602**	839	**1180**
735	**2923**	840	**1183**
736	**2602**	841	**1185**
737	**2249**	843	**1129**
740	**1175**	844	**1187**
742	**2900**	846	**1211**
746	**2987**	847	**3092**
747	**3055**	849	**1192**
749	**1123**	850	**1193**
750	**2958**	851	**1194**
752	**1034**	852	**1195**
754	**2923**	853	**1212**
755	**2925**	854	**1213**
758	**2926**	858	**1224**
762	**1033**	858	**3099**
763	**1203**	860	**2711**
765	**2813**	862	**1217**
767	**1102**	864	**1209**
769	**1084**	866	**1204**
770	**1066**	867	**1205**
773	**1223**	869	**1216**
774	**1146**	870	**1207**
775	**1151**	872	**1219**
777	**1076**	877	**1233**
778	**2960**	880	**1231**
779	**2404**	881	**2298**
782	**1083**	885	**1228**
783	**1078**	886	**2384**
784	**1067**	895	**1139**
787	**1165**	897	**1229**
788	**1110**	900	**1232**
789	**1145**	924	**2352**
790	**1103**		
791	**1108**		
794	**1128**		
796	**1101**		
797	**1148**		
798	**1141**		
801	**1142**		
805	**1075**		
806	**1133**		
807	**1149**		
808	**1150**		
809	**1134**		
810	**1147**		
813	**1140**		
814	**2621**		
816	**1102**		
820	**1152**		
822	**1171**		
824	**1167**		
828	**1159**		
830	**1172**		

Matériaux de friction série C685 / Sintered friction materials C685 serie / Gesinterte Reibungswerkstoffe Serie C685 / Materiali d'attrito serie C685 / Materiales de fricción Serie C685 (A3+, S4, RX3, XBK5, C60, MX10, EN10, X59, ATV1, SC, MSC)

Description
Matériau de friction métallique fritté, base bronze ; nickel, plomb et amiante sont exclus de la composition.
Application
Freinage sur disque acier d'origine pour moto, quad et scooter (disques fontes et Supersport : consulter votre revendeur).
Avantages
Matériau à usure particulièrement réduite sans dommage particulier pour le disque. Coefficient de frottement élevé et stable à froid, à chaud par temps sec ou pluie. Freinage instantané lié à une puissance élevée de freinage garantissant des distances d'arrêt minimum.
Recommandations
Rodage : freinage modéré sur les 300 premiers kilomètres. En conditions de freinage extrêmement sévères et répétitives, nécessité d'utiliser un étrier et un liquide hydraulique adaptés. Freinage sur disque fonte, compétition ou de provenance incertaine : consulter votre revendeur.

Composition
Sintered metallic material, bronze based (nickel, lead and asbestos are excluded from the composition).
Application
Braking on original motorcycle, ATV and scooter steel disc equipment (cast iron disc and Supersport: ask your dealer).
Advantages
Grade C685 provides instant and powerful braking without high wear nor damage on the disc. Very efficient whatever the conditions: hot or cold disc, dry or rainy weather... Thanks to high coefficient of friction. Consistency and high power capabilities allow the shortest stopping distances.
Recommendations
Proceed to smooth or moderate braking until 60 % of the pad area is in contact during the running in period. Frequent and severe braking will generate high temperature on the caliper. Appropriate caliper and hydraulic fluid are required for such conditions. For cast iron disc, racing, or unknown disc, ask your dealer.

Zusammensetzung
Gesinterte Metallwerkstoffe auf Bronzebasis: nickel- blei- und asbestfrei.
Anwendungsbereich
Bremsbeläge für Stahlbremsscheiben von Motorrädern in originalausstatung.

Composizione della mescola
Materiale d'attrito metallico sinterizzato a base di bronzo; nichel, piombo e amianto sono esclusi dal composto.
Applicazione
I nostri materiali d'attrito sono concepiti per frenata su disco in acciaio originale per moto, quad e scooter (per i dischi in ghisa e Supersport: consultare il vostro rivenditore). Frenata istantanea a potenza elevata che garantisce una distanza di frenata minima.
Raccomandazioni
Rodaggio: si raccomanda una frenata moderata per i primi 300 km. In condizioni di frenata severa e ripetitiva, si rende necessario l'utilizzo di una pinza e un liquido freni adatti. Frenata su disco in ghisa: consultate il vostro rivenditore.

Descripción
Material de fricción mètálico sinterizado, a base de bronze, sin plomo, sin amiento ni nickel.
Aplicacíon
Frenado sobre disco acero de origen para las motocicletas, ATV y scooter (Discos de hierro fundido y super deportivo : consulte su revendedor).
Ventajas
Material con usura muy reducida sin daño del disco. Coeficiente de fricción elevado e estable en todo tipo de tiempo y a cualquiera temperadura de las pastillas (frías o caldas). Frenado instentaneo en relación con una potencia elevada de frenado que garantiza distencias de parada mínima.
Recomandaciones
Rodaje :frenado moderado sobre los 300 primeros kilómetros. En condiciones de frenados extremos y repetitivos, es necesario usar una pinza de freno y un liquido hidráulico adaptables.

Garanties / Warranty / Gewährleistung / Garanzie / Garantías

FLERTEX SINTER garantit ses produits contre tous vices (matériaux et exécution). Toute application de la garantie, qu'il s'agisse de la garantie indiquée ci-avant ou de toute autre garantie implicite est strictement limitée à la seule réparation ou au seul remplacement des parties défectueuses.

Toutes les informations figurant sur le présent document résultent d'essais faits dans des conditions de laboratoire et sont données à titre indicatif.

FLERTEX SINTER n'assure aucune responsabilité quant aux conséquences de l'utilisation de ces informations à quelques fins que ce soit. Toute copie, reproduction ou traduction de ces informations, intégralement ou partiellement, sans accord écrit de FLERTEX SINTER, est interdite conformément aux dispositions de la loi n°92-597 du 1er juillet 1992.

FLERTEX SINTER warrants and undertakes that it will replace or repair any defective material or workmanship, and which, under proper use, appears in its products. The express warranties set forth herein shall constitute the sole and exclusive warranties and garantees made by the vendor. Accordingly the remedies for any failure by FLERTEX SINTER to comply with its said warranties and are exclusive and in lieu of all other remedies of any kind.

The information presented herein is based exclusively on lab tests considered to be accurate at the date of preparation of this brochure.

However no warranty or representation expressed implied is made as to the accuracy of the forgoing data. In addition no responsability can be assumed by FLERTEX SINTER.

Im Fall von material- oder Herstellungsfehlern, die bei ordnungsgemäßen Gebrauch der Produkte auftreten, verpflichtet sich der FLERTEX SINTER zum Ersatz oder zur Reparatur des betroffenen Produktes.

Die FLERTEX SINTER garantie beschränkt sich auf die ausdrücklich im vorliegenden Dokument festgesetzte Garantie. Infolgedessen stellen die hierin festgelegten Garantiemaßnahmen die einzigen Maßnahmen dar, die vom FLERTEX SINTER für jegliche Defekte im Hinblick auf die Erfüllung der Garantie durchzuführen sind, und ersetzen sämtliche andere mögliche Abhilfemaßnahmen.

Die in der vorliegenden Broschüre enthaltenen Informationen stützen sich ausschließlich auf die bei Redaktionsschluß als für gültig erachtete Laboruntersuchungen Dennoch verstehen sich die vorstehenden Angaben im Hinblick auf ihre Richtigkeit und Vollständigkeit ohne Gewähr. Darüber hinaus übernimmt der Carbone lorraine composants keinerlei Garantie für Schäden, Verletzungen oder Ausfälle, die auf einen nicht ordnungsgemäßen Gebrauch der Produkte oder auf mit deren Gebrauch verbundene Risiken zurückzuführen sind.

FLERTEX SINTER garantisce i suoi prodotti contro tutti i difetti di materiale e di fabbricazione. L'applicazione di tale garanzia o di qualsiasi altra garanzia implicita è strettamente limitata alla sola riparazione o sostituzione delle parti difettose.

Tutte le informazioni presenti su questo catalogo sono il risultato di test di laboratorio e sono pertanto puramente indicative.

FLERTEX SINTER non si assume responsabilità per le conseguenze dell'utilizzo di queste informazioni a qualsiasi titolo o scopo. La copia, riproduzione o la traduzione di queste informazioni, integrale o parziale, senza accordo scritto da parte di FLERTEX SINTER, è vietata.

FLERTEX SINTER garantiza sus productos contra todos defectos (material y fabricación) Toda aplicación de la garantía que sea la garantía indicada arriba o toda otra garantía implícita, se limita a la reparación o a la sustitución de las partes defectuosas.

Todas las informaciones que están en este documento resultan de pruebas realizadas en laboratorio y están dadas a titulo indicativo.

FLERTEX SINTER no asegura ninguna responsabilidad en lo que concierne las consecuencias del uso de estas informaciones a cualquier fin que sea. Toda copia, reproducción o traducción de estas informaciones, sin accuerdo escribido de FLERTEX SINTER, esta prohibida.

NOTES

CL BRAKES
HIGH PERFORMANCE
SINTERED
BRAKE PADS
Confidis
Red Bull
SHARK
Visit Malaysia
DBC
MOTOREX
NG
Brake Disc
CL BRAKES
AVANT

CL BRAKES

HIGH PERFORMANCE
SINTERED
BRAKE PADS

ADDRESS
FLERTEX SINTER
41 RUE JEAN JAURES - BP 102
92232 GENNEVILLIERS CEDEX
FRANCE

CONTACTS
+33 (0) 1 41 85 44 92
+33 (0) 1 41 85 44 91
info@cl-brakes.com
www.cl-brakes.com
pro.cl-brakes.com

NoNiTech®
No Nickel Technology