2020

motorcycle & scooter

YOUR BEST PARTNER


RMS
YOUR BEST PARTNER

YOUR BEST PARTNER

IL MIGLIOR PARTNER
PER LE MIGLIORI PRESTAZIONI

RMS spa è un'azienda **leader** nella distribuzione di **ricambi** ed **accessori per bici**, **moto&scooter** ed **e-bike** ed opera a livello nazionale ed europeo proponendo ai rivenditori e alle officine specializzate un catalogo di oltre 30 mila articoli.

L'azienda si avvale di **partnership consolidate** con i maggiori produttori del settore distribuendo brand di prestigio e qualità coprendo le esigenze di tutti i clienti.

La **soddisfazione del cliente** rappresenta da sempre una delle principali priorità dell'azienda: RMS offre un servizio di distribuzione veloce e capillare grazie ad un **magazzino automatizzato** che permette l'evasione dell'ordine in 24 ore, ad un'efficiente **Customer Service** e una **rete agenti specializzata** presente su tutto il territorio nazionale.






I NUMERI DI RMS

- **40** AGENTI — SUL TERRITORIO NAZIONALE ED ESTERO
- **4.000+** CLIENTI
- **80+** BRAND TRATTATI
- **24.000 MQ** SUPERFICIE TOTALE
  - DI CUI **15.000 MQ** INTERAMENTE COPERTI
  - UFFICI **500 MQ**
- OLTRE **30.000** REFERENZE A MAGAZZINO
- **400+** CONTAINER MOVIMENTATI ANNUALMENTE
- MAGAZZINO **AUTOMATICO CON TRASLOELEVATORI**
  - CAPACITÀ DI STOCCAGGIO DI 33.000 CELLE CONTENENTI PIÙ CODICI PRODOTTO
- **18.000** POSTI PALLETS
- SISTEMA **MODULA**
  - 4 ARMADI VERTICALI IN GRADO DI GESTIRE 40 ORDINI CONTEMPORANEAMENTE CIASCUNO
- MAGAZZINI AUTOMATIZZATI CON SISTEMA **RFID**

PERCHÈ RMS

AMPIA SCELTA
Con oltre 30.000 prodotti a catalogo.

SUPPORTO
Il customer service garantisce in ogni momento sia assistenza tecnica che commerciale.

QUALITÀ
RMS controlla e seleziona i migliori prodotti per offrire al cliente solo i brand di eccellenza.

LOGISTICA
Macchinari interconnessi tra di loro e sistemi logistici totalmente automatizzati. RMS è pronta per garantire sempre il servizio migliore ai propri clienti.

MAGGIOR VELOCITÀ
Tempi di consegna ridotti grazie a procedure di ultima generazione.

VANTAGGI ECONOMICI
Grazie ad una struttura aziendale evoluta, RMS garantisce un prezzo di mercato estremamente competitivo.



SERVIZI
ad hoc pensati per te

FORMAZIONE

Formazione ed aggiornamenti sul mondo moto.

- SEMINARI TECNICI
- TECHNEWS MENSILI

SUPPORTO TECNICO

Il nostro team di Product Specialist è sempre al tuo servizio. Una **linea dedicata** per darti tutto il supporto tecnico di cui hai bisogno.

L'INTERFACCIA UTENTE: IL B2B



L'area riservata RMS è il portale completamente dedicato alle tue esigenze. Uno **strumento** unico **per molteplici** funzioni:

- GESTIONE DIRETTA DEGLI ORDINI
- CONTROLLO DELLA SITUAZIONE CONTABILE
- GIACENZA DEI PRODOTTI IN TEMPO REALE
- CONFIGURATORI SVILUPPATI PER FACILITARE LA SCELTA DEL PRODOTTO
- RICERCA PERSONALIZZATA DEI PRODOTTI
- VISIONE DELLE PROMOZIONI IN CORSO
- SELEZIONE DI SERVIZI DEDICATI, COME IL TRACKING SPEDIZIONE TRAMITE WHATSAPP E L'EXPRESS DELIVERY
- NEWS DI PRODOTTO
- COMUNICAZIONI AZIENDALI

LO SAI CHE...
I configuratori e la ricerca per applicazioni

CONFIGURATORI

Il configuratore è lo strumento che permette di **trovare con precisione** il prodotto cercato all'interno del Brand selezionato.

Attraverso l'utilizzo dei filtri, il configuratore consente una **ricerca veloce e semplice.**

Inoltre, con l'ausilio delle schede tecniche, è possibile consultare le specifiche del prodotto e valutare i prodotti simili o correlati.



RICERCA PER APPLICAZIONI

La ricerca per applicazioni consente di **visualizzare i prodotti**, di tutti i marchi, relativi al modello selezionato.

Uno strumento semplice e rapido che ti permette di trovare i soli prodotti correlati alla tua ricerca.

INDICE

A

Accessori Alberi di Trasmissione 955
Accessori Ammortizzatori - Sospensioni 1405
Accessori Batterie 746
Accessori Cablaggi 720
Accessori Candele 538
Accessori Carburatore 121
Accessori Carrozzeria 1093
Accessori Cavalletti 1241
Accessori Cavalletti Reggimoto 1511
Accessori Cavi Trasmissione 1307
Accessori Centraline 640
Accessori Comandi 1194
Accessori Contachilometri 1267
Accessori Copriventola 289
Accessori Fanali e Frecce 565
Accessori Ganasce Freno 491
Accessori Impianto Frenante 528
Accessori Leve 1181
Accessori Manopole 1214
Accessori Marmitte - Tubi di Scarico 296
Accessori Motore 292
Accessori Pedali 1323
Accessori Pignoni messa in moto 265
Accessori Pulegge 950
Accessori Rubinetti Benzina 107
Accessori Selle 1333
Accessori Serbatoi benzina 111
Accessori Serbatoi Olio 242
Accessori Serie Sterzo 1262
Accessori Serrature 1320
Accessori Specchietti 1057
Accessori Tamburo 523
Accessori Telaio 1334
Accessori Teste Cilindro 183
Accessori Trasmissione 961
Accessori Tubazione Benzina 115
Accessori Volani, Rotori e Statori 706
Adattatori Specchietti 1056
Alberi Motore 124
Alberi Trasmissione 954
Ammortizzatori 1340
Anelli Portaspazzole 685
Applicazioni Campane e Giranti 825
Applicazioni Pastiglie e Ganasce Freno 308
Attrezzi e Utensili 1539
Avvisatori Acustici 596

B

Batterie al Litio 732
Batterie al Piombo Acido 742
Batterie Precaricate 739
Bobine 641

C

Cablaggi 719
Calandre 1066
Camere d'Aria 1492
Campane Frizione 842
Candele di Accensione 530
Capiguaina 1312
Caricabatterie 747
Catene di Distribuzione 267
Catene Pompe Olio 244
Catene Trasmissione 814
Cavalletti Centrali 1226
Cavalletti Laterali 1215
Cavalletti Reggimoto 1510
Cavi Trasmissione 1272
Cavi Trasmissione Ape 1298
Centraline 631
Cerchi 1327
Cilindretti Freno 524
Cilindri 155
Cinghie di Distribuzione 282
Cinghie di Trasmissione 852
Cinghie Miscelatore 122
Cinghie Trasporto 1512
Collettori Aspirazione 63
Collettori Scarico 299
Comandi Gas 1188
Comandi Portaleva 1185
Commutatori Accensione 717
Condensatori 721
Connettori 723
Contachilometri 1264
Contatti 726
Coppia Trasmissioni Primarie (Vespa-Ape) 959
Coprimanubri 1063
Copriventola 289
Coprivolano 1065
Creste Parafango 1062
Cuffie 288
Cuscinetti a Sfere 1414

D

Devio Frecce 590
Devio Luci 592
Dischi Freno 492
Dischi Frizione 957

F

Fanali Completi 542
Fasce Luminose 585
Filtri Aria 16
Filtri Carburante 108
Filtri Olio 187
Flap® 1493
Forcelle 1245
Frecce 548
Fusibili 630

G

Gabbie a Rulli 1422
Ganasce Freno 486
Giranti Frizione 845
Giunti Catene Distribuzione 280
Giunti Catene Trasmissione 823
Gomme 1480
Gommini Antivibranti 1090
Guaine 1311
Guarnizioni 1426

I

Ingranaggi Avviamento 257
Interruttori 600

J

Jump Starter 750

K

Kit Cavi Trasmissione 1304
Kit Conversione a LED 1514
Kit Forcella 1410
Kit Ingranaggi Avviamento 260
Kit JT Catena - Corona - Pignone 752
Kit Primo Soccorso 1521
Kit Pulegge Motrici 949
Kit Revisione Albero Motore 151
Kit Revisione Pompa Acqua 245
Kit Riparazione Pneumatici 1515
Kit Tagliando Scooter 1496

L

Lampadine 572
Lenti Fanali 563
Lenti Freccia 556
Leve 1098
Lubrificanti e Olii 1578
Lucchetti e Catene 1499

M

Manopole 1197
Manubri 1182
Marmitte - Tubi Scarico 294
Membrane Carburatore 116
Minuteria Metallica 1575
Molle a gas 1329
Molle Frizione (Vespa-Ape) 958
Molle Messa in Moto 266
Morsetti Cavi 1308
Motorini d'Avviamento 673

O

O-Ring 1477

P

Pacchi Lamellari 79
Parafanghi 1058
Paraoli 1458
Passacavi 1309
Pastiglie Freno 425
Pattini Tendicatena 281
Pedali e Puntapiedi 1322
Pedivelle Messa in Moto 1324
Pick Up 707
Pignoni Contachilometri 1269
Pignoni Messa in Moto 262
Pistoni - Fasce Elastiche 184
Plastiche Carrozzeria 1086
Pompe Benzina 88
Pompe Freno 527
Pompe Olio 243
Portalampada 570
Portapacchi 1508
Portatarga 1085
Prese di Corrente 730
Preselettori Cambio (Vespa-Ape) 960
Prigionieri Motore 285
Prodotti Officina 1524
Prodotti Pulizia 1537
Profili Carrozzeria Vespa 1068
Pulegge 898
Pulsanti 587

Q

Quadri Chiave 708

R

Registri Cavi 1310
Regolatori di Tensione 658
Relè 606
Resistenze 605
Reti Elastiche 1509
Rinvii Contachilomentri 1270
Rivetti 1091
Rotori 700
Rubinetti Benzina 103
Rulli Pulegge 922
Ruote Libere Avviamento 252

S

Sensori / Termostati 611
Serbatoi Benzina 110
Serbatoio Olio 241
Serie Sterzo 1248
Serrature 1313
Set Girante Campana 851
Silentblock Motore 290
Soffietti / Manicotti 85
Sonde Lambda 300
Spazzole Tergicristallo 1089
Specchietti Retrovisori 968
Statori 686
Steli Forcelle 1247

T

Tamburi Freno 522
Tamponi 291
Tappetini in Gomma 1071
Targhette - Scudi - Fregi 1073
Teli Copri Moto 1513
Teste Cilindro 181
Teste Forcelle 1246
Tester Batterie 749
Tubazione Benzina 113
Tubi Comando 1192

V

Valvole 1494
Volani Completi 701

ASPIRAZIONE
Collettori Aspirazione 63
Filtri Aria 16
Pacchi Lamellari 79
Soffietti / Manicotti 85

ALIMENTAZIONE
Accessori Carburatore 121
Accessori Rubinetti Benzina 107
Accessori Serbatoi benzina 111
Accessori Tubazione Benzina 115
Cinghie Miscelatore 122
Filtri Carburante 108
Membrane Carburatore 116
Pompe Benzina 88
Rubinetti Benzina 103
Serbatoi Benzina 110
Tubazione Benzina 113

MOTORE
Accessori Copriventola 289
Accessori Motore 292
Accessori Pignoni messa in moto 265
Accessori Serbatoi Olio 242
Accessori Teste Cilindro 183
Alberi Motore 124
Catene di Distribuzione 267
Catene Pompe Olio 244
Cilindri 155
Cinghie di Distribuzione 282
Copriventola 289
Cuffie 288
Filtri Olio 187
Giunti Catene Distribuzione 280
Ingranaggi Avviamento 257
Kit Ingranaggi Avviamento 260
Kit Revisione Albero Motore 151
Kit Revisione Pompa Acqua 245
Molle Messa in Moto 266
Pattini Tendicatena 281
Pignoni Messa in Moto 262
Pistoni - Fasce Elastiche 184
Pompe Olio 243
Prigionieri Motore 285
Ruote Libere Avviamento 252
Serbatoio Olio 241
Silentblock Motore 290
Tamponi 291
Teste Cilindro 181

SCARICO
Accessori Marmitte - Tubi di Scarico 296
Collettori Scarico 299
Marmitte - Tubi Scarico 294
Sonde Lambda 300

IMPIANTO FRENANTE
Accessori Ganasce Freno 491
Accessori Impianto Frenante 528
Accessori Tamburo 523
Applicazioni Pastiglie e Ganasce Freno 308
Cilindretti Freno 524
Dischi Freno 492
Ganasce Freno 486
Pastiglie Freno 425
Pompe Freno 527
Tamburi Freno 522

IMPIANTO ELETTRICO
Accessori Cablaggi 720
Accessori Candele 538
Accessori Centraline 640
Accessori Fanali e Frecce 565
Accessori Volani, Rotori e Statori 706
Anelli Portaspazzole 685
Avvisatori Acustici 596
Bobine 641
Cablaggi 719
Candele di Accensione 530
Centraline 631
Commutatori Accensione 717
Condensatori 721
Connettori 723
Contatti 726
Devio Frecce 590
Devio Luci 592
Fanali Completi 542
Fasce Luminose 585
Frecce 548
Fusibili 630
Interruttori 600
Lampadine 572
Lenti Fanali 563
Lenti Freccia 556
Motorini d'Avviamento 673
Pick Up 707
Portalampada 570
Prese di Corrente 730
Pulsanti 587
Quadri Chiave 708
Regolatori di Tensione 658
Relè 606
Resistenze 605
Rotori 700
Sensori / Termostati 611
Statori 686
Volani Completi 701

BATTERIE
Accessori Batterie 746
Batterie al Litio 732
Batterie al Piombo Acido 742
Batterie Precaricate 739
Caricabatterie 747
Jump Starter 750
Tester Batterie 749

TRASMISSIONE
Accessori Alberi di Trasmissione 955
Accessori Pulegge 950
Accessori Trasmissione 961
Alberi Trasmissione 954
Applicazioni Campane e Giranti 825
Campane Frizione 842
Catene Trasmissione 814
Cinghie di Trasmissione 852
Coppia Trasmissioni Primarie (Vespa-Ape) 959
Dischi Frizione 957
Giranti Frizione 845
Giunti Catene Trasmissione 823
Kit JT Catena - Corona - Pignone 752
Kit Pulegge Motrici 949
Molle Frizione (Vespa-Ape) 958
Preselettori Cambio (Vespa-Ape) 960
Pulegge 898
Rulli Pulegge 922
Set Girante Campana 851

CARROZZERIA
Accessori Carrozzeria 1093
Accessori Specchietti 1057
Adattatori Specchietti 1056
Calandre 1066
Coprimanubri 1063
Coprivolano 1065
Creste Parafango 1062
Gommini Antivibranti 1090
Parafanghi 1058
Plastiche Carrozzeria 1086
Portatarga 1085
Profili Carrozzeria Vespa 1068
Rivetti 1091
Spazzole Tergicristallo 1089
Specchietti Retrovisori 968
Tappetini in Gomma 1071
Targhette - Scudi - Fregi 1073

TELAIO
Accessori Cavalletti 1241
Accessori Cavi Trasmissione 1307
Accessori Comandi 1194
Accessori Contachilometri 1267
Accessori Leve 1181
Accessori Manopole 1214
Accessori Pedali 1323
Accessori Selle 1333
Accessori Serie Sterzo 1262
Accessori Serrature 1320
Accessori Telaio 1334
Capiguaina 1312
Cavalletti Centrali 1226
Cavalletti Laterali 1215
Cavi Trasmissione 1272
Cavi Trasmissione Ape 1298
Cerchi 1327
Comandi Gas 1188
Comandi Portaleva 1185
Contachilometri 1264
Forcelle 1245
Guaine 1311
Kit Cavi Trasmissione 1304
Leve 1098
Manopole 1197
Manubri 1182
Molle a gas 1329
Morsetti Cavi 1308
Passacavi 1309
Pedali e Puntapiedi 1322
Pedivelle Messa in Moto 1324
Pignoni Contachilometri 1269
Registri Cavi 1310
Rinvii Contachilomentri 1270
Serie Sterzo 1248
Serrature 1313
Steli Forcelle 1247
Teste Forcelle 1246
Tubi Comando 1192

SOSPENSIONI
Accessori Ammortizzatori - Sospensioni 1405
Ammortizzatori 1340
Kit Forcella 1410

CUSCINETTI
Cuscinetti a Sfere 1414
Gabbie a Rulli 1422

TENUTA
Guarnizioni 1426
O-Ring 1477
Paraoli 1458

GOMME
Camere d'Aria 1492
Flap® 1493
Gomme 1480
Valvole 1494

ACCESSORI
Accessori Cavalletti Reggimoto 1511
Cavalletti Reggimoto 1510
Cinghie Trasporto 1512
Kit Conversione a LED 1514
Kit Primo Soccorso 1521
Kit Riparazione Pneumatici 1515
Kit Tagliando Scooter 1496
Lucchetti e Catene 1499
Portapacchi 1508
Reti Elastiche 1509
Teli Copri Moto 1513

OFFICINA
Attrezzi e Utensili 1539
Minuteria Metallica 1575
Prodotti Officina 1524
Prodotti Pulizia 1537

LUBRIFICANTI E PRODOTTI CHIMICI
Lubrificanti e Olii 1578

INDEX

A	
Air Filters	16
Ape Transmission Cables	1298
B	
Ball Bearings	1414
Batteries Accessories	746
Battery Chargers	747
Battery Testers	749
Belts Mixer	122
Blinkers	548
Blinkers Lenses	556
Blinkers Switches	590
Bodyparts Accessories	1093
Brake Cylinders	524
Brake Discs	492
Brake Drums	522
Brake Drums Accessories	523
Brake Master Cylinders	527
Brake Pads	425
Brake Pads and Brake Shoes Applications	308
Brake Shoes	486
Brake Shoes Accessories	491
Braking System Accessories	528
Brush Holders	685
Buffers	291
Buttons	587
C	
Cable Clamps	1308
Cable Ends	1312
Cable Registers	1310
Carburetor Accessories	121
Carburetor Diaphragm	116
Cargo Nets	1509
Carriers	1508
CDI	631
CDI Accessories	640
Central Stands	1226
Chassis Accessories	1334
Chassis Beadings Vespa	1068
Chassis Plastics	1086
Cleaning Products	1537
Clutch Assy	845
Clutch Assy and Belts Applications	825
Clutch Bell and Assy Kit	851
Clutch Bells	842
Clutch Discs	957
Clutch Springs (Vespa-Ape)	958
Coils	641
Complete Lights	542
Complete Lights Lenses	563
Complete Magnetos	701
Condensators	721
Controls Accessories	1194
Crankshafts	124
Crankshafts Revision Kits	151
Cylinder	155
Cylinder Cowlings	288
Cylinder Heads	181
Cylinder Heads Accessories	183
E	
Electrical Connectors	723
Engine Accessories	292
Engine Silentblock	290
Engine Studs	285
Exhaust Manifolds	299
F	
Fan Covers	289
Fan Covers Accessories	289
Fender Crests	1062
First Aid Kit	1521
Floor Mats	1071
Flywheel Covers	1065
Footrests and Pedals	1322
Fork kits	1410
Fork Stems	1247
Forks	1245
Forks Heads	1246
Fuel Filters	108
Fuel Hose	113
Fuel Hose Accessories	115
Fuel Pumps	88
Fuel Tanks	110
Fuel Tanks Accessories	111
Fuel Taps	103
Fuel Taps Accessories	107
Fuses	630
G	
Gaskets	1426
Gear Box Selectors (Vespa-Ape)	960
Grips	1197
Grips Accessories	1214
Grommets	1309
H	
Handlebar Covers	1063
Handlebars	1182
Hardware	1575
Holders for Bulbs	570
Horns	596
I	
Ignition Switches	717
Inlet Pipes	63
J	
Jump Starters	750
K	
Key Sets Main Switches	708
Kick Starter Levers	1324
Kit JT Chain - Crown - Sprockets	752
L	
Lamps	572
Lead Acid Batteries	742
LED Conversion Kits	1514
Levers	1098
Levers Accessories	1181
Levers Supports	1185
Lights and Blinkers Accessories	565
Lights Switches	592
Lithium Batteries	732
Locks	1313
Locks Accessories	1320
Locks and Chains	1499
Luminous Bands	585
M	
Magnetos, Rotors and Stators Accessories	706
Motorcycle Covers	1513
Mudguards	1058
Mufflers	294
Mufflers Accessories	296
N	
Nameplates - Badges - Emblems	1073
O	
O-Rings	1477
Oil Filters	187
Oil Pump Chains	244
Oil Pumps	243
Oil Seals	1458
Oil Tank	241
Oil Tanks Accessories	242
Oils and Lubricants	1578
Outer Cables	1311
Oxygen Sensors	300
P	
Paddock Stands	1510
Paddock Stands Accessories	1511
Pedals Accessories	1323
Pick Up	707
Pinion Starters	262
Pinion Starters Accessories	265
Piston - Piston Rings	184
Plastic Rivets	1091
Plate Holders	1085
Platiners	726
Precharged Batteries	739
Pulley Kits	949
Pulleys	898
Pulleys Accessories	950
R	
Rear View Mirrors	968
Rear View Mirrors Accessories	1057
Rear View Mirrors Adapters	1056
Reed Valves	79
Regulators	658
Relays	606
Repair Kits for Tires	1515
Resistors	605
Rim Tapes	1493
Roller Cages	1422
Roller Sets	922
Rotors	700
Rubber Pads	1090
S	
Saddle Gas Springs	1329
Seats Accessories	1333
Sensors / Thermostats	611
Service Kits For Scooter	1496
Shock Absorbers	1340
Shock Absorbers - Suspensions Accessories	1405
Side Stands	1215
Sleeves / Intake Bellows	85
Sockets	730
Spark Plugs	530
Spark Plugs Accessories	538
Speedometers	1264
Speedometers Accessories	1267
Speedometers Gears	1270
Speedometers Pinions	1269
Stands Accessories	1241
Starter Gears	257
Starter Gears Kit	260
Starter Motors	673
Starter Springs	266
Starter Wheels	252
Stators	686
Steering Covers	1066
Steering Head Bearing Set	1248
Steering Head Bearing Set Accessories	1262
Switches	600
T	
Throttle and Shift Controls	1192
Throttles Handles	1188
Tie Down	1512
Timing Belts	282
Timing Chain Guides Kit	281
Timing Chains	267
Timing Chains Connecting Links	280
Tires	1480
Tools	1539
Transmission Accessories	961
Transmission Belts	852
Transmission Cables	1272
Transmission Cables Accessories	1307
Transmission Cables Couple (Vespa-Ape)	959
Transmission Cables Kits	1304
Transmission Chains	814
Transmission Chains Connecting Links	823
Transmission Shafts	954
Transmission Shafts Accessories	955
Tubes	1492
V	
Valves	1494
W	
Water Pump Repair Kits	245
Wheelrims	1327
Wiper Blades	1089
Wirings	719
Wirings Accessories	720
Workshop Tools	1524

INTAKE SYSTEM
Air Filters 16
Inlet Pipes 63
Reed Valves 79
Sleeves / Intake Bellows 85

FUEL SYSTEM
Belts Mixer 122
Carburetor Accessories 121
Carburetor Diaphragm 116
Fuel Filters 108
Fuel Hose 113
Fuel Hose Accessories 115
Fuel Pumps 88
Fuel Tanks 110
Fuel Tanks Accessories 111
Fuel Taps 103
Fuel Taps Accessories 107

ENGINE
Buffers 291
Crankshafts 124
Crankshafts Revision Kits 151
Cylinder 155
Cylinder Cowlings 288
Cylinder Heads 181
Cylinder Heads Accessories 183
Engine Accessories 292
Engine Silentblock 290
Engine Studs 285
Fan Covers 289
Fan Covers Accessories 289
Oil Filters 187
Oil Pump Chains 244
Oil Pumps 243
Oil Tank 241
Oil Tanks Accessories 242
Pinion Starters 262
Pinion Starters Accessories 265
Piston - Piston Rings 184
Starter Gears 257
Starter Gears Kit 260
Starter Springs 266
Starter Wheels 252
Timing Belts 282
Timing Chain Guides Kit 281
Timing Chains 267
Timing Chains Connecting Links 280
Water Pump Repair Kits 245

EXHAUST SYSTEM
Exhaust Manifolds 299
Mufflers 294
Mufflers Accessories 296
Oxygen Sensors 300

BRAKING SYSTEM
Brake Cylinders 524
Brake Discs 492
Brake Drums 522
Brake Drums Accessories 523
Brake Master Cylinders 527
Brake Pads 425
Brake Pads and Brake Shoes Applications 308
Brake Shoes 486
Brake Shoes Accessories 491
Braking System Accessories 528

ELECTRICAL SYSTEM
Blinkers 548
Blinkers Lenses 556
Blinkers Switches 590
Brush Holders 685
Buttons 587
CDI 631
CDI Accessories 640
Coils 641
Complete Lights 542
Complete Lights Lenses 563
Complete Magnetos 701
Condensators 721
Electrical Connectors 723
Fuses 630
Holders for Bulbs 570
Horns 596
Ignition Switches 717
Key Sets Main Switches 708
Lamps 572
Lights and Blinkers Accessories 565
Lights Switches 592
Luminous Bands 585
Magnetos, Rotors and Stators Accessories 706
Pick Up 707
Platiners 726
Regulators 658
Relays 606
Resistors 605
Rotors 700
Sensors / Thermostats 611
Sockets 730
Spark Plugs 530
Spark Plugs Accessories 538
Starter Motors 673
Stators 686
Switches 600
Wirings 719
Wirings Accessories 720

BATTERIES
Batteries Accessories 746
Battery Chargers 747
Battery Testers 749
Jump Starters 750
Lead Acid Batteries 742
Lithium Batteries 732
Precharged Batteries 739

TRANSMISSION
Clutch Assy 845
Clutch Assy and Belts Applications 825
Clutch Bell and Assy Kit 851
Clutch Bells 842
Clutch Discs 957
Clutch Springs (Vespa-Ape) 958
Gear Box Selectors (Vespa-Ape) 960
Kit JT Chain - Crown - Sprockets 752
Pulley Kits 949
Pulleys 898
Pulleys Accessories 950
Roller Sets 922
Transmission Accessories 961
Transmission Belts 852
Transmission Cables Couple (Vespa-Ape) 959
Transmission Chains 814
Transmission Chains Connecting Links 823
Transmission Shafts 954
Transmission Shafts Accessories 955

BODY WORK
Bodyparts Accessories 1093
Chassis Beadings Vespa 1068
Chassis Plastics 1086
Fender Crests 1062
Floor Mats 1071
Flywheel Covers 1065
Handlebar Covers 1063
Mudguards 1058
Nameplates - Badges - Emblems 1073
Plastic Rivets 1091
Plate Holders 1085
Rear View Mirrors 968
Rear View Mirrors Accessories 1057
Rear View Mirrors Adapters 1056
Rubber Pads 1090
Steering Covers 1066
Wiper Blades 1089

CHASSIS
Ape Transmission Cables 1298
Cable Clamps 1308
Cable Ends 1312
Cable Registers 1310
Central Stands 1226
Chassis Accessories 1334
Controls Accessories 1194
Footrests and Pedals 1322
Fork Stems 1247
Forks 1245
Forks Heads 1246
Grips 1197
Grips Accessories 1214
Grommets 1309
Handlebars 1182
Kick Starter Levers 1324
Levers 1098
Levers Accessories 1181
Levers Supports 1185
Locks 1313
Locks Accessories 1320
Outer Cables 1311
Pedals Accessories 1323
Saddle Gas Springs 1329
Seats Accessories 1333
Side Stands 1215
Speedometers 1264
Speedometers Accessories 1267
Speedometers Gears 1270
Speedometers Pinions 1269
Stands Accessories 1241
Steering Head Bearing Set 1248
Steering Head Bearing Set Accessories 1262
Throttle and Shift Controls 1192
Throttles Handles 1188
Transmission Cables 1272
Transmission Cables Accessories 1307
Transmission Cables Kits 1304
Wheelrims 1327

SUSPENSIONS
Fork kits 1410
Shock Absorbers 1340
Shock Absorbers - Suspensions Accessories 1405

BEARINGS
Ball Bearings 1414
Roller Cages 1422

TIGHT SYSTEM
Gaskets 1426
O-Rings 1477
Oil Seals 1458

TIRES
Rim Tapes 1493
Tires 1480
Tubes 1492
Valves 1494

ACCESSORIES
Cargo Nets 1509
Carriers 1508
First Aid Kit 1521
LED Conversion Kits 1514
Locks and Chains 1499
Motorcycle Covers 1513
Paddock Stands 1510
Paddock Stands Accessories 1511
Repair Kits for Tires 1515
Service Kits For Scooter 1496
Tie Down 1512

WORKSHOP
Cleaning Products 1537
Hardware 1575
Tools 1539
Workshop Tools 1524

LUBRICANTS AND CHEMICAL PRODUCTS
Oils and Lubricants 1578

ÍNDICE

A	
Abrazaderas de Cables	1308
Accesorios Amortiguadores - Suspensiones	1405
Accesorios Asientos	1333
Accesorios Baterias	746
Accesorios Bujias	538
Accesorios Caballetes	1241
Accesorios Caballetes de Competicion	1511
Accesorios Cableados	720
Accesorios Cables de Transmisión	1307
Accesorios Campanas y Mordazas	825
Accesorios Candados	1320
Accesorios Carburadores	121
Accesorios Carrocerìa	1093
Accesorios Centralinas Electronicas	640
Accesorios Chasis	1334
Accesorios Cojinetes de Dirección	1262
Accesorios Cubiertas del Ventilador	289
Accesorios Cuentakilómetros	1267
Accesorios Culatas	183
Accesorios Depositos Aceite	242
Accesorios Depositos de Gasolina	111
Accesorios Ejes de Transmisión	955
Accesorios Escapes	296
Accesorios Espejos	1057
Accesorios Grifos de Gasolina	107
Accesorios Mandos	1194
Accesorios Manetas	1181
Accesorios Motor	292
Accesorios Pedales	1323
Accesorios Pilotos y Intermitentes	565
Accesorios Piñones de Arranque	265
Accesorios Poleas	950
Accesorios Puños	1214
Accesorios Sistema de Frenos	528
Accesorios Tambores de Freno	523
Accesorios Transmisión	961
Accesorios Tubos Gasolina	115
Accesorios Volante, Rotores y Estators	706
Accesorios Zapatas de Freno	491
Adaptadores Espejos	1056
Alfombrillas	1071
Amortiguadores	1340
Amortiguadores de Asiento	1329
Aplicaciones Pastillas y Zapatas de Freno	308
Arrancadores de Baterias	750
B	
Bandas Luminosas	585
Baterias de Litio	732
Baterias de Plomo	742
Baterias Precargadas	739
Bobinas	641
Bombas de Aceite	243
Bombas de Gasolina	88
Bombas Freno	527
Bordones Chasis Vespa	1068
Botones	587
Bujias	530
C	
Caballetes Centrales	1226
Caballetes de Competicion	1510
Caballetes Laterales	1215
Cabeza de Horquillas	1246
Cableados	719
Cables de Transmisión	1272
Cables de Transmisión Ape	1298
Cadenas Bomba Aceite	244
Cadenas de Distribucion	267
Cadenas de Transmision	814
Cadenas y Candados	1499
Camaras	1492
Campanas de Embrague	842
Candados	1313
Carenados de Cilindro	288
Cargadores de Baterias	747
Centralinas Electronicas	631
Cerraduras de Contacto	708
Cigueñales	124
Cilindros Frenos	524
Cintas de Llanta	1493
Claxons	596
Cojinetes de Dirección	1248
Colector Aspiracion-Escape	63
Colectores de Escape	299
Condensadores	721
Conductos de Cables	1309
Connectores	723
Correas de Distribucion	282
Correas de Transmision	852
Correas Mezclador	122
Crestas Guardabarros	1062
Cubiertas del Ventilador	289
Cubiertas del Volante	1065
Cubre Direccion	1066
Cubre Manillares	1063
Cuentakilómetros	1264
Culatas	181
D	
Depositos Aceite	241
Depositos de Gasolina	110
Desviadores Luces	592
Discos de Embrague	957
Discos de Freno	492
E	
Ejes de Transmisión	954
Enganches Cadena de Distribucion	280
Enganches Cadenas de Transmision	823
Engranajes Arranque	257
Engranajes Cuentakm	1270
Escapes	294
Eslingas para Transporte	1512
Esparragos Motor	285
Espejos	968
Estators	686
F	
Filtros de Aire	16
Filtros Gasolina	108
Fitros de Aceite	187
Fundas Moto	1513
Fusibles	630
G	
Goma de Aspiracion	79
Gomas Antivibración	1090
Grifos y Bombas de Gasolina	103
Grupo Termico	155
Guardabarros	1058
H	
Herramientas	1539
Horquillas	1245
I	
Intermitentes	548
Interruptores	600
Interruptores de Arranque	717
Interruptores Intermitentes	590
J	
Jaula de Agujas	1422
Juntas	1426
K	
Kit de Conversion LED	1514
Kit de Primeros Auxilios	1521
Kit Embrague y Campana	851
Kit Engranajes Arranque	260
Kit Guias Cadenas	281
Kit Horquilla	1410
Kit JT Cadena - Corona - Piñon	752
Kit Repara Nuematicos	1515
Kits Cables de Transmisión	1304
Kits de Poleas Motrizes	949
Kits Revision Bomba de Agua	245
Kits Revision Eje Motor	151
Kits Revision Scooter	1496
L	
Lamparas	572
Letreros - Logotipos - Emblemas	1073
Limpiaparabrisas	1089
Llantas	1327
Llaves de Contacto	726
Lubricantes y Aceites	1578
M	
Mandos Gas	1188
Manetas	1098
Manillares	1182
Membrana Carburador	116
Mordazas Embragues	845
Motores de Arranque	673
Muelles de Arranque	266
Muelles Embrague (Vespa-Ape)	958
N	
Neumaticos	1480
O	
O-Rings	1477
P	
Parejas Cables de Transmisión (Vespa-Ape)	959
Pastillas de Freno	425
Pedales de Arranque	1324
Pick Up	707
Pilotos	542
Piñones Cuentakm	1269
Piñones de Arranque	262
Pistones - Aros de Piston	184
Plásticos de Chasis	1086
Poleas	898
Portaequipajes	1508
Portaescobillas	685
Portalamparas	570
Portamanetas	1185
Portamatriculas	1085
Productos para limpiar	1537
Productos para Taller	1524
Puños	1197
R	
Redes de Carga	1509
Registros de Cables	1310
Reguladores de Tension	658
Relés	606
Remaches en plastico	1091
Reposapiés y Pedales	1322
Resistencias	605
Retenes	1458
Rodamientos de Bolas	1414
Rodillos	922
Rotores	700
Ruedas Libres de Arranque	252
S	
Selectores Cambio (Vespa-Ape)	960
Sensores / Termostatos	611
Silentbloc Motor	290
Sondas Lambda	300
T	
Tambores de Freno	522
Tampones	291
Terminales Vainas Cables	1312
Tester de Baterias	749
Toberas de Aspiracion / Fuelles de Admision	85
Tomas de Corriente	730
Tornilleria	1575
Tubos de Horquillas	1247
Tubos Gasolina	113
Tubos Mandos	1192
Tulipas	556
Tulipas de Pilotos	563
V	
Vainas Cables	1311
Valvulas	1494
Volante completo	701
Z	
Zapatas Freno	486

ÍNDICE

SISTEMA DE ADMISION
Colector Aspiracion-Escape 63
Filtros de Aire 16
Goma de Aspiracion 79
Toberas de Aspiracion / Fuelles de Admision 85

SISTEMA DE COMBUSTIBLE
Accesorios Carburadores 121
Accesorios Depositos de Gasolina 111
Accesorios Grifos de Gasolina 107
Accesorios Tubos Gasolina 115
Bombas de Gasolina 88
Correas Mezclador 122
Depositos de Gasolina 110
Filtros Gasolina 108
Grifos y Bombas de Gasolina 103
Membrana Carburador 116
Tubos Gasolina 113

MOTOR
Accesorios Cubiertas del Ventilador 289
Accesorios Culatas 183
Accesorios Depositos Aceite 242
Accesorios Motor 292
Accesorios Piñones de Arranque 265
Bombas de Aceite 243
Cadenas Bomba Aceite 244
Cadenas de Distribucion 267
Carenados de Cilindro 288
Cigueñales 124
Correas de Distribucion 282
Cubiertas del Ventilador 289
Culatas 181
Depositos Aceite 241
Enganches Cadena de Distribucion 280
Engranajes Arranque 257
Esparragos Motor 285
Fitros de Aceite 187
Grupo Termico 155
Kit Engranajes Arranque 260
Kit Guias Cadenas 281
Kits Revision Bomba de Agua 245
Kits Revision Eje Motor 151
Muelles de Arranque 266
Piñones de Arranque 262
Pistones - Aros de Piston 184
Ruedas Libres de Arranque 252
Silentbloc Motor 290
Tampones 291

SISTEMA DE ESCAPE
Accesorios Escapes 296
Colectores de Escape 299
Escapes 294
Sondas Lambda 300

SISTEMA DE FRENADOS
Accesorios Sistema de Frenos 528
Accesorios Tambores de Freno 523
Accesorios Zapatas de Freno 491
Aplicaciones Pastillas y Zapatas de Freno 308
Bombas Freno 527
Cilindros Frenos 524
Discos de Freno 492
Pastillas de Freno 425
Tambores de Freno 522
Zapatas Freno 486

INSTALACION ELECTRICA
Accesorios Bujias 538
Accesorios Cableados 720
Accesorios Centralinas Electronicas 640
Accesorios Pilotos y Intermitentes 565
Accesorios Volante, Rotores y Estators 706
Bandas Luminosas 585
Bobinas 641
Botones 587
Bujias 530
Cableados 719
Centralinas Electronicas 631
Cerraduras de Contacto 708
Claxons 596
Condensadores 721
Connectores 723
Desviadores Luces 592
Estators 686
Fusibles 630
Intermitentes 548
Interruptores 600
Interruptores de Arranque 717
Interruptores Intermitentes 590
Lamparas 572
Llaves de Contacto 726
Motores de Arranque 673
Pick Up 707
Pilotos 542
Portaescobillas 685
Portalamparas 570
Reguladores de Tension 658
Relés 606
Resistencias 605
Rotores 700
Sensores / Termostatos 611
Tomas de Corriente 730
Tulipas 556
Tulipas de Pilotos 563
Volante completo 701

BATERIAS
Accesorios Baterias 746
Arrancadores de Baterias 750
Baterias de Litio 732
Baterias de Plomo 742
Baterias Precargadas 739
Cargadores de Baterias 747
Tester de Baterias 749

TRANSMISIÓN
Accesorios Campanas y Mordazas 825
Accesorios Ejes de Transmisión 955
Accesorios Poleas 950
Accesorios Transmisión 961
Cadenas de Transmision 814
Campanas de Embrague 842
Correas de Transmision 852
Discos de Embrague 957
Ejes de Transmisión 954
Enganches Cadenas de Transmision 823
Kit Embrague y Campana 851
Kit JT Cadena - Corona - Piñon 752
Kits de Poleas Motrizes 949
Mordazas Embragues 845
Muelles Embrague (Vespa-Ape) 958
Parejas Cables de Transmisión (Vespa-Ape) 959
Poleas 898
Rodillos 922
Selectores Cambio (Vespa-Ape) 960

CARROCERIA
Accesorios Carrocerìa 1093
Accesorios Espejos 1057
Adaptadores Espejos 1056
Alfombrillas 1071
Bordones Chasis Vespa 1068
Crestas Guardabarros 1062
Cubiertas del Volante 1065
Cubre Direccion 1066
Cubre Manillares 1063
Espejos 968
Gomas Antivibración 1090
Guardabarros 1058
Letreros - Logotipos - Emblemas 1073
Limpiaparabrisas 1089
Plásticos de Chasis 1086
Portamatriculas 1085
Remaches en plastico 1091

CHASIS
Abrazaderas de Cables 1308
Accesorios Asientos 1333
Accesorios Caballetes 1241
Accesorios Cables de Transmisión 1307
Accesorios Candados 1320
Accesorios Chasis 1334
Accesorios Cojinetes de Dirección 1262
Accesorios Cuentakilómetros 1267
Accesorios Mandos 1194
Accesorios Manetas 1181
Accesorios Pedales 1323
Accesorios Puños 1214
Amortiguadores de Asiento 1329
Caballetes Centrales 1226
Caballetes Laterales 1215
Cabeza de Horquillas 1246
Cables de Transmisión 1272
Cables de Transmisión Ape 1298
Candados 1313
Cojinetes de Dirección 1248
Conductos de Cables 1309
Cuentakilómetros 1264
Engranajes Cuentakm 1270
Horquillas 1245
Kits Cables de Transmisión 1304
Llantas 1327
Mandos Gas 1188
Manetas 1098
Manillares 1182
Pedales de Arranque 1324
Piñones Cuentakm 1269
Portamanetas 1185
Puños 1197
Registros de Cables 1310
Reposapiés y Pedales 1322
Terminales Vainas Cables 1312
Tubos de Horquillas 1247
Tubos Mandos 1192
Vainas Cables 1311

SUSPENSIONES
Accesorios Amortiguadores - Suspensiones 1405
Amortiguadores 1340
Kit Horquilla 1410

COJINETES
Jaula de Agujas 1422
Rodamientos de Bolas 1414

SISTEMA DE RETENES
Juntas 1426
O-Rings 1477
Retenes 1458

NEUMATICOS
Camaras 1492
Cintas de Llanta 1493
Neumaticos 1480
Valvulas 1494

ACCESORIOS
Accesorios Caballetes de Competicion 1511
Caballetes de Competicion 1510
Cadenas y Candados 1499
Eslingas para Transporte 1512
Fundas Moto 1513
Kit de Conversion LED 1514
Kit de Primeros Auxilios 1521
Kit Repara Nuematicos 1515
Kits Revision Scooter 1496
Portaequipajes 1508
Redes de Carga 1509

TALLER
Herramientas 1539
Productos para limpiar 1537
Productos para Taller 1524
Tornilleria 1575

LUBRICANTES Y PRODUCTOS QUIMICOS
Lubricantes y Aceites 1578

INDEX

A

Accessoires Amortisseurs - Suspensions 1405
Accessoires Arbres Transmission 955
Accessoires Batteries 746
Accessoires Béquilles 1241
Accessoires Béquilles de Stand 1511
Accessoires Bougies 538
Accessoires Câblages 720
Accessoires Câbles de Transmission 1307
Accessoires Capots du Volant 289
Accessoires Carburateur 121
Accessoires Carrosserie 1093
Accessoires CDI 640
Accessoires Chassis 1334
Accessoires Cloches et Embrayages 825
Accessoires Compteurs 1267
Accessoires Contrôles 1194
Accessoires Culasses 183
Accessoires de Selles 1333
Accessoires Frein à Tambour 523
Accessoires Leviers 1181
Accessoires Machoires de Freins 491
Accessoires Moteur 292
Accessoires Noix de Kick 265
Accessoires Optiques de phare et Clignotants 565
Accessoires Pédales 1323
Accessoires Poignées 1214
Accessoires Pots d'Echappement 296
Accessoires Poulies 950
Accessoires Réservoir de Carburant 111
Accessoires Réservoirs Huile 242
Accessoires Rétroviseurs 1057
Accessoires Robinet - Pompe à Essence 107
Accessoires Roulements de Direction Moto 1262
Accessoires Serrures 1320
Accessoires Système de Freinage 528
Accessoires Transmission 961
Accessoires Tuyaux Essence 115
Accessoires Volants Magnetique, Rotors et Stators 706
Adaptateurs Rétroviseurs 1056
Amortisseurs 1340
Amortisseurs de selle 1329
Ampoules 572
Applications Plaquettes et Machoires de Freins 308
Arbres de Transmission 954

B

Balais Essuie-Glace 1089
Bandes Lumineuses 585
Batteries à Lithium 732
Batteries au Plomb-Acide 742
Batteries Pré-chargées 739
Béquilles Centrales 1215
Béquilles de Stand 1510
Béquilles Latérales 1226
Bobines 641
Bougies 530
Boutons 587

C

Câblages 719
Câbles de Transmission 1272
Câbles de Transmission Ape 1298
Cabochons de Clignotant 556
Cabochons de Optiques 563
Caches Cylindre 288
Caches Direction 1066
Caoutchouc d'Admission / Manchon Vanne 85
Caoutchoucs Anti-Vibrations 1090
Capots du Volant 289
Capteur 707
Capteurs / Thermostats 611
CDI 631
Chaînes de Distribution 267
Chaînes de Transmission 814
Chambres à Air 1492
Chargeurs des Batteries 747
Clapets 79
Clignotants 548
Cloches d'Embrayage 842
Collecteur d'Échappement 299
Commutateurs 600
Commutateurs de Clignotants 590
Commutateurs de Demarrage 717
Commutateurs Feu 592
Compteurs 1264
Condensateur 721
Connecteurs Electriques 723
Contacteurs 708
Contours Chassis Vespa 1068
Contrôles Gaz et Changement Vitesse 1192
Couple Câbles de Transmission (Vespa-Ape) 959
Courroie de Mélangeur 122
Courroies de Distribution 282
Courroies de Transmission 852
Couvertures Volant Moteur 1065
Couvres Guidon 1063
Crêtes de Garde-Boue 1062
Culasses 181
Cylindre 155
Cylindres de Frein 524

D

Démarreurs 673
Démarreurs de Batterie 750
Disques d'Embrayage 957
Disques de Frein 492

E

Embouts de Câble 1312
Embrayages 845
Engrenages Compteur Vitesse 1270
Equipement de Démarrage 257

F

Fiches pour Ampoules 570
Filets de Fret 1509
Filtre Essence 108
Filtres à Air 16
Filtres à Huile 187
Fourches 1245
Frein à Tambour 522
Fusibles 630

G

Gaines de Câble 1311
Galets 922
Garde-Boues 1058
Goujons de Moteur 285
Guidons 1182

H

Housses Moto 1513
Huiles et Lubrifiants 1578

J

Jantes 1327
Joints 1426
Joints d'Huile 1458

K

Kicks Demarrage 1324
Kit Câbles de Transmission 1304
Kit de Premiers Secours 1521
Kit de Transformation LED 1514
Kit Démarreurs 260
Kit Embrayage et Cloche 851
Kit Guides Chaines 281
Kit JT Chain - Couronne - Pignon 752
Kit Reparation Pompe à Eau 245
Kit Reparation Vilebrequins 151
Kit Variateur 949
Kits Entretien Scooter 1496
Kits Fourche 1410
Kits Réparation Pneus 1515
Klaxon 596

L

Leviers 1098

M

Machoires de Freins 486
Maillons Connecteur Chaînes 280
Maillons Connecteur Chaînes de Transmission 823
Membrane de Carburateur 116

N

Noix de Kick 262

O

O-Rings 1477
Optiques de phare 542
Outils 1539
Outils d'Atelier 1524

P

Passe-Fils 1309
Pignons Compteurs Vitesse 1269
Pipes d'Admission 63
Pistons - Segments de Pistons 184
Plaques - Insignes - Emblèmes 1073
Plaquettes de Frein 425
Plastiques Châssis 1086
Pneus 1480
Poignées 1197
Poignèes de Gaz 1188
Pompe à Huile 243
Pompe Huile Chaines 244
Pompes a Essence 88
Pompes Freins 527
Porte-bagage 1508
Portes Plaque 1085
Portes-Balais 685
Pots d'Echappement 294
Poulies 898
Prises de Courant 730
Produits de Nettoyage 1537

R

Registres de Câble 1310
Règulateurs de Tension 658
Relais 606
Repose-Pieds et Pédales 1322
Réservoir de carburant 110
Réservoirs Huile 241
Résistances 605
Ressort de Kick 266
Ressorts d'Embrayage (Vespa-Ape) 958
Rétroviseurs 968
Rivets Plastiques 1091
Robinet - Pompe a Essence 103
Rotors 700
Roues Libres Demarreur 252
Roulements à Billes 1414
Roulements à Rouleaux 1422
Roulements de Direction 1248
Rubans de Jante 1493

S

Sangles de Transport 1512
Secteurs Vitesse (Vespa-Ape) 960
Serre-Câbles 1308
Serrures 1313
Serrures et Chaînes 1499
Silentbloc Moteur 290
Sondes Lambda 300
Stators 686
Supports Leviers 1185

T

Tampons 291
Tapis de Sol 1071
Testeurs de Batterie 749
Têtes de Fourche 1246
Tiges de Fourche 1247
Tuyaux Essence 113

V

Valves 1494
Vilebrequins 124
Vis platiné 726
Visserie 1575
Volants Magnetique 701

SYSTÈME D'ADMISSION
Caoutchouc d'Admission / Manchon Vanne 85
Clapets 79
Filtres à Air 16
Pipes d'Admission 63

SYSTÈME D'ALIMENTATION
Accessoires Carburateur 121
Accessoires Réservoir de Carburant 111
Accessoires Robinet - Pompe à Essence 107
Accessoires Tuyaux Essence 115
Courroie de Mélangeur 122
Filtre Essence 108
Membrane de Carburateur 116
Pompes a Essence 88
Réservoir de carburant 110
Robinet - Pompe a Essence 103
Tuyaux Essence 113

MOTEUR
Accessoires Capots du Volant 289
Accessoires Culasses 183
Accessoires Moteur 292
Accessoires Noix de Kick 265
Accessoires Réservoirs Huile 242
Caches Cylindre 288
Capots du Volant 289
Chaînes de Distribution 267
Courroies de Distribution 282
Culasses 181
Cylindre 155
Equipement de Démarrage 257
Filtres à Huile 187
Goujons de Moteur 285
Kit Démarreurs 260
Kit Guides Chaines 281
Kit Reparation Pompe à Eau 245
Kit Reparation Vilebrequins 151
Maillons Connecteur Chaînes 280
Noix de Kick 262
Pistons - Segments de Pistons 184
Pompe à Huile 243
Pompe Huile Chaines 244
Réservoirs Huile 241
Ressort de Kick 266
Roues Libres Demarreur 252
Silentbloc Moteur 290
Tampons 291
Vilebrequins 124

SYSTÈME D'ÉCHAPPEMENT
Accessoires Pots d'Echappement 296
Collecteur d'Échappement 299
Pots d'Echappement 294
Sondes Lambda 300

SYSTÈME DE FREINAGE
Accessoires Frein à Tambour 523
Accessoires Machoires de Freins 491
Accessoires Système de Freinage 528
Applications Plaquettes et Machoires de Freins 308
Cylindres de Frein 524
Disques de Frein 492
Frein à Tambour 522
Machoires de Freins 486
Plaquettes de Frein 425
Pompes Freins 527

SYSTÈME ÉLECTRIQUE
Accessoires Bougies 538
Accessoires Câblages 720
Accessoires CDI 640
Accessoires Optiques de phare et Clignotants 565
Accessoires Volants Magnetique, Rotors et Stators 706
Ampoules 572
Bandes Lumineuses 585
Bobines 641
Bougies 530
Boutons 587
Câblages 719
Cabochons de Clignotant 556
Cabochons de Optiques 563
Capteur 707
Capteurs / Thermostats 611
CDI 631
Clignotants 548
Commutateurs 600
Commutateurs de Clignotants 590
Commutateurs de Demarrage 717
Commutateurs Feu 592
Condensateur 721
Connecteurs Electriques 723
Contacteurs 708
Démarreurs 673
Fiches pour Ampoules 570
Fusibles 630
Klaxon 596
Optiques de phare 542
Portes-Balais 685
Prises de Courant 730
Règulateurs de Tension 658
Relais 606
Résistances 605
Rotors 700
Stators 686
Vis platiné 726
Volants Magnetique 701

BATTERIES
Accessoires Batteries 746
Batteries à Lithium 732
Batteries au Plomb-Acide 742
Batteries Pré-chargées 739
Chargeurs des Batteries 747
Démarreurs de Batterie 750
Testeurs de Batterie 749

TRANSMISSION
Accessoires Arbres Transmission 955
Accessoires Cloches et Embrayages 825
Accessoires Poulies 950
Accessoires Transmission 961
Arbres de Transmission 954
Chaînes de Transmission 814
Cloches d'Embrayage 842
Couple Câbles de Transmission (Vespa-Ape) 959
Courroies de Transmission 852
Disques d'Embrayage 957
Embrayages 845
Galets 922
Kit Embrayage et Cloche 851
Kit JT Chain - Couronne - Pignon 752
Kit Variateur 949
Maillons Connecteur Chaînes de Transmission 823
Poulies 898
Ressorts d'Embrayage (Vespa-Ape) 958
Secteurs Vitesse (Vespa-Ape) 960

CARROSSERIE
Accessoires Carrosserie 1093
Accessoires Rétroviseurs 1057
Adaptateurs Rétroviseurs 1056
Balais Essuie-Glace 1089
Caches Direction 1066
Caoutchoucs Anti-Vibrations 1090
Contours Chassis Vespa 1068
Couvertures Volant Moteur 1065
Couvres Guidon 1063
Crêtes de Garde-Boue 1062
Garde-Boues 1058
Plaques - Insignes - Emblèmes 1073
Plastiques Châssis 1086
Portes Plaque 1085
Rétroviseurs 968
Rivets Plastiques 1091
Tapis de Sol 1071

CHASSIS
Accessoires Béquilles 1241
Accessoires Câbles de Transmission 1307
Accessoires Chassis 1334
Accessoires Compteurs 1267
Accessoires Contrôles 1194
Accessoires de Selles 1333
Accessoires Leviers 1181
Accessoires Pédales 1323
Accessoires Poignées 1214
Accessoires Roulements de Direction Moto 1262
Accessoires Serrures 1320
Amortisseurs de selle 1329
Béquilles Centrales 1215
Béquilles Latérales 1226
Câbles de Transmission 1272
Câbles de Transmission Ape 1298
Compteurs 1264
Contrôles Gaz et Changement Vitesse 1192
Embouts de Câble 1312
Engrenages Compteur Vitesse 1270
Fourches 1245
Gaines de Câble 1311
Guidons 1182
Jantes 1327
Kicks Demarrage 1324
Kit Câbles de Transmission 1304
Leviers 1098
Passe-Fils 1309
Pignons Compteurs Vitesse 1269
Poignées 1197
Poignées de Gaz 1188
Registres de Câble 1310
Repose-Pieds et Pédales 1322
Roulements de Direction 1248
Serre-Câbles 1308
Serrures 1313
Supports Leviers 1185
Têtes de Fourche 1246
Tiges de Fourche 1247

SUSPENSIONS
Accessoires Amortisseurs - Suspensions 1405
Amortisseurs 1340
Kits Fourche 1410

ROULEMENT
Roulements à Billes 1414
Roulements à Rouleaux 1422

SYSTÈME DE JOINTS
Joints 1426
Joints d'Huile 1458
O-Rings 1477

PNEUS
Chambres à Air 1492
Pneus 1480
Rubans de Jante 1493
Valves 1494

ACCESSOIRES
Accessoires Béquilles de Stand 1511
Béquilles de Stand 1510
Filets de Fret 1509
Housses Moto 1513
Kit de Premiers Secours 1521
Kit de Transformation LED 1514
Kits Entretien Scooter 1496
Kits Réparation Pneus 1515
Porte-bagage 1508
Sangles de Transport 1512
Serrures et Chaînes 1499

ATELIER
Outils 1539
Outils d'Atelier 1524
Produits de Nettoyage 1537
Visserie 1575

LUBRIFIANTS ET PRODUITS CHIMIQUES
Huiles et Lubrifiants 1578

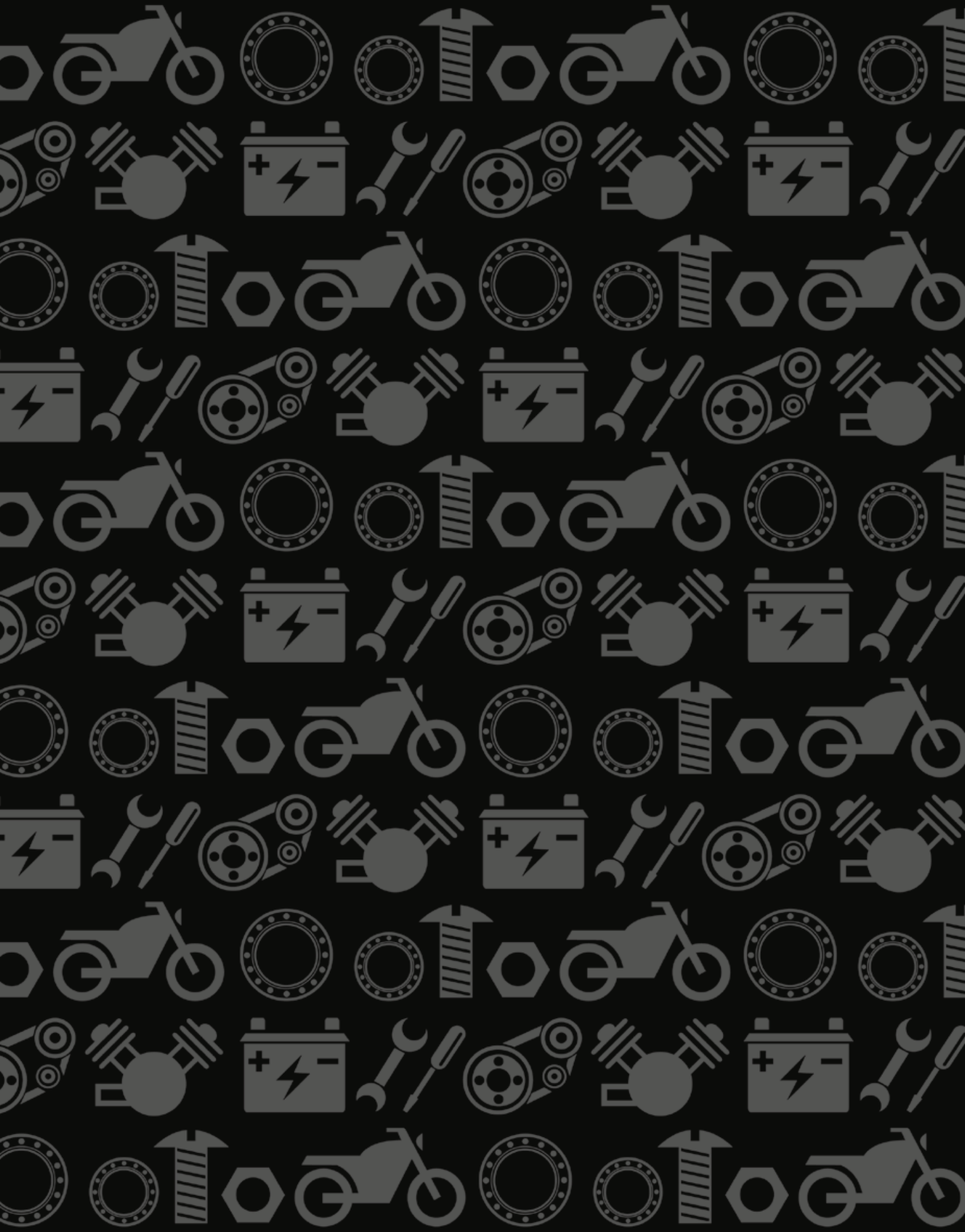

ASPIRAZIONE
INTAKE SYSTEM
SISTEMA DE ADMISION
SYSTÈME D'ADMISSION



Filtres à Air
Pipes d'Admission
Clapets
Caoutchouc d'Admission / Manchon Vanne



Filtros de Aire
Colector Aspiracion-Escape
Goma de Aspiracion
Toberas de Aspiracion / Fuelles de Admision



Air Filters
Inlet Pipes
Reed Valves
Sleeves / Intake Bellows



FILTRI ARIA 16
COLLETTORI ASPIRAZIONE 63
PACCHI LAMELLARI 79
SOFFIETTI / MANICOTTI 85

Modello *Model*	CC	Da *From*	A *To*	OEM	Codice RMS *RMS Code*
APRILIA					
Amico	50	1994	1994	AP8201378	**100600011**
Amico	50	1996	1998	AP8201378	**100600011**
Amico Gl-Gle	50	1993	1995	AP8201378	**100600011**
Amico Lx- Sport-Cat	50	1992	1993	AP8201378	**100600011**
Area 51	50	1998	2000	AP8201683	**100600031**
Gulliver	50	1995	1998	AP8201683	**100600031**
Gulliver Lc	50	1996	1998	AP8201683	**100600031**
Mojito Custom	50	1999	2003	AP8202138	**100600951**
Mojito Retro	50	1999	2003	AP8202138	**100600951**
Rally	50	1995	2003	AP8201683	**100600031**
Rally Liquid Cooled	50	1996	1999	AP8201683	**100600031**
Scarabeo	50	1993	2005	AP8201583	**100600021**
Scarabeo 4T	50	2002	2006	AP8202249	**100602101**
Scarabeo 4T	50	2002	2006	AP8570092	**100601181 Secondario**
Scarabeo 4T 4V	50	2010	2012	AP8202249	**100602101**
Scarabeo 4T 4V	50	2010	2012	832972	**100601181 Secondario**
Scarabeo 4T 4V	50	2014	2014	AP8202249	**100602101**
Scarabeo 4T 4V	50	2014	2014	832972	**100601181 Secondario**
Scarabeo 4T 4V Net	50	2009	2009	AP8202249	**100602101**
Scarabeo 4T 4V Net	50	2009	2009	832972	**100601181 Secondario**
Scarabeo 4T 4V Net	50	2010	2010	AP8202249	**100602101**
Scarabeo 4T 4V Net	50	2010	2010	832972	**100601181 Secondario**
Scarabeo 4T Restyling Eu3	50	2006	2009	AP8202249	**100602101**
Scarabeo 4T Restyling Eu3	50	2006	2009	832972	**100601181 Secondario**
Scarabeo Ditech	50	2001	2004	AP8202262	**100602091**
Scarabeo Quattro	50	2009	2009	832972	**100601181 Secondario**
Scarabeo Quattro	50	2009	2009	AP8202249	**100602101 Aspirazione**
Sonic	50	1998	2007	AP8201683	**100600031**
Sonic Gp	50	1998	2008	AP8201683	**100600031**
Sr	50	1993	1993	AP8201378	**100600011**
Sr	50	1994	1996	AP8201683	**100600031**
Sr Ditech Euro 2	50	2002	2004	AP8202302	**100601301**
Sr H2O Ditech E Carburatore	50	2000	2004	AP8202281	**100601301**
Sr Iniezione E Carburatore	50	2014	2014	AP8202302	**100601301**
Sr Liquid Cooled	50	1994	1996	AP8201683	**100600031**
Sr Motard 4T 4V	50	2013	2014	832972	**100601181 Secondario**
Sr R	50	2004	2009	AP8202302	**100601301**
Sr R	50	2004	2009	AP8249582	**100601301**
Sr R	50	2004	2009	AP8202443	**100601311**
Sr R Factory Ie E Carburatore	50	2010	2014	AP8202302	**100601301**
Sr R Factory Ie E Carburatore	50	2010	2014	AP8249582	**100601301**
Sr R Factory Ie E Carburatore	50	2010	2014	AP8202443	**100601311**
Sr R Factory Motore Aprilia	50	2005	2005	AP8202443	**100601311**
Sr Stealth	50	1997	2000	AP8201683	**100600031**
Sr Street	50	2003	2012	AP8202302	**100601301**
Sr Www	50	1997	2001	AP8201683	**100600031**
Scarabeo 4T	100	2001	2005	AP8570092	**100601181 Secondario**
Scarabeo 4T	100	2001	2005	AP8202249	**100602101 Aspirazione**
Scarabeo 4T	100	2010	2012	832972	**100601181 Secondario**
Scarabeo 4T	100	2010	2012	AP8202249	**100602101 Aspirazione**
Scarabeo 4T	100	2014	2014	832972	**100601181 Secondario**
Scarabeo 4T	100	2014	2014	AP8202249	**100602101 Aspirazione**
Scarabeo 4T Net	100	2009	2009	832972	**100601181 Secondario**
Scarabeo 4T Net	100	2009	2009	AP8202249	**100602101 Aspirazione**
Scarabeo 4T Net Eu3	100	2010	2010	832972	**100601181 Secondario**
Scarabeo 4T Net Eu3	100	2010	2010	AP8202249	**100602101 Aspirazione**
Scarabeo 4T Restyling	100	2006	2009	832972	**100601181 Secondario**
Scarabeo 4T Restyling	100	2006	2009	AP8202249	**100602101 Aspirazione**
Atlantic	125	2003	2005	AP8580172	**100600991**
Atlantic	125	2003	2005	AP8577006	**100602561 Cinghia**
Atlantic Eu3	125	2010	2012	829258	**100600991**
Atlantic Eu3	125	2010	2012	842093	**100602561 Cinghia**
Atlantic Eu3 125-250	125	2006	2008	AP8104878	**100600991**
Leonardo	125	1996	2002	AP8102582	**100600041**
Leonardo St	125	2001	2004	AP8102582	**100600041**
Mojito	125	2003	2007	AP8577006	**100602561 Cinghia**
Mojito Retro' - Custom	125	1999	2001	AP8102965	**100600861**
Scarabeo	125	2003	2006	AP8102832	**100600651**
Scarabeo	125	2004	2006	AP8577006	**100602561 Cinghia**
Scarabeo Ie Light	125	2009	2010	JC13721X92000	**100602471**
Scarabeo Ie Light 125-200	125	2011	2012	JC13721X92000	**100602471**
Scarabeo Light	125	2007	2008	JC13721X92000	**100602471**
Scarabeo Motore Piaggio Eu3	125	2006	2006	AP8102832	**100600651**
Scarabeo Motore Piaggio Eu3	125	2006	2006	AP8577006	**100602561 Cinghia**
Scarabeo Motore Rotax	125	1999	2004	AP8102832	**100600651**
Sport City	125	2004	2006	AP8104878	**100600991**
Sport City	125	2004	2006	AP8577006	**100602561 Cinghia**
Sport City Cube	125	2008	2010	829258	**100600991**
Sport City Cube	125	2008	2010	842093	**100602561 Cinghia**
Sport City Euro3	125	2006	2008	AP8580172	**100600991**
Sport City Euro3	125	2006	2008	AP8577006	**100602561 Cinghia**
Sport City One 4T Euro3	125	2008	2011	842093	**100602561 Cinghia**
Sport City Street	125	2012	2012	829258	**100600991**
Sport City Street	125	2012	2012	842093	**100602561 Cinghia**
Sr	125	1999	2001	AP8102943	**100600121**
Sr Max	125	2011	2014	829258	**100600991**
Sr Motard	125	2012	2014	842093	**100602561 Cinghia**
Scarabeo Ie Light 125-200	200	2011	2012	JC13721X92000	**100602471**
Atlantic Eu3 125-250	250	2006	2008	AP8104878	**100600991**
Atlantic Eu3 125-250	250	2006	2008	AP8577006	**100602561 Cinghia**
Leonardo	250	1999	2001	AP8102860	**100600661**
Leonardo St	250	2001	2001	AP8102860	**100600661**
Scarabeo Light	250	2006	2008	AP8104878	**100600991**



NYPSO

Modello *Model*	CC	Da *From*	A *To*	OEM	Codice RMS *RMS Code*
Scarabeo Light	250	2006	2008	AP8577006	**100602561 Cinghia**
Sport City Cube	250	2008	2012	829258	**100600991**
Sport City Cube	250	2008	2012	842093	**100602561 Cinghia**
Atlantic	300	2010	2011	829258	**100600991**
Atlantic	300	2010	2011	842093	**100602561 Cinghia**
Leonardo	300	2002	2004	AP8102860	**100600661**
Scarabeo Light	300	2009	2010	829258	**100600991**
Scarabeo Light	300	2009	2010	842093	**100602561 Cinghia**
Sport City Street	300	2012	2012	829258	**100600991**
Sport City Street	300	2012	2012	842093	**100602561 Cinghia**
Sr Max	300	2011	2014	829258	**100600991**
Sr Max	300	2011	2014	842093	**100602561 Cinghia**
Atlantic	500	2001	2004	AP8104242	**100601151**
Atlantic Sprint 400-500	500	2005	2008	AP8580172	**100600991**
Scarabeo	500	2003	2006	AP8104242	**100601151**
Scarabeo Light 400-500	500	2006	2008	829258	**100600991**
Pegaso 3	650	1997	2000	AP8102715	**100602230**
Pegaso Ie	650	2001	2004	AP8102715	**100602230**
ATALA					
At10 50 Ac Byte	50	1997	2001	-	**100600051**
At12 50 Ac Hacker	50	1996	1999	-	**100600051**
At12 50 Ac Hacker Racing	50	1996	1999	-	**100600051**
At14 50 Lc Hacker Racing	50	1997	1999	-	**100600051**
Skeggia 50 Ac	50	1999	2000	-	**100600051**
BENELLI					
491 Gt	50	1998	1999	R72340011A0	**100600061**
491 Racing	50	1998	1999	R72340011A0	**100600061**
491 Rr	50	1999	2001	R72340011A0	**100600061**
491 Sp	50	1999	1999	R72340011A0	**100600061**
491 Sport	50	1998	1999	R72340011A0	**100600061**
491 St	50	1999	2001	R72340011A0	**100600061**
K2	50	1998	2001	R72340011A0	**100600061**
K2 Liquid Cooled	50	1998	2001	R72340011A0	**100600061**
Naked	50	2002	2002	R72340011A0	**100600061**
K2	100	1999	2001	R72340011A0	**100600061**
Adiva 125	125	2001	2002	R72340061A0	**100600421**
Adiva 150	150	2001	2002	R72340061A0	**100600421**
Velvet	250	1999	2001	R72317001AZ	**100600331**
Velvet Touring	250	2002	2003	R72317001AZ	**100600331**
BETA					
Ark 50 Ac	50	2004	2008	-	**100600061**
Ark 50 Lc	50	1997	2008	-	**100600061**
Eikon 50 Lc	50	1999	2006	-	**100600061**
BMW					
R 45 N	450	1978	1985	13721254382	**100602250**
R 45 S	450	1978	1985	13721254382	**100602250**
R 50 /5	500	1969	1973	13721254382	**100602250**
R 60 /5	600	1969	1973	13721254382	**100602250**
R 60 /6	600	1973	1976	13721254382	**100602250**
R 60 /7	600	1976	1980	13721254382	**100602250**
F 650 650	650	1993	1999	13722345027	**100602220**
F 650 650 St	650	1997	1999	13722345027	**100602220**
F 650 800 Gs	650	2008	2012	13718529998	**100603080**
F 650 800 Gs Abs	650	2008	2012	13718529998	**100603080**

Modello *Model*	CC	Da *From*	A *To*	OEM	Codice RMS *RMS Code*
R 65 1Serie	650	1978	1980	13721254382	**100602250**
R 65 2Serie	650	1980	1985	13721254382	**100602250**
R 65 Ls	650	1981	1985	13721254382	**100602250**
F 700 800 Gs Abs	700	2013	2017	13718529998	**100603080**
F 700 800 Gs Abs Esa	700	2017	2017	13718529998	**100603080**
R 75 /5	750	1969	1973	13721254382	**100602250**
R 75 /6	750	1973	1976	13721254382	**100602250**
R 75 /7	750	1976	1979	13721254382	**100602250**
F 800 800 Gs	800	2008	2012	13718529998	**100603080**
F 800 800 Gs Abs	800	2008	2017	13718529998	**100603080**
F 800 800 Gs Abs Esa	800	2017	2017	13718529998	**100603080**
F 800 800 Gs Adventure Abs	800	2013	2017	13718529998	**100603080**
F 800 800 Gs Adventure Abs Esa	800	2017	2017	13718529998	**100603080**
F 800 800 Gt Abs	800	2013	2017	13718529998	**100603080**
F 800 800 Gt Abs Esa	800	2017	2017	13718529998	**100603080**
F 800 800 R	800	2009	2012	13718529998	**100603080**
F 800 800 R Abs	800	2009	2017	13718529998	**100603080**
F 800 800 R Abs Esa	800	2017	2017	13718529998	**100603080**
F 800 800 S	800	2006	2010	13718529998	**100603080**
F 800 800 S Abs	800	2007	2010	13718529998	**100603080**
F 800 800 St	800	2006	2012	13718529998	**100603080**
F 800 800 St Abs	800	2007	2012	13718529998	**100603080**
R 80 /7N	800	1977	1980	13721254382	**100602250**
R 80 /7S	800	1977	1980	13721254382	**100602250**
R 80 Rt	800	1982	1984	13721254382	**100602250**
R 850 Gs	850	1998	1999	13711341528	**100603090**
R 850 Gs Abs	850	1998	1999	13711341528	**100603090**
R 850 R	850	2003	2006	13711341528	**100603090**
R 850 R Abs	850	2003	2006	13711341528	**100603090**
R 850 R Cast Wheel	850	1995	2002	13711341528	**100603090**
R 850 R Cast Wheel Abs	850	1998	2001	13711341528	**100603090**
R 850 R Comfort	850	2004	2006	13711341528	**100603090**
R 850 R Comfort Abs	850	2004	2006	13711341528	**100603090**
R 90 /6	900	1973	1976	13721254382	**100602250**
R 90 S	900	1973	1976	13721254382	**100602250**
R 100 /7	1000	1976	1978	13721254382	**100602250**
R 100 Cast Wheel	1000	1981	1984	13721254382	**100602250**
R 100 Cs Clsport	1000	1980	1984	13721254382	**100602250**
R 100 Rs	1000	1976	1984	13721254382	**100602250**
R 100 Rt	1000	1978	1984	13721254382	**100602250**
R 100 S	1000	1976	1980	13721254382	**100602250**
R 100 Spoked Wheel	1000	1981	1984	13721254382	**100602250**
R 100 T Touren	1000	1977	1980	13721254382	**100602250**
CAGIVA					
Progress	50	1997	1999	00G03202251	**100600971**
Progress Lc	50	1998	1999	00G03202251	**100600971**
Cucciolo	125	1998	1999	00G03202251	**100600971**
DERBI					
Atlantis	50	1999	2001	00G03202251	**100600971**
Atlantis 2T	50	2010	2010	487719	**100600921**
Atlantis 2T	50	2010	2010	486942	**100601191 Secondario**
Atlantis 2T Eu2	50	2007	2009	487719	**100600921**
Atlantis 2T Eu2	50	2007	2009	486942	**100601191 Secondario**
Atlantis 4T Eu2	50	2007	2007	431587	**100600461**
Atlantis 4T Eu2	50	2007	2007	832972	**100601181 Secondario**
Atlantis 50-100 4T	50	2004	2006	431587	**100600461**

FILTRI ARIA

AIR FILTERS

Modello *Model*	CC	Da *From*	A *To*	OEM	Codice RMS *RMS Code*
Atlantis 50-100 4T	50	2004	2006	832972	**100601181 Secondario**
Atlantis Lc	50	1999	2001	00G03202251	**100600971**
Atlantis O2	50	2002	2002	487719	**100600921**
Atlantis O2	50	2002	2002	486942	**100601191 Secondario**
Atlantis O2 Bullet	50	2003	2005	487719	**100600921**
Atlantis O2 Bullet	50	2003	2005	486942	**100601191 Secondario**
Atlantis O2 City	50	2003	2006	487719	**100600921**
Atlantis O2 City	50	2003	2006	486942	**100601191 Secondario**
Atlantis O2 Red Bullet	50	2003	2003	487719	**100600921**
Atlantis O2 Red Bullet	50	2003	2003	486942	**100601191 Secondario**
Atlantis O2 Two Chic	50	2005	2005	487719	**100600921**
Atlantis O2 Two Chic	50	2005	2005	486942	**100601191 Secondario**
Boulevard 2T	50	2009	2014	487719	**100600921**
Boulevard 2T	50	2009	2014	486942	**100601191 Secondario**
Boulevard 4T Eu2 25 Km/H	50	2009	2009	843194	**100601161**
Boulevard 4T Eu2 25 Km/H	50	2009	2009	832972	**100601181 Secondario**
Gp1	50	2001	2002	487719	**100600921**
Gp1	50	2001	2002	486942	**100601191 Secondario**
Gp1	50	2003	2003	487719	**100600921**
Gp1	50	2003	2003	486942	**100601191 Secondario**
Gp1 E2	50	2003	2003	487719	**100600921**
Gp1 E2	50	2003	2003	486942	**100601191 Secondario**
Gp1 Open Eu2	50	2006	2009	487719	**100600921**
Gp1 Open Eu2	50	2006	2009	486942	**100601191 Secondario**
Hunter	50	1996	1997	00G03202251	**100600971**
Paddock	50	1998	1999	00G03202251	**100600971**
Predator Lc	50	1998	2001	00G03202251	**100600971**
Predator O2	50	1998	2001	00G03202251	**100600971**
Sonar 2T	50	2009	2009	487719	**100600921**
Sonar 2T	50	2009	2009	486942	**100601191 Secondario**
Variant Sport 2T	50	2012	2012	487719	**100600921**
Variant Sport 2T	50	2012	2012	486942	**100601191 Secondario**
Atlantis	100	2000	2001	00G03202251	**100600971**
Atlantis 50-100 4T	100	2004	2006	431587	**100600461**
Atlantis 50-100 4T	100	2004	2006	832972	**100601181 Secondario**
Boulevard 4T	100	2010	2011	843194	**100601161**
Boulevard 4T	100	2010	2011	832972	**100601181 Secondario**
Boulevard 125-150	125	2002	2004	487401	**100600891**
Boulevard 125-150	125	2003	2004	832703	**100601171 Secondario**
Boulevard 125-150 Eu2	125	2004	2007	487401	**100600891**
Boulevard 125-150 Eu2	125	2004	2007	832703	**100601171 Secondario**
Boulevard 125-150 Eu2	125	2004	2007	842093	**100602561 Cinghia**
Boulevard 4T Eu3	125	2008	2012	843194	**100601161**
Boulevard 4T Eu3	125	2008	2012	832703	**100601171 Secondario**
Gp1 Eu2	125	2006	2006	829258	**100600991**
Gp1 Eu2	125	2006	2006	842093	**100602561 Cinghia**
Gp1 Low Seat 125 Eu3	125	2007	2008	829258	**100600991**
Gp1 Low Seat 125 Eu3	125	2007	2008	842093	**100602561 Cinghia**
Rambla 125-250	125	2008	2009	829258	**100600991**
Rambla 125-250 E3 2Ver	125	2008	2008	829258	**100600991**
Rambla 125-250 E3 2Ver	125	2008	2008	842093	**100602561 Cinghia**
Sonar 4T	125	2009	2011	832703	**100601171 Secondario**
Sonar 4T	125	2009	2011	842093	**100602561 Cinghia**
Variant Sport 4T E3	125	2012	2012	843194	**100601161**
Variant Sport 4T E3	125	2012	2012	832703	**100601171 Secondario**
Variant Sport 4T E3	125	2012	2012	842093	**100602561 Cinghia**
Boulevard 125-150	150	2002	2004	487401	**100600891**
Boulevard 125-150	150	2003	2004	842093	**100602561 Cinghia**
Boulevard 125-150 Eu2	150	2004	2007	487401	**100600891**
Boulevard 4T E3	150	2010	2010	843194	**100601161**
Boulevard 4T E3	150	2010	2010	832703	**100601171 Secondario**
Sonar 4T	150	2009	2009	832703	**100601171 Secondario**
Sonar 4T	150	2009	2009	842093	**100602561 Cinghia**
Boulevard Eu2	200	2005	2006	487401	**100600891**
Boulevard Eu2	200	2005	2006	832703	**100601171 Secondario**
Gp1	250	2006	2007	829258	**100600991**
Gp1	250	2006	2007	840476	**100601221 Secondario**
Gp1	250	2006	2007	842093	**100602561 Cinghia**
Gp1 Low Seat 250 Eu3	250	2007	2008	829258	**100600991**
Gp1 Low Seat 250 Eu3	250	2007	2008	842093	**100602561 Cinghia**
Rambla 125-250	250	2008	2009	829258	**100600991**
Rambla 125-250	250	2008	2009	842093	**100602561 Cinghia**
Rambla 125-250 E3 2Ver	250	2008	2008	829258	**100600991**
Rambla	300	2010	2011	829258	**100600991**
Rambla	300	2010	2011	842093	**100602561 Cinghia**
GILERA					
Dna	50	2000	2002	487719	**100600921**
Dna	50	2000	2002	486942	**100601191 Secondario**
Dna	50	2005	2007	487719	**100600921**
Dna	50	2005	2007	486942	**100601191 Secondario**
Dna Gp Experience	50	2003	2004	487719	**100600921**
Dna Gp Experience	50	2003	2004	486942	**100601191 Secondario**
Easy Moving	50	1995	1996	431838	**100600431**
Ice	50	2001	2005	487719	**100600921**
Ice	50	2001	2005	486942	**100601191 Secondario**
Runner	50	1997	2000	479748	**100600111**
Runner Poggiali	50	2002	2002	487719	**100600921**



NYPSO

Modello *Model*	CC	Da *From*	A *To*	OEM	Codice RMS *RMS Code*
Runner Poggiali	50	2002	2002	486942	**100601191 Secondario**
Runner Purejet	50	2002	2007	479748	**100600111**
Runner Purejet	50	2010	2011	479748	**100600111**
Runner Purejet St	50	2008	2008	479748	**100600111**
Runner Sp	50	2002	2004	487719	**100600921**
Runner Sp	50	2002	2004	486942	**100601191 Secondario**
Runner Sp	50	2005	2006	487719	**100600921**
Runner Sp	50	2005	2006	486942	**100601191 Secondario**
Runner Sp	50	2007	2007	487719	**100600921**
Runner Sp	50	2007	2007	486942	**100601191 Secondario**
Runner Sp	50	2010	2012	487719	**100600921**
Runner Sp	50	2010	2012	486942	**100601191 Secondario**
Runner Sp Special Edition	50	2007	2007	487719	**100600921**
Runner Sp Special Edition	50	2007	2007	486942	**100601191 Secondario**
Runner Sp St & Simoncelli	50	2008	2009	487719	**100600921**
Runner Sp St & Simoncelli	50	2008	2009	486942	**100601191 Secondario**
Stalker	50	1997	2004	479748	**100600111**
Stalker	50	1997	2004	486942	**100601191 Secondario**
Stalker	50	2005	2006	487719	**100600921**
Stalker	50	2005	2006	486942	**100601191 Secondario**
Stalker	50	2007	2008	487719	**100600921**
Stalker	50	2007	2008	486942	**100601191 Secondario**
Stalker	50	2009	2011	487719	**100600921**
Stalker	50	2009	2011	486942	**100601191 Secondario**
Stalker EU2	50	1997	2004	487719	**100600921**
Stalker Naked	50	2008	2008	487719	**100600921**
Stalker Naked	50	2008	2008	486942	**100601191 Secondario**
Stalker Special Edition	50	2007	2008	487719	**100600921**
Stalker Special Edition	50	2007	2008	486942	**100601191 Secondario**
Storm	50	1994	1995	433437	**100600091**
Storm Euro2	50	2007	2007	487719	**100600921**
Storm Euro2	50	2007	2007	486942	**100601191 Secondario**
Typhoon	50	1994	1997	433437	**100600091**
Typhoon X	50	1998	1999	433437	**100600091**
Typhoon Xr	50	2000	2000	433437	**100600091**
Dna 125-180	125	2001	2001	827936	**100600881**
Nexus Euro3	125	2007	2008	829258	**100600991**
Nexus Euro3	125	2007	2008	842093	**100602561 Cinghia**
Nexus Euro3 Ie	125	2008	2010	829258	**100600991**
Runner 4T St Euro3	125	2008	2013	829258	**100600991**
Runner Fx-Fxr 125-180	125	1997	2002	480084	**100600121**
Runner Vx	125	2005	2006	829258	**100600991**
Runner Vx 4T Euro3	125	2006	2007	829258	**100600991**
Runner Vx Race	125	2006	2006	829258	**100600991**
Runner Vx Sc	125	2006	2007	829258	**100600991**
Runner Vx-Vxr 125-180	125	2000	2001	827936	**100600881**
Typhoon	125	1995	1998	478240	**100600081**
Typhoon X-Xr	125	1999	2000	478240	**100600081**

Modello *Model*	CC	Da *From*	A *To*	OEM	Codice RMS *RMS Code*
Dna 125-180	180	2001	2001	827936	**100600881**
Runner Vxr	200	2005	2006	829258	**100600991**
Runner Vxr 4T St Euro3	200	2008	2011	829258	**100600991**
Runner Vxr Euro3	200	2007	2007	829258	**100600991**
Runner Vxr Race	200	2005	2006	829258	**100600991**
Runner Vx-Vxr 125-200	200	2002	2004	829258	**100600991**
Nexus Euro3	250	2006	2006	829258	**100600991**
Nexus Euro3	250	2006	2006	842093	**100602561 Cinghia**
Nexus Euro3	250	2007	2007	829258	**100600991**
Nexus Euro3	250	2007	2007	842093	**100602561 Cinghia**
Nexus Sp Euro3	250	2006	2007	829258	**100600991**
Nexus Sp Euro3	250	2006	2007	842093	**100602561 Cinghia**
Nexus Euro3	300	2008	2008	829258	**100600991**
Nexus Euro3	300	2008	2008	842093	**100602561 Cinghia**
Nexus Euro3	300	2009	2011	829258	**100600991**
Nexus Euro3	300	2009	2011	842093	**100602561 Cinghia**
Fuoco 4T-4V Ie E3 Lt	500	2013	2014	829258	**100600991**
Fuoco Euro3	500	2007	2013	829258	**100600991**
Nexus	500	2003	2005	487845	**100601141**
Nexus Euro3	500	2006	2011	487845	**100601141**
Nexus Sp Euro3	500	2006	2007	487845	**100601141**
HERCULES					
Limbo 25 Ma	25	1995	1995	-	**100600371**
Reggae 50	50	1995	1995	-	**100600371**
Splinter 50	50	1995	1995	-	**100600371**
HONDA					
Nsc 50 Mpd Vision 16/14 Zoll Rad	50	2012	2016	17210-KZL-930	**100602841**
Nsc 50 R 2Wh Repsol 14 Zoll Rad	50	2013	2014	17210-KZL-930	**100602841**
Nsc 50 R T2 14 Zoll Rad	50	2014	2016	17210-KZL-930	**100602841**
Nsc 50 R T2 Repsol 14 Zoll Rad	50	2015	2016	17210-KZL-930	**100602841**
Nsc 50 R T2 Tricolor 14 Zoll Rad	50	2015	2016	17210-KZL-930	**100602841**
Nsc 50 Wh Vision 14 Zoll Rad	50	2012	2013	17210-KZL-930	**100602841**
Sfx 50	50	1996	2000	17205-GBM-750	**100600231**
Sgx 50 Sky	50	1997	2000	17205-GBM-750	**100600211**
Sh 50 Scoopy	50	1991	1995	17205-GJ4-760	**100600141**
Sh 50 Scoopy	50	1996	2000	17205-GBY-900	**100600201**
Sj 50 Bali	50	1995	2001	17205-GAV-700	**100600171**
Srx 50 Shadow	50	1998	1999	-	**100600221**
Scv 100 Lead	100	2003	2007	17210-KRP-980	**100603130**
Sh 100 Scoopy	100	1996	2001	17205-GBY-900	**100600201**
Sh 100 Scoopy	100	2000	2000	17205-GBY-900	**100600201**
Sj 100 Bali Ex	100	1996	2000	17205-GAV-700	**100600171**
Nhx 110 Wh Lead	110	2008	2013	17210-GFM-970	**100603140**
Nsc 110 Mpd Vision Cbs	110	2012	2016	17210-KZL-930	**100602841**
Anf 125 Innova	125	2005	2005	19412-KTW-900	**100603071**
Fes 125 A S-Wing Abs	125	2007	2013	17210-KRJ-900	**100602651**
Fes 125 Pantheon	125	1998	2002	17205-KEY-900	**100600811**
Fes 125 Pantheon	125	2003	2006	17210-KRJ-900	**100602651**
Fes 125 S-Wing	125	2007	2010	17210-KRJ-900	**100602651**
Nes 125 @/ Arobase	125	2000	2006	17210-KGF-900	**100601132**
Nss 125 Ad Forza Abs	125	2015	2017	17210-K40-F00	**100603120**
Pcx 125 Ww125	125	2013	2013	17210-KZR-600	**100602771**
Pcx 125 Ww125Ex2	125	2010	2011	17210-KWN-900	**100602661**
Pcx 125 Ww125Ex2	125	2012	2016	17210-KZR-600	**100602771**

Modello *Model*	CC	Da *From*	A *To*	OEM	Codice RMS *RMS Code*
Pes 125 Ps I	125	2006	2013	17210-KGF-900	**100601132**
Ses 125 Dylan	125	2002	2006	17210-KGF-900	**100601132**
Sh 125 A I Abs	125	2013	2016	17210-K01-900	**100602851**
Sh 125 Ad I Abs	125	2017	2018	17210-K77-V00	**100603740**
Sh 125 Anc I Mode	125	2014	2016	17210-KZR-600	**100602771**
Sh 125 D I	125	2009	2009	17210-KGF-900	**100601132**
Sh 125 I	125	2005	2012	17210-KGF-900	**100601132**
Sh 125 I	125	2016	2016	17210-K01-900	**100602851**
Xl 125 V Varadero	125	2001	2006	17211-KPC-D20	**100603150**
Xl 125 V Varadero 80 Km/H	125	2001	2006	17211-KPC-D20	**100603150**
Fes 150 A S-Wing Abs	150	2007	2009	17210-KRJ-900	**100602651**
Fes 150 Pantheon	150	1998	2002	17205-KEY-900	**100600811**
Fes 150 Pantheon	150	2003	2005	17210-KRJ-900	**100602651**
Fes 150 S-Wing	150	2007	2009	17210-KRJ-900	**100602651**
Nes 150 @/ Arobase	150	2000	2006	17210-KGF-900	**100601132**
Pes 150 Ps I	150	2006	2010	17210-KGF-900	**100601132**
Ses 150 Dylan	150	2002	2004	17210-KGF-900	**100601132**
Sh 150	150	2001	2004	17210-KGF-900	**100601132**
Sh 150 A I Abs	150	2013	2016	17210-K01-900	**100602851**
Sh 150 Ad I Abs	150	2017	2018	17210-K77-V00	**100603740**
Sh 150 D I	150	2009	2011	17210-KGF-900	**100601132**
Sh 150 I	150	2005	2008	17210-KGF-900	**100601132**
Cbr 250 R	250	2011	2014	17221-KYJ-640	**100603110**
Cbr 250 Ra Abs	250	2011	2015	17221-KYJ-640	**100603110**
Cn 250 Helix	250	1986	1990	17214-KS4-000	**100603751**
Cn 250 Helix Spazio	250	1991	1999	17214-KS4-000	**100603751**
Fes 250 Foresight	250	1998	2005	17210-KFG-010	**100600781**
Nss 250 A Forza Abs	250	2008	2011	17210-KVZ-630	**100602911**
Nss 250 A Jazz Abs	250	2001	2004	17210-KFG-010	**100600781**
Nss 250 Ex Forza Abs	250	2005	2013	17210-KSV-J02	**100602641**
Nss 250 Ex Forza Abs	250	2008	2013	17210-KVZ-630	**100602911**
Nss 250 Jazz	250	2001	2001	17210-KFG-010	**100600781**
Nss 250 Jazz	250	2003	2004	17210-KFG-010	**100600781**
Nss 250 Jazz Es	250	2001	2004	17210-KFG-010	**100600781**
Nss 250 X Forza	250	2007	2013	17210-KSV-J02	**100602641**
Nss 250 X Forza	250	2008	2013	17210-KVZ-630	**100602911**
Cbr 300 Ra Abs	300	2014	2016	17221-KYJ-640	**100603110**
Nss 300 A Forza Abs	300	2013	2015	17210-K04-930	**100603021**
Nss 300 A Forza Abs	300	2013	2015	19412-KTW-900	**100603071**
Nss 300 A Forza Abs	300	2016	2016	17210-K04-930	**100603021**
Nss 300 A Forza Deluxe Abs	300	2016	2016	17210-K04-930	**100603021**
Nss 300 Forza	300	2013	2015	17210-K04-930	**100603021**
Nss 300 Forza	300	2013	2015	19412-KTW-900	**100603071**
Nss 300 Forza	300	2016	2016	17210-K04-930	**100603021**
Sh 300 A I Abs	300	2007	2007	17210-KTW-900	**100602381**
Sh 300 A I Abs	300	2007	2010	19412-KTW-900	**100603071**
Sh 300 A I Abs	300	2008	2011	17210-KTW-900	**100602381**
Sh 300 A I Abs	300	2011	2015	19412-KTW-900	**100603071**
Sh 300 A I Abs	300	2012	2015	17210-KTW-900	**100602381**
Sh 300 A I Abs	300	2016	2016	19412-KTW-900	**100603071**
Sh 300 I	300	2008	2009	17210-KTW-900	**100602381**
Sh 300 I	300	2008	2010	19412-KTW-900	**100603071**
Sh 300 I	300	2010	2010	17210-KTW-900	**100602381**
Fjs 400 A Sw-T Abs	400	2009	2016	17230-MCT-000	**100602631**
Fjs 400 D Sw-T	400	2009	2013	17230-MCT-000	**100602631**
Fjs 600 A Silver Wing Abs	600	2003	2010	17230-MCT-000	**100602631**
Fjs 600 A Sw-T Abs	600	2011	2016	17230-MCT-000	**100602631**
Fjs 600 D Silver Wing	600	2003	2006	17230-MCT-000	**100602631**
Fjs 600 Silver Wing	600	2001	2002	17230-MCT-000	**100602631**
Ctx 700 D Dct Halbverkleidung Abs	700	2014	2016	17210-MGS-D30	**100602901**
Ctx 700 Nd Dct Lenkerverkleidung Abs	700	2014	2016	17210-MGS-D30	**100602901**
Nc 700 D Integra Dct Abs	700	2012	2013	17210-MGS-D30	**100602901**
Nc 700 S	700	2012	2014	17210-MGS-D30	**100602901**
Nc 700 Sa Abs	700	2012	2014	17210-MGS-D30	**100602901**
Nc 700 Sd Dct Abs	700	2012	2014	17210-MGS-D30	**100602901**
Nc 700 X	700	2012	2014	17210-MGS-D30	**100602901**
Nc 700 Xa Abs	700	2012	2014	17210-MGS-D30	**100602901**
Nc 700 Xd Dct Abs	700	2012	2014	17210-MGS-D30	**100602901**
Nc 700 Xd Dct Abs	700	2013	2014	17210-MGS-D30	**100602901**
Nc 750 D Integra Dct Abs	750	2014	2016	17210-MGS-D30	**100602901**
Nc 750 J Nm4 Vultus Dct Abs	750	2014	2017	17210-MGS-D30	**100602901**
Nc 750 Sa Abs	750	2014	2016	17210-MGS-D30	**100602901**
Nc 750 Sd Dct Abs	750	2014	2016	17210-MGS-D30	**100602901**
Nc 750 Xa Abs	750	2014	2016	17210-MGS-D30	**100602901**
Nc 750 Xd Dct Abs	750	2014	2016	17210-MGS-D30	**100602901**
X-Adv 750 Dct Abs	750	2017	2018	17210-MKH-D00	**100603690**
Cb 1000 R	1000	2008	2016	17210-MFN-D02	**100603100**
Cb 1000 Ra Abs	1000	2008	2016	17210-MFN-D02	**100603100**
Cbf 1000 F	1000	2010	2014	17210-MFN-D02	**100603100**
Cbf 1000 Fa Abs	1000	2010	2016	17210-MFN-D02	**100603100**
Gl 1800 A Goldwing Abs	1800	2001	2005	17210-MCA-A60	**100603580**
Gl 1800 B Goldwing/F6B/ Bagger Abs	1800	2013	2016	17210-MCA-A60	**100603580**
Gl 1800 C Goldwing/F6C/ Valkyrie Abs	1800	2014	2016	17210-MCA-A60	**100603580**
Gl 1800 Goldwing Abs	1800	2006	2013	17210-MCA-A60	**100603580**
Gl 1800 Goldwing Airbag/ Navi Abs	1800	2007	2016	17210-MCA-A60	**100603580**
ITALJET					
Formula 50 Ac Dd	50	1995	1997	-	**100600241**
Formula 50 Ac Dd Race	50	1996	1996	-	**100600241**
Formula 50 Ac Dd Sport	50	1998	1998	-	**100600241**
Formula 50 Ac Dt	50	1997	2003	-	**100600241**
Formula 50 Lc Dd	50	1997	2003	-	**100600241**
Dragster 125	125	1999	2003	-	**100600121**
Formula 125	125	1997	2001	-	**100600241**
Millennium 125	125	2000	2003	-	**100600791**
Torpedo 125	125	1999	2000	240436478	**100600421**
Dragster 180	180	1999	2003	-	**100600121**
KAWASAKI					
Ninja Zx-6R P7F-P8F	600	2007	2008	110130016	**100603220**
Ninja Zx-6R R9F-Raf-Rbf-Rcf-Rdf	600	2009	2013	110130036	**100603230**
Ninja Zx-6R Ref-Rff-Rgf	600	2014	2016	110130036	**100603230**
Ninja Zx-6R Abs Fdf-Fef-Fff-Fffa	636	2013	2015	110130036	**100603230**
Ninja Zx-6R Abs Fgf-Fgfa	636	2016	2016	110130036	**100603230**
Ninja Zx-6R Edf-Eef-Eff-Effa	636	2013	2015	110130036	**100603230**
Ninja Zx-6R Egf-Egfa	636	2016	2016	110130036	**100603230**
Er-6F Abs D9F-Daf-Dbf	650	2009	2011	110290011	**100603160**
Er-6F Abs Fcf-Fds-Fef-Fff-Fgf	650	2012	2016	110130713	**100603170**
Er-6F C9F-Caf-Cbf	650	2009	2011	110290011	**100603160**
Er-6F Ecf-Eds-Eef-Eff-Egf	650	2012	2016	110130713	**100603170**
Er-6N Abs D9F-Daf-Dbf	650	2009	2011	110290011	**100603160**
Er-6N Abs Fcf-Fds-Fef-Fff-Fgf	650	2012	2016	110130713	**100603170**
Er-6N C9F-Caf-Cbf	650	2009	2011	110290011	**100603160**
Er-6N Ecf-Eds-Eef-Eff-Egf	650	2012	2016	110130713	**100603170**



NYPSO

Modello *Model*	CC	Da *From*	A *To*	OEM	Codice RMS *RMS Code*
Z750 Abs M7F-Maf-Mas	750	2007	2010	110131302	**100603190**
Z750 Abs Mbf-Mcf	750	2011	2012	110131302	**100603190**
Z750 J1H-J2H	750	2004	2005	110131302	**100603190**
Z750 J6F	750	2006	2006	110131302	**100603190**
Z750 L7F-Laf-Las	750	2007	2010	110131302	**100603190**
Z750 Lbf-Lcf	750	2011	2012	110131302	**100603190**
Z750R Abs Pbf-Pcf	750	2011	2012	110131302	**100603190**
Z750R Nbf-Ncf	750	2011	2012	110131302	**100603190**
Z750S K1H	750	2005	2005	110131302	**100603190**
Z750S K6F	750	2006	2006	110131302	**100603190**
Ninja Zx-10R Abs Kbf-Kcf-Kdf-Kef	1000	2011	2014	110130041	**100603210**
Ninja Zx-10R Abs Kff-Kffa	1000	2015	2015	110130041	**100603210**
Ninja Zx-10R E8F-E9F	1000	2008	2009	110130026	**100603200**
Ninja Zx-10R Faf	1000	2010	2010	110130026	**100603200**
Ninja Zx-10R Jbf-Jcf-Jdf-Jef	1000	2011	2014	110130041	**100603210**
Ninja Zx-10R Jff-Jffa	1000	2015	2015	110130041	**100603210**
Z1000 A1H-A3H	1000	2003	2005	110131302	**100603190**
Z1000 A6F	1000	2006	2006	110131302	**100603190**
Z1000 Abs C7F-C9F	1000	2007	2009	110131302	**100603190**
Z1000 Abs Eaf-Ebf-Ecf-Ecfa	1000	2010	2012	110130040	**100603180**
Z1000 B7F-B9F	1000	2007	2009	110131302	**100603190**
Z1000 Daf-Das-Dbf-Dcf-Dcfa	1000	2010	2012	110130040	**100603180**
KYMCO					
Agility 2T R16	50	2010	2010	00162309	**100601331**
Agility 2T R16	50	2012	2012	00162309	**100601331**
Agility 4T Carry	50	2011	2011	00164044	**100602391**
Agility 4T R10	50	2006	2008	00163126	**100602401**
Agility 4T R12	50	2007	2008	00164044	**100602391**
Agility 4T R16	50	2008	2009	00101074	**100602451**
Agility 4T R16	50	2012	2012	00101074	**100602451**
Agility Plus 2T	50	2014	2014	00162309	**100601331**
Agility R12	50	2005	2005	00164044	**100602391**
Agility Rs	50	2009	2009	00164044	**100602391**
B&W	50	2002	2002	00163571	**100601321**
B&W Euro2	50	2003	2003	00163571	**100601321**
Cx	50	1993	1993	00163013	**100600271**
Cx Super	50	1994	1997	00163013	**100600271**
Dink 50 4T	50	2007	2007	00101074	**100602451**
Dink Classic Euro2	50	2003	2003	00163571	**100601321**
Dink Lc	50	1998	2002	00163571	**100601321**
Dj W	50	1994	2000	00163013	**100600271**
Dj X	50	1991	1992	00163013	**100600271**
Dj Y	50	1993	1993	00163013	**100600271**
Fever Zx	50	1999	2000	00163892	**100600281**
Fever Zx Euro2	50	2003	2004	00163892	**100600281**
Heroism	50	1995	1997	00166204	**100600261**
Heroism	50	1995	1997	00166204	**100600521**
K 12	50	1995	2000	00163892	**100600281**
Kb	50	1995	2000	00163892	**100600281**
Like 4T	50	2009	2009	00117213	**100602701**
People	50	1999	2000	00162309	**100601331**
People	50	2004	2004	00162309	**100601331**
People Euro2	50	2003	2003	00162309	**100601331**
People Euro2	50	2008	2008	00162309	**100601331**
People Euro2	50	2011	2011	00162309	**100601331**
People S	50	2005	2008	00162309	**100601331**
People S 4T	50	2006	2008	00101074	**100602451**
Sento	50	2008	2008	00101074	**100602451**

Modello *Model*	CC	Da *From*	A *To*	OEM	Codice RMS *RMS Code*
Sniper	50	1993	1993	00166204	**100600261**
Sniper	50	1993	1993	00166204	**100600521**
Sniper Dd	50	1994	1996	00166204	**100600261**
Sniper Dd	50	1994	1996	00166204	**100600521**
Super 8	50	2007	2007	00101074	**100602451**
Super 8 2T	50	2009	2009	00162309	**100601331**
Super 8 2T	50	2013	2013	00162309	**100601331**
Super 8 4T	50	2009	2009	00101074	**100602451**
Super 8 4T	50	2013	2013	00101074	**100602451**
Super 9	50	2000	2000	00163571	**100601321**
Super 9 Sport Euro2	50	2003	2004	00163571	**100601321**
Top Boy	50	1997	2000	00163571	**100601321**
Vitality 2T	50	2004	2004	00163571	**100601321**
Vitality 4T	50	2004	2004	00164044	**100602391**
Yup	50	2002	2002	00163571	**100601321**
Yup Euro2	50	2003	2003	00163571	**100601321**
Agility Plus	125	2014	2014	00162377	**100602311**
Agility Plus E4	125	2016	2016	00162377	**100602311**
Agility R16	125	2008	2009	00162377	**100602311**
Agility R16	125	2012	2012	00162377	**100602311**
B&W 125-150	125	2000	2000	00162989	**100603240**
B&W 125-150 Euro2	125	2003	2004	00162989	**100603240**
Dink 125 Euro3	125	2006	2007	00162475	**100600741**
Dink 125-150	125	1997	1998	00162953	**100600752**
Dink Classic 125-150	125	2002	2002	00162993	**100600731**
Dink Classic 125-150 Euro2	125	2003	2003	00162993	**100600731**
Dink Lx 125-150	125	1998	2000	00162993	**100600731**
Downtown 125I	125	2009	2016	00117199	**100602581**
Downtown E4	125	2016	2016	00117245	**100602591**
G-Dink	125	2012	2012	00117409	**100602761**
Grand Dink 125 Euro2	125	2003	2004	00162475	**100600741**
Grand Dink 125-150	125	2001	2002	00162475	**100600741**
K-Xct I	125	2012	2014	00117469	**100602831**
Like	125	2009	2009	00117221	**100602801**
Like Lx	125	2012	2012	00117221	**100602801**
Movie 125 Euro3	125	2006	2007	00163996	**100609341**
Movie Xl 125-150	125	2001	2001	00163996	**100609341**
Movie Xl 125-150 Euro2	125	2003	2004	00163996	**100609341**
People 125-150	125	1999	2000	00162377	**100602311**
People 125-150 Euro2	125	2003	2003	00162377	**100602311**
People Euro3	125	2007	2008	00162377	**100602311**
People Euro3	125	2011	2011	00162377	**100602311**
People Gti	125	2010	2010	00117303	**100602671**
People Gti	125	2014	2014	00117303	**100602671**
People One E4	125	2016	2016	00162377	**100602311**
People One I	125	2013	2013	00162377	**100602311**
People One I Dd	125	2015	2015	00162377	**100602311**
People S	125	2005	2005	00162377	**100602311**
People S Dd Euro3	125	2007	2008	00162377	**100602311**
People S I Abs	125	2017	2017	00117743	**100603660**
Super 8	125	2008	2009	00162377	**100602311**
X-Town Cbs	125	2016	2016	00117199	**100602581**
Agility R16	150	2008	2009	00162377	**100602311**
B&W 125-150	150	2000	2000	00162989	**100603240**
Dink 125-150	150	1997	1998	00162953	**100600752**
Dink Classic 125-150 Euro2	150	2003	2003	00162993	**100600731**
Grand Dink 125-150	150	2001	2002	00162475	**100600741**
Grand Dink 125-150 Euro2	150	2003	2004	00162475	**100600741**

Modello *Model*	CC	Da *From*	A *To*	OEM	Codice RMS *RMS Code*
Movie 150 Euro3	150	2006	2007	00163996	**100609341**
Movie XI 125-150	150	2001	2001	00163996	**100609341**
Movie XI 125-150 Euro2	150	2003	2004	00163996	**100609341**
People 125-150	150	1999	2000	00162377	**100602311**
People 125-150 Euro2	150	2003	2003	00162377	**100602311**
People S I Abs	150	2017	2017	00117743	**100603660**
Agility 200I R16	200	2010	2010	00162377	**100602311**
Agility I Plus	200	2014	2014	00162377	**100602311**
Agility R16	200	2012	2012	00162377	**100602311**
Dink Classic	200	2004	2004	00162993	**100600731**
Dink Euro3I	200	2006	2007	00162475	**100600741**
Downtown I	200	2010	2010	00117199	**100602581**
Like 200I	200	2009	2009	00117221	**100602801**
Like Lx	200	2012	2012	00117221	**100602801**
People Gti	200	2010	2010	00117303	**100602671**
People Gti	200	2014	2014	00117303	**100602671**
People S	200	2005	2005	00162377	**100602311**
People S 200I	200	2007	2007	00162377	**100602311**
Grand Dink	250	2001	2002	00162475	**100600741**
Grand Dink Euro2	250	2003	2004	00162475	**100600741**
People Lc	250	2003	2004	00162380	**100602431**
People S	250	2006	2006	00162380	**100602431**
People S 250I	250	2007	2007	00162380	**100602431**
X Citing	250	2005	2005	00162475	**100600741**
X Citing I	250	2006	2007	00162475	**100600741**
Downtown 300I	300	2009	2009	00117245	**100602591**
Downtown Abs	300	2010	2010	00117245	**100602591**
Downtown Abs I	300	2011	2016	00117245	**100602591**
Downtown I	300	2011	2011	00117245	**100602591**
G-Dink	300	2012	2012	00117409	**100602761**
K-Xct I	300	2012	2012	00117469	**100602831**
K-Xct I Abs	300	2014	2014	00117469	**100602831**
People Gti	300	2010	2011	00117303	**100602671**
People Gti	300	2014	2014	00117303	**100602671**
People Gti Abs	300	2012	2012	00117303	**100602671**
People Gti Abs	300	2014	2014	00117303	**100602671**
People Gti Abs E4	300	2016	2016	00117303	**100602671**
People S 300I	300	2008	2008	00162380	**100602431**
X Citing 300I	300	2008	2008	00162475	**100600741**
X Citing 300I R	300	2008	2009	00162475	**100600741**
Downtown Abs E4	350	2016	2016	00117245	**100602591**
Downtown I Abs	350	2015	2015	00117245	**100602591**
X Citing I	400	2013	2013	00117492	**100602981**
X Citing I	400	2015	2015	00117492	**100602981**
X Citing I Abs	400	2014	2015	00117492	**100602981**
X Citing I Abs E4	400	2016	2017	00117621	**100603670**
X Citing I S Euro4	400	2018	2018	00117621	**100603670**
X Citing	500	2005	2005	00163096	**100602921**
X Citing 500 R	500	2009	2009	00163096	**100602921**
X Citing 500I	500	2006	2008	00163096	**100602921**
X Citing 500I R	500	2007	2008	00163096	**100602921**
Ak 550	550	2017	2017	00117682	**100603650**
LIGIER					
Microcar - Varie Applicazioni	-	-	-	-	**100602320**
LML					
Star 125 4T Automatica	125	2013	2016	-	**100602961**
Star 125 4T Automatica	125	2013	2016	-	**100602181 Variatore**
Star Lite 125 4T Automatica	125	2016	2016	-	**100602961**
Star Lite 125 4T Automatica	125	2016	2016	-	**100602181 Variatore**
Star 150 4T	150	2012	2012	-	**100602961**
Star 150 4T	150	2012	2012	-	**100602181 Variatore**
Star 151 4T	150	2012	2012	-	**100602181 Variatore**
Star 151 4T	151	2012	2012	-	**100602961**
MALAGUTI					
Centro Base	50	1993	1994	06604500	**100600061**
Centro SI	50	1994	1998	06604500	**100600061**
Centro SI Kat	50	1999	2000	06604500	**100600061**
Ciak	50	1999	2000	06609100	**100600831**
Ciak Master Euro 2	50	2006	2006	06609100	**100600831**
Ciak Mono Euro 2	50	2003	2003	06609100	**100600831**
Ciak Mono Euro 2 2.3	50	2003	2003	06609100	**100600831**
Ciak Td	50	2000	2001	06609100	**100600831**
Crosser Cr1	50	1995	1998	06605500	**100600291**
F10 Ac	50	2008	2008	06604500	**100600061**
F10 Ac Eco	50	2009	2010	06604500	**100600061**
F10 Jet Line	50	1992	1998	06604500	**100600061**
F10 Kat	50	1999	2000	06604500	**100600061**
F10 Restyling Eu1	50	2001	2002	06604500	**100600061**
F10 Restyling Eu2-2.3	50	2003	2004	06604500	**100600061**
F10 Restyling Euro2	50	2002	2003	06604500	**100600061**
F10 Restyling Euro2	50	2006	2006	06604500	**100600061**
F12 Aria Restyling Euro 2	50	2006	2006	06604500	**100600061**
F12 Lc Restyling Euro 2	50	2006	2006	06604500	**100600061**
F12 Phantom	50	1994	1998	06604500	**100600061**
F12 Phantom Euro1	50	1999	2000	06604500	**100600061**
F12 Phantom Lc	50	1994	1998	06604500	**100600061**
F12 Phantom Lc Euro1	50	1999	2000	06604500	**100600061**
F12 Phantom Lc Restyling Eu1	50	2001	2002	06604500	**100600061**
F12 Phantom Lc Restyling Eu2	50	2002	2002	06604500	**100600061**
F12 Phantom Lc Restyling Eu2-2.3	50	2003	2004	06604500	**100600061**
F12 Phantom Lc Twin Disks	50	1998	1998	06604500	**100600061**
F12 Phantom Restyling Eu1	50	2001	2002	06604500	**100600061**
F12 Phantom Restyling Eu2	50	2002	2002	06604500	**100600061**
F12 Phantom Restyling Eu2-2.3	50	2003	2004	06604500	**100600061**
F12R Phantom Ac	50	2007	2010	06604500	**100600061**
F12R Phantom Lc	50	2007	2010	06604500	**100600061**
F15 Fire Fox	50	1996	1998	06606600	**100600301**
F15 Fire Fox Air Cooled	50	2005	2006	06604500	**100600061**
F15 Fire Fox Euro2	50	2002	2003	06604500	**100600061**
F15 Fire Fox Restyling Euro2-2.3	50	2003	2004	06604500	**100600061**
F15 Fire Fox Twin Disks & Special	50	1998	1999	06606600	**100600301**
F15 Fire Fox Twin Disks Digit Kat	50	1998	2000	06606600	**100600301**
F15 Lc Restyling Euro 2	50	2004	2005	06604500	**100600061**
F15 Lc-Tds Restyling Euro 1	50	2001	2001	06606600	**100600301**
Yesterday - Yesterday Euro	50	1997	2000	06604500	**100600061**
Ciak	100	1999	2000	06608800	**100600821**
F12 Phantom	100	1999	2000	06608800	**100600821**
Blog	125	2009	2010	65046700	**100602501**
Blog	125	2009	2010	65041100	**100602511 Variatore**



NYPSO

Modello *Model*	CC	Da *From*	A *To*	OEM	Codice RMS *RMS Code*
Blog	125	2011	2011	65046700	**100602501**
Blog	125	2011	2011	65041100	**100602511 Variatore**
Centro Ie	125	2008	2009	65046700	**100602501**
Centro Ie	125	2008	2009	65041100	**100602511 Variatore**
Centro SI	125	2009	2010	65046700	**100602501**
Centro SI	125	2009	2010	65041100	**100602511 Variatore**
Centro SI	125	2011	2011	65046700	**100602501**
Centro SI	125	2011	2011	65041100	**100602511 Variatore**
Ciak	125	2000	2001	06611003	**100602311**
Ciak Master	125	2004	2004	06609100	**100600831**
Ciak Master	125	2004	2004	06611003	**100602311**
Ciak Master Euro 3	125	2006	2006	06611003	**100602311**
Ciak Restyling Euro2	125	2003	2003	06611003	**100602311**
F18 Warrior	125	2000	2002	06610300	**100601201**
Madison	125	1999	2001	06612400	**100600791**
Madison 3	125	2006	2009	06614100	**100600991**
Madison R Restyling	125	2002	2002	06612400	**100600791**
Madison R Restyling Euro2	125	2003	2004	06612400	**100600791**
Phantom Max	125	2003	2003	06612400	**100600791**
Ciak	150	2000	2002	06611003	**100602311**
Ciak Master	150	2004	2004	06611003	**100602311**
Ciak Restyling Euro2	150	2003	2003	06611003	**100602311**
F18 Warrior	150	2000	2002	06610300	**100601201**
Madison T	150	1999	2001	06612400	**100600791**
Blog	160	2009	2010	65046700	**100602501**
Blog	160	2009	2010	65041100	**100602511 Variatore**
Blog	160	2011	2011	65046700	**100602501**
Blog	160	2011	2011	65041100	**100602511 Variatore**
Centro Ie	160	2008	2009	65046700	**100602501**
Centro Ie	160	2008	2009	65041100	**100602511 Variatore**
Centro SI	160	2009	2010	65046700	**100602501**
Centro SI	160	2009	2010	65041100	**100602511 Variatore**
Centro SI	160	2011	2011	65046700	**100602501**
Centro SI	160	2011	2011	65041100	**100602511 Variatore**
Ciak Master Euro 2	200	2006	2006	06611003	**100602311**
Madison S Restyling	200	2002	2002	06614100	**100600991**
Madison S Restyling Euro2	200	2003	2003	06614100	**100600991**
Phantom Max	200	2003	2003	06614100	**100600991**
Madison 3	250	2006	2009	06614100	**100600991**
Madison Rs Restyling	250	2004	2004	06614100	**100600991**
Madison S	250	1999	2001	06608100	**100600331**
Madison S	250	1999	2001	06607900	**100602001 Variatore**
Password	250	2005	2006	06626100	**100601211**
Password Eu3	250	2007	2008	06626100	**100601211**
Phantom Max	250	2004	2004	06614100	**100600991**
Madison K	400	2002	2002	06611700	**100602021**
Madison K Restyling	400	2002	2004	06611700	**100602021**
Spidermax Gt	500	2004	2005	06615400	**100601141**
Spidermax Gt Euro3	500	2006	2006	06615400	**100601141**
Spidermax Rs	500	2008	2008	06615400	**100601141**

Modello *Model*	CC	Da *From*	A *To*	OEM	Codice RMS *RMS Code*
MBK					
Cw Booster	50	1990	1991	3VLE44510100	**100600311**
Cw Booster	50	2001	2002	3VLE44510100	**100600311**
Cw Booster	50	2004	2004	3VLE44510100	**100600311**
Cw Booster (Ita)	50	1992	1994	3VLE44510100	**100600311**
Cw Booster Naked	50	2003	2003	3VLE44510100	**100600311**
Cw Booster Spirit	50	1996	1998	3VLE44510100	**100600311**
Cw Booster Spirit (Ita)	50	1999	2000	3VLE44510100	**100600311**
Cw Booster Spirit Euro2	50	2002	2003	3VLE44510100	**100600311**
Cw L Booster	50	2001	2003	3VLE44510100	**100600311**
Cw L Booster Spirit	50	2003	2003	3VLE44510100	**100600311**
Cw R Booster Road (Ita)	50	1994	1995	3VLE44510100	**100600311**
Cw Rs Booster Ng	50	2001	2003	3VLE44510100	**100600311**
Cw Rs Booster Ng (Ita)	50	1995	1999	3VLE44510100	**100600311**
Cw Rs Booster Ng Euro1	50	1999	2000	3VLE44510100	**100600311**
Cw Rsp Booster Rocket (Ita)	50	1997	1998	3VLE44510100	**100600311**
Cw Rsx Booster Track (Ita)	50	1996	1998	3VLE44510100	**100600311**
Cw Sp Booster Spirit Euro2	50	2002	2002	3VLE44510100	**100600311**
Ew Stunt	50	2000	2002	3VLE44510100	**100600311**
Ye Evolis (Ita)	50	1992	1995	3KJ144510000	**100600061**
Yh Flipper	50	1998	1998	5EUE44510000	**100600351**
Yh Flipper	50	2001	2002	5EUE44510000	**100600351**
Yh Flipper Catalitico	50	1999	2000	5EUE44510000	**100600351**
Yh Flipper Euro2	50	2003	2004	5EUE44510000	**100600351**
Ym Fizz (Ita)	50	1994	1995	3KJ144510000	**100600061**
Xc Flame F	125	2000	2000	4CWE54071000	**100602011 Variatore**
Xc K Flame R	125	1996	1999	4CWE44510200	**100600801**
Xc K Flame R	125	1996	1999	4CWE54071000	**100602011 Variatore**
Xc T Flame	125	1995	1999	4CWE44510200	**100600801**
Xc T Flame	125	1995	1999	4CWE54071000	**100602011 Variatore**
Xn Doodo	125	2000	2001	5DS154070100	**100600871 Variatore**
Xq Thunder	125	2001	2002	5DSE44510000	**100600791**
Xq Thunder	125	2001	2002	5DS154070100	**100600871 Variatore**
Yp E Skyliner	125	2003	2003	5DSE44510000	**100600791**
Yp E Skyliner	125	2003	2003	5DS154070100	**100600871 Variatore**
Yp Skyliner	125	1998	2000	5DSE44510100	**100600791**
Yp Skyliner	125	1998	2000	5DS154070100	**100600871 Variatore**
Yp Skyliner	125	2001	2002	5DSE44510000	**100600791**
Yp Skyliner	125	2001	2002	5DS154070100	**100600871 Variatore**
Xn Doodo	150	2001	2002	5DS154070100	**100600871 Variatore**
Xq Thunder	150	2001	2002	5DSE44510000	**100600791**
Xq Thunder	150	2001	2002	5DS154070100	**100600871 Variatore**
Yp Skyliner	150	2000	2000	5DSE44510000	**100600791**
Yp Skyliner	150	2000	2000	5DS154070100	**100600871 Variatore**
Yp Skyliner	150	2001	2002	5DSE44510000	**100600791**
Yp Skyliner	150	2001	2002	5DS154070100	**100600871 Variatore**
Yp E Skyliner	180	2003	2003	5DSE44510000	**100600791**
Yp E Skyliner	180	2003	2003	5DS154070100	**100600871 Variatore**

Modello *Model*	CC	Da *From*	A *To*	OEM	Codice RMS *RMS Code*
Yp Skyliner	250	2000	2001	4HC144510000	**100600331**
Yp Skyliner	250	2000	2001	5GM154070000	**100602421 Variatore**
Yp Skyliner	250	2002	2003	4HC144510000	**100600331**
Yp Skyliner	250	2002	2003	5GM154070000	**100602421 Variatore**
Yp Skyliner Abs	250	2003	2003	4HC144510000	**100600331**
Yp Skyliner Abs	250	2003	2003	5GM154070000	**100602421 Variatore**
Xc Kilibre	300	2003	2003	5SEE44510000	**100600851**
Xc Kilibre	300	2003	2003	5GM154070000	**100602421 Variatore**
MOTO GUZZI					
Nevada 350 Club	350	1998	1999	GU17113651	**100602240**
Nevada 350 Nuovo Tipo Lg12001>	350	1993	1997	GU17113651	**100602240**
Nevada 350 Vecchio Tipo	350	1992	1993	GU17113651	**100602240**
Ntx	350	1986	1990	GU17113651	**100602240**
V35 Carabinieri-Pa <Pd30076	350	1990	1991	GU17113651	**100602240**
V35 Carabinieri-Pa Pd30077>	350	1992	2001	GU17113651	**100602240**
V35 Florida	350	1986	1990	GU17113651	**100602240**
V35 Ii	350	1980	1985	GU17113651	**100602240**
V35 Iii	350	1985	1987	GU17113651	**100602240**
V35C-V50C	350	1982	1986	GU17113651	**100602240**
V35-V50 Accensione Elettronica	350	1977	1979	GU17113651	**100602240**
V50 Iii	500	1980	1984	GU17113651	**100602240**
V50 Iii Polizia-Pa Vecchio Tipo	500	1982	1990	GU17113651	**100602240**
V50 Pa	500	1992	2001	GU17113651	**100602240**
850 T3 E Derivati	850	1979	1985	GU17113651	**100602240**
850 T5 Polizia-Cc-Pa (Nc) <Vr36415	850	1988	1993	GU28113660	**100602280**
850 T5 Polizia-Cc-Pa (Nc) Vr40001>	850	1995	2001	GU28113660	**100602280**
850 T5 Polizia-Cc-Pa. Nc Vr36416-40000	850	1994	1995	GU28113660	**100602280**
Bellagio - Aquila Nera	940	2007	2013	GU30113600	**100602300**
1000 S	1000	1989	1994	GU28113660	**100602280**
1000 Sp	1000	1979	1983	GU17113651	**100602240**
1000 Sp Iii	1000	1989	1994	GU28113660	**100602280**
California Iii Carb.	1000	1987	1993	GU28113660	**100602280**
California Iii Carb. Carenato	1000	1988	1990	GU28113660	**100602280**
California Iii Iniezione	1000	1990	1993	GU28113660	**100602280**
Daytona	1000	1992	1995	GU30113600	**100602300**
Daytona Racing	1000	1996	1996	GU30113600	**100602300**
Daytona Rs	1000	1997	1998	GU30113600	**100602300**
Le Mans	1000	1984	1993	GU28113660	**100602280**
Quota	1000	1992	1997	GU30113600	**100602300**
Strada	1000	1993	1994	GU28113660	**100602280**
V10 Centauro	1000	1997	1999	GU30113600	**100602300**
California	1100	1994	1997	GU30113600	**100602300**
California Aluminium - Titanium	1100	2003	2004	GU30113600	**100602300**
California Aquila Nera	1100	2009	2011	GU30113600	**100602300**
California Classic - Touring	1100	2006	2008	GU30113600	**100602300**
California Ev	1100	2001	2002	GU30113600	**100602300**
California Ev - Ev Touring	1100	2003	2005	GU30113600	**100602300**
California Ev (V11 Ev Usa)	1100	1997	2000	GU30113600	**100602300**
California Ev P.I.	1100	2002	2002	GU30113600	**100602300**
California Jackal	1100	1999	2001	GU30113600	**100602300**
California Special	1100	1999	2000	GU30113600	**100602300**

Modello *Model*	CC	Da *From*	A *To*	OEM	Codice RMS *RMS Code*
California Special Sport - Aluminium	1100	2002	2003	GU30113600	**100602300**
California Sport	1100	2001	2002	GU30113600	**100602300**
California Stone	1100	2001	2001	GU30113600	**100602300**
California Stone	1100	2004	2005	GU30113600	**100602300**
California Stone - Metal	1100	2002	2003	GU30113600	**100602300**
California Vintage	1100	2006	2012	GU30113600	**100602300**
Quota 1100 Es	1100	1999	2001	GU30113600	**100602300**
Sport 1100 Carburatori	1100	1994	1996	GU30113600	**100602300**
Sport 1100 Iniezione	1100	1996	1999	GU30113600	**100602300**
Sport Corsa	1100	1998	1999	GU30113600	**100602300**
V11 Le Mans	1100	2001	2002	GU30113600	**100602300**
V11 Sport	1100	1999	2001	GU30113600	**100602300**
PEUGEOT					
Zenith 25 Ma	25	1995	1997	730199	**100600371**
Zenith 25 Na	25	1998	2000	730199	**100600371**
Buxy 50	50	1995	1997	730199	**100600371**
Buxy 50 Rs	50	1996	1997	730199	**100600371**
Elyseo 50 45 Km/H	50	2002	2003	730199	**100600371**
Elyseo 50 50 Km/H	50	1998	2001	730199	**100600371**
Elystar 50	50	2010	2014	730199	**100600371**
Elystar 50 Advantage	50	2006	2009	730199	**100600371**
Elystar 50 Sbc Tsdi	50	2003	2007	730199	**100600371**
Fox 50 L	50	1995	1997	727905	**100600391**
Looxor 50	50	2002	2006	730199	**100600371**
Looxor 50 Tsdi	50	2002	2006	730199	**100600371**
Metropolis Sc	50	1991	1997	705260	**100600131**
Speedake 50	50	1995	1997	730199	**100600371**
Speedfight 1 50 Ac Dt	50	1997	2000	730199	**100600371**
Speedfight 1 50 Lc Dd	50	1999	2000	730199	**100600371**
Speedfight 1 50 Lc Dt	50	1997	1998	730199	**100600371**
Speedfight 2 50 Ac Dd Ultimate Edition	50	2008	2009	730199	**100600371**
Speedfight 2 50 Ac Dt	50	2001	2009	730199	**100600371**
Speedfight 2 50 Ac Dt Iron-X	50	2007	2007	730199	**100600371**
Speedfight 2 50 Ac Dt Motor Sport	50	2007	2007	730199	**100600371**
Speedfight 2 50 Ac Dt Rally Victories	50	2006	2007	730199	**100600371**
Speedfight 2 50 Ac Dt Rcup	50	2007	2009	730199	**100600371**
Speedfight 2 50 Ac Dt Silver Sport	50	2004	2007	730199	**100600371**
Speedfight 2 50 Ac Dt Wrc 307	50	2005	2005	730199	**100600371**
Speedfight 2 50 Lc Dd	50	2001	2009	730199	**100600371**
Speedfight 2 50 Lc Dd Furious	50	2003	2003	730199	**100600371**
Speedfight 2 50 Lc Dd Iron-X	50	2007	2007	730199	**100600371**
Speedfight 2 50 Lc Dd Motor Sport	50	2007	2007	730199	**100600371**
Speedfight 2 50 Lc Dd Rally Victories	50	2006	2007	730199	**100600371**
Speedfight 2 50 Lc Dd Rcup	50	2007	2009	730199	**100600371**
Speedfight 2 50 Lc Dd Silver Sport	50	2004	2007	730199	**100600371**
Speedfight 2 50 Lc Dd Ultimate Edition	50	2008	2009	730199	**100600371**
Speedfight 2 50 Lc Dd Wrc 206	50	2003	2004	730199	**100600371**
Speedfight 2 50 Lc Dd Wrc 307	50	2005	2005	730199	**100600371**
Speedfight 2 50 Lc Dd X-Race	50	2001	2003	730199	**100600371**
Squab 50	50	1996	1997	730199	**100600371**
Sv 50 Tt	50	1993	1997	724064	**100600361**
Sv 50 Tt Junior	50	1993	1996	724064	**100600361**



NYPSO

Modello *Model*	CC	Da *From*	A *To*	OEM	Codice RMS *RMS Code*
Tkr 50	50	2001	2011	730199	**100600371**
Tkr 50 12 Pollici	50	2010	2011	730199	**100600371**
Tkr 50 Furious	50	2003	2011	730199	**100600371**
Tkr 50 Furious 12 Inch	50	2010	2011	730199	**100600371**
Tkr 50 Metal-X	50	2002	2003	730199	**100600371**
Tkr 50 Rally Victories	50	2006	2007	730199	**100600371**
Tkr 50 Rcup	50	2008	2009	730199	**100600371**
Tkr 50 Streetboard	50	2001	2001	730199	**100600371**
Tkr 50 Streetzone	50	2003	2003	730199	**100600371**
Tkr 50 Wrc 307	50	2005	2005	730199	**100600371**
Trekker 50 Off Road	50	1998	2000	730199	**100600371**
Trekker 50 Road	50	1998	2000	730199	**100600371**
Trekker 50 Streetboard	50	1999	2000	730199	**100600371**
V-Clic 50 4T Silver Sport	50	2008	2008	-	**100600521**
Vivacity 50	50	1999	2004	730199	**100600371**
Vivacity 50 2	50	2005	2009	730199	**100600371**
Vivacity 50 2 Blueline	50	2005	2005	730199	**100600371**
Vivacity 50 2 Compact	50	2005	2007	730199	**100600371**
Vivacity 50 2 Motorsport	50	2007	2009	730199	**100600371**
Vivacity 50 2 Rs	50	2008	2008	730199	**100600371**
Vivacity 50 2 Silver Sport	50	2005	2007	730199	**100600371**
Vivacity 50 2 Sportline 4	50	2006	2009	730199	**100600371**
Vivacity 50 2T	50	2009	2013	730199	**100602481**
Vivacity 50 Blueline	50	2004	2004	730199	**100600371**
Vivacity 50 Compact	50	2003	2004	730199	**100600371**
Vivacity 50 Silver Sport	50	2004	2004	730199	**100600371**
Vivacity 50 Sportline	50	2001	2001	730199	**100600371**
Vivacity 50 Sportline 2	50	2002	2002	730199	**100600371**
Vivacity 50 Sportline 3	50	2003	2003	730199	**100600371**
Vivacity2 50	50	2005	2009	730199	**100600371**
Vivacity2 50 Blueline	50	2005	2005	730199	**100600371**
Vivacity2 50 Compact	50	2005	2007	730199	**100600371**
Vivacity2 50 Motorsport	50	2007	2009	730199	**100600371**
Vivacity2 50 Rs	50	2008	2008	730199	**100600371**
Vivacity2 50 Silver Sport	50	2005	2007	730199	**100600371**
Vivacity2 50 Sportline 4	50	2006	2009	730199	**100600371**
Xr7 50	50	2008	2011	-	**100600511**
Zenith 50 Lm	50	1996	1997	730199	**100600371**
Zenith 50 Ln	50	1998	1998	730199	**100600371**
Zenith 50 M	50	1995	1997	730199	**100600371**
Zenith 50 N	50	1998	2000	730199	**100600371**
Elyseo 100	100	1998	2001	737351	**100600701**
Speedfight 1 100	100	1998	2000	737351	**100600701**
Sv 100	100	1998	1998	724064	**100600361**
Trekker 100 Road	100	1998	2000	737351	**100600701**
Vivacity 100	100	1999	2002	737351	**100600701**
Elyseo 125 Dd	125	2001	2003	737534	**100600691**
Elyseo 125 Dt	125	1998	2000	737534	**100600691**
Looxor 125	125	2002	2006	747486	**100600931**
Elyseo 150	150	2001	2003	737534	**100600691**
Looxor 150	150	2002	2006	747486	**100600931**
PIAGGIO					
Ape	50	2009	2016	260569	**100600610**
Ape	50	2009	2016	486942	**100601191 Secondario**
Ape	50	2009	2017	260569	**100600611**
Ape FI - FI2	50	1989	1995	260569	**100600610**
Ape FI - FI2	50	1989	1995	260569	**100600611**
Ape FI3 Europa	50	1996	1999	260569	**100600610**
Ape FI3 Europa	50	1996	1999	260569	**100600611**
Ape Mix 2T	50	1998	2008	295322	**100600610**
Ape Mix 2T	50	1998	2008	295322	**100600611**
Ape P	50	1980	1985	260569	**100600610**
Ape P	50	1980	1985	260569	**100600611**
Ape Rst Mix	50	1999	2003	260569	**100600610**
Ape Rst Mix	50	1999	2003	260569	**100600611**
Ape Tm P	50	1985	1989	260569	**100600610**
Ape Tm P	50	1985	1989	260569	**100600611**
Boss	50	1988	1989	1834235	**100602970**
Boss	50	1988	1989	1834235	**100603063**
Bravo 3	50	1987	1990	1834235	**100602970**
Bravo 3	50	1987	1990	1834235	**100603063**
Bravo Erre 2	50	1975	1981	1834235	**100602970**
Bravo Erre 2	50	1975	1981	1834235	**100603063**
Ciao	50	1980	1988	1834235	**100602970**
Ciao	50	1980	1988	1834235	**100603063**
Ciao Euro1	50	1999	2001	1834235	**100602970**
Ciao Euro1	50	1999	2001	1834235	**100603063**
Ciao Euro2	50	2002	2004	1834235	**100602970**
Ciao Euro2	50	2002	2004	1834235	**100603063**
Ciao Mix Teen	50	1996	2001	1834235	**100602970**
Ciao Mix Teen	50	1996	2001	1834235	**100603063**
Diesis	50	2001	2001	487719	**100600921**
Diesis	50	2001	2001	486942	**100601191 Secondario**
Fly 2T	50	2005	2007	487719	**100600921**
Fly 2T	50	2005	2007	486942	**100601191 Secondario**
Fly 2T	50	2010	2011	487719	**100600921**
Fly 2T	50	2010	2011	486942	**100601191 Secondario**
Fly 4T	50	2005	2007	843194	**100601161**
Fly 4T	50	2005	2007	832972	**100601181 Secondario**
Fly 4T & 25-30 Km/H	50	2008	2011	843194	**100601161**
Fly 4T & 25-30 Km/H	50	2008	2011	832972	**100601181 Secondario**
Fly 4T 2V	50	2013	2015	843194	**100601161**
Fly 4T 2V	50	2013	2015	832972	**100601181 Secondario**
Fly 4T 2V 25-30Km-H	50	2012	2014	843194	**100601161**
Fly 4T 2V 25-30Km-H	50	2012	2014	832972	**100601181 Secondario**
Fly 4T 4V	50	2012	2013	843194	**100601161**
Fly 4T 4V	50	2012	2013	832972	**100601181 Secondario**
Fly 4T Motore Chn	50	2006	2007	843194	**100601161**
Fly 4T Motore Chn	50	2006	2007	832972	**100601181 Secondario**
Free	50	1992	1994	431587	**100600461**
Free Delivery	50	2000	2001	431587	**100600461**
Free FI	50	1995	2002	431587	**100600461**
Grillo	50	1989	1993	1834235	**100602970**
Liberty	50	1997	2005	482738	**100600401**
Liberty	50	1997	2005	486942	**100601191 Secondario**
Liberty 2T	50	2006	2006	487719	**100600921**
Liberty 2T	50	2006	2006	486942	**100601191 Secondario**
Liberty 2T	50	2007	2008	487719	**100600921**

Modello *Model*	CC	Da *From*	A *To*	OEM	Codice RMS *RMS Code*
Liberty 2T	50	2007	2008	486942	**100601191 Secondario**
Liberty 2T Rst	50	2004	2004	487719	**100600921**
Liberty 2T Rst	50	2004	2004	486942	**100601191 Secondario**
Liberty 2T Sport	50	2006	2006	487719	**100600921**
Liberty 2T Sport	50	2006	2006	486942	**100601191 Secondario**
Liberty 2T Sport	50	2007	2008	487719	**100600921**
Liberty 2T Sport	50	2007	2008	486942	**100601191 Secondario**
Liberty 4T	50	2000	2002	487287	**100600911**
Liberty 4T	50	2005	2008	875525	**100600911**
Liberty 4T	50	2005	2008	832972	**100601181 Secondario**
Liberty 4T Delivery - Single	50	2010	2014	875525	**100600911**
Liberty 4T Delivery - Single	50	2010	2014	832972	**100601181 Secondario**
Liberty 4T Delivery Tnt	50	2009	2009	875525	**100600911**
Liberty 4T Delivery Tnt	50	2009	2009	832972	**100601181 Secondario**
Liberty 4T Ptt - Double - Nexive	50	2009	2015	875525	**100600911**
Liberty 4T Ptt - Double - Nexive	50	2009	2015	832972	**100601181 Secondario**
Liberty 4T Ptt (Deu)	50	2007	2012	875525	**100600911**
Liberty 4T Ptt (Deu)	50	2007	2012	832972	**100601181 Secondario**
Liberty 4T Rst	50	2004	2004	487287	**100600911**
Liberty 4T Rst	50	2004	2004	832972	**100601181 Secondario**
Liberty 4T Sport	50	2006	2006	487287	**100600911**
Liberty 4T Sport	50	2006	2008	832972	**100601181 Secondario**
Liberty 4T Sport	50	2007	2008	875525	**100600911**
Liberty Iget 4T 3V 25Km/H	50	2016	2016	1A005015	**100603011**
Liberty Iget 4T 3V Ie	50	2015	2017	1A005015	**100603011**
Liberty Moc 2T & Elle	50	2009	2013	487719	**100600921**
Liberty Moc 2T & Elle	50	2009	2013	486942	**100601191 Secondario**
Liberty Moc 4T & Elle	50	2009	2016	875525	**100600911**
Liberty Moc 4T & Elle	50	2009	2016	832972	**100601181 Secondario**
Liberty Ptt Eu2	50	2004	2005	487719	**100600921**
Liberty Ptt Eu2	50	2004	2005	486942	**100601191 Secondario**
Nrg	50	1994	1996	433437	**100600091**
Nrg Extreme	50	1999	2000	479748	**100600111**
Nrg Mc3	50	2001	2004	479748	**100600111**
Nrg Mc3	50	2001	2004	487719	**100600921**
Nrg Mc3	50	2001	2004	486942	**100601191 Secondario**
Nrg Power Dd	50	2005	2005	487719	**100600921**
Nrg Power Dd	50	2005	2005	486942	**100601191 Secondario**
Nrg Power Dd	50	2006	2006	487719	**100600921**
Nrg Power Dd	50	2006	2006	486942	**100601191 Secondario**
Nrg Power Dd	50	2007	2015	487719	**100600921**
Nrg Power Dd	50	2007	2015	486942	**100601191 Secondario**
Nrg Power Dd Serie Speciale	50	2007	2012	487719	**100600921**
Nrg Power Dd Serie Speciale	50	2007	2012	486942	**100601191 Secondario**
Nrg Power Dt	50	2006	2006	487719	**100600921**

Modello *Model*	CC	Da *From*	A *To*	OEM	Codice RMS *RMS Code*
Nrg Power Dt	50	2006	2006	486942	**100601191 Secondario**
Nrg Power Dt	50	2007	2015	487719	**100600921**
Nrg Power Dt	50	2007	2015	486942	**100601191 Secondario**
Nrg Power Dt Serie Speciale	50	2007	2008	487719	**100600921**
Nrg Power Dt Serie Speciale	50	2007	2008	486942	**100601191 Secondario**
Nrg Power Purejet	50	2004	2011	479748	**100600111**
Nrg Purejet	50	2002	2004	479748	**100600111**
Nrg Purejet	50	2010	2010	479748	**100600111**
Nrg Rst Mc2	50	1996	1998	433437	**100600091**
Nrg Rst Mc2	50	1996	1998	479748	**100600111**
Ntt	50	1995	1996	433437	**100600091**
Quartz	50	1992	1996	431780	**100600481**
Sfera	50	1991	1993	257369	**100600411**
Sfera Maquillage 2	50	1994	1994	257369	**100600411**
Sfera Rst	50	1995	1997	436478	**100600421**
Si	50	1979	1988	1834235	**100602970**
Si Fl2	50	1991	1997	1834235	**100602970**
Si Mix	50	1996	1999	1834235	**100602970**
Superbravo	50	1985	1990	1834235	**100602970**
Superbravo 3	50	1987	1990	1834235	**100602970**
Typhoon	50	2001	2008	487719	**100600921**
Typhoon	50	2005	2008	486942	**100601191 Secondario**
Typhoon	50	2009	2011	487719	**100600921**
Typhoon	50	2009	2011	486942	**100601191 Secondario**
Typhoon 2T Euro2	50	2010	2016	487719	**100600921**
Typhoon 2T Euro2	50	2010	2016	486942	**100601191 Secondario**
Typhoon 2T Euro3 Ch	50	2011	2011	487719	**100600921**
Typhoon 2T Euro3 Ch	50	2011	2011	486942	**100601191 Secondario**
Vespa Et2	50	1997	2005	436478	**100600421**
Vespa Et2	50	1997	2005	486942	**100601191 Secondario**
Vespa Et2 Iniezione	50	1997	2000	436478	**100600421**
Vespa Et4	50	2000	2005	487401	**100600891**
Vespa Et4	50	2000	2005	832972	**100601181 Secondario**
Vespa Lx 2T	50	2005	2008	487719	**100600921**
Vespa Lx 2T	50	2005	2008	486942	**100601191 Secondario**
Vespa Lx 2T	50	2009	2013	487719	**100600921**
Vespa Lx 2T	50	2009	2013	486942	**100601191 Secondario**
Vespa Lx 2T Touring & 30Km	50	2010	2013	487719	**100600921**
Vespa Lx 2T Touring & 30Km	50	2010	2013	486942	**100601191 Secondario**
Vespa Lx 4T	50	2005	2009	843194	**100601161**
Vespa Lx 4T	50	2005	2009	832972	**100601181 Secondario**
Vespa Lx 4T-4V	50	2009	2013	843194	**100601161**
Vespa Lx 4T-4V	50	2009	2013	832972	**100601181 Secondario**
Vespa Lx 4T-4V Touring	50	2010	2013	843194	**100601161**
Vespa Lx 4T-4V Touring	50	2010	2013	832972	**100601181 Secondario**
Vespa Lxv 2T	50	2006	2009	487719	**100600921**
Vespa Lxv 2T	50	2006	2009	486942	**100601191 Secondario**



NYPSO

Modello *Model*	CC	Da *From*	A *To*	OEM	Codice RMS *RMS Code*
Vespa Lxv 2T Navy	50	2008	2008	487719	**100600921**
Vespa Lxv 2T Navy	50	2008	2008	486942	**100601191 Secondario**
Vespa Primavera 2T	50	2013	2016	487719	**100600921**
Vespa Primavera 2T	50	2013	2016	486942	**100601191 Secondario**
Vespa Primavera 4T-4V	50	2013	2016	843194	**100601161**
Vespa Primavera 4T-4V	50	2013	2016	832972	**100601181 Secondario**
Vespa S 2T & College	50	2007	2012	487719	**100600921**
Vespa S 2T & College	50	2007	2012	486942	**100601191 Secondario**
Vespa S 4T-4V & College	50	2008	2012	843194	**100601161**
Vespa S 4T-4V & College	50	2008	2012	832972	**100601181 Secondario**
Vespa Sprint 2T 2V	50	2014	2016	487719	**100600921**
Vespa Sprint 2T 2V	50	2014	2016	486942	**100601191 Secondario**
Vespa Sprint 4T 4V	50	2014	2016	843194	**100601161**
Vespa Sprint 4T 4V	50	2014	2016	832972	**100601181 Secondario**
Zip	50	1992	1993	834741	**100600431**
Zip	50	1995	1996	431838	**100600431**
Zip	50	2000	2004	487719	**100600921**
Zip	50	2000	2004	486942	**100601191 Secondario**
Zip 2T	50	2008	2013	487719	**100600921**
Zip 2T	50	2008	2013	486942	**100601191 Secondario**
Zip 4T	50	2000	2005	834741	**100600431**
Zip 4T	50	2000	2005	832972	**100601181 Secondario**
Zip 4T	50	2006	2013	834741	**100600431**
Zip 4T	50	2006	2013	832972	**100601181 Secondario**
Zip Fast Raider	50	1993	1994	431838	**100600431**
Zip Fast Raider Rst	50	1996	1997	478536	**100600441**
Zip Rst	50	1996	1999	478536	**100600441**
Zip Sp	50	1996	2000	478536	**100600441**
Zip Sp	50	2001	2004	487719	**100600921**
Zip Sp Euro2	50	2006	2013	487719	**100600921**
Zip Sp Euro2	50	2006	2013	486942	**100601191 Secondario**
Skr City	80	1999	1999	478240	**100600081**
Fly 4T	100	2006	2007	843194	**100601161**
Fly 4T	100	2006	2007	832972	**100601181 Secondario**
Fly 4T	100	2008	2008	843194	**100601161**
Fly 4T	100	2008	2008	832972	**100601181 Secondario**
Free	100	2002	2003	431587	**100600461**
Zip 4T	100	2006	2010	834741	**100600431**
Zip 4T	100	2006	2010	832972	**100601181 Secondario**
Beverly	125	2001	2003	829258	**100600991**
Beverly Euro 3	125	2007	2008	829258	**100600991**
Beverly Euro 3	125	2007	2008	842093	**100602561 Cinghia**
Beverly Euro 3 Mic	125	2007	2007	829258	**100600991**
Beverly Euro 3 Mic	125	2007	2007	842093	**100602561 Cinghia**
Beverly Euro 3 Sport	125	2007	2008	829258	**100600991**
Beverly Euro 3 Sport	125	2007	2008	842093	**100602561 Cinghia**

Modello *Model*	CC	Da *From*	A *To*	OEM	Codice RMS *RMS Code*
Beverly Rst	125	2004	2005	829258	**100600991**
Beverly Rst	125	2004	2005	842093	**100602561 Cinghia**
Beverly Rst	125	2005	2007	829258	**100600991**
Beverly Rst	125	2005	2007	842093	**100602561 Cinghia**
Beverly Rst 4T 4V Ie Euro3	125	2010	2015	829258	**100600991**
Beverly Tourer Euro3	125	2007	2010	829258	**100600991**
Beverly Tourer Euro3	125	2007	2010	842093	**100602561 Cinghia**
Carnaby	125	2007	2010	829258	**100600991**
Carnaby	125	2007	2010	842093	**100602561 Cinghia**
Cosa 1 125	125	1988	1991	252971	**100600501**
Cosa 1 125 Elestart	125	1988	1988	252971	**100600501**
Cosa 2	125	1991	1997	252971	**100600501**
Cosa 2	125	1991	1997	2853525	**100602810**
Cosa 2 125	125	1991	1997	252971	**100600501**
Cosa Cl-Clx	125	1988	1991	252971	**100600501**
Cosa Cl-Clx	125	1988	1991	2853525	**100602810**
Fly	125	2005	2007	843194	**100601161**
Fly	125	2005	2007	832703	**100601171 Secondario**
Fly 4T 3V Ie E3 Dt	125	2013	2015	B017901	**100600451**
Fly 4T 3V Ie E3 Dt	125	2013	2015	B017901	**100603031**
Fly 4T 3V Ie Euro3 Lem	125	2012	2013	B017901	**100600451**
Fly 4T 3V Ie Euro3 Lem	125	2012	2013	B017901	**100603031**
Fly Euro3	125	2007	2007	843194	**100601161**
Fly Euro3	125	2007	2007	832703	**100601171 Secondario**
Fly Euro3	125	2008	2011	843194	**100601161**
Fly Euro3	125	2008	2011	832703	**100601171 Secondario**
Hexagon	125	1994	1997	434364	**100600471**
Hexagon Gtx	125	2000	2000	487845	**100601141**
Hexagon Lx4	125	1998	1999	436478	**100600421**
Hexagon Lx-Lxt	125	1998	1999	434364	**100600471**
Liberty	125	1998	2000	436478	**100600421**
Liberty	125	2001	2002	487287	**100600911**
Liberty 4T	125	2006	2007	875525	**100600911**
Liberty 4T	125	2006	2007	832703	**100601171 Secondario**
Liberty 4T	125	2006	2007	842093	**100602561 Cinghia**
Liberty 4T 2V Euro3	125	2009	2012	843194	**100601161**
Liberty 4T 2V Euro3	125	2009	2012	832703	**100601171 Secondario**
Liberty 4T 2V Euro3	125	2009	2012	842093	**100602561 Cinghia**
Liberty 4T 2V Ie Ptt - Ita	125	2012	2013	487287	**100600911**
Liberty 4T 3V Ie E3	125	2013	2014	B017901	**100600451**
Liberty 4T 3V Ie E3	125	2013	2014	B017901	**100603031**
Liberty 4T Euro3	125	2006	2008	487287	**100600911**
Liberty 4T Euro3	125	2006	2008	832703	**100601171 Secondario**
Liberty 4T Euro3 Delivery - Single	125	2007	2015	875525	**100600911**
Liberty 4T Euro3 Delivery - Single	125	2007	2015	832703	**100601171 Secondario**
Liberty 4T Euro3 Delivery - Tnt - Nexive	125	2008	2015	875525	**100600911**
Liberty 4T Euro3 Delivery - Tnt - Nexive	125	2008	2015	832703	**100601171 Secondario**

Modello *Model*	CC	Da *From*	A *To*	OEM	Codice RMS *RMS Code*
Liberty 4T Sport Euro3	125	2006	2008	875525	**100600911**
Liberty 4T Sport Euro3	125	2006	2008	832703	**100601171 Secondario**
Liberty 4T Sport Euro3	125	2006	2008	842093	**100602561 Cinghia**
Liberty Iget 4T 3V Ie	125	2015	2017	1A005015	**100603011**
Liberty Rst	125	2004	2005	487287	**100600911**
Liberty Rst	125	2004	2005	832703	**100601171 Secondario**
Liberty Rst Ptt	125	2005	2011	487287	**100600911**
Liberty Rst Ptt	125	2005	2011	832703	**100601171 Secondario**
Liberty Rst Ptt	125	2005	2011	842093	**100602561 Cinghia**
Liberty Sport	125	2006	2006	875525	**100600911**
Liberty Sport	125	2006	2006	832703	**100601171 Secondario**
Liberty Sport	125	2006	2006	842093	**100602561 Cinghia**
Medley 4T Ie Abs	125	2016	2016	1A005072	**100603250**
Mp3	125	2006	2008	831997	**100602111**
Mp3 Ibrido	125	2009	2010	831997	**100602111**
Mp3 Ie	125	2008	2009	831997	**100602111**
Mp3 Ie Touring	125	2011	2012	831997	**100602111**
Mp3 Yourban Erl	125	2011	2013	829258	**100600991**
Sfera	125	1995	1997	436478	**100600421**
Skipper	125	1994	1997	478240	**100600081**
Skipper 4T	125	2000	2002	487401	**100600891**
Skipper Lx	125	1998	1999	480084	**100600121**
Super Hexagon Gtx 12	125	2001	2002	487845	**100601141**
Typhoon 4T 2V Euro3	125	2010	2011	843194	**100601161**
Typhoon 4T 2V Euro3	125	2010	2011	832703	**100601171 Secondario**
Typhoon 4T 2V Euro3	125	2010	2011	842093	**100602561 Cinghia**
Vespa Et4	125	1996	1998	436478	**100600421**
Vespa Et4	125	1999	2002	487401	**100600891**
Vespa Granturismo	125	2003	2007	831997	**100602111**
Vespa Granturismo	125	2006	2007	842093	**100602561 Cinghia**
Vespa Granturismo Euro 3	125	2006	2007	831997	**100602111**
Vespa Granturismo Euro 3	125	2006	2007	842093	**100602561 Cinghia**
Vespa Gts 4T Ie Super	125	2009	2016	831997	**100602111**
Vespa Gts Euro3	125	2007	2012	831997	**100602111**
Vespa Gts Euro3	125	2007	2012	842093	**100602561 Cinghia**
Vespa Gts Ie Abs E4 (Emea)	125	2016	2018	1A007327	**100603710**
Vespa Gtv	125	2006	2008	831997	**100602111**
Vespa Gtv	125	2006	2008	842093	**100602561 Cinghia**
Vespa Gtv 4T Navy Euro3	125	2008	2008	831997	**100602111**
Vespa Gtv 4T Navy Euro3	125	2008	2008	842093	**100602561 Cinghia**
Vespa Lx	125	2005	2006	843194	**100601161**
Vespa Lx	125	2005	2006	832703	**100601171 Secondario**
Vespa Lx 4T 3V Ie - Touring	125	2012	2013	B016409	**100602820**
Vespa Lx 4T Euro3 Touring	125	2010	2011	843194	**100601161**
Vespa Lx 4T FI	125	2009	2009	843194	**100601161**
Vespa Lx 4T FI	125	2009	2009	832703	**100601171 Secondario**

Modello *Model*	CC	Da *From*	A *To*	OEM	Codice RMS *RMS Code*
Vespa Lx Euro 3	125	2006	2008	843194	**100601161**
Vespa Lx Euro 3	125	2006	2008	832703	**100601171 Secondario**
Vespa Lx Euro 3 Ie	125	2009	2011	843194	**100601161**
Vespa Lx Primavera 4T 3V Ie	125	2013	2016	B018070	**100603041**
Vespa Lxv 4T Euro3	125	2006	2009	843194	**100601161**
Vespa Lxv 4T Euro3	125	2006	2009	832703	**100601171 Secondario**
Vespa Lxv 4T Navy Euro3	125	2007	2008	843194	**100601161**
Vespa Lxv 4T Navy Euro3	125	2007	2008	832703	**100601171 Secondario**
Vespa Lxv Ie 4T	125	2010	2013	843194	**100601161**
Vespa P 125 E	125	1981	1981	113125	**100602753**
Vespa P 125 X	125	1977	1982	113125	**100602753**
Vespa Pk 125	125	1982	1982	113125	**100602753**
Vespa Px	125	1998	2001	2853525	**100602810**
Vespa Px	125	2011	2016	486942	**100601191 Secondario**
Vespa Px 125	125	2011	2016	113125	**100602753**
Vespa Px 125	125	2011	2016	486942	**100601191 Secondario**
Vespa Px 125 30 Anni	125	2007	2008	113125	**100602753**
Vespa Px 125 E Arcobaleno	125	1983	1983	113125	**100602753**
Vespa Px 125 E Elestart	125	1984	1984	113125	**100602753**
Vespa Px 125 E Freno A Disco	125	1998	2001	113125	**100602753**
Vespa Px 125 Euro 2	125	2007	2008	113125	**100602753**
Vespa Px 30 Anni	125	2007	2008	486942	**100601191 Secondario**
Vespa Px Euro 2	125	2001	2007	285352	**100602810**
Vespa Pxe Arcobaleno	125	1981	1997	113125	**100602753**
Vespa Pxe Arcobaleno	125	1981	1997	2853525	**100602810**
Vespa S 4T 3V Ie	125	2012	2012	B016409	**100602820**
Vespa S 4T Euro 3	125	2007	2008	843194	**100601161**
Vespa S 4T Euro 3	125	2007	2008	832703	**100601171 Secondario**
Vespa S 4T Ie & College	125	2009	2011	843194	**100601161**
Vespa Sprint 4T 3V Ie	125	2014	2015	B018070	**100603041**
Vespa Sprint Iget 4T 3V Abs	125	2016	2016	B018070	**100603041**
Vespa Super 125	125	1966	1968	90926	**100603063**
X Evo	125	2007	2016	831997	**100602111**
X10 4T 4V Ie Euro3	125	2012	2013	829258	**100600991**
X7 Euro 3	125	2008	2008	829258	**100600991**
X7 Euro 3	125	2008	2008	842093	**100602561 Cinghia**
X7 Evo Ie Euro 3	125	2009	2010	829258	**100600991**
X8	125	2004	2006	831997	**100602111**
X8 Premium Euro 2	125	2006	2006	831997	**100602111**
X8 Premium Euro 3	125	2006	2007	831997	**100602111**
X8 Street Euro 2	125	2006	2007	843194	**100601161**
X8 Street Euro 2	125	2006	2007	832703	**100601171 Secondario**
X8 Street Euro 2	125	2006	2007	842093	**100602561 Cinghia**
X9	125	2001	2002	827936	**100600881**
X9 Evolution	125	2003	2003	829258	**100600991**
X9 Evolution	125	2005	2006	831997	**100602111**
X9 Evolution Euro3	125	2007	2007	831997	**100602111**
Zip	125	2000	2002	-	**100600901**
Zip	125	2000	2002	827694	**100600981**
Cosa 1 150	150	1988	1991	252971	**100600501**
Cosa 2 150	150	1991	1997	252971	**100600501**



NYPSO

Modello *Model*	CC	Da *From*	A *To*	OEM	Codice RMS *RMS Code*
Fly	150	2005	2007	843194	**100601161**
Fly	150	2005	2007	832703	**100601171 Secondario**
Fly Euro3	150	2008	2011	843194	**100601161**
Fly Euro3	150	2008	2011	832703	**100601171 Secondario**
Liberty 4T 3V Lem	150	2013	2014	B017901	**100600451**
Liberty 4T 3V Lem	150	2013	2014	B017901	**100603031**
Liberty 4T Euro3	150	2008	2008	875525	**100600911**
Liberty 4T Euro3	150	2008	2008	832703	**100601171 Secondario**
Liberty 4T Euro3	150	2008	2008	842093	**100602561 Cinghia**
Liberty 4T Sport Euro3	150	2008	2008	875525	**100600911**
Liberty 4T Sport Euro3	150	2008	2008	832703	**100601171 Secondario**
Liberty 4T Sport Euro3	150	2008	2008	842093	**100602561 Cinghia**
Liberty Iget 4T 3V Ie	150	2015	2017	1A005015	**100603011**
Liberty Moc 4T Euro3	150	2009	2013	843194	**100601161**
Liberty Moc 4T Euro3	150	2009	2013	832703	**100601171 Secondario**
Liberty Moc 4T Euro3	150	2009	2013	842093	**100602561 Cinghia**
Medley 4T Ie Abs	150	2016	2016	1A005072	**100603250**
Vespa Gl 150	150	1963	1964	90926	**100603063**
Vespa Gts 4T E4 Abs (Emea)	150	2016	2017	1A007327	**100603710**
Vespa Lt 4T 3V Ie	150	2014	2014	B018070	**100603041**
Vespa Lx	150	2005	2006	843194	**100601161**
Vespa Lx	150	2005	2006	832703	**100601171 Secondario**
Vespa Lx 4T 3V Ie - Touring	150	2012	2013	B016409	**100602820**
Vespa Lx 4T 3V Ie - Touring	150	2012	2013	B018070	**100603041**
Vespa Lx 4T Fl	150	2009	2009	843194	**100601161**
Vespa Lx 4T Fl	150	2009	2009	832703	**100601171 Secondario**
Vespa Lx Euro 3	150	2006	2008	843194	**100601161**
Vespa Lx Euro 3	150	2006	2008	832703	**100601171 Secondario**
Vespa Lx Euro 3 Ie	150	2009	2011	843194	**100601161**
Vespa Lx Touring	150	2010	2012	843194	**100601161**
Vespa P 150 X	150	1978	1981	113125	**100602753**
Vespa Primavera 4T 3V Iget Abs	150	2016	2016	B018070	**100603041**
Vespa Primavera 4T-3V	150	2013	2016	B018070	**100603041**
Vespa Px	150	2011	2016	486942	**100601191 Secondario**
Vespa Px 150	150	2011	2016	113125	**100602753**
Vespa Px 150	150	2011	2016	486942	**100601191 Secondario**
Vespa Px 150 E	150	1981	1981	113125	**100602753**
Vespa Px 150 E Arcobaleno	150	1983	1983	113125	**100602753**
Vespa Px 150 E Elestart	150	1984	1984	113125	**100602753**
Vespa Px 150 E Freno A Disco	150	1998	2001	113125	**100602753**
Vespa S 4T	150	2008	2009	843194	**100601161**
Vespa S 4T	150	2008	2009	832703	**100601171 Secondario**
Vespa S 4T Ie & College	150	2009	2012	843194	**100601161**
Vespa Sprint 150	150	1965	1974	90926	**100603063**
Vespa Sprint 4T 3V Ie	150	2015	2015	B018070	**100603041**
Vespa Sprint Sport 4T 3V Iget Abs	150	2016	2016	B018070	**100603041**
Vespa Super 150	150	1965	1979	90926	**100603063**

Modello *Model*	CC	Da *From*	A *To*	OEM	Codice RMS *RMS Code*
X8 Street Euro 2	150	2006	2008	843194	**100601161**
X8 Street Euro 2	150	2006	2008	832703	**100601171 Secondario**
X8 Street Euro 2	150	2006	2008	842093	**100602561 Cinghia**
X9 Amalfi	180	2000	2003	827936	**100600881**
Carnaby	200	2007	2008	829258	**100600991**
Cosa 1 200	200	1988	1991	252971	**100600501**
Cosa 2 200	200	1991	1997	252971	**100600501**
Liberty	200	2006	2006	487287	**100600911**
Liberty	200	2006	2006	832703	**100601171 Secondario**
Liberty 4T Euro3	200	2006	2008	875525	**100600911**
Liberty 4T Euro3	200	2006	2008	832703	**100601171 Secondario**
Liberty 4T Sport Euro3	200	2006	2007	875525	**100600911**
Liberty 4T Sport Euro3	200	2006	2007	832703	**100601171 Secondario**
Liberty Rst	200	2004	2004	487287	**100600911**
Liberty Rst	200	2004	2004	832703	**100601171 Secondario**
Liberty Sport	200	2006	2006	487287	**100600911**
Liberty Sport	200	2006	2006	832703	**100601171 Secondario**
Vespa Granturismo	200	2006	2007	831997	**100602111**
Vespa P 200 X	200	1977	1977	285352	**100602810**
Vespa Px 200 E	200	1977	1982	285352	**100602810**
Vespa Px 200 E	200	1982	1982	285352	**100602810**
Vespa Px 200 E Freno A Disco	200	1998	2001	285352	**100602810**
Vespa Px 200 E Arcobaleno	200	1983	1984	285352	**100602810**
Vespa Px 200 E Elestart	200	1981	1990	285352	**100602810**
X8	200	2005	2007	831997	**100602111**
X9	200	2002	2003	829258	**100600991**
X9 Evolution	200	2003	2003	829258	**100600991**
Ape Car P2-P3	220	1978	1985	248570	**100600620**
Ape Mp P501-P601	220	1978	1996	438014	**100600620**
Ape Tm	220	2009	2016	248570	**100600620**
Ape Tm	220	2009	2016	486942	**100601191 Secondario**
Ape Tm P602	220	1982	1983	438014	**100600620**
Ape Tm P703 Fl2	220	1999	2007	248570	**100600620**
Ape Tm P703-P703V	220	1984	2005	438014	**100600620**
Beverly	250	2006	2007	829258	**100600991**
Beverly	250	2006	2007	840476	**100601221 Secondario**
Beverly	250	2006	2007	842093	**100602561 Cinghia**
Beverly Cruiser	250	2007	2009	829258	**100600991**
Beverly Cruiser	250	2007	2009	842093	**100602561 Cinghia**
Beverly Euro 3 Mic	250	2007	2007	829258	**100600991**
Beverly Euro 3 Mic	250	2007	2007	842093	**100602561 Cinghia**
Beverly Ie Euro 3	250	2006	2008	829258	**100600991**
Beverly Ie Euro 3	250	2006	2008	842093	**100602561 Cinghia**
Beverly Rst	250	2004	2005	829258	**100600991**
Beverly Rst	250	2004	2005	840476	**100601221 Secondario**
Beverly Rst	250	2004	2005	842093	**100602561 Cinghia**
Beverly Sport	250	2006	2008	829258	**100600991**

FILTRI ARIA

AIR FILTERS

Modello *Model*	**CC**	**Da** *From*	**A** *To*	**OEM**	**Codice RMS** *RMS Code*
Beverly Sport	250	2006	2008	842093	**100602561 Cinghia**
Beverly Tourer Euro3	250	2007	2009	829258	**100600991**
Beverly Tourer Euro3	250	2007	2009	842093	**100602561 Cinghia**
Carnaby	250	2008	2008	829258	**100600991**
Carnaby	250	2008	2008	842093	**100602561 Cinghia**
Hexagon Gt-Gtx	250	1998	2000	495113	**100603751**
Mp3	250	2006	2008	831997	**100602111**
Mp3 Lt	250	2008	2009	831997	**100602111**
Mp3 Lt	250	2008	2009	842093	**100602561 Cinghia**
Mp3 Mic	250	2008	2009	831997	**100602111**
Vespa Gt 60 Euro 3	250	2006	2007	831997	**100602111**
Vespa Gt 60 Euro 3	250	2006	2007	842093	**100602561 Cinghia**
Vespa Gts	250	2005	2016	831997	**100602111**
Vespa Gts	250	2005	2016	842093	**100602561 Cinghia**
Vespa Gts Abs	250	2005	2012	831997	**100602111**
Vespa Gts Abs	250	2005	2012	842093	**100602561 Cinghia**
Vespa Gtv	250	2006	2009	831997	**100602111**
Vespa Gtv	250	2006	2009	842093	**100602561 Cinghia**
Vespa Gtv 4T Navy Euro3	250	2007	2007	831997	**100602111**
Vespa Gtv 4T Navy Euro3	250	2007	2007	842093	**100602561 Cinghia**
X Evo	250	2007	2016	831997	**100602111**
X7 Euro 3	250	2008	2008	829258	**100600991**
X7 Euro 3	250	2008	2008	842093	**100602561 Cinghia**
X8 Euro3	250	2005	2008	831997	**100602111**
X9	250	2000	2001	496406	**100600781**
X9 Evolution	250	2004	2004	829258	**100600991**
X9 Evolution	250	2004	2004	840476	**100601221 Secondario**
X9 Evolution	250	2006	2006	831997	**100602111**
X9 Evolution	250	2006	2006	840476	**100601221 Secondario**
Beverly Ie Abs E4	300	2016	2016	829258	**100600991**
Beverly Rst 4T 4V Ie Euro3	300	2010	2015	829258	**100600991**
Beverly Tourer Euro3	300	2009	2010	829258	**100600991**
Beverly Tourer Euro3	300	2009	2010	842093	**100602561 Cinghia**
Carnaby Cruiser	300	2009	2012	829258	**100600991**
Carnaby Cruiser	300	2009	2012	842093	**100602561 Cinghia**
Mp3 300 Ie Lt	300	2010	2011	831997	**100602111**
Mp3 300 Ie Mic	300	2010	2011	831997	**100602111**
Mp3 300 Lt Business - Sport Abs - Enjoy	300	2014	2015	829258	**100600991**
Mp3 4T 4V Ie Erl Ibrido	300	2010	2013	831997	**100602111**
Mp3 4T 4V Ie Lt Ibrido	300	2010	2011	831997	**100602111**
Mp3 Ie Lt- Ie Lt Sport	300	2011	2014	831997	**100602111**
Mp3 Ie Lt Touring	300	2011	2013	831997	**100602111**
Mp3 Ie Touring	300	2011	2012	831997	**100602111**
Mp3 Yourban Erl	300	2011	2015	829258	**100600991**
Mp3 Yourban Lt Erl	300	2011	2012	829258	**100600991**
Vespa Gts Ie & Touring	300	2012	2016	831997	**100602111**

Modello *Model*	**CC**	**Da** *From*	**A** *To*	**OEM**	**Codice RMS** *RMS Code*
Vespa Gts Ie & Touring	300	2012	2016	842093	**100602561 Cinghia**
Vespa Gts Ie Touring	300	2011	2012	831997	**100602111**
Vespa Gts Ie Touring	300	2011	2012	842093	**100602561 Cinghia**
Vespa Gts Super	300	2008	2016	831997	**100602111**
Vespa Gts Super	300	2008	2016	842093	**100602561 Cinghia**
Vespa Gts Super Sport	300	2010	2013	831997	**100602111**
Vespa Gts Super Sport	300	2010	2013	842093	**100602561 Cinghia**
Vespa Gtv 4T 4V Ie	300	2010	2013	831997	**100602111**
Vespa Gtv 4T 4V Ie	300	2010	2013	842093	**100602561 Cinghia**
Vespa Gtv Via Montenapoleone	300	2010	2010	831997	**100602111**
Vespa Gtv Via Montenapoleone	300	2010	2010	842093	**100602561 Cinghia**
X7 Evo Ie Euro 3	300	2009	2010	829258	**100600991**
X7 Evo Ie Euro 3	300	2009	2010	842093	**100602561 Cinghia**
Beverly 4T 4V Ie Euro3 Sport Touring	350	2011	2014	880001	**100603051**
Beverly 4T St Ie Abs	350	2016	2016	880001	**100603051**
X10 4T 4V Ie Euro3	350	2012	2015	880001	**100603051**
Beverly Euro 3	400	2006	2007	829258	**100600991**
Beverly Tourer Euro3	400	2008	2010	829258	**100600991**
Mp3	400	2007	2008	829258	**100600991**
Mp3 Ie Lt - Mp3 Ie Lt Sport	400	2008	2010	829258	**100600991**
Mp3 Ie Lt Touring	400	2011	2011	829258	**100600991**
Mp3 Mic	400	2008	2010	829258	**100600991**
Mp3 Rl Touring	400	2011	2011	829258	**100600991**
X Evo	400	2007	2011	829258	**100600991**
X8 Euro3	400	2006	2008	829258	**100600991**
Ape Calessino - Vme	420	2007	2012	614945	**100602601**
Ape Car - Max Diesel	420	1986	1996	230414	**100600631**
Ape Mp601 Classic	420	2006	2013	614945	**100602601**
Ape Poker Benzina	420	1993	1993	254999	**100600640**
Ape Poker Diesel	420	1993	1997	230414	**100600631**
Ape Tm Diesel Lcs	420	2005	2012	614945	**100602601**
Ape Tm P703-P703V Diesel	420	1987	2004	438017	**100600631**
Beverly	500	2002	2006	829258	**100600991**
Beverly Cruiser	500	2007	2012	829258	**100600991**
Beverly Euro 3	500	2006	2008	829258	**100600991**
Mp3 Lt Business Abs	500	2014	2016	829258	**100600991**
Mp3 Lt Sport - Business	500	2011	2013	829258	**100600991**
Mp3 Rl Sport - Business	500	2011	2012	829258	**100600991**
Mp3 Sport Abs	500	2014	2015	829258	**100600991**
Quargo	500	2005	2016	614945	**100602601**
X10 4T 4V Ie Euro3	500	2012	2014	829258	**100600991**
X9	500	2001	2002	487845	**100601141**
X9 Evolution	500	2003	2007	487845	**100601141**
X9 Evolution Abs	500	2006	2007	487845	**100601141**
Quargo Diesel	750	2004	2006	614945	**100602601**
Porter 1000-1300 Pick-Van	1000	1992	2009	1780187Z08000	**100602621**
Porter D120 E5	1200	2011	2015	263703	**100604990**
Porter Maxxi D120 Euro5	1200	2011	2015	263703	**100604990**
Porter 1000-1300 Pick-Van	1300	1992	2009	1780187Z08000	**100604980**
Porter 16V Pick Up-Maxxi-Gpl-4X4	1300	1998	2009	1780187Z08000	**100602621**
Porter 16V Pick Up-Maxxi-Gpl-4X4	1300	1998	2009	1780187Z08000	**100604980**



NYPSO

Modello *Model*	CC	Da *From*	A *To*	OEM	Codice RMS *RMS Code*
Porter 16V Van	1300	1998	2007	1780187Z08000	**100602621**
Porter 16V Van	1300	1998	2007	1780187Z08000	**100604980**
Porter Maxxi Up-Date	1300	2009	2010	1780187Z08000	**100602621**
Porter Maxxi Up-Date	1300	2009	2010	1780187Z08000	**100604980**
Porter Up-Date	1300	2009	2010	1780187Z08000	**100602621**
Porter Up-Date	1300	2009	2010	1780187Z08000	**100604980**
Porter Diesel 1200-1400	1400	1995	2000	263703	**100604990**
Porter Pick Diesel	1400	1998	2005	263703	**100604990**
Porter Van Diesel	1400	1998	2005	263703	**100604990**
SACHS					
Limbo 25 Ma	25	1996	1997	-	**100600371**
Limbo 25 Sa	25	1998	2000	-	**100600371**
Limbo 50 Lm	50	1997	1997	-	**100600371**
Limbo 50 M	50	1996	1997	-	**100600371**
Reggae 50	50	1996	1997	-	**100600371**
Reggae 50 Rs	50	1996	1997	-	**100600371**
Splinter 50	50	1996	1997	-	**100600371**
Squab 50	50	1997	1997	-	**100600371**
SUZUKI					
Ah50 Address	50	1992	1995	13780-40D40-000	**100600051**
Ay50Ayw Katana V-Y	50	1997	2000	13782-35E00-000	**100600841**
Uf Estilete	50	2000	2000	13782-35E00-000	**100600841**
Ux Zillion	50	1999	1999	13782-35E00-000	**100600841**
Uk110Ne Address L5	110	2015	2015	13780-40JA0-000	**100603270**
Uk110Ne Address L6	110	2016	2016	13780-40JA0-000	**100603270**
Uk110Nx Address L5	110	2015	2015	13780-40JA0-000	**100603270**
Uh125 Burgman K2-K6	125	2002	2006	13780-49F00-000	**100601231**
Uh125 Burgman K7-L0	125	2007	2010	13780-03H00-000	**100602551**
Uh125 Burgman K7-L0	125	2007	2010	13782-03H00-000	**100602521 Prefiltro**
Uh125 Burgman L1	125	2011	2012	13780-03H00-000	**100602551**
Uh125 Burgman L1	125	2011	2012	13782-03H00-000	**100602521 Prefiltro**
Uh125 Burgman L3	125	2013	2013	13780-03H00-000	**100602551**
Uh125 Burgman L3	125	2013	2013	13782-03H00-000	**100602521 Prefiltro**
Uh125 Burgman L4	125	2014	2014	13780-03H00-000	**100602551**
Uh125 Burgman L4	125	2014	2014	13782-03H00-000	**100602521 Prefiltro**
Ux Sixteen K8-L0	125	2008	2010	13785-20H00-000	**100602531**
Ux Sixteen K8-L0	125	2008	2010	13780-20H00-000	**100602541**
Ux Sixteen L1	125	2011	2011	13785-20H00-000	**100602531**
Ux Sixteen L1	125	2011	2011	13780-20H00-000	**100602541**
Uh200 Burgman K2-K6	150	2002	2006	13780-49F00-000	**100601231**
Ux Sixteen K8-L0	150	2008	2010	13785-20H00-000	**100602531**
Ux Sixteen K8-L0	150	2008	2010	13780-20H00-000	**100602541**
Ux Sixteen L1	150	2011	2011	13785-20H00-000	**100602531**
Ux Sixteen L1	150	2011	2011	13780-20H00-000	**100602541**
Uh200 Burgman K7-L0	200	2007	2010	13780-03H00-000	**100602551**
Uh200 Burgman K7-L0	200	2007	2010	13782-03H00-000	**100602521 Prefiltro**
Uh200 Burgman L1	200	2011	2012	13780-03H00-000	**100602551**
Uh200 Burgman L1	200	2011	2012	13782-03H00-000	**100602521 Prefiltro**
Uh200 Burgman L3	200	2013	2013	13780-03H00-000	**100602551**
Uh200 Burgman L3	200	2013	2013	13782-03H00-000	**100602521 Prefiltro**
Uh200 Burgman L4	200	2014	2014	13780-03H00-000	**100602551**
Uh200 Burgman L4	200	2014	2014	13782-03H00-000	**100602521 Prefiltro**
An250 Burgman K3-K6	250	2003	2006	13780-14F01-000	**100600941**

Modello *Model*	CC	Da *From*	A *To*	OEM	Codice RMS *RMS Code*
An250 Burgman W-K2	250	1998	2002	13780-14F00-000	**100600941**
An400 Burgman K3-K6	400	2003	2006	13780-14F01-000	**100600941**
An400 Burgman K7-L0	400	2007	2010	13781-05H00-000	**100602611**
An400 Burgman L1	400	2011	2011	13781-05H00-000	**100602611**
An400 Burgman L2	400	2012	2012	13781-05H00-000	**100602611**
An400 Burgman L3	400	2013	2013	13781-05H00-000	**100602611**
An400 Burgman L4	400	2014	2014	13781-05H00-000	**100602611**
An400 Burgman L5	400	2015	2015	13781-05H00-000	**100602611**
An400 Burgman L6	400	2016	2016	13781-05H00-000	**100602611**
An400 Burgman X-K2	400	1999	2002	13780-14F01-000	**100600941**
Gsr600 K6-L0	600	2006	2010	13780-44G00-000	**100603310**
Gsx-R600 K4-K5	600	2004	2005	13780-29G00-000	**100603330**
Gsx-R600 K6-K7	600	2006	2007	13780-01H00-000	**100603340**
Gsx-R600 K8-L0	600	2008	2010	13780-01H00-000	**100603340**
Gsx-R600 L1	600	2011	2011	13780-14J00-000	**100603350**
Gsx-R600 L2	600	2012	2012	13780-14J00-000	**100603350**
Gsx-R600 L3	600	2013	2013	13780-14J00-000	**100603350**
Gsx-R600 L4	600	2014	2014	13780-14J00-000	**100603350**
Gsx-R600 L5	600	2015	2015	13780-14J00-000	**100603350**
Gsx-R600 L6	600	2016	2016	13780-14J00-000	**100603350**
Gsx-R600 L7	600	2017	2017	13780-14J00-000	**100603350**
An650 Burgman L4	650	2014	2014	13780-10G00-000	**100602721**
Dl650 V-Strom K4-K6	650	2004	2006	13780-06G00-000	**100603260**
Dl650 V-Strom K7-L0	650	2007	2010	13780-27G10-000	**100603280**
Dl650 V-Strom L1	650	2011	2011	13780-27G10-000	**100603280**
Dl650 V-Strom L2	650	2012	2012	13780-27G10-000	**100603280**
Dl650A V-Strom Abs L3	650	2013	2013	13780-27G10-000	**100603280**
Dl650A V-Strom Abs L4	650	2014	2014	13780-27G10-000	**100603280**
Dl650A V-Strom Abs L5	650	2015	2015	13780-27G10-000	**100603280**
Dl650A(Ue)/Xa(Ue) V-Strom	650	2017	2017	13780-27G10-000	**100603280**
Dl650A(Ue)/Xa(Ue)L6 V-Strom	650	2016	2016	13780-27G10-000	**100603280**
Dl650Xt V-Strom	650	2015	2015	13780-27G10-000	**100603280**
Dr650Se T-V	650	1996	1997	13780-32E00-000	**100603600**
Gsf Bandit K7-K8	650	2007	2008	13780-18H00-000	**100603300**
Gsf Bandit K9-L0	650	2009	2010	13780-18H00-000	**100603300**
Gsf Bandit L1	650	2011	2011	13780-18H00-000	**100603300**
Gsf Bandit L2	650	2012	2012	13780-18H00-000	**100603300**
Gsx F K8-L0	650	2008	2010	13780-18H00-000	**100603300**
Gsx F L1	650	2011	2011	13780-18H00-000	**100603300**
Gsx F L2	650	2012	2012	13780-18H00-000	**100603300**
Sfv Gladius K9-L0	650	2009	2010	13780-44H00-000	**100603290**
Sfv Gladius L1	650	2011	2011	13780-44H00-000	**100603290**
Sfv Gladius L2	650	2012	2012	13780-44H00-000	**100603290**
Sfv Gladius L3	650	2013	2013	13780-44H00-000	**100603290**
Sfv Gladius L4	650	2014	2014	13780-44H00-000	**100603290**
Sfv650(U/A/Ua)Gladius L5	650	2015	2015	13780-44H00-000	**100603290**
Sv650A L7	650	2017	2017	13780-44H00-000	**100603290**
Xf Freewind V-K1	650	1997	2001	13780-04F00-000	**100603630**
Gsr750(A)L6	750	2016	2016	13780-44G00-000	**100603310**
Gsr750L1	750	2011	2011	13780-44G00-000	**100603310**
Gsr750L2	750	2012	2012	13780-44G00-000	**100603310**
Gsr750L3	750	2013	2013	13780-44G00-000	**100603310**
Gsr750Z(A)L4	750	2014	2014	13780-44G00-000	**100603310**
Gsr750Z(A)L5	750	2015	2015	13780-44G00-000	**100603310**
Gsx-R750 K4-K5	750	2004	2005	13780-29G00-000	**100603330**
Gsx-R750 K6-K7	750	2006	2007	13780-01H00-000	**100603340**
Gsx-R750 K8-L0	750	2008	2010	13780-01H00-000	**100603340**
Gsx-R750 L1	750	2011	2011	13780-14J00-000	**100603350**

Modello *Model*	CC	Da *From*	A *To*	OEM	Codice RMS *RMS Code*
Gsx-R750 L2	750	2012	2012	13780-14J00-000	**100603350**
Gsx-R750 L3	750	2013	2013	13780-14J00-000	**100603350**
Gsx-R750 L4	750	2014	2014	13780-14J00-000	**100603350**
Gsx-R750 L5	750	2015	2015	13780-14J00-000	**100603350**
Gsx-R750 L6	750	2016	2016	13780-14J00-000	**100603350**
Gsx-R750 L7	750	2017	2017	13780-14J00-000	**100603350**
Gsx-R750Z(Uf) L4	750	2014	2014	13780-14J00-000	**100603350**
Gsx-S750A(Z) L7	750	2017	2017	13780-44G00-000	**100603310**
Dl1000 V-Strom K2-K6	1000	2002	2006	13780-06G00-000	**100603260**
Dl1000 V-Strom K7-L0	1000	2007	2010	13780-06G00-000	**100603260**
Gsx-R1000 K9-L0	1000	2009	2010	13780-47H00-000	**100603320**
Gsx-R1000 L1	1000	2011	2011	13780-47H00-000	**100603320**
Gsf1250 Bandit K7-L0	1250	2007	2010	13780-18H00-000	**100603300**
Gsf1250 Bandit L0	1250	2010	2010	13780-18H00-000	**100603300**
Gsf1250 Bandit L1	1250	2011	2011	13780-18H00-000	**100603300**
Gsf1250S Bandit L1	1250	2011	2011	13780-18H00-000	**100603300**
Gsf1250S Bandit L2	1250	2012	2012	13780-18H00-000	**100603300**
Gsf1250Sa Bandit L5-L6	1250	2015	2016	13780-18H00-000	**100603300**
Gsx1250Fa L0	1250	2010	2010	13780-18H00-000	**100603300**
Gsx1250Fa L1	1250	2011	2011	13780-18H00-000	**100603300**
Gsx1250Fa L2	1250	2012	2012	13780-18H00-000	**100603300**
Gsx1250Fa L6	1250	2016	2016	13780-18H00-000	**100603300**
SYM					
Fiddle Ii	50	2008	2008	17211AAA000	**100602891**
Jet	50	1999	1999	17205KBN900	**100600521**
Jungle	50	1999	1999	17205KBN900	**100600521**
Red Devil	50	1999	1999	17205KBN900	**100600521**
Super Fancy	50	1998	2000	17205KBN900	**100600521**
Symphony St	50	2015	2015	17211AAA000	**100602891**
Symply	50	2007	2008	17211AAA000	**100602891**
Jet	100	1999	2000	17205KBN900	**100600521**
Gts Joymax	125	2006	2007	17211HLK000	**100602691**
Hd Eu2	125	2003	2004	17211HHA000	**100602781**
Hd Euro3	125	2007	2008	17211HHA000	**100602781**
Hd Evo	125	2005	2006	17211HHA000	**100602781**
Hd Evo Euro3	125	2007	2008	17211HHA000	**100602781**
Hd Evo Euro3	125	2010	2011	17211HHA000	**100602781**
Hd Evo Tamburo Euro3	125	2008	2009	17211HHA000	**100602781**
Hd2	125	2011	2011	17211HHA000	**100602781**
Hd2	125	2014	2014	17211HHA000	**100602781**
Joyride	125	2001	2002	17211H6B000	**100602681**
Joyride Eu2	125	2003	2004	17211HLK000	**100602691**
Joyride Euro2	125	2005	2006	17211HLK000	**100602691**
Joyride Euro3	125	2007	2007	17211HLK000	**100602691**
Joyride Evo	125	2009	2010	17211HLK000	**100602691**
Joyride Evo	125	2010	2010	17211HLK000	**100602691**
Joyride Evo	125	2013	2014	17211HLK000	**100602691**
Megalo	125	2006	2007	17211HLB000	**100602681**
Vs	125	2006	2006	17211VS1000	**100603370**
Vs Euro3	125	2007	2008	17211VS1000	**100603370**
Attila	150	2000	2001	17211H6B000	**100602681**
Joyride	150	2001	2002	17211H6B000	**100602681**
Vs	150	2006	2006	17211VS1000	**100603370**
Vs Euro3	150	2007	2008	17211VS1000	**100603370**
Hd Eu2	200	2003	2004	17211HHA000	**100602781**
Hd Euro3 I	200	2007	2007	17211HHA000	**100602781**
Hd Evo Euro2	200	2005	2006	17211HHA000	**100602781**
Hd Evo Euro3 I	200	2007	2007	17211HHA000	**100602781**
Hd Evo I Euro3	200	2010	2012	17211HHA000	**100602781**
Hd Evo I Tamburo Euro3	200	2008	2009	17211HHA000	**100602781**
Hd2 I	200	2011	2011	17211HHA000	**100602781**
Hd2 I	200	2014	2014	17211HHA000	**100602781**
Joyride	200	2003	2003	17211H6B000	**100602681**
Joyride Eu2	200	2003	2004	17211HLK000	**100602691**
Joyride Euro2	200	2005	2006	17211HLK000	**100602691**
Gts	250	2007	2008	17211HMA000	**100602571**
Gts 250	250	2006	2007	17211HMA000	**100602571**
Joymax	250	2005	2007	17211HMA000	**100602571**
Joymax Euro3 I	250	2007	2008	17211HMA000	**100602571**
Citycom	300	2008	2009	17211LEA000	**100602731**
Citycom Efi	300	2010	2011	17211LEA000	**100602731**
Citycom I Cbs	300	2012	2012	17211LEA000	**100602731**
Citycom S 300 I Cbs	300	2015	2015	17211LEA000	**100602731**
Joymax Evo	300	2009	2009	17211HMA000	**100602571**
Joymax Evo I	300	2010	2010	17211HMA000	**100602571**
Joymax I	300	2012	2012	17211HMA000	**100602571**
Joymax I	300	2014	2014	17211HMA000	**100602571**
Joymax I Abs	300	2013	2014	17211HMA000	**100602571**
Maxsym 400 Abs Euro4	400	2017	2017	17211L4A000	**100603360**
Maxsym I	400	2011	2012	17211L4A000	**100603360**
Maxsym I Abs	400	2012	2012	17211L4A000	**100603360**
YAMAHA					
Bw'S Next Generation	50	1997	1999	3VLE44510100	**100600311**
Bw'S Next Generation	50	1999	2006	3VLE44510100	**100600311**
Bw'S Original	50	1997	1999	3VLE44510100	**100600311**
Bw'S Original	50	1999	2002	3VLE44510100	**100600311**
Bw'S Original Euro2	50	2003	2003	3VLE44510100	**100600311**
Bw'S R	50	2001	2001	3VLE44510100	**100600311**
Cw Bw'S Original Euro2	50	2002	2002	3VLE44510100	**100600311**
Cw L Bw'S	50	2003	2004	3VLE44510100	**100600311**
Cw Rs Spy	50	1995	1998	3VLE44510100	**100600311**
Cw Sp Bw'S Original Euro2	50	2002	2002	3VLE44510100	**100600311**
Ew Slider	50	2000	2002	3VLE44510100	**100600311**
Ns50F Aerox F	50	2014	2016	5C3E44510000	**100602791**
Yh Why	50	1998	1998	5EUE44510000	**100600351**
Yh Why	50	2001	2002	5EUE44510000	**100600351**
Yh Why	50	2006	2006	5EUE44510000	**100600351**
Yh Why Euro1	50	1999	2000	5EUE44510000	**100600351**
Yh Why Euro2	50	2003	2005	5EUE44510000	**100600351**
Yn F Neo'S 4	50	2009	2012	5C3E44510000	**100602791**
Yn F Neo'S 4	50	2012	2015	5C3E44510000	**100602791**
Gpd125A N-Max	125	2015	2015	2DPE44510000	**100602991**
Gpd125-A N-Max	125	2017	2017	2DPE44510000	**100602991**
Gpd125-A N-Max	125	2018	2018	2DPE44510000	**100602991**
Hw Xenter	125	2012	2016	52SE44510000	**100602861**
Hw Xenter	125	2012	2016	52SE54080000	**100602871 Carter**
Mw125 Tricity	125	2014	2014	2CME44510000	**100603001**
Nxc Cygnus X	125	2004	2011	5TYE44510000	**100602741**
Vp X-City	125	2008	2011	1B9144510000	**100602411 Aspirazione**
Xc Cygnus R	125	1999	1999	4CWE44510200	**100600801**
Xc Cygnus R	125	1999	2003	4CWE54071000	**100602011 Variatore**
Xc K Cygnus R	125	1997	1998	4CWE44510200	**100600801**
Xc K Cygnus R	125	1997	1998	4CWE54071000	**100602011 Variatore**
Xc T Cygnus	125	1995	1998	4CWE44510200	**100600801**



NYPSO

Modello *Model*	CC	Da *From*	A *To*	OEM	Codice RMS *RMS Code*
Xc T Cygnus	125	1995	1998	4CWE54071000	**100602011 Variatore**
Xc125R Majesty S	125	2014	2014	52SE44510000	**100602861**
Xc125R Majesty S	125	2014	2014	52SE54080000	**100602871 Carter**
Xn Teo'S	125	2000	2000	5DS154070100	**100600711**
Xn Teo'S	125	2000	2000	5DS154070100	**100600871 Variatore**
Xq Maxster	125	2001	2002	5DS154070100	**100600711**
Xq Maxster	125	2001	2002	5DSE44510000	**100600791**
Xq Maxster	125	2001	2002	5DS154070100	**100600871 Variatore**
Ybr	125	2005	2005	5VLE44501000	**100603550**
Ybr	125	2007	2009	5VLE44501000	**100603550**
Ybr	125	2010	2012	5VLE44501100	**100603550**
Ybr125Ed	125	2014	2014	5VLE44501200	**100603550**
Yp125 Majesty	125	1998	2000	5DS154070100	**100600711**
Yp125 Majesty	125	1998	2000	5DSE44510000	**100600791**
Yp125 Majesty	125	1998	2000	5DS154070100	**100600871 Variatore**
Yp125 Majesty	125	2001	2002	5DS154070100	**100600711**
Yp125 Majesty	125	2001	2002	5DSE44510100	**100600791**
Yp125 Majesty	125	2001	2002	5DS154070100	**100600871 Variatore**
Yp125E Majesty	125	2003	2005	5DS154070100	**100600711**
Yp125E Majesty	125	2003	2005	5DSE44510100	**100600791**
Yp125E Majesty	125	2003	2005	5DS154070100	**100600871 Variatore**
Yp125E Majesty	125	2006	2006	5DS154070100	**100600711**
Yp125E Majesty	125	2006	2006	5DSE44510000	**100600791**
Yp125E Majesty	125	2006	2006	5DS154070100	**100600871 Variatore**
Yp125E Majesty	125	2007	2007	5DS154070100	**100600711**
Yp125E Majesty	125	2007	2007	5DSE44510000	**100600791**
Yp125E Majesty	125	2007	2007	5DS154070100	**100600871 Variatore**
Yp125E Majesty	125	2008	2008	5DS154070100	**100600711**
Yp125E Majesty	125	2008	2008	5DSE44510100	**100600791**
Yp125E Majesty	125	2008	2008	5DS154070100	**100600871 Variatore**
Yp125E Majesty	125	2009	2009	5DS154070100	**100600711**
Yp125E Majesty	125	2009	2009	5DSE44510100	**100600791**
Yp125E Majesty	125	2009	2009	5DS154070100	**100600871 Variatore**
Yp125R X-Max	125	2006	2012	1B9144510000	**100602411 Aspirazione**
Yp125R X-Max Abs	125	2011	2011	1B9144510000	**100602411 Aspirazione**
Yw Bw'S	125	2010	2010	5S9E44510000	**100602931**
Gpd150-A N-Max	150	2017	2017	2DPE44510000	**100602991**
Gpd150-A N-Max	150	2018	2018	2DPE44510000	**100602991**
Hw Xenter	150	2012	2016	52SE44510000	**100602861**
Hw Xenter	150	2012	2016	52SE54080000	**100602871 Carter**
Xn Teo'S	150	2001	2002	5DS154070100	**100600711**
Xn Teo'S	150	2001	2002	5DS154070100	**100600871 Variatore**
Xq Maxster	150	2001	2002	5DS154070100	**100600711**
Xq Maxster	150	2001	2002	5DSE44510000	**100600791**
Xq Maxster	150	2001	2002	5DS154070100	**100600871 Variatore**
Yp150 Majesty	150	2000	2000	5DSE44510000	**100600791**

Modello *Model*	CC	Da *From*	A *To*	OEM	Codice RMS *RMS Code*
Yp150 Majesty	150	2000	2000	5DS154070000	**100600871 Variatore**
Yp150 Majesty	150	2001	2002	5DS154070100	**100600711**
Yp150 Majesty	150	2001	2002	5DSE44510100	**100600791**
Yp150 Majesty	150	2001	2002	5DS154070100	**100600871 Variatore**
Yp180E Majesty	180	2003	2006	5DS154070100	**100600711**
Yp180E Majesty	180	2003	2006	5DSE44510100	**100600791**
Yp180E Majesty	180	2003	2006	5DS154070100	**100600871 Variatore**
Vp X-City	250	2007	2007	1B9144510000	**100602411 Aspirazione**
Vp X-City	250	2007	2007	5GM154070000	**100602421 Variatore**
Vp X-City	250	2008	2008	1B9144510000	**100602411 Aspirazione**
Vp X-City	250	2008	2008	5GM154070000	**100602421 Variatore**
Vp X-City	250	2009	2012	1B9144510000	**100602411 Aspirazione**
Vp X-City	250	2009	2015	5GM154070000	**100602421 Variatore**
Yp250 Majesty	250	1996	1998	4HC144510000	**100600331**
Yp250 Majesty	250	1996	1998	4HC154070000	**100602001 Variatore**
Yp250 Majesty	250	2000	2001	4HC144510000	**100600331**
Yp250 Majesty	250	2000	2001	5GM154070000	**100602421 Variatore**
Yp250 Majesty	250	2002	2003	4HC144510000	**100600331**
Yp250 Majesty	250	2002	2003	5GM154070000	**100602421 Variatore**
Yp250 Majesty Abs	250	2003	2003	4HC144510000	**100600331**
Yp250 Majesty Abs	250	2003	2003	5GM154070000	**100602421 Variatore**
Yp250 Majesty Dx	250	1998	1998	4HC144510000	**100600331**
Yp250 Majesty Dx	250	1998	1998	4HC154070000	**100602001 Variatore**
Yp250 Majesty Dx	250	1999	1999	4HC144510000	**100600331**
Yp250 Majesty Dx	250	1999	1999	4HC154070000	**100602001 Variatore**
Yp250R Black X-Max	250	2009	2009	1B9144510000	**100602411 Aspirazione**
Yp250R Black X-Max	250	2009	2009	5GM154070000	**100602421 Variatore**
Yp250R X-Max	250	2005	2006	1B9144510000	**100602411 Aspirazione**
Yp250R X-Max	250	2005	2006	5GM154070000	**100602421 Variatore**
Yp250R X-Max	250	2007	2009	1B9144510000	**100602411 Aspirazione**
Yp250R X-Max	250	2007	2009	5GM154070000	**100602421 Variatore**
Yp250R X-Max	250	2010	2012	1B9144510000	**100602411 Aspirazione**
Yp250R X-Max	250	2010	2012	5GM154070000	**100602421 Variatore**
Yp250R X-Max	250	2012	2016	5GM154070000	**100602421 Variatore**
Yp250R X-Max Sport	250	2011	2012	1B9144510000	**100602411 Aspirazione**
Yp250R X-Max Sport	250	2011	2012	5GM154070000	**100602421 Variatore**
Yp250Ra X-Max Abs	250	2011	2012	1B9144510000	**100602411 Aspirazione**
Yp250Ra X-Max Abs	250	2011	2012	5GM154070000	**100602421 Variatore**

Modello *Model*	CC	Da *From*	A *To*	OEM	Codice RMS *RMS Code*
Yp250Ra X-Max Abs	250	2012	2016	5GM154070000	**100602421 Variatore**
Czd300-A X-Max	300	2017	2017	B74WE4450000	**100603680**
Czd300-A X-Max	300	2017	2017	B74E54070000	**100603730 Carter**
Czd300-A X-Max	300	2018	2018	B74WE4450000	**100603680**
Czd300-A X-Max	300	2018	2018	B74E54070000	**100603730 Carter**
Xc Versity	300	2003	2003	5SEE44510000	**100600851**
Xc Versity	300	2003	2003	5GM154070000	**100602421 Variatore**
Xc Versity	300	2004	2005	5SEE44510000	**100600851**
Xc Versity	300	2004	2005	5GM154070000	**100602421 Variatore**
Xc Versity	300	2006	2006	5SEE44510000	**100600851**
Xc Versity	300	2006	2006	5GM154070000	**100602421 Variatore**
Mt-03A	320	2016	2016	1WDE44510000	**100603620**
Mt-03A	320	2018	2018	1WDE44510000	**100603620**
Yzf-R3A	320	2015	2016	1WDE44510000	**100603620**
Yzf-R3A	320	2018	2018	1WDE44510000	**100603620**
Sr400	400	2014	2016	4B5144510000	**100602441 Aspirazione**
Yp400 Majesty	400	2004	2005	5RU144513000	**100602331 Sinistro**
Yp400 Majesty	400	2004	2005	5RU144612000	**100602341 Destro**
Yp400 Majesty	400	2004	2005	5RU154070200	**100602351 Variatore**
Yp400 Majesty	400	2006	2006	5RU144513000	**100602331 Sinistro**
Yp400 Majesty	400	2006	2006	5RU144612000	**100602341 Destro**
Yp400 Majesty	400	2006	2006	5RU154070200	**100602351 Variatore**
Yp400 Majesty	400	2007	2008	5RU144513000	**100602331 Sinistro**
Yp400 Majesty	400	2007	2008	5RU144612000	**100602341 Destro**
Yp400 Majesty	400	2007	2008	5RU154070200	**100602351 Variatore**
Yp400 Majesty	400	2009	2011	5RU144513000	**100602331 Sinistro**
Yp400 Majesty	400	2009	2011	5RU144612000	**100602341 Destro**
Yp400 Majesty	400	2009	2011	5RU154070200	**100602351 Variatore**
Yp400 Majesty Abs	400	2007	2007	5RU144513000	**100602331 Sinistro**
Yp400 Majesty Abs	400	2007	2007	5RU144612000	**100602341 Destro**
Yp400 Majesty Abs	400	2007	2007	5RU154070200	**100602351 Variatore**
Yp400 Majesty Abs	400	2008	2008	5RU144513000	**100602331 Sinistro**
Yp400 Majesty Abs	400	2008	2008	5RU144612000	**100602341 Destro**
Yp400 Majesty Abs	400	2008	2008	5RU154070200	**100602351 Variatore**
Yp400 Majesty Abs	400	2009	2011	5RU144513000	**100602331 Sinistro**
Yp400 Majesty Abs	400	2009	2011	5RU144612000	**100602341 Destro**
Yp400 Majesty Abs	400	2009	2011	5RU154070200	**100602351 Variatore**

Modello *Model*	CC	Da *From*	A *To*	OEM	Codice RMS *RMS Code*
Yp400R X-Max	400	2013	2016	5RU154070200	**100602351 Variatore**
Yp400R X-Max Momodesign	400	2014	2014	5RU154070200	**100602351 Variatore**
Yp400Ra X-Max Abs	400	2014	2017	5RU154070200	**100602351 Variatore**
Yp400Ra X-Max Ironmax Abs	400	2016	2016	5RU154070200	**100602351 Variatore**
Yp400Ra X-Max Momodesign Abs	400	2014	2014	5RU154070200	**100602351 Variatore**
Xp T-Max	500	2001	2003	4BH144510100	**100602201**
Xp T-Max	500	2001	2003	5GJ154070100	**100602361 Variatore**
Xp T-Max	500	2001	2003	5GJ154080000	**100602371 Puleggia**
Xp T-Max	500	2004	2005	4BH144510100	**100602201**
Xp T-Max	500	2004	2005	5GJ154070100	**100602361 Variatore**
Xp T-Max	500	2004	2005	5GJ154080000	**100602371 Puleggia**
Xp T-Max	500	2006	2006	4BH144510000	**100602201**
Xp T-Max	500	2006	2006	5GJ154070100	**100602361 Variatore**
Xp T-Max	500	2006	2006	5GJ154080000	**100602371 Puleggia**
Xp T-Max	500	2007	2007	4BH144510000	**100602201**
Xp T-Max	500	2007	2007	5GJ154070100	**100602361 Variatore**
Xp T-Max	500	2007	2007	5GJ154080000	**100602371 Puleggia**
Xp T-Max	500	2008	2008	4B5154070000	**100602491**
Xp T-Max	500	2008	2008	5GJ154080000	**100602371 Puleggia**
Xp T-Max	500	2008	2008	4B5144510000	**100602441 Aspirazione**
Xp T-Max	500	2009	2011	4B5154070000	**100602491**
Xp T-Max	500	2009	2011	5GJ154080000	**100602371 Puleggia**
Xp T-Max	500	2009	2011	4B5144510000	**100602441 Aspirazione**
Xp T-Max Abs	500	2005	2005	4BH144510000	**100602201**
Xp T-Max Abs	500	2005	2005	5GJ154070100	**100602361 Variatore**
Xp T-Max Abs	500	2005	2005	5GJ154080000	**100602371 Puleggia**
Xp T-Max Abs	500	2006	2006	4BH144510000	**100602201**
Xp T-Max Abs	500	2006	2006	5GJ154070100	**100602361 Variatore**
Xp T-Max Abs	500	2006	2006	5GJ154080000	**100602371 Puleggia**
Xp T-Max Abs	500	2007	2007	4BH144510000	**100602201**
Xp T-Max Abs	500	2007	2007	5GJ154070100	**100602361 Variatore**
Xp T-Max Abs	500	2007	2007	5GJ154080000	**100602371 Puleggia**
Xp T-Max Abs	500	2008	2011	4B5154070000	**100602491**
Xp T-Max Abs	500	2008	2011	5GJ154080000	**100602371 Puleggia**
Xp T-Max Abs	500	2008	2011	4B5144510000	**100602441 Aspirazione**
Xp T-Max Abs Sv	500	2010	2011	4B5154070000	**100602491**
Xp T-Max Abs Sv	500	2010	2011	5GJ154080000	**100602371 Puleggia**
Xp T-Max Abs Sv	500	2010	2011	4B5144510000	**100602441 Aspirazione**



NYPSO

Modello *Model*	CC	Da *From*	A *To*	OEM	Codice RMS *RMS Code*
Xp T-Max Black Max	500	2006	2006	4BH144510000	**100602201**
Xp T-Max Black Max	500	2006	2006	5GJ154070100	**100602361 Variatore**
Xp T-Max Black Max	500	2006	2006	5GJ154080000	**100602371 Puleggia**
Xp T-Max Black Max-Night Max	500	2007	2007	4BH144510000	**100602201**
Xp T-Max Black Max-Night Max	500	2007	2007	5GJ154070100	**100602361 Variatore**
Xp T-Max Black Max-Night Max	500	2007	2007	5GJ154080000	**100602371 Puleggia**
Xp T-Max Sv	500	2011	2011	4B5154070000	**100602491**
Xp T-Max Sv	500	2011	2011	5GJ154080000	**100602371 Puleggia**
Xp T-Max Sv	500	2011	2011	4B5144510000	**100602441 Aspirazione**
Xp T-Max White Max	500	2010	2010	4B5154070000	**100602491**
Xp T-Max White Max	500	2010	2010	5GJ154080000	**100602371 Puleggia**
Xp T-Max White Max	500	2010	2010	4B5144510000	**100602441 Aspirazione**
Xp T-Max	530	2012	2012	4B5144510000	**100602441 Aspirazione**
Xp T-Max	530	2012	2012	59C154080000	**100602711 Puleggia**
Xp T-Max	530	2012	2012	59C154070000	**100602881 Carter**
Xp T-Max	530	2013	2014	4B5144510000	**100602441 Aspirazione**
Xp T-Max	530	2013	2014	59C154080000	**100602711 Puleggia**
Xp T-Max	530	2013	2014	59C154070000	**100602881 Carter**
Xp T-Max	530	2015	2016	4B5144510000	**100602441 Aspirazione**
Xp T-Max	530	2015	2016	59C154080000	**100602711 Puleggia**
Xp T-Max	530	2015	2016	59C154070000	**100602881 Carter**
Xp T-Max Abs	530	2012	2012	4B5144510000	**100602441 Aspirazione**
Xp T-Max Abs	530	2012	2012	59C154080000	**100602711 Puleggia**
Xp T-Max Abs	530	2012	2012	59C154070000	**100602881 Carter**
Xp T-Max Abs	530	2013	2014	4B5144510000	**100602441 Aspirazione**
Xp T-Max Abs	530	2013	2014	59C154080000	**100602711 Puleggia**
Xp T-Max Abs	530	2013	2014	59C154070000	**100602881 Carter**
Xp T-Max Abs	530	2015	2016	4B5144510000	**100602441 Aspirazione**
Xp T-Max Abs	530	2015	2016	59C154080000	**100602711 Puleggia**
Xp T-Max Abs	530	2015	2016	59C154070000	**100602881 Carter**
Xp T-Max Sp	530	2015	2015	4B5144510000	**100602441 Aspirazione**
Xp T-Max Sp	530	2015	2015	59C154080000	**100602711 Puleggia**
Xp T-Max Sp	530	2015	2015	59C154070000	**100602881 Carter**
Xp T-Max Sp Abs	530	2015	2016	4B5144510000	**100602441 Aspirazione**
Xp T-Max Sp Abs	530	2015	2016	59C154080000	**100602711 Puleggia**
Xp T-Max Sp Abs	530	2015	2016	59C154070000	**100602881 Carter**

Modello *Model*	CC	Da *From*	A *To*	OEM	Codice RMS *RMS Code*
Xp530-A T-Max Sx	530	2017	2017	BC3144510000	**100603720**
Xp530-A T-Max Sx	530	2017	2017	BC3154070000	**100603700 Variatore**
Xp530-A T-Max Sx	530	2017	2019	59C154080000	**100602711 Puleggia**
Xp530-A T-Max Sx	530	2018	2018	BC3144510000	**100603720**
Xp530-A T-Max Sx	530	2018	2018	BC3154070000	**100603700 Variatore**
Xp530D-A T-Max Dx	530	2017	2017	BC3144510000	**100603720**
Xp530D-A T-Max Dx	530	2017	2017	BC3154070000	**100603700 Variatore**
Xp530D-A T-Max Dx	530	2017	2019	59C154080000	**100602711 Puleggia**
Xp530D-A T-Max Dx	530	2018	2018	BC3144510000	**100603720**
Xp530D-A T-Max Dx	530	2018	2018	BC3154070000	**100603700 Variatore**
Xp530E-A T-Max	530	2017	2017	BC3144510000	**100603720**
Xp530E-A T-Max	530	2017	2017	BC3154070000	**100603700 Variatore**
Xp530E-A T-Max	530	2017	2018	59C154080000	**100602711 Puleggia**
Xp530E-A T-Max	530	2018	2018	BC3144510000	**100603720**
Xp530E-A T-Max	530	2018	2018	BC3154070000	**100603700 Variatore**
Xv Dx Virago	535	1999	2001	2GV144510000	**100603560**
Xv Se Virago	535	1988	1988	2GV144510000	**100603560**
Xv Virago	535	1989	1995	2GV144510000	**100603560**
Fz6	600	2004	2007	5VX144510000	**100603400**
Fz6 Fazer	600	2004	2007	5VX144510000	**100603400**
Fz6 Fazer Abs	600	2006	2007	5VX144510000	**100603400**
Fz6 Fazer S2	600	2007	2008	5VX144510000	**100603400**
Fz6 Fazer S2 Abs	600	2008	2008	5VX144510000	**100603400**
Fz6 Ns	600	2005	2006	5VX144510000	**100603400**
Fz6 S2	600	2007	2008	5VX144510000	**100603400**
Xj6-F Diversion	600	2010	2011	20S144510000	**100603530**
Xj6-Fa Diversion Abs	600	2010	2011	20S144510000	**100603530**
Xj6-N	600	2009	2011	20S144510000	**100603530**
Xj6-N	600	2013	2013	20S144510000	**100603530**
Xj6-N Sp	600	2013	2013	20S144510000	**100603530**
Xj6-Na Abs	600	2013	2015	20S144510000	**100603530**
Xj6-S Diversion	600	2009	2011	20S144510000	**100603530**
Xj6-S Diversion	600	2013	2015	20S144510000	**100603530**
Xj6-S Diversion Abs	600	2013	2015	20S144510000	**100603530**
Xt E	600	1990	2002	3TB144510200	**100603640**
Xt K	600	1991	1993	3TB144510200	**100603640**
Xt Z Tenere	600	1986	1987	1VJ144510000	**100603510**
Xt Z Tenere	600	1988	1990	2RW144510000	**100603520**
Yzf R6 & Limited Edition 07	600	2006	2006	2C0144500000	**100603470**
Yzf R6 50Th	600	2012	2012	13S144502000	**100603490**
Yzf-R6	600	1999	2000	5EB144510000	**100603500**
Yzf-R6	600	2007	2007	2C0144500100	**100603470**
Yzf-R6	600	2008	2009	13S144500000	**100603480**
Yzf-R6	600	2010	2016	13S144502000	**100603490**
Yzf-R6	600	2017	2017	13S144500000	**100603480**
Xvs A Drag Star Classic	650	1998	2002	4TR144510000	**100603380**
Xvs A Drag Star Classic	650	2004	2006	4TR144510000	**100603380**
Xvs Drag Star	650	1997	2002	4TR144510000	**100603380**
Mt-03	660	2006	2012	5VKE44510000	**100603410**
Xt660R	660	2004	2011	5VKE44510000	**100603410**
Xt660R	660	2014	2014	5VKE44510000	**100603410**
Xt660X	660	2004	2011	5VKE44510000	**100603410**

Modello *Model*	**CC**	**Da** *From*	**A** *To*	**OEM**	**Codice RMS** *RMS Code*
Xt660X	660	2014	2014	5VKE44510000	**100603410**
Xt660Z Tenere	660	2008	2015	11DE44510000	**100603610**
Xt660Za Tenere	660	2011	2011	11DE44510000	**100603610**
Xt660Za Tenere	660	2015	2015	11DE44510000	**100603610**
Mt-07	700	2014	2016	1WS144500000	**100603420**
Mt-07 Mc Moto Cage	700	2014	2014	1WS144500000	**100603420**
Mt-07A	700	2017	2017	1WS144500000	**100603420**
Mt-07A Abs	700	2014	2016	1WS144500000	**100603420**
Mt-07A Mc Moto Cage	700	2014	2014	1WS144500000	**100603420**
Mtt690-A Tracer	700	2016	2016	1WS144500000	**100603420**
Xsr700	700	2016	2017	1WS144500000	**100603420**
Fz8-N	800	2011	2013	2D1144510000	**100603390**
Fz8-N	800	2015	2015	2D1144510000	**100603390**
Fz8-Na	800	2011	2013	2D1144510000	**100603390**
Fz8-Na	800	2015	2015	2D1144510000	**100603390**
Fz8-S	800	2011	2011	2D1144510000	**100603390**
Fz8-S	800	2015	2015	2D1144510000	**100603390**
Fz8-Sa	800	2011	2015	2D1144510000	**100603390**
Mt-09	850	2014	2015	1RC144510000	**100603590**
Mt-09 (Mtn850-A)	850	2017	2017	1RC144510000	**100603590**
Mt-09A Abs	850	2014	2016	1RC144510000	**100603590**
Mt-09A Tracer	850	2015	2017	1RC144510000	**100603590**
Xsr900	850	2016	2016	1RC144510000	**100603590**
Fz1	1000	2006	2009	2D1144510000	**100603390**
Fz1 Fazer	1000	2006	2012	2D1144510000	**100603390**
Fz1 Fazer Abs	1000	2007	2008	2D1144510000	**100603390**
Fz1 Fazer Abs	1000	2011	2012	2D1144510000	**100603390**
Fz1-N	1000	2011	2011	2D1144510000	**100603390**
Fz1-Na	1000	2010	2011	2D1144510000	**100603390**
Gts	1000	1993	1993	4BH144510000	**100602201**
Gts A (Abs)	1000	1993	1993	4BH144510000	**100602201**
Yzf-R1	1000	2002	2003	5PW144510000	**100603430**
Yzf-R1	1000	2004	2006	5VY144510000	**100603440**
Yzf-R1	1000	2007	2008	4C8144510000	**100603450**
Yzf-R1	1000	2009	2014	14B144510000	**100603460**
Yzf-R1Sp	1000	2006	2006	5VY144510000	**100603440**

100600011

APRILIA: R.O. AP8201378



100600021

APRILIA: R.O. AP8201583



100600031

APRILIA: R.O. AP8201683



100600041

APRILIA: R.O. AP8102582

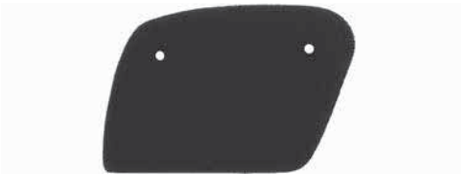

100600051

ATALA
SUZUKI: R.O. 13780-40D40-000

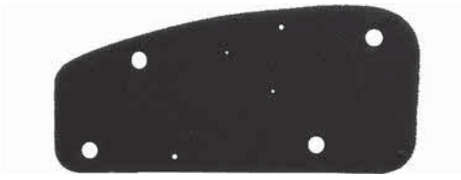

100600061

BENELLI: R.O. R72340011A0
BETA
MALAGUTI: R.O. 06604500
MBK - YAMAHA: R.O. 3KJ144510000



100600081

GILERA - PIAGGIO: R.O. 478240



100600091

GILERA - PIAGGIO: R.O. 433437



100600111

GILERA - PIAGGIO: R.O. 479748



100600121

APRILIA: R.O. AP8102943
GILERA - PIAGGIO: R.O. 480084
ITALJET

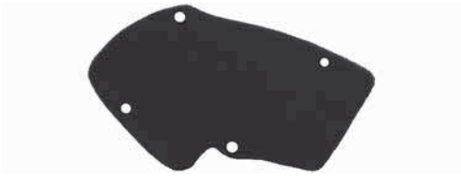

100600131

PEUGEOT: R.O. 705260



100600141

HONDA: R.O. 17205GJ4760



100600171

HONDA: R.O. 17205GAV700

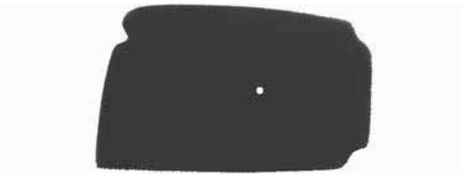

100600201

HONDA: R.O. 17205GBY900



100600211

HONDA: R.O. 17205GCG930

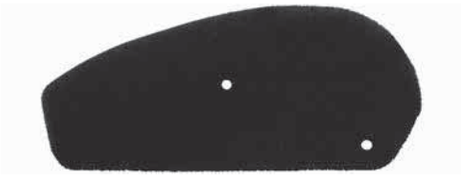

100600221

HONDA

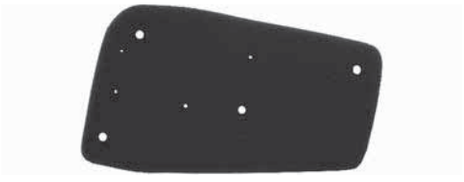

100600231

HONDA: R.O. 17205GBM750



100600241

ITALJET



100600261

KYMCO: R.O. 00166204



100600271

KYMCO: R.O. 00163101 - 00163013

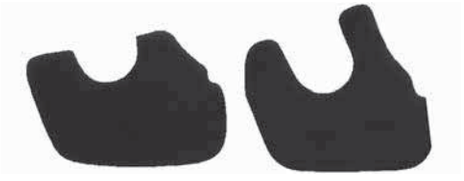

100600281

KYMCO: R.O. 00163892



100600291

MALAGUTI: R.O. 06605500



100600301

MALAGUTI: R.O. 06606600

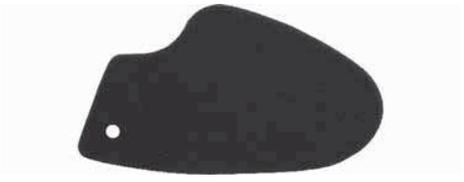

100600311

MBK - YAMAHA: R.O. 3VLE44510100



100600331

BENELLI: R.O. R72317001AZ
MALAGUTI: R.O. 06608100
MBK - YAMAHA: R.O. 4HC144510000



100600351

MBK - YAMAHA: R.O. 5EUE44510000



100600361

PEUGEOT: R.O. 724064



100600371

PEUGEOT: R.O. 730199
HERCULES
SACHS



100600391

PEUGEOT: R.O. 727905



100600401

PIAGGIO: R.O. 482738



100600411

PIAGGIO: R.O. 257369



100600421

BENELLI: R.O. R72340061AO
ITALJET: R.O. 240436478
PIAGGIO: R.O. 436478



100600431

GILERA: R.O. 431838
PIAGGIO: R.O. 834741



100600441

PIAGGIO: R.O. 478536



100600451

PIAGGIO: R.O. B017901



100600461

DERBI - PIAGGIO: R.O. 431587



100600471

PIAGGIO: R.O. 434364 - 434363



100600481

PIAGGIO: R.O. 431780



100600501

PIAGGIO: R.O. 252971



100600511

PEUGEOT



100600521

KYMCO: R.O. 00166204-17205KEB7000
PEUGEOT
SYM: R.O. 17205KBN900



100600610
100600611

PIAGGIO: R.O. 260569



100600620

UFI

PIAGGIO: R.O. 248570



100600631

PIAGGIO: R.O. 230414



100600640

UFI

PIAGGIO: R.O. 25499



100600651

APRILIA: R.O. AP8102832



100600661

APRILIA: R.O. AP8102860



100600691

PEUGEOT: R.O. 737534



100600701

PEUGEOT: R.O. 737351



100600711

YAMAHA: R.O. 1B9154070000



100600731

KYMCO: R.O. 00162993



100600741

KYMCO: R.O. 00162475



100600791

ITALJET
MALAGUTI: R.O. 06612400
MBK - YAMAHA: R.O. 5DSE44510000



100600752

KYMCO: R.O. 00162953



100600781

HONDA: R.O. 17210KFG010
PIAGGIO: R.O. 496406



100600801

MBK - YAMAHA: R.O. 4CWE44510200



100600811

HONDA: R.O. 17205KEY900

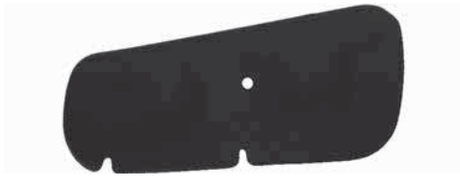

100600821

MALAGUTI: R.O. 06608800



100600831

MALAGUTI: R.O. 06609100

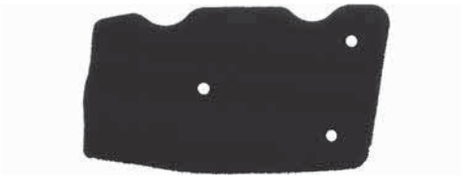

100600841

SUZUKI: R.O. 13782-35E00-000

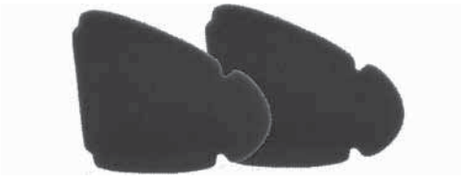

100600851

MBK - YAMAHA: R.O. 5SEE44510000



100600861

APRILIA: R.O. AP8102965



100600871

Filtro aria variatore | *CVT air filter*

MBK - YAMAHA: R.O. 5D5154070100



100600881

GILERA - PIAGGIO: R.O. 827936



100600891

DERBI - PIAGGIO: R.O. 487401



100600901

PIAGGIO



100600911

PIAGGIO: R.O. 487287



100600921

DERBI - GILERA - PIAGGIO: R.O. 487719



100600931

PEUGEOT: R.O. 747486



100600941

SUZUKI: R.O. 13780-14F01-000



100600951

APRILIA: R.O. AP8202138



100600971

CAGIVA - DERBI: R.O. 00G03202251



100600981

PIAGGIO: R.O. 827694



100600991

APRILIA - DERBI - GILERA - PIAGGIO: R.O. 829258
MALAGUTI: R.O. 06614100



100601132

HONDA: R.O. 17210-KGF-900



100601133

Confezione 50 Pz | *50 Pcs Packing*
HONDA: R.O. 17210-KGF-900



100601141

GILERA - PIAGGIO: R.O. 487845
MALAGUTI: R.O. 06615400



100601151

APRILIA: R.O. AP8104242



100601161

DERBI - PIAGGIO: R.O. 843194



100601171

Filtro aria secondario | *Secondary air filter*
DERBI - PIAGGIO: R.O: 832703



100601181

Filtro aria secondario | *Secondary air filter*
APRILIA: R.O. AP8570092-832972
DERBI - PIAGGIO: R.O: 832972



100601191

Filtro aria secondario | *Secondary air filter*

DERBI - GILERA - PIAGGIO: R.O. 486942



100601201

MALAGUTI: R.O. 06610300

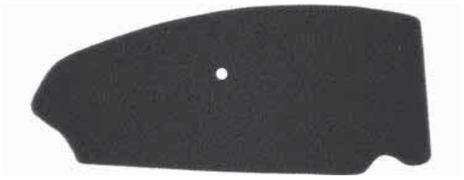

100601211

MALAGUTI: R.O. 06626100



100601221

Filtro aria secondario | *Secondary air filter*

DERBI - PIAGGIO: R.O. 840476



100601231

SUZUKI: R.O. 13780-49F00-000



100601301

APRILIA: R.O. AP8202302



100601311

APRILIA: R.O. AP8202443



100601321

KYMCO: R.O. 00163571 - 17205KEB7-900



100601331

KYMCO: R.O. 00162309 - 17205-KFA6-900



100602001

Filtro aria variatore | *CVT air filter*

MALAGUTI: R.O. 06607900
YAMAHA: R.O. 4HC154070000



100602011

Filtro aria variatore | *CVT air filter*

MBK - YAMAHA: R.O. 4CWE54071000



100602021

MALAGUTI: R.O. 06611700



100602091

APRILIA: R.O. AP8202262



100602101

Filtro aria aspirazione | *Induction*

APRILIA: R.O. AP8202249



100602111

PIAGGIO: R.O. 831997



100602181

Filtro aria variatore | *CVT air filter*

LML

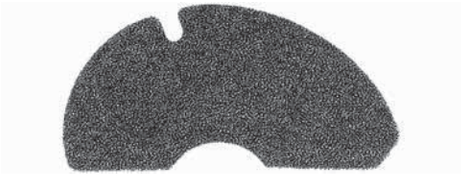

100602201

YAMAHA: R.O. 4BH144510100



100602220

BMW: R.O. 13722345027



100602230

UFI

APRILIA: R.O. AP8102715



100602240

UFI

GUZZI: R.O. GU17113651

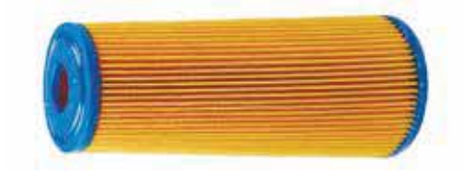

100602250

UFI

BMW: R.O. 13721254382



100602280

UFI

GUZZI: R.O. GU28113660



100602300

UFI

GUZZI: R.O. GU30113600



100602311

KYMCO: R.O. 00162377
MALAGUTI: R.O. 06611003



100602320

UFI

CASALINI
LIGIER



100602331

Filtro aria sinistro | *Left air filter*
YAMAHA: R.O. 5RU144513000



100602341

Filtro aria destro | *Right air filter*
YAMAHA: R.O. 5RU144612000 - 1SDE44610000



100602351

Filtro aria variatore | *CVT air filter*
YAMAHA: R.O. 5RU154070200



100602361

Filtro aria variatore | *CVT air filter*
YAMAHA: R.O. 5GJ154070100



100602371

Filtro aria puleggia | *Pulley air filter*
YAMAHA: R.O. 5GJ154080000



100602381

HONDA: R.O. 17210KTW900



100602391

KYMCO: R.O. 00164044



100602401

KYMCO: R.O. 00163126



100602411

Filtro aria aspirazione | *Induction*

YAMAHA: R.O. 1B9144510000 - 37PE44510000



100602421

Filtro aria variatore | *CVT air filter*

MBK - YAMAHA: R.O. 5GM154070000



100602431

KYMCO: R.O. 00162380 - 1721A-LLJ3-E00



100602441

Filtro aria aspirazione | *Induction*

YAMAHA: R.O. 4B5144510000



100602451

KYMCO: R.O. 00101074



100602471

APRILIA: R.O. JC13721X92000



100602481

PEUGEOT: R.O. 730199



100602491

YAMAHA: R.O. 4B5154070000



100602501

MALAGUTI: R.O. 65046700



FILTRI ARIA

AIR FILTERS

100602511

Filtro aria variatore | *CVT air filter*

MALAGUTI: R.O. 65041100



100602521

Prefiltro aria | *First air filter*

SUZUKI: R.O. 13782-031100-000



100602531

SUZUKI: R.O. 13785-20H00-000



100602541

SUZUKI: R.O. 13780-20H00-000



100602551

SUZUKI: R.O. 13780-03H00-000



100602561

Filtro aria cinghia | *Belt Air filter*

APRILIA - DERBI - GILERA - PIAGGIO: R.O. 842093



100602571

SYM: R.O. 17211HMA000



100602581

KYMCO: R.O. 00117199-17211LFA7E00



100602591

KYMCO: R.O. 00117245-17211LEA7E00



100602601

PIAGGIO: R.O. 614945



100602611

SUZUKI: R.O. 13781-05H00-000



100602621

PIAGGIO: R.O: 1780187208000



100602631

HONDA: R.O. 17230-MCT-000



100602641

HONDA: R.O. 17210-KSV-J02



100602651

HONDA: R.O. 17210-KRJ-900



100602661

HONDA: R.O. 17210-KWN-900



100602671

KYMCO: R.O. 17211-LGE5-E00 • 00117303



100602681

SYM: R.O. 17211H6B000



100602691

SYM: R.O. 17211HLK000



100602701

KYMCO: R.O. 00117213



100602711

Filtro aria puleggia | *Pulley air filter*
YAMAHA: R.O. 59C1540800



100602721

SUZUKI: R.O. 13780-10G00-000



100602731

SYM: R.O. 17211LEA000



100602741

YAMAHA: R.O. 5TYE445110



100602753

PIAGGIO: R.O. 113125



100602761

KYMCO: R.O. 00117409



100602771

HONDA: R.O. 17210-KZR-600



100602781

SYM: R.O. 17211HHA000



100602791

YAMAHA: R.O. 5C3E44510000



100602801

KYMCO: R.O. 00117221



100602810

PIAGGIO: R.O. 285352



100602820

PIAGGIO: R.O. B016409



100602831

KYMCO: R.O. 00117469



100602841

HONDA: R.O. 17210-KZL-930



100602851

HONDA: R.O. 17210-K01-900



100602861

YAMAHA: R.O. 52SE445100



100602871

Filtro aria carter | *Carter air filter*
YAMAHA: R.O. 52SE54080000



100602881

Filtro aria carter | *Carter air filter*
YAMAHA: R.O. 59C154070000



100602891

SYM: R.O. 17211AAA000



100602901

HONDA: R.O. 17210-MGS-D30



100602911

HONDA: R.O. 17210-KVZ-630



100602921

KYMCO: R.O. 00163096



100602931

YAMAHA: R.O. 5S9E44510000



100602961

LML



100602970

PIAGGIO: R.O. 1834235



100602981

KYMCO: R.O. 00117492



100602991

YAMAHA: R.O. 2DPE44510000



100603001

YAMAHA: R.O. 2CME44510000



100603011

PIAGGIO: R.O. 1A005015



100603021

HONDA: R.O. 17210-K04-930



100603031

PIAGGIO: R.O. B017901



100603041

PIAGGIO: R.O. B018070



100603051

PIAGGIO: R.O. 880001



100603063

PIAGGIO: R.O. 090926



100603071

HONDA: R.O. 19412-KTW-900



100603080

BMW: R.O. 13718529998
HUSQVARNA



100603090

BMW: R.O. 13711341528



100603100

HONDA: R.O. 17210-MFN-D02



100603110

HONDA: R.O. 17221-KYJ-640



100603120

HONDA: R.O. 17210-K40-F00



100603130

HONDA: R.O. 17210-KRP-980



100603140

HONDA: R.O. 17210-GFM-970



100603150

HONDA: R.O. 17211-KPC-D20



100603160

KAWASAKI: R.O. 110290011



100603170

KAWASAKI: R.O. 110130713



100603180

KAWASAKI: R.O. 110130040



100603190

KAWASAKI: R.O. 11031302



100603200

KAWASAKI: R.O. 110130026



100603210

KAWASAKI: R.O. 110130041



100603220

KAWASAKI: R.O. 110130016



100603230

KAWASAKI: R.O. 110130036



100603240

KYMCO: R.O. 00162989



100603250

PIAGGIO: R.O. 1A005072



100603260

SUZUKI: R.O. 13780-06G00-000



100603270

SUZUKI: R.O. 13780-40JA0-000



100603280

SUZUKI: R.O. 13780-27G10-000



100603290

SUZUKI: R.O. 13780-44H00-000



100603300

SUZUKI: R.O. 13780-18H00-000



100603310

SUZUKI: R.O. 13780-44G00-000



100603320

SUZUKI: R.O. 13780-47H00-000



100603330

SUZUKI: R.O. 13780-29G00-000



100603340

SUZUKI: R.O. 13780-01H00-000



100603350

SUZUKI: R.O. 13780-14J00-000



100603360

SYM: R.O. 17211L4A000



100603370

SYM: R.O. 17211VS1000



100603380

YAMAHA: R.O. 4TR144510000



100603390

YAMAHA: R.O. 2D1144510000



100603400

YAMAHA: R.O. 5VX144510000



100603410

YAMAHA: R.O. 5VKE44510000



100603420

YAMAHA: R.O. 1WS144500000



100603430

YAMAHA: R.O. 5PW144510000



100603440

YAMAHA: R.O. 5VY144510000



100603450

YAMAHA: R.O. 4C8144510000



100603460

YAMAHA: R.O. 14B144510000



100603470

YAMAHA: R.O. 2C0144500100



100603480

YAMAHA: R.O. 13S144500000



100603490

YAMAHA: R.O. 13S1445002000



100603500

YAMAHA: R.O. 5EB144510000 - 5SL14450000



100603510

YAMAHA: R.O. 1VJ144510000



100603520

YAMAHA: R.O. 2RW144510000



100603530

YAMAHA: R.O. 20S144510000



100603550

YAMAHA: R.O. 5VLE44501200



100603560

YAMAHA: R.O. 2GV144510000



100603580

HONDA: R.O. 17210-MCA-A60



100603590

YAMAHA: R.O. 1RC144510000



100603600

SUZUKI: R.O. 13780-32E00-000



100603610

YAMAHA: R.O. 11DE44510000



100603620

YAMAHA: R.O. 1WDE44510000

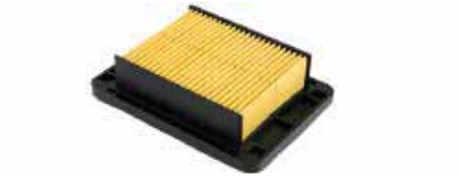

100603630

SUZUKI: R.O. 13780-04F00-000



100603640

YAMAHA: R.O. 3TB144510200



100603650 NEW

KYMCO: R.O. 00117682



100603660 NEW

KYMCO: R.O. 00117743



100603670 NEW

KYMCO: R.O. 00117621



100603680 NEW

YAMAHA: R.O. B74WE4450000



100603690 NEW

HONDA: R.O. 17210-MKH-D00



100603700 NEW

YAMAHA: R.O. BC3154070000



100603710 NEW

PIAGGIO: R.O. 1A007327



100603720 NEW

YAMAHA: R.O. BC3144510000



100603730 NEW

YAMAHA: R.O. B74E54070000



100603740 NEW

HONDA: R.O. 17210-K77-V00



FILTRI ARIA

AIR FILTERS

100603751 NEW

PIAGGIO: R.O. 495113
HONDA: R.O. 17214-KS4-000



100604980

UFI

PIAGGIO: R.O. 1780187Z08000

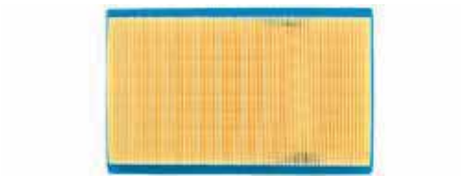

100604990

UFI

PIAGGIO: R.O. 263703



100609341

KYMCO: R.O. 00163996



FILTRI ARIA QUAD - *QUAD AIR FILTERS*

100601241

KAWASAKI 750: Jet Force



100601251

HONDA 450: Trx



100601271

YAMAHA 700: Raptor



100601281

YAMAHA 450: Wolverine 4x4 06



100602031

YAMAHA 660: Raptor



100602041

YAMAHA 350: Warrior - Raptor
660: Grizzly



100602051

KAWASAKI 400: Kfx
SUZUKI 400



100602071

Pannello filtro aria quad | *Quad air filter panel*
Applicazioni standard mm 330 x 330 x 11



100602081

Applicazioni standard mm 330 x 330 x 15



100602121

KYMCO 125-150: Maxer 02-03



100602131

KYMCO 250: Kxr 03



100602141

KAWASAKI 650-700: Prairie - 4x4 Hdw Kfx



100602151

POLARIS 330-500: Trial Boss - Predator
500-700: Scrambler 4x2-4x4 - Sportman 4x4 - 4x4



100602161

YAMAHA 200: Blaster



100602171

YAMAHA 350: Yzf Banshee 2T



FILTRI ARIA RACING - *RACING AIR FILTERS*

100601000

Ø 32
Per carburatore PHBG | *For carburetor PHBG*




100601010

Ø 35
Per carburatore PHVA-PHBN-PHBD-PHBE | *For carburetor PHVA-PHBN-PHBD-PHBE*




100601020

Ø 38
Per carburatore PHBL | *For carburetor PHBL*




100601030

Ø 35
Per carburatore PHBG-PHVA-PHBN-PHBD-PHBE | *For carburetor PHBG-PHVA-PHBN-PHBD-PHBE*




100601040

Ø 38
Per carburatore PHBL | *For carburetor PHBL*




100601050

Ø 32
Per carburatore PHBG | *For carburetor PHBG*




100601060

Ø 35
Per carburatore PHBL | *For carburetor PHBL*




100601070

Ø 35




100601120

Ø 35




100601080

Ø 32
Con cuffia protezione in plastica anti acqua-fango-polvere | *Dust water mud protection cover*




100601090

Ø 35
Con cuffia protezione in plastica anti acqua-fango-polvere | *Dust water mud protection cover*


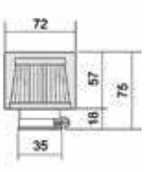

100601100

Ø 38
Con cuffia protezione in plastica anti acqua-fango-polvere | *Dust water mud protection cover*




100601110

Ø 35
Con cuffia protezione in plastica anti acqua-fango-polvere |
Dust water mud protection cover







Modello *Model*	**CC**	**Da** *From*	**A** *To*	**Telaio** *Frame*	**OEM**	**Codice RMS** *RMS Code*	**Note** *Notes*
APRILIA							
Amico	50	1994	1994	HR	AP8206514	**100520010**	
Amico	50	1994	1994	HR	AP8206514	**100520011**	
Amico	50	1996	1998	HU010	AP8206514	**100520010**	
Amico	50	1996	1998	HU010	AP8206514	**100520011**	
Amico Gl-Gle	50	1993	1995	HU	AP8206514	**100520010**	
Amico Gl-Gle	50	1993	1995	HU	AP8206514	**100520011**	
Amico Lx- Sport-Cat	50	1992	1993	GC	AP8206514	**100520010**	
Amico Lx- Sport-Cat	50	1992	1993	GC	AP8206514	**100520011**	
Area 51	50	1998	2000	MY	AP8206466	**100520020**	
Area 51	50	1998	2000	MY	AP8206466	**100520021**	
Gulliver	50	1995	1998	LH000	AP8206466	**100520020**	
Gulliver	50	1995	1998	LH000	AP8206466	**100520021**	
Gulliver Lc	50	1996	1998	LH040	AP8206466	**100520020**	
Gulliver Lc	50	1996	1998	LH040	AP8206466	**100520021**	
Rally	50	1995	2003	MD000\MDH00	AP8206466	**100520020**	
Rally	50	1995	2003	MD000\MDH00	AP8206466	**100520021**	
Rally Liquid Cooled	50	1996	1999	MDA00\MAD10	AP8206466	**100520020**	
Rally Liquid Cooled	50	1996	1999	MDA00\MAD10	AP8206466	**100520021**	
Scarabeo	50	1993	1997	HS\LE	AP8206466	**100520020**	
Scarabeo	50	1993	1997	HS\LE	AP8206466	**100520021**	
Scarabeo	50	1998	1998	PF000\PF0100	AP8206466	**100520020**	
Scarabeo	50	1998	1998	PF000\PF0100	AP8206466	**100520021**	
Scarabeo	50	1999	1999	PF0\PFG	AP8206466	**100520020**	
Scarabeo	50	1999	1999	PF0\PFG	AP8206466	**100520021**	
Scarabeo	50	2000	2005	PFG00\TH000	AP8206466	**100520020**	
Scarabeo	50	2000	2005	PFG00\TH000	AP8206466	**100520021**	
Sonic	50	1998	2007	PB000\TL000	AP8206466	**100520020**	
Sonic	50	1998	2007	PB000\TL000	AP8206466	**100520021**	
Sonic Gp	50	1998	2008	PB010\TLA00	AP8206466	**100520020**	
Sonic Gp	50	1998	2008	PB010\TLA00	AP8206466	**100520021**	
Sr	50	1993	1993	GP\LB	AP8206514	**100520010**	
Sr	50	1993	1993	GP\LB	AP8206514	**100520011**	
Sr	50	1994	1996	LF	AP8206466	**100520020**	
Sr	50	1994	1996	LF	AP8206466	**100520021**	
Sr Liquid Cooled	50	1994	1996	LC	AP8206466	**100520020**	
Sr Liquid Cooled	50	1994	1996	LC	AP8206466	**100520021**	
Sr Stealth	50	1997	2000	MZ	AP8206466	**100520020**	
Sr Stealth	50	1997	2000	MZ	AP8206466	**100520021**	
Sr Www	50	1997	2001	LYH00	AP8206466	**100520020**	
Sr Www	50	1997	2001	LYH00	AP8206466	**100520021**	
DERBI							
Atlantis 2T	50	2010	2010	AL4AE2	830939	**100520100**	
Atlantis 2T Eu2	50	2007	2009		830939	**100520100**	
Atlantis O2 Bullet	50	2003	2005	AL1AE2	830939	**100520100**	
Atlantis O2 City	50	2003	2006	AL1AE2	830939	**100520100**	
Atlantis O2 Red Bullet	50	2003	2003	AL1AE2	830939	**100520100**	
Atlantis O2 Two Chic	50	2005	2005	AL1AE2	830939	**100520100**	
Boulevard 2T	50	2009	2014	BR1A1A	830939	**100520100**	
Gp1 E2	50	2003	2003	PREDXB	830939	**100520100**	
Gp1 Euro2	50	2005	2005	PR1A1A	830939	**100520100**	
Gp1 Open Eu2	50	2006	2009	PR1B1A	830939	**100520100**	
Gp1 Race Eu2	50	2005	2007	PR1A1A	830939	**100520100**	
Sonar 2T	50	2009	2009	LR1A1A	830939	**100520100**	
Variant Sport 2T	50	2012	2012	SBA00	830939	**100520100**	
GILERA							
Dna	50	2000	2007	C2700	830939	**100520100**	
Dna Gp Experience	50	2003	2004	C2700	830939	**100520100**	
Runner	50	1997	2000	C1400	830939	**100520100**	



COLLETTORI ASPIRAZIONE

INLET PIPES

Modello *Model*	**CC**	**Da** *From*	**A** *To*	**Telaio** *Frame*	**OEM**	**Codice RMS** *RMS Code*	**Note** *Notes*
Runner Purejet	50	2002	2004	C36100	830939	**100520100**	
Runner Sp	50	2005	2012	C46100	830939	**100520100**	
Runner Sp Special Edition	50	2007	2007	C46100	830939	**100520100**	
Runner Sp St & Simoncelli	50	2008	2009	C46100	830939	**100520100**	
Stalker	50	1997	2004	C1300	830939	**100520100**	
Stalker	50	2005	2011	C40100	830939	**100520100**	
Stalker Naked	50	2008	2008	C40102	830939	**100520100**	
Stalker Special Edition	50	2007	2008	C40100	830939	**100520100**	
Storm Euro2	50	2007	2007	C29000	830939	**100520100**	
Typhoon	50	1994	1997	TEC1T	830939	**100520100**	
Typhoon X	50	1998	1999	TEC2T	830939	**100520100**	
Typhoon Xr	50	2000	2000	C1900	830939	**100520100**	
Runner Fx-Fxr 125-180	125	1997	2002	M070\080	430206	**100520030**	
Typhoon	125	1995	1998	M0200	430206	**100520030**	
Typhoon X-Xr	125	1999	2000	M0200	430206	**100520030**	
Runner Fx-Fxr 125-180	180	1997	2002	M070\080	430206	**100520030**	
KYMCO							
Agility 4T R10	50	2006	2006	U60010	00102048	**100520360**	
Agility 4T R10	50	2007	2008	U60080	00102048	**100520360**	
Agility 4T R12	50	2007	2008	U60050	00102040	**100520390**	
Agility 4T R16	50	2008	2012	C10000	00117075	**100520390**	
Agility Plus 4T	50	2014	2014	12000	00117075	**100520390**	
Agility R12	50	2005	2005	U60000	00102040	**100520390**	
Agility Rs	50	2009	2009	U600B0	00102040	**100520390**	
Filly	50	1998	2000	SD10AC	00102601	**100520390**	
Filly Lx	50	2001	2002	S21000	00102601	**100520390**	
Like 4T	50	2009	2009	D11000	00102040	**100520390**	
People S 4T	50	2006	2008	B91000	00102601	**100520390**	
Super 8	50	2007	2007	U70000	00117075	**100520390**	
Super 8 4T	50	2009	2009	U70300	00117075	**100520390**	
Super 8 4T	50	2013	2013	U71000	00117075	**100520390**	
Vitality 4T	50	2004	2004	U31000	00102601	**100520390**	
Agility 4T	125	2006	2006	U62000	00122198	**100520370**	
Agility 4T Euro3	125	2006	2008	U62001	00122116	**100520370**	
Agility Carry	125	2011	2011	U62060	00122116	**100520370**	
Agility R16	125	2008	2012	C20000	00117091	**100520370**	
Agility Rs	125	2009	2009	U62011	00122116	**100520370**	
Downtown 125I	125	2009	2016	V21000	00117198	**100520420**	
Downtown E4	125	2016	2016	V21111	00117198	**100520420**	
K-Xct I	125	2012	2014	D81000	00117198	**100520420**	
Like	125	2009	2009	D20000	00122116	**100520370**	
Like Lx	125	2012	2012	D20000	00122116	**100520370**	
Movie 125 Euro3	125	2006	2007	S50012	00122198	**100520370**	
Movie XI 125-150 Euro2	125	2003	2004	S50011\S50001	00122198	**100520370**	
People Gti	125	2010	2014	V41000	00117198	**100520420**	
Super 8	125	2008	2009	U80100	00117091	**100520370**	
X-Town Cbs	125	2016	2016	W10010	00117198	**100520420**	
Agility R16	150	2008	2009	C30000	00117091	**100520370**	
Movie 150 Euro3	150	2006	2007	S50002	00122198	**100520370**	
Movie XI 125-150 Euro2	150	2003	2004	S50011\S50001	00122198	**100520370**	
Downtown 300I	300	2009	2009	V20000	00117182	**100520400**	
Downtown Abs	300	2010	2010	V20010	00117182	**100520400**	
Downtown Abs I	300	2011	2016	V20030	00117345	**100520430**	
Downtown I	300	2011	2011	V20020	00117345	**100520430**	
K-Xct I	300	2012	2012	D80000	00117345	**100520430**	
K-Xct I Abs	300	2014	2014	D8000100	00117345	**100520430**	
People Gti	300	2010	2010	V40000	00117182	**100520400**	
People Gti	300	2011	2011	V40020	00117345	**100520430**	



Modello *Model*	**CC**	**Da** *From*	**A** *To*	**Telaio** *Frame*	**OEM**	**Codice RMS** *RMS Code*	**Note** *Notes*
People Gti	300	2014	2014	V40020	00117345	**100520430**	
People Gti Abs	300	2012	2012	V40010	00117345	**100520430**	
People Gti Abs	300	2014	2014	V40010	00117345	**100520430**	
People Gti Abs E4	300	2016	2016	C80000	00117345	**100520430**	
Downtown Abs E4	350	2016	2016	C71000	00117345	**100520430**	
Downtown I Abs	350	2015	2015	V23010	00117345	**100520430**	
X Citing I	400	2013	2015	D60000	00117491	**100520410**	
X Citing I Abs	400	2014	2015	D60010	00117491	**100520410**	
X Citing I Abs E4	400	2016	2016	D61010	00117491	**100520410**	
MALAGUTI							
Centro Base	50	1993	1994	36	76004500	**100520020**	
Centro Base	50	1993	1994	36	76004500	**100520021**	
Centro SI	50	1994	1998	36T	76004500	**100520020**	
Centro SI	50	1994	1998	36T	76004500	**100520021**	
Centro SI Kat	50	1999	2000	4900000	76004500	**100520020**	
Centro SI Kat	50	1999	2000	4900000	76004500	**100520021**	
Ciak	50	1999	2000	5200000	76004500	**100520020**	
Ciak	50	1999	2000	5200000	76004500	**100520021**	
Ciak Master	50	2004	2004		76004500	**100520020**	
Ciak Master	50	2004	2004		76004500	**100520021**	
Ciak Master Euro 2	50	2006	2006	64000	76004500	**100520020**	
Ciak Master Euro 2	50	2006	2006	64000	76004500	**100520021**	
Ciak Mono Euro 2	50	2003	2003		76004500	**100520020**	
Ciak Mono Euro 2	50	2003	2003		76004500	**100520021**	
Ciak Mono Euro 2 2.3	50	2003	2003		76004500	**100520020**	
Ciak Mono Euro 2 2.3	50	2003	2003		76004500	**100520021**	
Ciak Td	50	2000	2001	5200000	76004500	**100520020**	
Ciak Td	50	2000	2001	5200000	76004500	**100520021**	
F10 Jet Line	50	1992	1998	35	76004500	**100520020**	
F10 Jet Line	50	1992	1998	35	76004500	**100520021**	
F10 Kat	50	1999	2000	48	76004500	**100520020**	
F10 Kat	50	1999	2000	48	76004500	**100520021**	
F10 Restyling Eu1	50	2001	2002	48	76004500	**100520020**	
F10 Restyling Eu1	50	2001	2002	48	76004500	**100520021**	
F10 Restyling Eu2-2.3	50	2003	2004	48\48000	76004500	**100520020**	
F10 Restyling Eu2-2.3	50	2003	2004	48\48000	76004500	**100520021**	
F10 Restyling Euro2	50	2002	2006	48000	76004500	**100520020**	
F10 Restyling Euro2	50	2002	2006	48000	76004500	**100520021**	
F12 Aria Restyling Euro 2	50	2006	2006	46000	76004500	**100520020**	
F12 Aria Restyling Euro 2	50	2006	2006	46000	76004500	**100520021**	
F12 Lc Restyling Euro 2	50	2006	2006	62000	76004500	**100520020**	
F12 Lc Restyling Euro 2	50	2006	2006	62000	76004500	**100520021**	
F12 Phantom	50	1994	1998	40	76004500	**100520020**	
F12 Phantom	50	1994	1998	40	76004500	**100520021**	
F12 Phantom Euro1	50	1999	2000	4600000	76004500	**100520020**	
F12 Phantom Euro1	50	1999	2000	4600000	76004500	**100520021**	
F12 Phantom Lc	50	1994	1998	41	76004500	**100520020**	
F12 Phantom Lc	50	1994	1998	41	76004500	**100520021**	
F12 Phantom Lc Euro1	50	1999	2000	4700000	76004500	**100520020**	
F12 Phantom Lc Euro1	50	1999	2000	4700000	76004500	**100520021**	
F12 Phantom Lc Restyling Eu1	50	2001	2002	4700000	76004500	**100520020**	
F12 Phantom Lc Restyling Eu1	50	2001	2002	4700000	76004500	**100520021**	
F12 Phantom Lc Restyling Eu2-2.3	50	2003	2004	6200000	76004500	**100520020**	
F12 Phantom Lc Restyling Eu2-2.3	50	2003	2004	6200000	76004500	**100520021**	
F12 Phantom Lc Twin Disks	50	1998	1998	41	76004500	**100520020**	
F12 Phantom Lc Twin Disks	50	1998	1998	41	76004500	**100520021**	
F12 Phantom Restyling Eu1	50	2001	2002	4600000	76004500	**100520020**	
F12 Phantom Restyling Eu1	50	2001	2002	4600000	76004500	**100520021**	



COLLETTORI ASPIRAZIONE

INLET PIPES

Modello *Model*	**CC**	**Da** *From*	**A** *To*	**Telaio** *Frame*	**OEM**	**Codice RMS** *RMS Code*	**Note** *Notes*
F12 Phantom Restyling Eu2	50	2002	2002	4600000	76004500	**100520020**	
F12 Phantom Restyling Eu2	50	2002	2002	4600000	76004500	**100520021**	
F12 Phantom Restyling Eu2-2.3	50	2003	2004	4600000	76004500	**100520020**	
F12 Phantom Restyling Eu2-2.3	50	2003	2004	4600000	76004500	**100520021**	
F12R Phantom Lc	50	2007	2010	8201	76004500	**100520020**	
F12R Phantom Lc	50	2007	2010	8201	76004500	**100520021**	
F15 Fire Fox	50	1996	1998	44	76004500	**100520020**	
F15 Fire Fox	50	1996	1998	44	76004500	**100520021**	
F15 Fire Fox Air Cooled	50	2005	2006	73K20173	76004500	**100520020**	
F15 Fire Fox Air Cooled	50	2005	2006	73K20173	76004500	**100520021**	
F15 Fire Fox Restyling Euro2-2.3	50	2003	2004	44	76004500	**100520020**	
F15 Fire Fox Restyling Euro2-2.3	50	2003	2004	44	76004500	**100520021**	
F15 Fire Fox Twin Disks & Special	50	1998	1999	44	76004500	**100520020**	
F15 Fire Fox Twin Disks & Special	50	1998	1999	44	76004500	**100520021**	
F15 Fire Fox Twin Disks Digit Kat	50	1998	2000	4400000	76004500	**100520020**	
F15 Fire Fox Twin Disks Digit Kat	50	1998	2000	4400000	76004500	**100520021**	
F15 Lc Restyling Euro 2	50	2004	2005	44000044	76004500	**100520020**	
F15 Lc Restyling Euro 2	50	2004	2005	44000044	76004500	**100520021**	
F15 Lc-Tds Restyling Euro 1	50	2001	2001	4400000	76004500	**100520020**	
F15 Lc-Tds Restyling Euro 1	50	2001	2001	4400000	76004500	**100520021**	
Grizzly 4 Wheels	50	2004	2009	RFRSM5061	76004500	**100520020**	
Grizzly 4 Wheels	50	2004	2009	RFRSM5061	76004500	**100520021**	
Yesterday - Yesterday Euro	50	1997	2000	45	76004500	**100520020**	
Yesterday - Yesterday Euro	50	1997	2000	45	76004500	**100520021**	
Ciak Master	150	2004	2004		76004500	**100520020**	
Ciak Master	150	2004	2004		76004500	**100520021**	
MBK							
Cs Mach G Euro1	50	2002	2003	5RW	4CUE35550000	**100520020**	
Cs Mach G Euro1	50	2002	2003	5RW	4CUE35550000	**100520021**	
Cs Mach G Euro2	50	2002	2004	5RW	4CUE35550000	**100520020**	
Cs Mach G Euro2	50	2002	2004	5RW	4CUE35550000	**100520021**	
Cw Booster	50	1990	1991	3WW	3VLE35550000	**100520010**	
Cw Booster	50	1990	1991	3WW	3VLE35550000	**100520011**	
Cw Booster	50	2001	2002	5NT	3VLE35550000	**100520010**	
Cw Booster	50	2001	2002	5NT	3VLE35550000	**100520011**	
Cw Booster	50	2004	2004	5WW2	3VLE35550000	**100520010**	
Cw Booster	50	2004	2004	5WW2	3VLE35550000	**100520011**	
Cw Booster (Ita)	50	1992	1994	3WW	3VLE35550000	**100520010**	
Cw Booster (Ita)	50	1992	1994	3WW	3VLE35550000	**100520011**	
Cw Booster Naked	50	2003	2003	1D12	3VLE35550000	**100520010**	
Cw Booster Naked	50	2003	2003	1D12	3VLE35550000	**100520011**	
Cw Booster Spirit	50	1996	1998	4VU	3VLE35550000	**100520010**	
Cw Booster Spirit	50	1996	1998	4VU	3VLE35550000	**100520011**	
Cw Booster Spirit (Ita)	50	1999	1999	4VU9	3VLE35550000	**100520010**	
Cw Booster Spirit (Ita)	50	1999	1999	4VU9	3VLE35550000	**100520011**	
Cw Booster Spirit (Ita)	50	2000	2000	5LE\5MM	3VLE35552000	**100520010**	
Cw Booster Spirit (Ita)	50	2000	2000	5LE\5MM	3VLE35552000	**100520011**	
Cw Booster Spirit Euro2	50	2002	2002	5RH2	3VLE35550000	**100520010**	
Cw Booster Spirit Euro2	50	2002	2002	5RH2	3VLE35550000	**100520011**	
Cw Booster Spirit Euro2	50	2003	2003	5XW\5XX	3VLE35550000	**100520010**	
Cw Booster Spirit Euro2	50	2003	2003	5XW\5XX	3VLE35550000	**100520011**	
Cw L Booster	50	2001	2003	5SX	3VLE35552000	**100520010**	
Cw L Booster	50	2001	2003	5SX	3VLE35552000	**100520011**	
Cw L Booster Spirit	50	2003	2003	5XY2\5YA2	3VLE35550000	**100520010**	
Cw L Booster Spirit	50	2003	2003	5XY2\5YA2	3VLE35550000	**100520011**	
Cw R Booster Road (Ita)	50	1994	1995	4PA1	3VLE35550000	**100520010**	
Cw R Booster Road (Ita)	50	1994	1995	4PA1	3VLE35550000	**100520011**	
Cw Rs Booster Ng	50	2001	2002	5NU	3VLE35552000	**100520010**	



Modello *Model*	**CC**	**Da** *From*	**A** *To*	**Telaio** *Frame*	**OEM**	**Codice RMS** *RMS Code*	**Note** *Notes*
Cw Rs Booster Ng	50	2001	2002	5NU	3VLE35552000	**100520011**	
Cw Rs Booster Ng	50	2003	2003	1B02	3VLE35550000	**100520010**	
Cw Rs Booster Ng	50	2003	2003	1B02	3VLE35550000	**100520011**	
Cw Rs Booster Ng (Ita)	50	1995	1998	4SB	3VLE35550000	**100520010**	
Cw Rs Booster Ng (Ita)	50	1995	1998	4SB	3VLE35550000	**100520011**	
Cw Rs Booster Ng (Ita)	50	1999	1999	5FX2	3VLE35550000	**100520010**	
Cw Rs Booster Ng (Ita)	50	1999	1999	5FX2	3VLE35550000	**100520011**	
Cw Rs Booster Ng Euro1	50	1999	2000	5LF	3VLE35552000	**100520010**	
Cw Rs Booster Ng Euro1	50	1999	2000	5LF	3VLE35552000	**100520011**	
Cw Rsp Booster Rocket (Ita)	50	1997	1998	4UP	3VLE35552000	**100520010**	
Cw Rsp Booster Rocket (Ita)	50	1997	1998	4UP	3VLE35552000	**100520011**	
Cw Rsx Booster Track (Ita)	50	1996	1998	4YB	3VLE35550000	**100520010**	
Cw Rsx Booster Track (Ita)	50	1996	1998	4YB	3VLE35550000	**100520011**	
Cw Sp Booster Spirit Euro2	50	2002	2002	5RY2	3VLE35552000	**100520010**	
Cw Sp Booster Spirit Euro2	50	2002	2002	5RY2	3VLE35552000	**100520011**	
Ew Stunt	50	2000	2002	5LH	3VLE35550000	**100520010**	
Ew Stunt	50	2000	2002	5LH	3VLE35550000	**100520011**	
Yh Flipper	50	1998	1998	5EU	4CUE35550000	**100520020**	
Yh Flipper	50	1998	1998	5EU	4CUE35550000	**100520021**	
Yh Flipper	50	2001	2002	5PF	4CUE35550000	**100520020**	
Yh Flipper	50	2001	2002	5PF	4CUE35550000	**100520021**	
Ym Fizz (Ita)	50	1994	1995	4KH	4CUE35550000	**100520020**	
Ym Fizz (Ita)	50	1994	1995	4KH	4CUE35550000	**100520021**	
Yn R Ovetto Euro2	50	2002	2003	5RN	4CUE35550000	**100520020**	
Yn R Ovetto Euro2	50	2002	2003	5RN	4CUE35550000	**100520021**	
Yq L Nitro Jaguar	50	2004	2004	5SB9	4CUE35550000	**100520020**	
Yq L Nitro Jaguar	50	2004	2004	5SB9	4CUE35550000	**100520021**	
Yq Nitro	50	2001	2002	5PE	4CUE35550000	**100520020**	
Yq Nitro	50	2001	2002	5PE	4CUE35550000	**100520021**	
Yq Nitro (Ita)	50	1997	1998	5BR	4CUE35550000	**100520020**	
Yq Nitro (Ita)	50	1997	1998	5BR	4CUE35550000	**100520021**	
Yq Nitro (Ita)	50	1999	2000	5LC	4CUE35550000	**100520020**	
Yq Nitro (Ita)	50	1999	2000	5LC	4CUE35550000	**100520021**	
Yq Nitro Euro2	50	2003	2003	5SB	4CUE35550000	**100520020**	
Yq Nitro Euro2	50	2003	2003	5SB	4CUE35550000	**100520021**	
Yp E Skyliner	125	2003	2003	5XL2	5XME35850000	**100520550**	
Yp E Skyliner	180	2003	2003	5XM2	5XME35850000	**100520550**	
PEUGEOT							
Jet Force 50 C-Tech	50	2005	2006	VGA A1AAAA	-	**100520260**	
Jet Force 50 C-Tech	50	2005	2006	VGA A1AAAA	-	**100520261**	
Jet Force 50 C-Tech	50	2007	2011	VGA A1AABA	-	**100520260**	
Jet Force 50 C-Tech	50	2007	2011	VGA A1AABA	-	**100520261**	
Jet Force 50 C-Tech Rally Victories	50	2006	2007	VGA A1AAAA	-	**100520260**	
Jet Force 50 C-Tech Rally Victories	50	2006	2007	VGA A1AAAA	-	**100520261**	
Jet Force 50 C-Tech Rcup	50	2007	2009	VGA A1AABA	-	**100520260**	
Jet Force 50 C-Tech Rcup	50	2007	2009	VGA A1AABA	-	**100520261**	
Jet Force 50 Darkside	50	2008	2015	VGA A1AABA	-	**100520260**	
Jet Force 50 Darkside	50	2008	2015	VGA A1AABA	-	**100520261**	
Jet Force 50 Ice Blade	50	2010	2012	VGA A1AABA	-	**100520260**	
Jet Force 50 Ice Blade	50	2010	2012	VGA A1AABA	-	**100520261**	
Ludix 50 Classic 1 Seater	50	2004	2007	VGA L1AABM/EM	-	**100520260**	
Ludix 50 Classic 1 Seater	50	2004	2007	VGA L1AABM/EM	-	**100520261**	
Ludix 50 Classic 2 Seater	50	2006	2007	VGA L1AAEA	-	**100520260**	
Ludix 50 Classic 2 Seater	50	2006	2007	VGA L1AAEA	-	**100520261**	
Ludix 50 Elegance	50	2004	2007	VGA L1AABA/EA	-	**100520260**	
Ludix 50 Elegance	50	2004	2007	VGA L1AABA/EA	-	**100520261**	
Ludix 50 Ep	50	2008	2012	-	-	**100520260**	
Ludix 50 Ep	50	2008	2012	-	-	**100520261**	



COLLETTORI ASPIRAZIONE

INLET PIPES

Modello *Model*	**CC**	**Da** *From*	**A** *To*	**Telaio** *Frame*	**OEM**	**Codice RMS** *RMS Code*	**Note** *Notes*
Ludix 50 Ii Dt One Luxe 2 Sitzer	50	2008	2011	VGA L1AADA	-	**100520260**	
Ludix 50 Ii Dt One Luxe 2 Sitzer	50	2008	2011	VGA L1AADA	-	**100520261**	
Ludix 50 Ii Elegance	50	2008	2011	VGA L1AAEA	-	**100520260**	
Ludix 50 Ii Elegance	50	2008	2011	VGA L1AAEA	-	**100520261**	
Ludix 50 Ii Lc Blaster Ice Blade	50	2010	2011	VGA L1ACFA	-	**100520260**	
Ludix 50 Ii Lc Blaster Ice Blade	50	2010	2011	VGA L1ACFA	-	**100520261**	
Ludix 50 Ii Lc Blaster Rcup	50	2008	2009	VGA L1ACFA	-	**100520260**	
Ludix 50 Ii Lc Blaster Rcup	50	2008	2009	VGA L1ACFA	-	**100520261**	
Ludix 50 Ii Lc Blaster Rs12	50	2008	2011	VGA L1ACFA	-	**100520260**	
Ludix 50 Ii Lc Blaster Rs12	50	2008	2011	VGA L1ACFA	-	**100520261**	
Ludix 50 Ii Snake Furious	50	2008	2011	VGA L1AAFA	-	**100520260**	
Ludix 50 Ii Snake Furious	50	2008	2011	VGA L1AAFA	-	**100520261**	
Ludix 50 Ii Snake Naked 10 Inch	50	2008	2011	-	-	**100520260**	
Ludix 50 Ii Snake Naked 10 Inch	50	2008	2011	-	-	**100520261**	
Ludix 50 Ii Trend 12 Inch	50	2008	2011	VGA L1AAFA	-	**100520260**	
Ludix 50 Ii Trend 12 Inch	50	2008	2011	VGA L1AAFA	-	**100520261**	
Ludix 50 Ii Tt One 1 Sitzer	50	2008	2011	VGA L1AADM	-	**100520260**	
Ludix 50 Ii Tt One 1 Sitzer	50	2008	2011	VGA L1AADM	-	**100520261**	
Ludix 50 Ii Tt One 2 Sitzer	50	2008	2012	VGA L1AADA	-	**100520260**	
Ludix 50 Ii Tt One 2 Sitzer	50	2008	2012	VGA L1AADA	-	**100520261**	
Ludix 50 Lc Blaster 10 Zoll	50	2005	2007	VGA L1ACCA	-	**100520260**	
Ludix 50 Lc Blaster 10 Zoll	50	2005	2007	VGA L1ACCA	-	**100520261**	
Ludix 50 Lc Rs Blaster 12 Zoll	50	2007	2007	-	-	**100520260**	
Ludix 50 Lc Rs Blaster 12 Zoll	50	2007	2007	-	-	**100520261**	
Ludix 50 One 1 Sitzer	50	2004	2007	VGA L1AAAM/DM	-	**100520260**	
Ludix 50 One 1 Sitzer	50	2004	2007	VGA L1AAAM/DM	-	**100520261**	
Ludix 50 One 2 Sitzer	50	2006	2007	VGA L1AADA	-	**100520260**	
Ludix 50 One 2 Sitzer	50	2006	2007	VGA L1AADA	-	**100520261**	
Ludix 50 Pro 2T	50	2008	2011	-	-	**100520260**	
Ludix 50 Pro 2T	50	2008	2011	-	-	**100520261**	
Ludix 50 Snake	50	2004	2007	VGA L1AAACA/FA	-	**100520260**	
Ludix 50 Snake	50	2004	2007	VGA L1AAACA/FA	-	**100520261**	
Ludix 50 Trend 10 Inch	50	2004	2007	VGA L1AAAAA	-	**100520260**	
Ludix 50 Trend 10 Inch	50	2004	2007	VGA L1AAAAA	-	**100520261**	
PIAGGIO							
Ape	50	2009	2017	C8000	286889	**100520220**	
Ape Fl - Fl2	50	1989	1995	TL6T	286889	**100520220**	
Ape Fl3 Europa	50	1996	1999	TL5T	286889	**100520220**	
Ape Mix 2T	50	1998	2008	C8000	286889	**100520220**	
Ape P	50	1980	1985	TL3T	286889	**100520220**	
Ape Rst Mix	50	1999	2003	C8000	286889	**100520220**	
Ape Tm P	50	1985	1989	TL4T	286889	**100520220**	
Diesis	50	2001	2001	C3400	830939	**100520100**	
Fly 2T	50	2005	2007	C44100	830939	**100520100**	
Fly 2T	50	2010	2011	C44700	830939	**100520100**	
Fly 4T	50	2005	2007	C44200	845946	**100520480**	
Fly 4T & 25-30 Km/H	50	2008	2011	C44500	845946	**100520480**	
Fly 4T 2V	50	2013	2015	RP8C523	845946	**100520480**	
Fly 4T 2V 25-30Km-H	50	2012	2017	RP8C522	845946	**100520480**	
Fly 4T Motore Chn	50	2006	2007	C44500	845946	**100520480**	
Free	50	1992	1994	FCS1T	830939	**100520100**	
Free Delivery	50	2000	2001	FCS2T	830939	**100520100**	
Free Fl	50	1995	2002	FCS2T	830939	**100520100**	
Liberty	50	1997	2005	C1500	830939	**100520100**	
Liberty 2T	50	2006	2006	C42100	830939	**100520100**	
Liberty 2T	50	2007	2008	C42500	830939	**100520100**	
Liberty 2T Rst	50	2004	2004	C42100	830939	**100520100**	
Liberty 2T Sport	50	2006	2006	C42106	830939	**100520100**	



Modello *Model*	**CC**	**Da** *From*	**A** *To*	**Telaio** *Frame*	**OEM**	**Codice RMS** *RMS Code*	**Note** *Notes*
Liberty 2T Sport	50	2007	2008	C42501	830939	**100520100**	
Liberty 4T	50	2000	2002	C2800	969405	**100520490**	
Liberty 4T	50	2005	2008	C42400	845946	**100520480**	
Liberty 4T Delivery - Single	50	2010	2014	C42401	845946	**100520480**	
Liberty 4T Delivery Tnt	50	2009	2009	C42401	845946	**100520480**	
Liberty 4T Ptt - Double - Nexive	50	2009	2017	C42402\C42404	845946	**100520480**	
Liberty 4T Ptt (Deu)	50	2007	2012	C42406	845946	**100520480**	
Liberty 4T Rst	50	2004	2004	C42200	969405	**100520490**	
Liberty 4T Sport	50	2006	2008	C42405	845946	**100520480**	
Liberty Moc 2T & Elle	50	2009	2013	C49100	830939	**100520100**	
Liberty Moc 4T & Elle	50	2009	2016	C49200	845946	**100520480**	
Liberty Ptt Eu2	50	2004	2005	C37401	830939	**100520100**	
Nrg	50	1994	1996	SAL1T	830939	**100520100**	
Nrg Extreme	50	1999	2000		830939	**100520100**	
Nrg Mc3	50	2001	2004	C320\210	830939	**100520100**	
Nrg Power Dd	50	2005	2015	C45100	830939	**100520100**	
Nrg Power Dd Serie Speciale	50	2007	2012	C45100	830939	**100520100**	
Nrg Power Dt	50	2006	2015	C45300	830939	**100520100**	
Nrg Power Dt Serie Speciale	50	2007	2008	C45300	830939	**100520100**	
Nrg Rst Mc2	50	1996	1998	C04000	830939	**100520100**	
Ntt	50	1995	1996	SAL1T	436095	**100520100**	
Sfera	50	1991	1993	NSL1T	830939	**100520100**	
Sfera Maquillage 2	50	1994	1994	SM51T	830939	**100520100**	
Sfera Rst	50	1995	1997	C0100	830939	**100520100**	
Typhoon	50	2001	2008	C29000	830939	**100520100**	
Typhoon	50	2009	2011	C48100	830939	**100520100**	
Typhoon 2T Euro2	50	2010	2016	LBMC501	830939	**100520100**	
Typhoon 2T Euro3 Ch	50	2011	2011	LBMC5	830939	**100520100**	
Vespa 50-125	50	1967	1982		4161114	**100520150**	
Vespa Et2	50	1997	2005	C1600\38100	830939	**100520100**	
Vespa Et4	50	2000	2005	C26100	969405	**100520490**	
Vespa Fl	50	1990	1990	V5N1T	4308315	**100520170**	
Vespa Fl2 Hp	50	1991	1997	V5N2T	4308315	**100520170**	
Vespa Lx 2T	50	2005	2013	C38101	830939	**100520100**	
Vespa Lx 2T Touring & 30Km	50	2010	2013	C38101	830939	**100520100**	
Vespa Lx 4T	50	2005	2009	C38300	845946	**100520480**	
Vespa Lxv 2T	50	2006	2009	C38102	830939	**100520100**	
Vespa Lxv 2T Navy	50	2008	2008	C38102	830939	**100520100**	
Vespa N	50	1989	1990	V5X5T	4308315	**100520170**	
Vespa Pk Xl	50	1985	1988	V5X3T	4308315	**100520170**	
Vespa Pk Xl Rush	50	1988	1989	V5X4T	4308315	**100520170**	
Vespa Primavera 2T	50	2013	2017	C53200	830939	**100520100**	
Vespa Primavera 4T 2V 25 Km/H	50	2014	2017	C53300	845946	**100520480**	
Vespa S 2T & College	50	2007	2012	C38103	830939	**100520100**	
Vespa Sprint 2T 2V	50	2014	2016	C53201	830939	**100520100**	
Zip	50	1992	1993	SSL1T	830939	**100520100**	
Zip	50	1995	1996	SSP2T	436095	**100520100**	
Zip	50	2000	2004	C25000	830939	**100520100**	
Zip 2T	50	2008	2013	C25E0	830939	**100520100**	
Zip 4T	50	2000	2005	C25000	969405	**100520490**	
Zip 4T	50	2006	2013	LBMC25C	845946	**100520480**	
Zip 4T 25Km-H	50	2006	2016		845946	**100520480**	
Zip Fast Raider	50	1993	1994	SSP1T	436095	**100520100**	
Zip Fast Raider Rst	50	1996	1997	C0700	436095	**100520100**	
Zip Rst	50	1996	1999	C0600	830939	**100520100**	
Zip Sp	50	1996	2000	C1100	830939	**100520100**	
Zip Sp	50	2001	2004	C250004	830939	**100520100**	
Zip Sp Euro2	50	2006	2013	C25000	830939	**100520100**	



COLLETTORI ASPIRAZIONE

INLET PIPES

Modello *Model*	**CC**	**Da** *From*	**A** *To*	**Telaio** *Frame*	**OEM**	**Codice RMS** *RMS Code*	**Note** *Notes*
Skr City	80	1999	1999	SP81T	436095	**100520100**	
Vespa 90	90	1978	1983	V9B1	078542	**100520160**	
Beverly	125	2001	2003	M2810\M2820	484748	**100520470**	
Beverly Rst	125	2004	2005	M28400	840949	**100520450**	
Beverly Rst	125	2005	2007	M28400	B016579	**100520450**	
Fly Euro3	125	2007	2007	M57100	849465	**100520440**	
Fly Euro3	125	2008	2011	M57200	849465	**100520440**	
Hexagon	125	1994	1997	EXS1T\EXV1T	430206	**100520030**	
Hexagon Gtx	125	2000	2000	M2000000\M2000001	484748	**100520470**	
Hexagon Lx-Lxt	125	1998	1999	M0500\M0600	430206	**100520030**	
Liberty	125	1998	2000	M1100	480799	**100520040**	
Liberty	125	1998	2000	M1100	480799	**100520041**	
Liberty	125	2001	2002	M2200	485587	**100520050**	
Liberty	125	2001	2002	M2200	485587	**100520051**	
Liberty 4T	125	2006	2007	M38100	849465	**100520440**	
Liberty 4T 2V Euro3	125	2009	2012	M67100	849465	**100520440**	
Liberty 4T Euro3 Delivery - Single	125	2007	2015	M38602	849465	**100520440**	
Liberty 4T Euro3 Delivery - Tnt - Nexive	125	2008	2015	P38602	849465	**100520440**	
Liberty Rst Ptt	125	2005	2011	M38103	849465	**100520440**	
Liberty Sport	125	2006	2006	M38104	849465	**100520440**	
Sfera	125	1995	1997	M0100	480799	**100520040**	
Sfera	125	1995	1997	M0100	480799	**100520041**	
Skipper	125	1994	1997	CSM1T\CVM1T	430206	**100520030**	
Skipper 4T	125	2000	2002	M2100	485587	**100520050**	
Skipper 4T	125	2000	2002	M2100	485587	**100520051**	
Skipper Lx	125	1998	1999	M120\130	430206	**100520030**	
Super Hexagon Gtx 12	125	2001	2002	M2000002\M2000003	484748	**100520470**	
Typhoon 4T 2V Euro3	125	2010	2011	C5010	849465	**100520440**	
Vespa 125 FI	125	1989	1989	VMX7	224755	**100520200**	
Vespa Et3 125	125	1976	1983	VMB1T	1128695	**100520130**	
Vespa Et4	125	1996	1998	M0400	480799	**100520040**	
Vespa Et4	125	1996	1998	M0400	480799	**100520041**	
Vespa Et4	125	1999	2002	M1900	485587	**100520050**	
Vespa Et4	125	1999	2002	M1900	485587	**100520051**	
Vespa Granturismo	125	2003	2005	M311\312	484748	**100520470**	
Vespa Granturismo	125	2006	2007	M31101	840949	**100520450**	
Vespa Granturismo Euro 3	125	2006	2007	M31300	B016579	**100520450**	
Vespa Gtv	125	2006	2008	M31301	B016579	**100520450**	
Vespa Lx	125	2005	2006	M44100	849465	**100520440**	
Vespa Lx 4T FI	125	2009	2009	M44100	849465	**100520440**	
Vespa Lx Euro 3	125	2006	2008	M44300	849465	**100520440**	
Vespa Lxv 4T Euro3	125	2006	2009	M44301	849465	**100520440**	
Vespa Pk 125 Xl	125	1986	1986	VMX6T	224755	**100520200**	
Vespa Pk 125 Xl Elestart	125	1986	1986	VMX6T	224755	**100520200**	
Vespa Primavera 125	125	1967	1983	VMA2T	1128695	**100520130**	
X8	125	2004	2004	PM36200\PM36300	840949	**100520450**	
X8	125	2005	2006	M36301	840949	**100520450**	
X8 Premium Euro 2	125	2006	2006	M36301	840949	**100520450**	
X8 Street Euro 2	125	2006	2007	M49100	849465	**100520440**	
X9	125	2001	2002	M2300001	484748	**100520470**	
X9 Evolution	125	2003	2003	M2300035	484748	**100520470**	
X9 Evolution	125	2005	2006	M23000	840949	**100520450**	
Zip	125	2000	2002	M2500	485587	**100520050**	
Zip	125	2000	2002	M2500	485587	**100520051**	
Fly Euro3	150	2008	2011	M57100	849465	**100520440**	
Liberty Moc 4T Euro3	150	2009	2013	M67200	849465	**100520440**	
Vespa Lx	150	2005	2006	M44200	849465	**100520440**	
Vespa Lx 4T FI	150	2009	2009	M44400	849465	**100520440**	



Modello *Model*	**CC**	**Da** *From*	**A** *To*	**Telaio** *Frame*	**OEM**	**Codice RMS** *RMS Code*	**Note** *Notes*
Vespa Lx Euro 3	150	2006	2008	M44400	849465	**100520440**	
X8 Street Euro 2	150	2006	2008	M49200	849465	**100520440**	
X9 Amalfi	180	2000	2003	M2300002	484748	**100520470**	
Vespa Granturismo	200	2006	2007	M31200	840949	**100520450**	
X8	200	2005	2007	M36200	840949	**100520450**	
X9	200	2002	2003	M2300003	484748	**100520470**	
X9 Evolution	200	2003	2003	M2300003	484748	**100520470**	
Ape Car P2-P3	220	1978	1985	AF3T	566859	**100520240**	
Ape Car P2-P3	220	1978	1985	AF3T	566859	**100520243**	
Ape Car P2-P3	220	1978	1985	AF3T	566859	**100520244**	
Ape Mp P501-P601	220	1978	1996	MPR2-M2-V2	566859	**100520240**	
Ape Mp P501-P601	220	1978	1996	MPR2-M2-V2	566859	**100520243**	
Ape Mp P501-P601	220	1978	1996	MPR2-M2-V2	566859	**100520244**	
Ape Tm	220	2009	2016	T10000	566859	**100520240**	
Ape Tm	220	2009	2016	T10000	566859	**100520243**	
Ape Tm	220	2009	2016	T10000	566859	**100520244**	
Ape Tm P602	220	1982	1983	ATM1T	566859	**100520240**	
Ape Tm P602	220	1982	1983	ATM1T	566859	**100520243**	
Ape Tm P602	220	1982	1983	ATM1T	566859	**100520244**	
Ape Tm P703 FI2	220	1999	2007	ATM2T\3T	566859	**100520240**	
Ape Tm P703 FI2	220	1999	2007	ATM2T\3T	566859	**100520243**	
Ape Tm P703 FI2	220	1999	2007	ATM2T\3T	566859	**100520244**	
Ape Tm P703-P703V	220	1984	2005	ATM2T\T	566859	**100520240**	
Ape Tm P703-P703V, FI2	220	1984	2005	ATM2T\T	566859	**100520243**	
Ape Tm P703-P703V, FI2	220	1984	2005	ATM2T\T	566859	**100520244**	
Ape	250	-	-	-	127183	**100520230**	
Beverly	250	2005	2007	M28500	840949	**100520450**	
Beverly Rst	250	2004	2005	M28500	840949	**100520450**	
X9 Evolution	250	2004	2004	M23000000	840949	**100520450**	
X9 Evolution	250	2006	2006	M23000	840949	**100520450**	
SYM							
Symphony	125	2009	2009	AY12W-T	1711AARA000	**100520560**	
Symphony S	125	2009	2009	AY12W1-T	1711AARA000	**100520560**	
Symphony S	125	2010	2010	AY12W4-T	1711AARA000	**100520560**	
Symphony S	125	2012	2012	AY12W7-T	1711AARA000	**100520560**	
Symphony S	125	2013	2014	AY12W7-T	1711AARA000	**100520560**	
Symphony Sr	125	2010	2010	AZ12W1-T	1711AARA000	**100520560**	
Symphony Sr	125	2012	2014	AZ12W3-T	1711AARA000	**100520560**	
Symphony S	150	2009	2009	AY15W1-T	1711AARA000	**100520560**	
Symphony S	150	2010	2010	AY15W3-T	1711AARA000	**100520560**	
Symphony S	150	2012	2012	AY15W6-T	1711AARA000	**100520560**	
Symphony S	150	2013	2014	AY15W6-T	1711AARA000	**100520560**	
Symphony Sr	150	2010	2010	AZ15W1-T	1711AARA000	**100520560**	
Symphony Sr	150	2012	2014	AZ15W6-T	1711AARA000	**100520560**	
YAMAHA							
Bw'S	50	2004	2016	SA231	3VLE35552000	**100520010**	
Bw'S	50	2004	2016	SA231	3VLE35552000	**100520011**	
Bw'S Bump	50	1997	1998	4SB	3VLE35552000	**100520010**	
Bw'S Bump	50	1997	1998	4SB	3VLE35552000	**100520011**	
Bw'S Easy	50	2013	2013	SA236	3VLE35552000	**100520010**	
Bw'S Easy	50	2013	2013	SA236	3VLE35552000	**100520011**	
Bw'S Naked	50	2003	2003	SA064	3VLE35550000	**100520010**	
Bw'S Naked	50	2003	2003	SA064	3VLE35550000	**100520011**	
Bw'S Naked	50	2004	2004	SA231	3VLE35552000	**100520010**	
Bw'S Naked	50	2004	2004	SA231	3VLE35552000	**100520011**	
Bw'S Naked	50	2009	2016	SA231	3VLE35552000	**100520010**	
Bw'S Naked	50	2009	2016	SA231	3VLE35552000	**100520011**	
Bw'S Next Generation	50	1997	1998	4SB	3VLE35552000	**100520010**	



COLLETTORI ASPIRAZIONE

INLET PIPES

Modello *Model*	**CC**	**Da** *From*	**A** *To*	**Telaio** *Frame*	**OEM**	**Codice RMS** *RMS Code*	**Note** *Notes*
Bw'S Next Generation	50	1997	1998	4SB	3VLE35552000	**100520011**	
Bw'S Next Generation	50	1999	1999	SA051	3VLE35550000	**100520010**	
Bw'S Next Generation	50	1999	1999	SA051	3VLE35550000	**100520011**	
Bw'S Next Generation	50	1999	2002	SA051	3VLE35552000	**100520010**	
Bw'S Next Generation	50	1999	2002	SA051	3VLE35552000	**100520011**	
Bw'S Next Generation	50	2003	2003	SA051	3VLE35550000	**100520010**	
Bw'S Next Generation	50	2003	2003	SA051	3VLE35550000	**100520011**	
Bw'S Next Generation	50	2004	2006	SA056	3VLE35552000	**100520010**	
Bw'S Next Generation	50	2004	2006	SA056	3VLE35552000	**100520011**	
Bw'S Original	50	1997	1998	3WW\4VV	3VLE35552000	**100520010**	
Bw'S Original	50	1997	1998	3WW\4VV	3VLE35552000	**100520011**	
Bw'S Original	50	1999	1999	SA061	3VLE35552000	**100520010**	
Bw'S Original	50	1999	1999	SA061	3VLE35552000	**100520011**	
Bw'S Original	50	1999	2002	SA061	3VLE35552000	**100520010**	
Bw'S Original	50	1999	2002	SA061	3VLE35552000	**100520011**	
Bw'S Original Euro2	50	2003	2003	SA064	3VLE35550000	**100520010**	
Bw'S Original Euro2	50	2003	2003	SA064	3VLE35550000	**100520011**	
Bw'S R	50	2001	2001	SA061	3VLE35550000	**100520010**	
Bw'S R	50	2001	2001	SA061	3VLE35550000	**100520011**	
Cs Jog R	50	2002	2002	SA221	4CUE35550000	**100520020**	
Cs Jog R	50	2002	2002	SA221	4CUE35550000	**100520021**	
Cs Jog R	50	2006	2012	SA22V	4CUE35552000	**100520020**	
Cs Jog R	50	2006	2012	SA22V	4CUE35552000	**100520021**	
Cs Jog R	50	2013	2015	SA486	4CUE35552000	**100520020**	
Cs Jog R	50	2013	2015	SA486	4CUE35552000	**100520021**	
Cs Jog R Euro2	50	2002	2005	SA224	4CUE35552000	**100520020**	
Cs Jog R Euro2	50	2002	2005	SA224	4CUE35552000	**100520021**	
Cw Bw'S Original Euro2	50	2002	2002	SA064	3VLE35550000	**100520010**	
Cw Bw'S Original Euro2	50	2002	2002	SA064	3VLE35550000	**100520011**	
Cw L Bw'S	50	2003	2003	SA064	3VLE35550000	**100520010**	
Cw L Bw'S	50	2003	2003	SA064	3VLE35550000	**100520011**	
Cw L Bw'S	50	2004	2004	SA231	3VLE35550000	**100520010**	
Cw L Bw'S	50	2004	2004	SA231	3VLE35550000	**100520011**	
Cw Rs Spy	50	1995	1998	4UP1\4UP2\4UP4	3VLE35552000	**100520010**	
Cw Rs Spy	50	1995	1998	4UP1\4UP2\4UP4	3VLE35552000	**100520011**	
Cw Sp Bw'S Original Euro2	50	2002	2002	SA064	3VLE35550000	**100520010**	
Cw Sp Bw'S Original Euro2	50	2002	2002	SA064	3VLE35550000	**100520011**	
Dt R - Dt Rsm	50	2003	2005	70K10\70K1A	4YVE35652000	**100520340**	
Dt R - Dt X	50	2006	2007	70K10\70K1A	4YVE35651000	**100520340**	
Dt R - Dt X	50	2008	2011	70K10\70K1A	4YVE35653000	**100520340**	
Ew Slider	50	2000	2002	SA091	3VLE35552000	**100520010**	
Ew Slider	50	2000	2002	SA091	3VLE35552000	**100520011**	
Ns50 Aerox	50	2013	2016	SA421	4CUE35552000	**100520020**	
Ns50 Aerox	50	2013	2016	SA421	4CUE35552000	**100520021**	
Ns50F Aerox F	50	2014	2016	SA426	3B3E35850100	**100520540**	
Ns50N Aerox Naked	50	2013	2016	SA424	4CUE35552000	**100520020**	
Ns50N Aerox Naked	50	2013	2016	SA424	4CUE35552000	**100520021**	
Tzr	50	2003	2006	RA031	4YVE35652000	**100520340**	
Tzr	50	2007	2007	RA033	4YVE35652000	**100520340**	
Tzr	50	2008	2008	RA033	4YVE35653000	**100520340**	
Tzr	50	2010	2011	RA033	4YVE35653000	**100520340**	
Tzr	50	2012	2012	RA041	4YVE35653000	**100520340**	
Tzr Rr	50	2005	2005	RA031	4YVE35652000	**100520340**	
Xf Giggle	50	2008	2008	SA351	3B3E35850100	**100520540**	
Ya R Axis	50	1995	1996	4PC3\4PC6	4CUE35552000	**100520020**	
Ya R Axis	50	1995	1996	4PC3\4PC6	4CUE35552000	**100520021**	
Yh Why	50	1998	1998	SA031	4CUE35550000	**100520020**	
Yh Why	50	1998	1998	SA031	4CUE35550000	**100520021**	



Modello *Model*	**CC**	**Da** *From*	**A** *To*	**Telaio** *Frame*	**OEM**	**Codice RMS** *RMS Code*	**Note** *Notes*
Yh Why	50	2001	2002	SA03B	4CUE35552000	**100520020**	
Yh Why	50	2001	2002	SA03B	4CUE35552000	**100520021**	
Yh Why	50	2006	2006	SA03E	4CUE35550000	**100520020**	
Yh Why	50	2006	2006	SA03E	4CUE35550000	**100520021**	
Yh Why Euro1	50	1999	2000	SA031	4CUE35552000	**100520020**	
Yh Why Euro1	50	1999	2000	SA031	4CUE35552000	**100520021**	
Yh Why Euro2	50	2003	2005	SA03E	4CUE35552000	**100520020**	
Yh Why Euro2	50	2003	2005	SA03E	4CUE35552000	**100520021**	
Ym Breeze	50	1994	1995	4KH1\4KH3	4CUE35552000	**100520020**	
Ym Breeze	50	1994	1995	4KH1\4KH3	4CUE35552000	**100520021**	
Yn F Neo'S 4	50	2009	2010	SA401	3B3E35850100	**100520540**	
Yn F Neo'S 4	50	2011	2012	SA404	3B3E35850100	**100520540**	
Yn F Neo'S 4	50	2012	2015	SA461	3B3E35850100	**100520540**	
Yn Neo'S	50	2004	2006	SA211	4CUE35552000	**100520020**	
Yn Neo'S	50	2004	2006	SA211	4CUE35552000	**100520021**	
Yn Neo'S	50	2007	2012	SA341	4CUE35552000	**100520020**	
Yn Neo'S	50	2007	2012	SA341	4CUE35552000	**100520021**	
Yn Neo'S	50	2012	2016	SA451	4CUE35552000	**100520020**	
Yn Neo'S	50	2012	2016	SA451	4CUE35552000	**100520021**	
Yn Neo'S Easy	50	2013	2013	SA457	4CUE35552000	**100520020**	
Yn Neo'S Easy	50	2013	2013	SA457	4CUE35552000	**100520021**	
Yn Neo'S Euro2	50	2002	2003	SA211	4CUE35552000	**100520020**	
Yn Neo'S Euro2	50	2002	2003	SA211	4CUE35552000	**100520021**	
Yn R Neo'S	50	1997	2001	5AD\SA151	4CUE35552000	**100520020**	
Yn R Neo'S	50	1997	2001	5AD\SA151	4CUE35552000	**100520021**	
Yn R Neo'S	50	2002	2002	SA151	4CUE35550000	**100520020**	
Yn R Neo'S	50	2002	2002	SA151	4CUE35550000	**100520021**	
Yq Aerox	50	1997	1998	5BR\5BR00	4CUE35550000	**100520020**	
Yq Aerox	50	1997	1998	5BR\5BR00	4CUE35550000	**100520021**	
Yq Aerox	50	2001	2002	SA141	4CUE35552000	**100520020**	
Yq Aerox	50	2001	2002	SA141	4CUE35552000	**100520021**	
Yq Aerox	50	2004	2006	SA144	4CUE35552000	**100520020**	
Yq Aerox	50	2004	2006	SA144	4CUE35552000	**100520021**	
Yq Aerox	50	2007	2008	SA144	4CUE35550000	**100520020**	
Yq Aerox	50	2007	2008	SA144	4CUE35550000	**100520021**	
Yq Aerox	50	2009	2012	SA144	4CUE35552000	**100520020**	
Yq Aerox	50	2009	2012	SA144	4CUE35552000	**100520021**	
Yq Aerox R	50	1999	1999	5BR00	4CUE35550000	**100520020**	
Yq Aerox R	50	1999	1999	5BR00	4CUE35550000	**100520021**	
Yq Aerox R	50	1999	2000	5BR00	4CUE35552000	**100520020**	
Yq Aerox R	50	1999	2000	5BR00	4CUE35552000	**100520021**	
Yq L Aerox Euro2	50	2003	2003	SA144	4CUE35552000	**100520020**	
Yq L Aerox Euro2	50	2003	2003	SA144	4CUE35552000	**100520021**	
Yp125 Majesty	125	1998	2000	SE021	5DS135850000	**100520460**	
Yp125E Majesty	125	2003	2005	SE066	5XME35850000	**100520550**	
Yp125E Majesty	125	2006	2006	SE066	5XME35850000	**100520550**	
Yp125E Majesty	125	2007	2007	SE068	5XME35850000	**100520550**	
Yp125E Majesty	125	2008	2008	SE068	5XME35850000	**100520550**	
Yp125E Majesty	125	2009	2009	SE068	5XME35850000	**100520550**	
Yp150 Majesty	150	2000	2000	SG051	5DS135850000	**100520460**	
Yp180E Majesty	180	2003	2006	SG121	5XME35850000	**100520550**	
Xp T-Max	500	2001	2003	SJ011\4\5\6	5GJ135860200	**100520500**	Sinistro | *Left*
Xp T-Max	500	2001	2003	SJ011\4\5\6	5GJ135960100	**100520510**	Destro | *Right*
Xp T-Max	500	2004	2005	SJ031\SJ032	5VU135860100	**100520520**	Sinistro | *Left*
Xp T-Max	500	2004	2005	SJ031\SJ032	5VU135960100	**100520530**	Destro | *Right*
Xp T-Max	500	2006	2006	SJ031\SJ032	5VU135860000	**100520520**	Sinistro | *Left*
Xp T-Max	500	2006	2006	SJ031\SJ032	5VU135960000	**100520530**	Destro | *Right*
Xp T-Max	500	2007	2007	SJ051\SJ032	5VU135860000	**100520520**	Sinistro | *Left*



COLLETTORI ASPIRAZIONE

INLET PIPES

Modello *Model*	**CC**	**Da** *From*	**A** *To*	**Telaio** *Frame*	**OEM**	**Codice RMS** *RMS Code*	**Note** *Notes*
Xp T-Max	500	2007	2007	SJ051\SJ032	5VU135960000	**100520530**	Destro | *Right*
Xp T-Max	500	2008	2008	SJ061\SJ062	5VU135860000	**100520520**	Sinistro | *Left*
Xp T-Max	500	2008	2008	SJ061\SJ062	5VU135960000	**100520530**	Destro | *Right*
Xp T-Max	500	2009	2011	SJ061\SJ062	5VU135860100	**100520520**	Sinistro | *Left*
Xp T-Max	500	2009	2011	SJ061\SJ062	5VU135960100	**100520530**	Destro | *Right*
Xp T-Max Abs	500	2005	2006	SJ034	5VU135860000	**100520520**	Sinistro | *Left*
Xp T-Max Abs	500	2005	2006	SJ034	5VU135960000	**100520530**	Destro | *Right*
Xp T-Max Abs	500	2006	2006	SJ034	5VU135960000	**100520530**	Destro | *Right*
Xp T-Max Abs	500	2007	2007	SJ052	5VU135860000	**100520520**	Sinistro | *Left*
Xp T-Max Abs	500	2007	2007	SJ052	5VU135960000	**100520530**	Destro | *Right*
Xp T-Max Abs	500	2008	2011	SJ064	5VU135860100	**100520520**	Sinistro | *Left*
Xp T-Max Abs	500	2008	2011	SJ064	5VU135960100	**100520530**	Destro | *Right*
Xp T-Max Abs Sv	500	2010	2011	SJ064	5VU135860100	**100520520**	Sinistro | *Left*
Xp T-Max Abs Sv	500	2010	2011	SJ064	5VU135960100	**100520530**	Destro | *Right*
Xp T-Max Black Max	500	2006	2006	SJ031	5VU135860000	**100520520**	Sinistro | *Left*
Xp T-Max Black Max	500	2006	2006	SJ031	5VU135960000	**100520530**	Destro | *Right*
Xp T-Max Black Max-Night Max	500	2007	2007	SJ051	5VU135860000	**100520520**	Sinistro | *Left*
Xp T-Max Black Max-Night Max	500	2007	2007	SJ051	5VU135960000	**100520530**	Destro | *Right*
Xp T-Max Sv	500	2011	2011	SJ061	5VU135860100	**100520520**	Sinistro | *Left*
Xp T-Max Sv	500	2011	2011	SJ061	5VU135960100	**100520530**	Destro | *Right*
Xp T-Max White Max	500	2010	2010	SJ061\SJ062	5VU135860100	**100520520**	Sinistro | *Left*
Xp T-Max White Max	500	2010	2010	SJ061\SJ062	5VU135960100	**100520530**	Destro | *Right*



100520010

100520011

APRILIA: R.O. AP8206514
MBK: R.O. 3VLE35550000 - 3VLE35552000
YAMAHA: R.O. 3VLE35552000 - 3VLE35550000



100520020

100520021

APRILIA: R.O. AP8206466
MALAGUTI: R.O. 76004500
MBK: R.O. 4CUE35550000
YAMAHA: R.O. 4CUE35550000 - 4CUE35552000



100520030

GILERA: R.O. 430206
PIAGGIO: R.O. 430206



100520040

100520041

PIAGGIO: R.O. 480799



100520050

100520051

PIAGGIO: R.O. 485587



100520100

DERBI: R.O. 830939
GILERA: R.O. 830939
PIAGGIO: R.O. 830939 - 436095



100520130

Per carburatore 19/19 | *19/19 carburetor*
PIAGGIO: R.O.1128695



100520150

Per carburatore 16/10 | *16/10 carburetor*
PIAGGIO: R.O. 4161114



100520160

Per carburatore 16/16 | *16/16 carburetor*
PIAGGIO: R.O. 078542





100520170

Per carburatore 16/10 | *16/10 carburetor*

PIAGGIO: R.O. 4308315



100520200

FL-3 fori per carburatore 19/19 | *3 holes carburetor 19/19*

PIAGGIO: R.O. 224755



100520220

Attacco 3 Fori, Ø esterno 19 mm, lunghezza 115 mm | *3 Pin connection, Ø 19 mm, lenght 115 mm*

PIAGGIO: R.O. 286889



100520230

Attacco 3 Fori, Ø esterno 19 mm, lunghezza 135 mm | *3 Pin connection, Ø 19 mm, lenght 135 mm*

PIAGGIO: R.O. 127183



100520240

100520243

100520244

PIAGGIO: R.O. 566859



100520260

100520261

PEUGEOT



100520340

YAMAHA: R.O. 4YVE35652000 - 4YVE35651000



100520360

KYMCO: R.O. 00102048



100520370

KYMCO: R.O. 00122198 - 00122116 - 00117091





100520390

KYMCO: R.O. 00102040 - 00117075 - 00102601



100520400

KYMCO: R.O. 00117182



100520410

KYMCO: R.O. 00117491



100520420

KYMCO: R.O. 00117198



100520430

KYMCO: R.O. 00117345



100520440

PIAGGIO: R.O. 849465



100520450

PIAGGIO: R.O. 840949 - B016579



100520460

YAMAHA: R.O. 5DS135850000



100520470

PIAGGIO: R.O. 484748



100520480

PIAGGIO: R.O. 845946



100520490

PIAGGIO: R.O. 969405



100520500

YAMAHA: R.O. 5GJ135860200





COLLETTORI ASPIRAZIONE

INLET PIPES

100520510

YAMAHA: R.O. 5GJ135960100



100520520

YAMAHA: R.O. 5VU135860100 - 5VU135860000



100520530

YAMAHA: R.O. 5VU135960100 - 5VU135960000



100520540 NEW

YAMAHA: R.O. 3B3E35850100



100520550 NEW

MBK-YAMAHA: R.O. 5XME35850000



100520560 NEW

SYM: 1711A-ARA-000





Modello *Model*	CC	Da *From*	A *To*	Telaio *Frame*	OEM	Codice RMS *RMS Code*	Note *Notes*
APRILIA							
Area 51	50	1998	2000	MY	AP8206557	**100560020**	
Gulliver	50	1995	1998	LH000	AP8206557	**100560020**	
Gulliver Lc	50	1996	1998	LH040	AP8206557	**100560020**	
Mojito Custom 2T Motore Piaggio	50	2004	2010	TF000\TFA00	82775R	**100560110**	
Rally	50	1995	2003	MD000\MDH00	AP8206557	**100560020**	
Rally Liquid Cooled	50	1996	1999	MDA00\MAD10	AP8206557	**100560020**	
Scarabeo	50	1993	1997	HS\LE	AP8206557	**100560020**	
Scarabeo	50	1998	1998	PF000\PF0100	AP8206557	**100560020**	
Scarabeo	50	1999	1999	PF0\PFG	AP8206557	**100560020**	
Scarabeo	50	2000	2005	PFG00\TH000	AP8206557	**100560020**	
Sonic	50	1998	2007	PB000\TL000	AP8206557	**100560020**	
Sonic Gp	50	1998	2008	PB010\TLA00	AP8206557	**100560020**	
Sr	50	1994	1996	LF	AP8206557	**100560020**	
Sr Iniezione E Carburatore	50	2014	2014	VFB00\VFD00\VFU00	82775R	**100560110**	Modello a iniezione
Sr Iniezione E Carburatore	50	2014	2014	VFB00\VFD00\VFU00	82827R	**100560100**	Modello a carburatore
Sr Liquid Cooled	50	1994	1996	LC	AP8206557	**100560020**	
Sr Motard 2T Euro4	50	2018	2018	METCA4100	82775R	**100560110**	
Sr R Factory Ie E Carburatore	50	2010	2014	VFB00\VFD00\VFU00	82775R	**100560110**	Modello a iniezione
Sr R Factory Ie E Carburatore	50	2010	2014	VFB00\VFD00\VFU00	82827R	**100560100**	Modello a carburatore
Sr R H2O 2T Euro 4	50	2018	2018	KLA00	82775R	**100560110**	
Sr R, R Factory	50	2004	2009	VFB00\VFD00\VFJ\U	82775R	**100560110**	Modello a iniezione
Sr R, R Factory	50	2004	2009	VFB00\VFD00\VFJ\U	82827R	**100560100**	Modello a carburatore
Sr Stealth, Racing	50	1997	2000	MZ	AP8206557	**100560020**	
Sr Www	50	1997	2001	LYH00	AP8206557	**100560020**	
DERBI							
Atlantis O2	50	2002	2002	AL1A1A	486353	**100560100**	
Atlantis O2 Bullet	50	2003	2005	AL1AE2	82727R	**100560100**	
Atlantis O2 City	50	2003	2006	AL1AE2	82727R	**100560100**	
Atlantis O2 Red Bullet	50	2003	2003	AL1AE2	82727R	**100560100**	
Atlantis O2 Two Chic	50	2005	2005	AL1AE2	82727R	**100560100**	
Gp1	50	2001	2002	PREDWB\PREDSB	435867	**100560110**	
Gp1	50	2003	2003	PREDXB	435867	**100560110**	
Gp1 E2	50	2003	2003	PREDXB	82827R	**100560100**	
Gp1 Euro2	50	2005	2005	PR1A1A	82775R	**100560110**	
Gp1 Open Eu2	50	2006	2009	PR1B1A	82775R	**100560110**	
Gp1 Race Eu2	50	2005	2007	PR1A1A	82775R	**100560110**	
GILERA							
Dna	50	2000	2002	C2700	82775R	**100560110**	
Dna	50	2005	2007	C2700	82775R	**100560110**	
Dna Gp Experience	50	2003	2004	C2700	82775R	**100560110**	
Easy Moving	50	1995	1996	SSP2T	435867	**100560110**	
Ice	50	2001	2005	C3000	486353	**100560100**	
Runner	50	1997	2000	C1400	82727R	**100560100**	
Runner Poggiali	50	2002	2002	C3620	435867	**100560110**	
Runner Purejet	50	2002	2004	C36100	82727R	**100560100**	
Runner Sp	50	2002	2004	C3640	435867	**100560110**	
Runner Sp	50	2005	2007	C46100	82775R	**100560110**	
Runner Sp	50	2010	2012	C46100	82775R	**100560110**	
Runner Sp Special Edition	50	2007	2007	C46100	82775R	**100560110**	
Runner Sp St & Simoncelli	50	2008	2009	C46100	82775R	**100560110**	
Stalker	50	1997	2004	C1300	82827R	**100560100**	
Stalker	50	2003	2003	C1300	82775R	**100560110**	
Storm	50	1994	1995	TEC1T	435867	**100560110**	
Typhoon	50	1994	1997	TEC1T	82827R	**100560100**	
Typhoon X	50	1998	1999	TEC2T	82827R	**100560100**	
Typhoon Xr	50	2000	2000	C1900	82827R	**100560100**	



PACCHI LAMELLARI

REED VALVES

Modello *Model*	**CC**	**Da** *From*	**A** *To*	**Telaio** *Frame*	**OEM**	**Codice RMS** *RMS Code*	**Note** *Notes*
MALAGUTI							
Centro Base	50	1993	1994	36	76004600	**100560020**	
Centro Sl	50	1994	1998	36T	76004600	**100560020**	
Centro Sl Kat	50	1999	2000	4900000	76004600	**100560020**	
Ciak	50	1999	2000	5200000	76004600	**100560020**	
Ciak Master	50	2004	2004		76004600	**100560020**	
Ciak Master Euro 2	50	2006	2006	64000	76004600	**100560020**	
Ciak Mono Euro 2	50	2003	2003		76004600	**100560020**	
Ciak Mono Euro 2 2.3	50	2003	2003		76004600	**100560020**	
Ciak Td	50	2000	2001	5200000	76004600	**100560020**	
F10 Jet Line	50	1992	1998	35	76004600	**100560020**	
F10 Kat	50	1999	2000	48	76004600	**100560020**	
F10 Restyling Eu1	50	2001	2002	48	76004600	**100560020**	
F10 Restyling Eu2-2.3	50	2003	2004	48\48000	76004600	**100560020**	
F10 Restyling Euro2	50	2002	2003	48000	76004600	**100560020**	
F10 Restyling Euro2	50	2006	2006	48000	76004600	**100560020**	
F12 Aria Restyling Euro 2	50	2006	2006	46000	76004600	**100560020**	
F12 Lc Restyling Euro 2	50	2006	2006	62000	76004600	**100560020**	
F12 Phantom	50	1994	1998	40	76004600	**100560020**	
F12 Phantom Euro1	50	1999	2000	4600000	76004600	**100560020**	
F12 Phantom Lc	50	1994	1998	41	76004600	**100560020**	
F12 Phantom Lc Euro1	50	1999	2000	4700000	76004600	**100560020**	
F12 Phantom Lc Restyling Eu1	50	2001	2002	4700000	76004600	**100560020**	
F12 Phantom Lc Restyling Eu2	50	2002	2002	6200000	76004600	**100560020**	
F12 Phantom Lc Restyling Eu2-2.3	50	2003	2004	6200000	76004600	**100560020**	
F12 Phantom Lc Twin Disks	50	1998	1998	41	76004600	**100560020**	
F12 Phantom Restyling Eu1	50	2001	2002	4600000	76004600	**100560020**	
F12 Phantom Restyling Eu2	50	2002	2002	4600000	76004600	**100560020**	
F12 Phantom Restyling Eu2-2.3	50	2003	2004	4600000	76004600	**100560020**	
F15 Fire Fox	50	1996	1998	44	76004600	**100560020**	
F15 Fire Fox Air Cooled	50	2005	2006	73K20173	76004600	**100560020**	
F15 Fire Fox Euro2	50	2002	2003	44	76004600	**100560020**	
F15 Fire Fox Restyling Euro2-2.3	50	2003	2004	44	76004600	**100560020**	
F15 Fire Fox Twin Disks & Special	50	1998	1999	44	76004600	**100560020**	
F15 Fire Fox Twin Disks Digit Kat	50	1998	2000	4400000	76004600	**100560020**	
F15 Lc Restyling Euro 2	50	2004	2005	44000044	76004600	**100560020**	
F15 Lc-Tds Restyling Euro 1	50	2001	2001	4400000	76004600	**100560020**	
Grizzly 4 Wheels	50	2004	2009	RFRSM5061	76004600	**100560020**	
Yesterday - Yesterday Euro	50	1997	2000	45	76004600	**100560020**	
MBK							
Cs Mach G Euro1	50	2002	2003	5RW	4CUE36100000	**100560020**	
Cs Mach G Euro2	50	2002	2004	5RW	4CUE36100000	**100560020**	
Cw Booster	50	1990	1991	3WW	3VLE36100000	**100560010**	
Cw Booster	50	2001	2002	5NT	2EX136100000	**100560010**	
Cw Booster	50	2004	2004	5WW2	2EX136100000	**100560010**	
Cw Booster (Ita)	50	1992	1994	3WW	3VLE36100000	**100560010**	
Cw Booster Naked	50	2003	2003	1D12	2EX136100000	**100560010**	
Cw Booster Spirit	50	1996	1998	4VU	3VLE36100000	**100560010**	
Cw Booster Spirit (Ita)	50	1999	1999	4VU9	3VLE36100000	**100560010**	
Cw Booster Spirit (Ita)	50	2000	2000	5LE\5MM	3VLE36100000	**100560010**	
Cw Booster Spirit Euro2	50	2002	2002	5RH2	2EX136100000	**100560010**	
Cw Booster Spirit Euro2	50	2003	2003	5XW\5XX	2EX136100000	**100560010**	
Cw L Booster	50	2001	2003	5SX	2EX136100000	**100560010**	
Cw L Booster Spirit	50	2003	2003	5XY2\5YA2	2EX136100000	**100560010**	
Cw R Booster Road (Ita)	50	1994	1995	4PA1	3VLE36100000	**100560010**	
Cw Rs Booster Ng	50	2001	2002	5NU	2EX136100000	**100560010**	
Cw Rs Booster Ng	50	2003	2003	1B02	2EX136100000	**100560010**	
Cw Rs Booster Ng (Ita)	50	1995	1998	4SB	3VLE36100000	**100560010**	



Modello *Model*	CC	Da *From*	A *To*	Telaio *Frame*	OEM	Codice RMS *RMS Code*	Note *Notes*
Cw Rs Booster Ng (Ita)	50	1999	1999	5FX2	3VLE36100000	**100560010**	
Cw Rs Booster Ng Euro1	50	1999	2000	5LF	3VLE36100000	**100560010**	
Cw Rsp Booster Rocket (Ita)	50	1997	1998	4UP	3VLE36100000	**100560010**	
Cw Rsx Booster Track (Ita)	50	1996	1998	4YB	3VLE36100000	**100560010**	
Cw Sp Booster Spirit Euro2	50	2002	2002	5RY2	2EX136100000	**100560010**	
Ew Stunt	50	2000	2002	5LH	2EX136100000	**100560010**	
Ya R Forte (Che-Ita)	50	1994	1996	4PC	3KJ136100000	**100560020**	
Ya Ta New Sorriso	50	1995	1996	4SD1	4CUE36100000	**100560020**	
Ye Evolis (Ita)	50	1992	1995	4EF	4CUE36100000	**100560020**	
Yh Flipper	50	1998	1998	5EU	4CUE36100000	**100560020**	
Yh Flipper	50	2001	2002	5PF	4CUE36100000	**100560020**	
Yh Flipper Catalitico	50	1999	2000	5LD	3KJ136100000	**100560020**	
Yh Flipper Euro2	50	2003	2004	5UB	3KJ136100000	**100560020**	
Ym Fizz (Ita)	50	1994	1995	4KH	4CUE36100000	**100560020**	
Yn R Ovetto (Che-Ita)	50	1997	2001	5AD\5MR	3KJ136100000	**100560020**	
Yn R Ovetto Euro1	50	2002	2004	5RN	3KJ136100000	**100560020**	
Yn R Ovetto Euro2	50	2002	2003	5RN	4CUE36100000	**100560020**	
Yq L Nitro Jaguar	50	2004	2004	5SB9	4CUE36100000	**100560020**	
Yq Nitro	50	2001	2002	5PE	4CUE36100000	**100560020**	
Yq Nitro	50	2004	2004	5SB	3KJ136100000	**100560020**	
Yq Nitro (Ita)	50	1997	1998	5BR	4CUE36100000	**100560020**	
Yq Nitro (Ita)	50	1999	2000	5LC	4CUE36100000	**100560020**	
Yq Nitro Euro2	50	2003	2003	5SB	4CUE36100000	**100560020**	
PEUGEOT							
Jet Force 50 C-Tech	50	2005	2006	VGA A1AAAA	-	**100560130**	
Jet Force 50 C-Tech	50	2007	2009	VGA A1AABA	-	**100560130**	
Jet Force 50 C-Tech Rally Victories	50	2006	2007	VGA A1AAAA	-	**100560130**	
Jet Force 50 C-Tech Rcup	50	2007	2009	VGA A1AABA	-	**100560130**	
Jet Force 50 Darkside	50	2008	2015	VGA A1AABA	-	**100560130**	
Jet Force 50 Ice Blade	50	2010	2012	VGA A1AABA	-	**100560130**	
Ludix 50 Classic 1 Seater	50	2004	2007	VGA L1AABM/EM	-	**100560130**	
Ludix 50 Classic 2 Seater	50	2006	2007	VGA L1AAEA	-	**100560130**	
Ludix 50 Elegance	50	2004	2007	VGA L1AABA/EA	-	**100560130**	
Ludix 50 Ep	50	2008	2011	-	-	**100560130**	
Ludix 50 Ii Dt One Luxe 2 Sitzer	50	2008	2011	VGA L1AADA	-	**100560130**	
Ludix 50 Ii Elegance	50	2008	2011	VGA L1AAEA	-	**100560130**	
Ludix 50 Ii Lc Blaster Ice Blade	50	2010	2011	VGA L1ACFA	-	**100560130**	
Ludix 50 Ii Lc Blaster Rcup	50	2008	2009	VGA L1ACFA	-	**100560130**	
Ludix 50 Ii Lc Blaster Rs12	50	2008	2011	VGA L1ACFA	-	**100560130**	
Ludix 50 Ii Snake Furious	50	2008	2011	VGA L1AAFA	-	**100560130**	
Ludix 50 Ii Snake Naked 10 Inch	50	2008	2011	-	-	**100560130**	
Ludix 50 Ii Trend 12 Inch	50	2008	2011	VGA L1AAFA	-	**100560130**	
Ludix 50 Ii Tt One 1 Sitzer	50	2008	2011	VGA L1AADM	-	**100560130**	
Ludix 50 Ii Tt One 2 Sitzer	50	2008	2012	VGA L1AADA	-	**100560130**	
Ludix 50 Lc Blaster 10 Zoll	50	2005	2007	VGA L1ACCA	-	**100560130**	
Ludix 50 Lc Rs Blaster 12 Zoll	50	2007	2007	-	-	**100560130**	
Ludix 50 One 1 Sitzer	50	2004	2007	VGA L1AAAM/DM	-	**100560130**	
Ludix 50 One 2 Sitzer	50	2006	2007	VGA L1AADA	-	**100560130**	
Ludix 50 Pro 2T	50	2008	2011	-	-	**100560130**	
Ludix 50 Snake	50	2004	2007	VGA L1AAACA/FA	-	**100560130**	
Ludix 50 Trend 10 Inch	50	2004	2007	VGA L1AAAAA	-	**100560130**	
Speedfight 3 50 Ac Dt	50	2009	2009	VGA F1AAAA	-	**100560130**	
Speedfight 3 50 Ac Dt	50	2010	2011	-	-	**100560130**	
Speedfight 3 50 Ac Dt Darkside	50	2011	2011	-	-	**100560130**	
Speedfight 3 50 Ac Dt Ice Blade	50	2011	2015	-	-	**100560130**	
Speedfight 3 50 Ac Dt Musik	50	2011	2011	-	-	**100560130**	
Speedfight 3 50 Ac Dt Rs	50	2010	2011	-	-	**100560130**	
Speedfight 3 50 Ac Dt Team	50	2011	2011	-	-	**100560130**	



PACCHI LAMELLARI

REED VALVES

Modello *Model*	**CC**	**Da** *From*	**A** *To*	**Telaio** *Frame*	**OEM**	**Codice RMS** *RMS Code*	**Note** *Notes*
Speedfight 3 50 Lc Dd	50	2009	2009	VGA F1ABAA	-	**100560130**	
Speedfight 3 50 Lc Dd	50	2010	2011	-	-	**100560130**	
Speedfight 3 50 Lc Dd Darkside	50	2011	2011	-	-	**100560130**	
Speedfight 3 50 Lc Dd Ice Blade	50	2011	2015	-	-	**100560130**	
Speedfight 3 50 Lc Dd Rs	50	2010	2011	-	-	**100560130**	
Speedfight 3 50 Lc Dd Team	50	2011	2011	-	-	**100560130**	
Vivacity 50 3 2T New	50	2008	2017	-	-	**100560130**	
Vivacity 50 3 2T New Sportline	50	2011	2012	-	-	**100560130**	
PIAGGIO							
Diesis	50	2001	2001	C3400	82727R	**100560100**	
Liberty 2T Rst	50	2004	2004	C42100	82727R	**100560100**	
Liberty Ptt Eu2	50	2004	2005	C37401	82727R	**100560100**	
Nrg Power Dd	50	2005	2017	C45100	82775R	**100560110**	
Nrg Power Dd Serie Speciale	50	2007	2012	C45100	82775R	**100560110**	
Nrg Power H2O E4 No Abs	50	2018	2018	C47100	82775R	**100560110**	
Nrg Power Purejet	50	2004	2005	C45200	82775R	**100560110**	
Nrg Purejet	50	2002	2004	C320001	486353	**100560100**	
Nrg Rst Mc2	50	1996	1998	C04000	82727R	**100560100**	
Ntt	50	1995	1996	SAL1T	435867	**100560110**	
Quartz	50	1992	1996	NSP1T	435867	**100560110**	
Typhoon	50	2001	2004	C29000	82727R	**100560100**	
Typhoon 2T Euro4	50	2018	2018	CA4101	82775R	**100560110**	
Vespa Et2	50	1997	2005	C1600\38100	82775R	**100560110**	
Zip	50	1995	1996	SSP2T	435867	**100560110**	
Zip	50	2000	2004	C25000	82775R	**100560110**	
Zip Bimodale	50	1994	1997	BMZ1T	435867	**100560110**	
Zip Fast Raider	50	1993	1994	SSP1T	435867	**100560110**	
Zip Fast Raider Rst	50	1996	1997	C0700	435867	**100560110**	
Zip Sp	50	1996	2000	C1100	82775R	**100560110**	
Zip Sp Euro2	50	2006	2013	C25000	82775R	**100560110**	
Skr City	80	1999	1999	SP81T	435867	**100560110**	
YAMAHA							
Bw'S	50	2004	2016	SA231	2EX136100000	**100560010**	
Bw'S Bump	50	1997	1998	4SB	3VLE36100000	**100560010**	
Bw'S Easy	50	2013	2013	SA236	2EX136100000	**100560010**	
Bw'S Naked	50	2003	2003	SA064	2EX136100000	**100560010**	
Bw'S Naked	50	2004	2004	SA231	2EX136100000	**100560010**	
Bw'S Naked	50	2009	2016	SA231	2EX136100000	**100560010**	
Bw'S Next Generation	50	1997	1998	4SB	3VLE36100000	**100560010**	
Bw'S Next Generation	50	1999	1999	SA051	3VLE36100000	**100560010**	
Bw'S Next Generation	50	1999	2000	SA051	3VLE36100000	**100560010**	
Bw'S Next Generation	50	2001	2003	SA051	2EX136100000	**100560010**	
Bw'S Next Generation	50	2004	2006	SA056	2EX136100000	**100560010**	
Bw'S Original	50	1997	1998	3WW\4VV	3VLE36100000	**100560010**	
Bw'S Original	50	1999	1999	SA061	3VLE36100000	**100560010**	
Bw'S Original	50	1999	2000	SA061	3VLE36100000	**100560010**	
Bw'S Original	50	2001	2002	SA061	2EX136100000	**100560010**	
Bw'S Original Euro2	50	2003	2003	SA064	2EX136100000	**100560010**	
Bw'S R	50	2001	2001	SA061	2EX136100000	**100560010**	
Cs Jog R	50	2002	2002	SA221	4CUE36100000	**100560020**	
Cs Jog R	50	2006	2012	SA22V	3KJ136100000	**100560020**	
Cs Jog R	50	2013	2015	SA486	3KJ136100000	**100560020**	
Cs Jog R Euro2	50	2002	2005	SA224	3KJ136100000	**100560020**	
Cw Bw'S Original Euro2	50	2002	2002	SA064	2EX136100000	**100560010**	
Cw L Bw'S	50	2003	2003	SA064	2EX136100000	**100560010**	
Cw L Bw'S	50	2004	2004	SA231	2EX136100000	**100560010**	
Cw Rs Spy	50	1995	1998	4UP1\4UP2\4UP4	3VLE36100000	**100560010**	
Cw Sp Bw'S Original Euro2	50	2002	2002	SA064	2EX136100000	**100560010**	



Modello *Model*	**CC**	**Da** *From*	**A** *To*	**Telaio** *Frame*	**OEM**	**Codice RMS** *RMS Code*	**Note** *Notes*
Ew Slider	50	2000	2002	SA091	2EX136100000	**100560010**	
Ya R Axis	50	1995	1996	4PC3\4PC6	3KJ136100000	**100560020**	
Ya Za Jog Z	50	1995	1995	3XG\4SC	3KJ136100000	**100560020**	
Yh Why	50	1998	1998	SA031	4CUE36100000	**100560020**	
Yh Why	50	2001	2002	SA03B	3KJ136100000	**100560020**	
Yh Why	50	2006	2006	SA03E	4CUE36100000	**100560020**	
Yh Why Euro1	50	1999	2000	SA031	3KJ136100000	**100560020**	
Yh Why Euro2	50	2003	2005	SA03E	3KJ136100000	**100560020**	
Ym Breeze	50	1994	1995	4KH1\4KH3	3KJ136100000	**100560020**	
Yn Neo'S	50	2004	2006	SA211	3KJ136100000	**100560020**	
Yn Neo'S	50	2007	2012	SA341	3KJ136100000	**100560020**	
Yn Neo'S	50	2012	2016	SA451	3KJ136100000	**100560020**	
Yn Neo'S Easy	50	2013	2013	SA457	3KJ136100000	**100560020**	
Yn Neo'S Euro2	50	2002	2003	SA211	3KJ136100000	**100560020**	
Yn R Neo'S	50	1997	2001	5AD\SA151	3KJ136100000	**100560020**	
Yn R Neo'S	50	2002	2002	SA151	4CUE36100000	**100560020**	
Yq Aerox	50	1997	1998	5BR\5BR00	4CUE36100000	**100560020**	
Yq Aerox	50	2001	2002	SA141	3KJ136100000	**100560020**	
Yq Aerox	50	2004	2012	SA144	3KJ136100000	**100560020**	
Yq Aerox R	50	1999	1999	5BR00	4CUE36100000	**100560020**	
Yq Aerox R	50	1999	2000	5BR00	3KJ136100000	**100560020**	
Yq L Aerox Euro2	50	2003	2003	SA144	3KJ136100000	**100560020**	



100560010

MBK: R.O. 2EX136100000
YAMAHA: R.O. 2EX136100000



100560020

Per Motori Minarelli orizzontale | *For Minarelli Engine horizontal*

APRILIA: R.O. AP8206557
MALAGUTI: R.O. 76004600
MBK: R.O. 3KJ136100000
YAMAHA: R.O. 3KJ136100000



100560100

APRILIA: R.O. 82827R
DERBI: R.O. 486353
GILERA: R.O. 486353
PIAGGIO: R.O. 486353



100560110

APRILIA: R.O. 82775R
DERBI: R.O. 435867
GILERA: R.O. 435867
PIAGGIO: R.O. 435867



100560130

PEUGEOT





100620030

PIAGGIO: Ape Car Mp
R.O. 133404



100620041

Per Motori Minarelli orizzontale | *For Horizontal Minarelli Engine*

GILERA 50: Ice 01-05 • Easy Moving 95-96 • Runner 97-00 • Stalker 97-01 • Storm 94-95 • Typhoon 94-97 • Typhoon X 98-99 • Typhoon XR 00
GILERA 125: Typhoon 95-98 • Typhoon X-XR 99-00 • Runner FX-FXR 97-02 (Mikuni)
GILERA 180: Runner FX-FXR 97-02 (Mikuni)
PIAGGIO 50: Diesis 01 • Free 92-94 • Free FL 95-00 • Free Delivery 00-01 • NTT 95-96 • NRG 94-96 • NRG RST MC2 96-98 • NRG Extreme 99-00 • NRG MC3 01-02 • Sfera 91-93 • Sfera Maquillage 2 94 • Sfera RST 95-97 • Typhoon 01 • Vespa ET2 97-01 • Zip 92-96 • Zip RST 96-99 • Zip Fast Rider RST 96-97 • Zip Fast Rider 93-94 • Zip SP 96-00
PIAGGIO 80: SKR City 99
PIAGGIO 125: Hexagon 94-97 • Hexagon LX-LXT 98-99 • Skipper 94-97 • Skipper LX 98-99
R.O. 436096



100620050

PIAGGIO 50: Vespa PK • Vespa PK XL • Vespa PK XL Rush • Vespa N • Vespa FL
PIAGGIO 125: Vespa FL • Vespa PK XL
R.O. 178694



100620060

PIAGGIO 50-90-125: Vespa Primavera
PIAGGIO 125: Vespa Primavera ET3
R.O. 071813



100620070

APRILIA 50: Scarabeo 00-05
APRILIA 100: Scarabeo Motore Minarelli 00 • Scarabeo Motore Yamaha 00
R.O. AP8144248



120620070

PIAGGIO 125: Vespa PX • Vespa PX 30 Anni • Vespa PX Euro2 • Vespa PX T5 • Vespa PXE Arcobaleno
PIAGGIO 150: Vespa PX • Vespa PXE Arcobaleno
R.O. 227205



120620080

PIAGGIO 125-150-200: Vespa PX 1° Serie VNX-VLX-VBX
R.O. 181476



120620090

PIAGGIO 150: Vespa Sprint • Vespa GL
PIAGGIO 180: Vespa Rally
R.O. 093766



120620100

PIAGGIO 160: Vespa GS
PIAGGIO 180: Vespa SS
R.O.077628



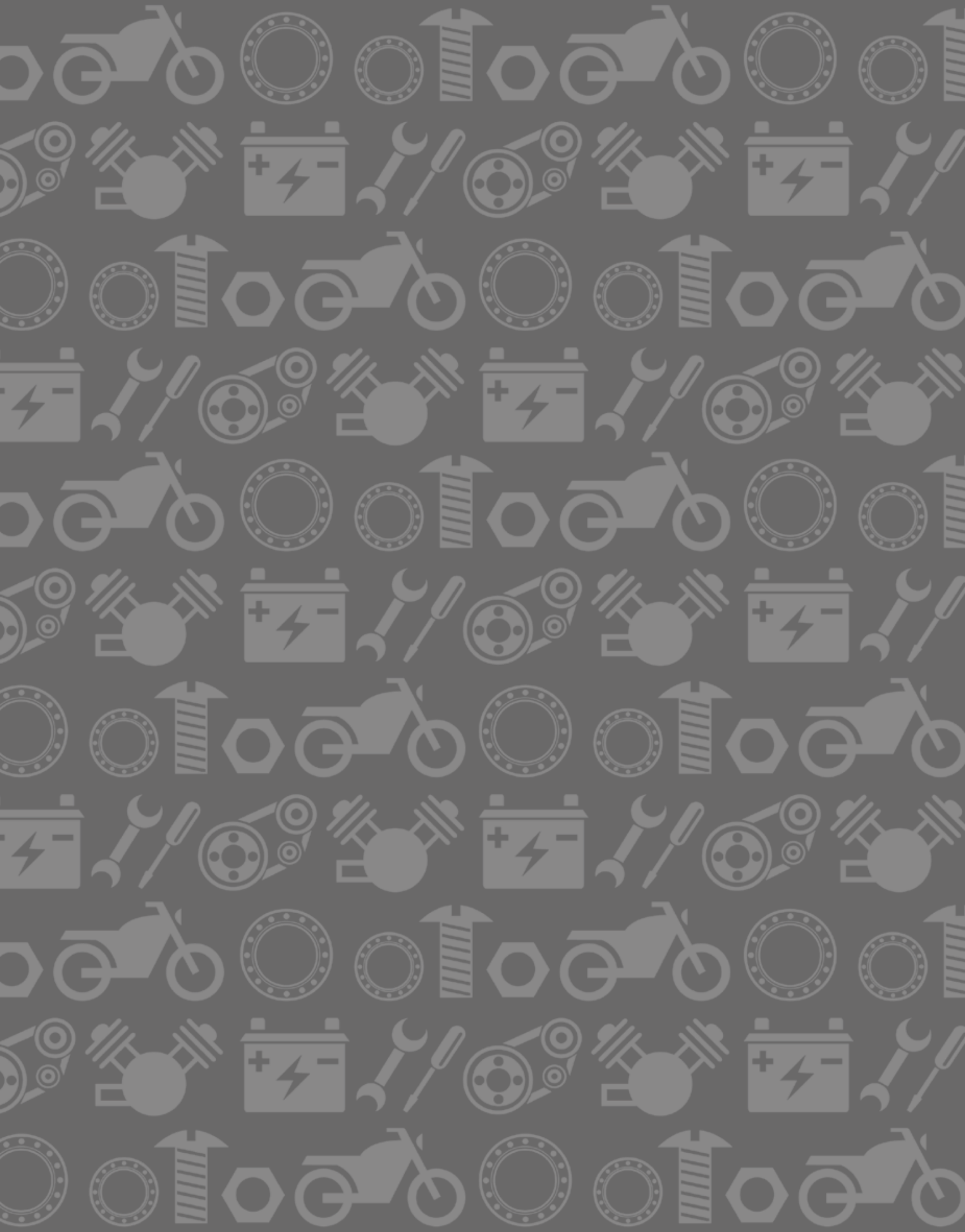

ALIMENTAZIONE

FUEL SYSTEM
SISTEMA DE COMBUSTIBLE
SYSTÈME D'ALIMENTATION

Pompes a Essence	*Bombas de Gasolina*	*Fuel Pumps*	**POMPE BENZINA**	**88**
Robinet - Pompe a Essence	*Grifos y Bombas de Gasolina*	*Fuel Taps*	**RUBINETTI BENZINA**	**103**
Accessoires Robinet - Pompe à Essence	*Accesorios Grifos de Gasolina*	*Fuel Taps Accessories*	**ACCESSORI RUBINETTI BENZINA**	**107**
Filtre Essence	*Filtros Gasolina*	*Fuel Filters*	**FILTRI CARBURANTE**	**108**
Réservoir de carburant	*Depositos de Gasolina*	*Fuel Tanks*	**SERBATOI BENZINA**	**110**
Accessoires Réservoir de Carburant	*Accesorios Depositos de Gasolina*	*Fuel Tanks Accessories*	**ACCESSORI SERBATOI BENZINA**	**111**
Tuyaux Essence	*Tubos Gasolina*	*Fuel Hose*	**TUBAZIONE BENZINA**	**113**
Accessoires Tuyaux Essence	*Accesorios Tubos Gasolina*	*Fuel Hose Accessories*	**ACCESSORI TUBAZIONE BENZINA**	**115**
Membrane de Carburateur	*Membrana Carburador*	*Carburetor Diaphragm*	**MEMBRANE CARBURATORE**	**116**
Accessoires Carburateur	*Accesorios Carburadores*	*Carburetor Accessories*	**ACCESSORI CARBURATORE**	**121**
Courroie de Mélangeur	*Correas Mezclador*	*Belts Mixer*	**CINGHIE MISCELATORE**	**122**



Modello *Model*	CC	Da *From*	A *To*	OEM	Codice RMS *RMS Code*	Note *Notes*
APRILIA						
Mojito Custom 2T Motore Piaggio	50	2004	2010	CM120901	**121660020**	
Atlantic	125	2003	2005	AP8176041	**121660020**	
Atlantic Eu3	125	2010	2012	CM120901	**121660020**	
Atlantic Eu3 125-250	125	2006	2008	AP8176041	**121660020**	
Mojito	125	2003	2008	AP8176041	**121660020**	
Rs Abs	125	2017	2017	640517	**121660060**	
Rs Replica Abs	125	2017	2018	640517	**121660060**	
Rs4	125	2011	2013	640517	**121660060**	
Rs4 Replica	125	2014	2016	640517	**121660060**	
Scarabeo	125	2003	2006	AP8176041	**121660020**	
Scarabeo Light	125	2007	2008	AP8176041	**121660020**	
Scarabeo Motore Piaggio Eu3	125	2006	2006	AP8176041	**121660020**	
Sport City	125	2004	2006	AP8176041	**121660020**	
Sport City Cube	125	2008	2010	CM120901	**121660020**	
Sport City Euro3	125	2006	2008	AP8176041	**121660020**	
Sport City Street	125	2012	2012	CM120901	**121660020**	
Sr Max	125	2011	2014	640519	**121660060**	
Tuono Abs	125	2017	2018	640517	**121660060**	
Atlantic Eu3 125-250	250	2006	2008	AP8176041	**121660020**	
Sport City Cube	250	2008	2012	858506	**121660060**	
Scarabeo Light	300	2009	2010	640517	**121660060**	
Sport City Street	300	2012	2012	858506	**121660060**	
Sr Max	300	2011	2014	640519	**121660060**	
Scarabeo Light 400-500	500	2006	2008	640314	**121660050**	
Etv Capo Nord - Rally	1000	2001	2003	AP8106629	**121660050**	
Etv Capo Nord Abs	1000	2004	2007	AP8106629	**121660050**	
Rst Futura	1000	2001	2003	AP8106888	**121660050**	
Rsv	1000	1998	1999	AP8106385	**121660050**	
Rsv R Tuono	1000	2002	2005	AP8106385	**121660050**	
Rsv Sp	1000	1999	2000	AP8106385	**121660050**	
Rsv, Rsv R	1000	2000	2002	AP8106385	**121660050**	
Sl Falco	1000	2000	2003	AP8106385	**121660050**	
BETA						
Quadra 50	50	1995	1999	-	**121660010**	
Tempo 50	50	1994	1999	-	**121660010**	
BMW						
F 650 650 Cs Scarver	650	2002	2005	16147723464	**121660110**	
F 650 650 Cs Scarver Abs	650	2002	2005	16147723464	**121660110**	
F 650 650 Gs	650	2000	2008	16147723464	**121660110**	
F 650 650 Gs Abs	650	2000	2008	16147723464	**121660110**	
F 650 650 Gs Dakar	650	2000	2008	16147723464	**121660110**	
F 650 650 Gs Dakar Abs	650	2002	2008	16147723464	**121660110**	
G 650 Gs	650	2011	2012	16147723464	**121660110**	
G 650 Gs Abs	650	2012	2016	16147723464	**121660110**	
G 650 Gs Sertäo	650	2012	2012	16147723464	**121660110**	
G 650 Gs Sertäo Abs	650	2012	2014	16147723464	**121660110**	
G 650 Xchallenge	650	2007	2010	16147723464	**121660110**	
G 650 Xchallenge Abs	650	2007	2010	16147723464	**121660110**	
G 650 Xcountry	650	2007	2010	16147723464	**121660110**	
G 650 Xcountry Abs	650	2007	2010	16147723464	**121660110**	
G 650 Xmoto	650	2007	2010	16147723464	**121660110**	
G 650 Xmoto Abs	650	2007	2010	16147723464	**121660110**	
K 75	750	1984	1988	-	**121660090**	
K 75 /2	750	1989	1990	-	**121660090**	
K 75 C	750	1985	1990	-	**121660090**	
K 75 Rt	750	1989	1993	-	**121660090**	
K 75 S	750	1985	1993	-	**121660090**	
K 75 S Abs	750	1985	1993	-	**121660090**	



Modello *Model*	**CC**	**Da** *From*	**A** *To*	**OEM**	**Codice RMS** *RMS Code*	**Note** *Notes*
R 850 Gs	850	1998	1999	-	**121660100**	
R 850 Gs Abs	850	1998	1999	-	**121660100**	
R 850 R Cast Wheel	850	1995	2002	-	**121660100**	
R 850 R Cast Wheel Abs	850	1998	2002	-	**121660100**	
R 850 R Comfort	850	2004	2006	-	**121660100**	
R 850 R Comfort Abs	850	2004	2006	-	**121660100**	
R 850 R Roadster	850	2003	2006	-	**121660100**	
R 850 R Roadster Abs	850	2003	2006	-	**121660100**	
R 850 R Spoked Wheel	850	1995	2002	-	**121660100**	
R 850 R Spoked Wheel Abs	850	1998	2002	-	**121660100**	
K 100	1000	1982	1988	-	**121660090**	
K 100 /2	1000	1987	1990	-	**121660090**	
K 100 /2 Abs	1000	1987	1990	-	**121660090**	
K 100 Lt	1000	1986	1991	-	**121660090**	
K 100 Lt Abs	1000	1986	1991	-	**121660090**	
K 100 Rs4V	1000	1989	1992	-	**121660090**	
K 100 Rs4V Abs	1000	1989	1992	-	**121660090**	
K 100 Rt	1000	1983	1989	-	**121660090**	
K 100 Rt Abs	1000	1983	1989	-	**121660090**	
K1 1000	1000	1988	1993	-	**121660090**	
K1 1000 Abs	1000	1988	1993	-	**121660090**	
K 1100 Lt	1100	1990	1993	-	**121660090**	
K 1100 Lt Abs	1100	1990	1993	-	**121660090**	
K 1100 Rs	1100	1992	1993	-	**121660090**	
K 1100 Rs Abs	1100	1992	1993	-	**121660090**	
R 1100 Gs	1100	1993	1999	-	**121660100**	
R 1100 Gs Abs	1100	1993	1999	-	**121660100**	
R 1100 R Cast Wheel	1100	1995	2001	-	**121660100**	
R 1100 R Cast Wheel Abs	1100	1995	2001	-	**121660100**	
R 1100 R Spoked Wheel	1100	1995	2001	-	**121660100**	
R 1100 R Spoked Wheel Abs	1100	1995	2001	-	**121660100**	
R 1100 Rs	1100	1992	2001	-	**121660100**	
R 1100 Rs Abs	1100	1998	2001	-	**121660100**	
R 1100 Rt Cast Wheel Abs	1100	1996	2001	-	**121660100**	
R 1100 Rt Spoked Wheel Abs	1100	1996	2001	-	**121660100**	
R 1150 Gs	1150	1999	2004	-	**121660100**	
R 1150 Gs Abs	1150	1999	2004	-	**121660100**	
R 1150 Rs Abs	1150	2002	2005	-	**121660100**	
R 1150 Rs Doppia Accensione	1150	2003	2005	-	**121660100**	
R 1150 Rs Einfachzündung	1150	2001	2002	-	**121660100**	
R 1150 Rt Abs	1150	2002	2005	-	**121660100**	
K 1200 Gt Abs	1200	2004	2008	16147680379	**121660110**	
K 1200 R 55 Inch Rim	1200	2005	2008	16147680379	**121660110**	
K 1200 R 55 Inch Rim Abs	1200	2005	2008	16147680379	**121660110**	
K 1200 R 60 Inch Rim	1200	2005	2008	16147680379	**121660110**	
K 1200 R 60 Inch Rim Abs	1200	2005	2008	16147680379	**121660110**	
K 1200 R Sport 55 Inch Rim	1200	2007	2008	16147680379	**121660110**	
K 1200 R Sport 55 Inch Rim Abs	1200	2007	2008	16147680379	**121660110**	
K 1200 R Sport 60 Inch Rim	1200	2007	2008	16147680379	**121660110**	
K 1200 R Sport 60 Inch Rim Abs	1200	2007	2008	16147680379	**121660110**	
K 1200 Rs 5 Inch Rim Abs	1200	2001	2005	-	**121660100**	
K 1200 Rs 55 Inch Rim Abs	1200	2001	2005	-	**121660100**	
K 1200 S Abs	1200	2005	2008	16147680379	**121660110**	
R 1200 Gs Adventure	1200	2006	2012	16147680379	**121660110**	
R 1200 Gs Adventure 90 Jahre Abs	1200	2013	2013	16147680379	**121660110**	
R 1200 Gs Adventure Abs	1200	2006	2013	16147680379	**121660110**	
R 1200 Gs Adventure Abs Triple Black	1200	2013	2013	16147680379	**121660110**	
R 1200 Gs Cast Wheel	1200	2004	2009	16147680379	**121660110**	



Modello *Model*	**CC**	**Da** *From*	**A** *To*	**OEM**	**Codice RMS** *RMS Code*	**Note** *Notes*
R 1200 Gs Cast Wheel Abs	1200	2004	2009	16147680379	**121660110**	
R 1200 Gs Spoked Wheel	1200	2004	2009	16147680379	**121660110**	
R 1200 Gs Spoked Wheel Abs	1200	2004	2009	16147680379	**121660110**	
R 1200 Hp2 Enduro	1200	2005	2008	16147680379	**121660110**	
R 1200 Hp2 Megamoto	1200	2007	2011	16147680379	**121660110**	
R 1200 Hp2 Sport	1200	2008	2011	16147680379	**121660110**	
R 1200 Hp2 Sport Abs	1200	2008	2011	16147680379	**121660110**	
R 1200 Rt 90 Jahre Abs	1200	2013	2014	16147680379	**121660110**	
R 1200 Rt Abs	1200	2005	2013	16147680379	**121660110**	
R 1200 S 55 Inch Rim	1200	2006	2008	16147680379	**121660110**	
R 1200 S 55 Inch Rim Abs	1200	2006	2008	16147680379	**121660110**	
R 1200 S 60 Inch Rim	1200	2006	2008	16147680379	**121660110**	
R 1200 S 60 Inch Rim Abs	1200	2006	2008	16147680379	**121660110**	
R 1200 St	1200	2005	2008	16147680379	**121660110**	
R 1200 St Abs	1200	2005	2008	16147680379	**121660110**	
K 1300 Gt Abs	1300	2009	2009	16147680379	**121660110**	
K 1300 Gt Exclusive Edition Abs	1300	2010	2011	16147680379	**121660110**	
K 1300 R 55 Inch Rim	1300	2009	2012	16147680379	**121660110**	
K 1300 R 55 Inch Rim Abs	1300	2009	2015	16147680379	**121660110**	
K 1300 R 60 Inch Rim	1300	2009	2012	16147680379	**121660110**	
K 1300 R 60 Inch Rim Abs	1300	2009	2015	16147680379	**121660110**	
K 1300 S Abs	1300	2009	2015	16147680379	**121660110**	
K 1300 S Motorsport Abs	1300	2014	2015	16147680379	**121660110**	
DERBI						
Gp1 Euro2	50	2005	2005	CM120901	**121660020**	
Gp1 Open Eu2	50	2006	2009	CM120901	**121660020**	
Gp1 Race Eu2	50	2005	2007	CM120901	**121660020**	
Gp1 Eu2	125	2006	2006	CM120901	**121660020**	
Gp1 Low Seat 125 Eu3	125	2007	2008	639861	**121660160**	
Rambla 125-250	125	2008	2009	CM120901	**121660020**	
Rambla 125-250 E3 2Ver	125	2008	2008	CM120901	**121660020**	
Gp1	250	2006	2007	CM120901	**121660020**	
Rambla 125-250	250	2008	2009	CM120901	**121660020**	
Rambla 125-250 E3 2Ver	250	2008	2008	CM120901	**121660020**	
Rambla	300	2010	2011	858506	**121660060**	
GARELLI						
City Four	125	2010	2010	GA09615	**121660060**	
City Four	125	2011	2011	GA12377IT	**121660060**	
Noi	125	2008	2011	GA09615	**121660060**	
Tiesse	125	2008	2009	GA09615	**121660060**	
Xo'	125	2009	2009	GA09615	**121660060**	
Xo'	125	2010	2012	GA12377IT	**121660060**	
City Four	150	2010	2010	GA09615	**121660060**	
City Four	150	2011	2011	GA12377IT	**121660060**	
Noi	150	2008	2011	GA09615	**121660060**	
Tiesse	150	2008	2009	GA09615	**121660060**	
Xo'	150	2009	2009	GA09615	**121660060**	
Xo'	150	2010	2012	GA12377IT	**121660060**	
Xo'	200	2012	2012	GA12377IT	**121660060**	
GILERA						
Dna	50	2000	2002	CM120901	**121660020**	
Dna	50	2005	2007	CM120901	**121660020**	
Dna Gp Experience	50	2003	2004	CM120901	**121660020**	
Runner	50	1997	2000	82592R	**121660010**	
Runner Poggiali	50	2002	2002	82592R	**121660010**	
Runner Purejet	50	2005	2007	CM120901	**121660020**	
Runner Purejet	50	2010	2011	CM120901	**121660020**	
Runner Purejet St	50	2008	2008	CM120901	**121660020**	



Modello *Model*	CC	Da *From*	A *To*	OEM	Codice RMS *RMS Code*	Note *Notes*
Runner Sp	50	2002	2004	82592R	**121660010**	
Runner Sp	50	2005	2007	CM120901	**121660020**	
Runner Sp	50	2010	2012	CM120901	**121660020**	
Runner Sp Special Edition	50	2007	2007	CM120901	**121660020**	
Runner Sp St & Simoncelli	50	2008	2009	CM120901	**121660020**	
Nexus Euro3	125	2007	2008	639861	**121660160**	
Nexus Euro3 Ie	125	2008	2010	640519	**121660060**	
Runner 4T St Euro3	125	2008	2010	639861	**121660160**	Fino a 07-2010 I *Till 07-2010*
Runner 4T St Euro3	125	2010	2016	CM120901	**121660020**	Da 07-2010 I *From 07-2010*
Runner Fx-Fxr 125-180	125	1997	2002	82592R	**121660010**	
Runner Vx	125	2005	2006	CM120901	**121660020**	
Runner Vx 4T Euro3	125	2006	2007	639861	**121660160**	
Runner Vx Race	125	2006	2006	CM120901	**121660020**	
Runner Vx Sc	125	2006	2007	CM120901	**121660020**	
Runner Vx-Vxr 125-200	125	2002	2004	CM120901	**121660020**	
Typhoon	125	1995	1998	82592R	**121660010**	
Typhoon X-Xr	125	1999	2000	82592R	**121660010**	
Runner Fx-Fxr 125-180	180	1997	2002	82592R	**121660010**	
Runner Vxr	200	2005	2006	CM120901	**121660020**	
Runner Vxr 4T St Euro3	200	2008	2010	639861	**121660160**	Fino a 07-2010 I *Till 07-2010*
Runner Vxr 4T St Euro3	200	2010	2011	CM120901	**121660020**	Da 07-2010 I *From 07-2010*
Runner Vxr Euro3	200	2007	2007	CM120901	**121660020**	Versione a depressione I *Vacuum version*
Runner Vxr Euro3	200	2007	2007	639861	**121660160**	Versione elettrica I *Eletric version*
Runner Vxr Race	200	2005	2006	CM120901	**121660020**	
Runner Vx-Vxr 125-200	200	2002	2004	CM120901	**121660020**	
Nexus Euro3	300	2008	2011	640519	**121660060**	
HARLEY DAVIDSON						
Xl 883 C Sportster Custom	883	2007	2010	75126-00A	**121660050**	
Xl 883 L Sportster Low	883	2007	2010	75126-00A	**121660050**	
Xl 883 L Sportster Super Low	883	2011	2014	75126-00A	**121660050**	
Xl 883 L Sportster Super Low Abs	883	2015	2019	75126-00A	**121660050**	
Xl 883 N Sportster Iron	883	2009	2014	75126-00A	**121660050**	
Xl 883 N Sportster Iron Abs	883	2014	2019	75126-00A	**121660050**	
Xl 883 R Sportster Roadster	883	2007	2014	75126-00A	**121660050**	
Xl 883 R Sportster Roadster Abs	883	2015	2015	75126-00A	**121660050**	
Xl 883 Sportster	883	2007	2009	75126-00A	**121660050**	
Xl 1200 C Sportster Custom	1200	2007	2014	61342-00A	**121660050**	
Xl 1200 C Sportster Custom Abs	1200	2015	2019	61342-00A	**121660050**	
Xl 1200 Ca Sportster Custom Limited Editi	1200	2013	2016	61342-00A	**121660050**	
Xl 1200 Cb Sportster Custom Limited Editi	1200	2013	2017	61342-00A	**121660050**	
Xl 1200 Cx Sportster Roadster Abs	1200	2016	2019	61342-00A	**121660050**	
Xl 1200 L Sportster Low	1200	2007	2009	61342-00A	**121660050**	
Xl 1200 N Sportster Nightster	1200	2008	2012	61342-00A	**121660050**	
Xl 1200 Ns Sportster Iron Abs	1200	2019	2019	61342-00A	**121660050**	
Xl 1200 R Sportster Roadster	1200	2007	2008	61342-00A	**121660050**	
Xl 1200 T Sportster Superlow Abs	1200	2014	2019	61342-00A	**121660050**	
Xl 1200 V Sportster Seventy-Two	1200	2013	2014	61342-00A	**121660050**	
Xl 1200 V Sportster Seventy-Two Abs	1200	2015	2016	61342-00A	**121660050**	
Xl 1200 X Sportster Forty Eight	1200	2010	2014	61342-00A	**121660050**	
Xl 1200 X Sportster Forty Eight Abs	1200	2015	2019	61342-00A	**121660050**	
Xl 1200 X Sportster Forty Eight Special A	1200	2019	2019	61342-00A	**121660050**	
Xl 1200 Xanx Sportster Forty Eight Aniver	1200	2018	2018	61342-00A	**121660050**	
HONDA						
Sh 125 A I Abs	125	2013	2015	16700-K01-D02	**121660150**	
Sh 125 Ad I Abs	125	2013	2019	16700-K01-D02	**121660150**	
Sh 125 Anc I Mode	125	2014	2014	16730-KTF-640	**121660080**	
Sh 125 Anc I Mode	125	2015	2019	16700-K01-D02	**121660150**	
Sh 125 D I	125	2009	2009	16730-KTF-640	**121660080**	



POMPE BENZINA

FUEL PUMPS

Modello *Model*	**CC**	**Da** *From*	**A** *To*	**OEM**	**Codice RMS** *RMS Code*	**Note** *Notes*
Sh 125 I	125	2005	2012	16730-KTF-640	**121660080**	
Sh 125 I	125	2013	2013	16700-K01-D02	**121660150**	
Sh 125 I	125	2016	2016	16700-K01-D02	**121660150**	
Sh 150 A I Abs	150	2013	2016	16700-K01-D02	**121660150**	
Sh 150 Ad I Abs	150	2017	2019	16700-K01-D02	**121660150**	
Sh 150 D I	150	2009	2011	16730-KTF-640	**121660080**	
Sh 150 I	150	2005	2008	16730-KTF-640	**121660080**	
Sh 300 A I Abs	300	2007	2015	16730-KTW-902	**121660080**	
Sh 300 I	300	2008	2010	16730-KTW-902	**121660080**	
Nc 700 D Integra Dct Abs	700	2012	2012	16700-MGS-D33	**121660070**	
Nc 700 D Integra Dct Abs	700	2012	2013	16700-MGS-D33	**121660070**	
Nc 700 S	700	2012	2014	16700-MGS-D33	**121660070**	
Nc 700 Sa Abs	700	2012	2014	16700-MGS-D33	**121660070**	
Nc 700 Sd Dct Abs	700	2012	2014	16700-MGS-D33	**121660070**	
Nc 700 X	700	2012	2014	16700-MGS-D33	**121660070**	
Nc 700 Xa Abs	700	2012	2014	16700-MGS-D33	**121660070**	
Nc 700 Xd Dct Abs	700	2012	2014	16700-MGS-D33	**121660070**	
Nc 700 Xd Dct Abs	700	2013	2014	16700-MGS-D33	**121660070**	
Nc 750 D Integra Dct Abs	750	2014	2019	16700-MGS-D33	**121660070**	
Nc 750 J Nm4 Vultus Dct Abs	750	2014	2017	16700-MGS-D33	**121660070**	
Nc 750 Sa Abs	750	2014	2019	16700-MGS-D33	**121660070**	
Nc 750 Sd Dct Abs	750	2014	2019	16700-MGS-D33	**121660070**	
Nc 750 Xa Abs	750	2014	2019	16700-MGS-D33	**121660070**	
Nc 750 Xd Dct Abs	750	2014	2019	16700-MGS-D33	**121660070**	
HUSQVARNA						
Te-Sms	630	2010	2011	8000H1184	**121660060**	
KAWASAKI						
Er-6F A6F-A8F	650	2006	2008	490400026	**121660080**	
Er-6F Abs B6F-B8F	650	2006	2008	490400026	**121660080**	
Er-6F Abs D9F-Daf-Dbf	650	2009	2011	490400026	**121660080**	
Er-6F C9F-Caf-Cbf	650	2009	2011	490400026	**121660080**	
Er-6N A6S-A8F	650	2006	2008	490400026	**121660080**	
Er-6N Abs B6F-B8F	650	2006	2008	490400026	**121660080**	
Er-6N Abs D9F-Daf-Dbf	650	2009	2011	490400026	**121660080**	
Er-6N C9F-Caf-Cbf	650	2009	2011	490400026	**121660080**	
Kle Versys A7F-A8F-A9F	650	2007	2009	490400026	**121660080**	
Kle Versys Abs B7F-B8F-B9F	650	2007	2009	490400026	**121660080**	
Kle Versys Abs Daf	650	2010	2010	490400026	**121660080**	
Kle Versys Abs Dbf-Dcf-Ddf-Def	650	2011	2014	490400026	**121660080**	
Kle Versys Caf	650	2010	2010	490400026	**121660080**	
Kle Versys Cbf-Ccf-Cdf-Cef	650	2011	2014	490400026	**121660080**	
Kvf 4X4 Eps Gcf-Gcs-Gdf	750	2012	2013	490400033	**121660070**	
Kvf 4X4 Eps Gcf-Gcs-Gdf	750	2012	2013	490400717	**121660070**	
Kvf 4X4 Eps Hcs-Hdf Camouflage	750	2012	2013	490400033	**121660070**	
Kvf 4X4 Eps Hcs-Hdf Camouflage	750	2012	2013	490400717	**121660070**	
Kvf 4X4 Lcf-Lcs	750	2012	2012	490400033	**121660070**	
Kvf 4X4I Brute Force D8F-Dbf	750	2008	2011	490400033	**121660070**	
Kvf Brute Force 4X4I Eps Camo Hff-Hkf	750	2015	2019	490400717	**121660070**	
Kvf Brute Force 4X4I Eps Gef	750	2014	2014	490400717	**121660070**	
Kvf Brute Force 4X4I Eps Gff-Ggf-Ghf-Gjf	750	2015	2018	490400717	**121660070**	
Kvf Brute Force 4X4I Eps Gkf	750	2019	2019	490400717	**121660070**	
Kvf Brute Force 4X4I Eps Hef	750	2014	2014	490400717	**121660070**	
Z750 J1H-J2H	750	2004	2005	490401082	**121660110**	
Z750 J6F	750	2006	2006	490400009	**121660110**	
Z750S K1H	750	2005	2005	490400009	**121660110**	
Z750S K6F	750	2006	2006	490400009	**121660110**	
Z1000 A1H-A3H	1000	2003	2005	490401082	**121660110**	
Z1000 A6F	1000	2006	2006	490400009	**121660110**	



Modello *Model*	CC	Da *From*	A *To*	OEM	Codice RMS *RMS Code*	Note *Notes*
KYMCO						
Agility 2T R16	50	2010	2010	00116011	**121660120**	
Agility 2T R16	50	2012	2012	00116011	**121660120**	
Agility 4T R16	50	2008	2009	00116011	**121660120**	
Agility 4T R16	50	2012	2012	00116011	**121660120**	
B&W	50	2002	2002	00165200	**121660140**	
Super 8	50	2007	2007	00116011	**121660120**	
Super 8 2T	50	2009	2009	00116011	**121660120**	
Super 8 2T	50	2013	2013	00116011	**121660120**	
Super 8 4T	50	2009	2009	00116011	**121660120**	
Super 8 4T	50	2013	2013	00116011	**121660120**	
Agility Plus	125	2014	2014	00116262	**121660130**	
Agility R16	125	2008	2009	00116011	**121660120**	
Agility R16	125	2012	2012	00116011	**121660120**	
B&W 125-150	125	2000	2000	00165200	**121660140**	
B&W 125-150 Euro2	125	2003	2004	00165200	**121660140**	
Dink 125 Euro3	125	2006	2007	00165200	**121660140**	
G-Dink	125	2012	2012	00117309	**121660080**	
Grand Dink 125-150	125	2001	2002	00165200	**121660140**	
Grand Dink 125-150 Euro2	125	2003	2004	00165200	**121660140**	
K-Pipe	125	2012	2013	00116011	**121660120**	
Movie 125 Euro3	125	2006	2007	00165200	**121660140**	
Movie Xl 125-150	125	2001	2001	00165200	**121660140**	
Movie Xl 125-150 Euro2	125	2003	2004	00165200	**121660140**	
People Gti	125	2010	2010	00117309	**121660080**	
People Gti	125	2014	2014	00117309	**121660080**	
People Gti E4 I	125	2016	2016	00117309	**121660080**	
Super 8	125	2008	2009	00116011	**121660120**	
Agility R16	150	2008	2009	00116011	**121660120**	
Movie 150 Euro3	150	2006	2007	00165200	**121660140**	
People Gti	200	2010	2010	00117309	**121660080**	
People Gti	200	2014	2014	00117309	**121660080**	
B&W	250	2000	2000	00165200	**121660140**	
B&W Euro2	250	2003	2003	00165200	**121660140**	
Grand Dink	250	2001	2002	00165200	**121660140**	
Grand Dink Euro2	250	2003	2004	00165200	**121660140**	
People Lc	250	2003	2004	00165200	**121660140**	
People S	250	2006	2006	00165200	**121660140**	
X Citing	250	2005	2005	00165200	**121660140**	
Yup	250	2003	2003	00165200	**121660140**	
G-Dink	300	2012	2012	00117309	**121660080**	
G-Dink I Abs E4	300	2017	2017	00117309	**121660080**	
People Gti	300	2010	2011	00117309	**121660080**	
People Gti	300	2014	2014	00117309	**121660080**	
People Gti Abs	300	2012	2012	00117309	**121660080**	
People Gti Abs	300	2014	2014	00117309	**121660080**	
People Gti Abs E4	300	2016	2016	00117309	**121660080**	
MALAGUTI						
Ciak	50	1999	2000	09305700	**121660010**	
Ciak Master Euro 2	50	2006	2006	09305700	**121660010**	
Ciak Mono Euro 2	50	2003	2003	09305700	**121660010**	
Ciak Mono Euro 2 2.3	50	2003	2003	09305700	**121660010**	
Ciak Td	50	2000	2001	09305700	**121660010**	
Blog	125	2009	2011	09310400	**121660060**	
Centro Ie	125	2008	2009	09310400	**121660060**	
Centro SI	125	2009	2011	09310400	**121660060**	
Ciak Master	125	2004	2004	09305700	**121660010**	
Blog	160	2009	2011	09310400	**121660060**	



Modello *Model*	**CC**	**Da** *From*	**A** *To*	**OEM**	**Codice RMS** *RMS Code*	**Note** *Notes*
Centro Ie	160	2008	2009	09310400	**121660060**	
Centro Sl	160	2009	2011	09310400	**121660060**	
Password Eu3	250	2007	2008	09310400	**121660060**	
PEUGEOT						
Geopolis 250 Executive Abs	250	2007	2009	767376	**121660060**	
Geopolis 250 Premium	250	2006	2011	767376	**121660060**	
Geopolis 250 Premium Rs	250	2007	2011	767376	**121660060**	
Geopolis 250 Urban Abs	250	2010	2012	767376	**121660060**	
Geopolis 400 Executive Abs	400	2007	2009	772716	**121660050**	
Geopolis 400 Premium	400	2007	2012	772716	**121660050**	
Geopolis 400 Premium Rs	400	2008	2011	772716	**121660050**	
Geopolis 400 Urban Abs	400	2010	2012	772716	**121660050**	
Satelis 400 2 Premium Abs Sbc	400	2014	2017	772716	**121660050**	
Satelis 400 2 Premium Rs Abs Sbc	400	2014	2017	772716	**121660050**	
Satelis 400 2 Rs Sbc	400	2018	2018	772716	**121660050**	
Satelis 400 Executive Abs	400	2007	2009	772716	**121660050**	
Satelis 400 Premium	400	2007	2012	772716	**121660050**	
Satelis 400 Premium Rs	400	2008	2011	772716	**121660050**	
Satelis 400 Urban Abs	400	2010	2011	772716	**121660050**	
Satelis 500 Executive Abs	500	2007	2009	772716	**121660050**	
Satelis 500 Premium	500	2006	2012	772716	**121660050**	
Satelis 500 Premium Rs	500	2008	2011	772716	**121660050**	
Satelis 500 Urban Abs	500	2010	2011	772716	**121660050**	
PIAGGIO						
Fly 4T 2V	50	2013	2015	CM120901	**121660020**	
Fly 4T 2V 25-30Km-H	50	2012	2017	CM120901	**121660020**	
Fly 4T 4V	50	2012	2013	CM120901	**121660020**	
Nrg Power Dd	50	2005	2006	CM120901	**121660020**	
Nrg Power Dd	50	2007	2017	CM120903	**121660020**	
Nrg Power Dd Serie Speciale	50	2007	2012	CM120901	**121660020**	
Nrg Power Dt	50	2006	2006	CM120901	**121660020**	
Nrg Power Dt	50	2007	2015	CM120903	**121660020**	
Nrg Power Dt Serie Speciale	50	2007	2008	CM120901	**121660020**	
Nrg Power H2O E4 No Abs	50	2018	2018	CM120903	**121660020**	
Nrg Power Purejet	50	2004	2011	CM120901	**121660020**	
Nrg Purejet	50	2010	2010	CM120901	**121660020**	
Vespa Primavera 4T 3V 25 Km/H E4	50	2017	2018	6405162	**121660060**	
Vespa Primavera 4T-3V Noabs E4	50	2017	2018	6405162	**121660060**	
Vespa Sprint 4T 3V 25 Km/H E4	50	2017	2018	6405162	**121660060**	
Vespa Sprint 4T-3V E4	50	2017	2018	6405162	**121660060**	
Beverly	125	2001	2003	CM120901	**121660020**	
Beverly Euro 3	125	2007	2008	639861	**121660160**	
Beverly Euro 3 Mic	125	2007	2007	639861	**121660160**	
Beverly Euro 3 Sport	125	2007	2008	639861	**121660160**	
Beverly Rst	125	2004	2005	CM120901	**121660020**	
Beverly Rst	125	2005	2007	CM120901	**121660020**	
Beverly Tourer Euro3	125	2007	2010	639861	**121660160**	
Carnaby	125	2007	2010	639861	**121660160**	
Hexagon	125	1994	1997	82592R	**121660010**	
Hexagon Gtx	125	2000	2000	CM120901	**121660020**	
Hexagon Lx4	125	1998	1999	CM120901	**121660020**	
Hexagon Lx-Lxt	125	1998	1999	CM120901	**121660020**	
Liberty 4T Euro3	125	2006	2008	639861	**121660160**	
Liberty 4T Sport Euro3	125	2006	2008	639861	**121660160**	
Mp3	125	2006	2008	CM120901	**121660020**	Versione a depressione | *Vacuum version*
Mp3	125	2006	2008	639861	**121660160**	Versione elettrica | *Eletric version*
Super Hexagon Gtx 12	125	2001	2002	CM120901	**121660020**	
Vespa Granturismo	125	2003	2005	CM120901	**121660020**	



Modello *Model*	**CC**	**Da** *From*	**A** *To*	**OEM**	**Codice RMS** *RMS Code*	**Note** *Notes*
Vespa Granturismo	125	2006	2007	CM120901	**121660020**	
Vespa Granturismo Euro 3	125	2006	2007	CM120901	**121660020**	
Vespa Gts 4T Ie Super	125	2009	2016	643034	**121660060**	
Vespa Gts Euro3	125	2007	2012	639861	**121660160**	
Vespa Gtv	125	2006	2008	CM120901	**121660020**	Versione a depressione | *Vacuum version*
Vespa Gtv	125	2006	2008	639861	**121660160**	Versione elettrica | *Eletric version*
Vespa Gtv 4T Navy Euro3	125	2008	2008	639861	**121660160**	
Vespa Lx 4T FI	125	2009	2009	639861	**121660160**	
Vespa Lx Euro 3	125	2006	2008	639861	**121660160**	
Vespa Lx Primavera 4T 3V Ie	125	2013	2017	6405162	**121660060**	
Vespa Lxv 4T Navy Euro3	125	2007	2008	639861	**121660160**	
Vespa Primavera 4T 3V E4 Iget Abs	125	2016	2018	6405162	**121660060**	
Vespa S 4T Euro 3	125	2007	2008	639861	**121660160**	
Vespa S 4T Ie & College	125	2009	2011	639861	**121660160**	
Vespa Sprint 4T 3V Ie	125	2014	2015	6405162	**121660060**	
Vespa Sprint Iget 4T 3V Abs (Emea)	125	2016	2018	6405162	**121660060**	
X Evo	125	2007	2016	CM120901	**121660020**	Versione a depressione | *Vacuum version*
X Evo	125	2007	2016	639861	**121660160**	Versione elettrica | *Eletric version*
X7 Euro 3	125	2008	2008	639861	**121660160**	
X8	125	2004	2006	CM120901	**121660020**	
X8 Premium Euro 2	125	2006	2006	CM120901	**121660020**	
X8 Premium Euro 3	125	2006	2007	CM120901	**121660020**	
X8 Street Euro 2	125	2006	2007	CM120901	**121660020**	
X9	125	2001	2002	CM120901	**121660020**	
X9 Evolution	125	2003	2003	CM120901	**121660020**	
X9 Evolution	125	2005	2006	CM120901	**121660020**	
X9 Evolution Euro3	125	2007	2007	639861	**121660160**	
Liberty 4T Euro3	150	2008	2008	639861	**121660160**	
Liberty 4T Sport Euro3	150	2008	2008	639861	**121660160**	
Vespa Gts Super Ie 4T 3V Au,Ex,Jp,Ri,T,V	150	2014	2015	643034	**121660060**	
Vespa Lx 4T FI	150	2009	2009	639861	**121660160**	
Vespa Lx Euro 3	150	2006	2008	639861	**121660160**	
Vespa Primavera 4T 3V Iget Abs (Emea)	150	2016	2018	6405162	**121660060**	
Vespa Primavera 4T-3V	150	2013	2016	6405162	**121660060**	
Vespa S 4T	150	2008	2009	639861	**121660160**	
Vespa Sprint 4T 3V Ie	150	2015	2015	6405162	**121660060**	
Vespa Sprint Sport 4T 3V Iget Abs	150	2016	2018	6405162	**121660060**	
X8 Street Euro 2	150	2006	2008	CM120901	**121660020**	
X9 Amalfi	180	2000	2003	CM120901	**121660020**	
Carnaby	200	2007	2008	639861	**121660160**	
Liberty 4T Euro3	200	2006	2008	639861	**121660160**	
Liberty 4T Sport Euro3	200	2006	2007	639861	**121660160**	
Vespa Granturismo	200	2006	2007	CM120901	**121660020**	
X8	200	2005	2007	CM120901	**121660020**	
X9	200	2002	2003	CM120901	**121660020**	
X9 Evolution	200	2003	2003	CM120901	**121660020**	
Beverly	250	2005	2007	CM120901	**121660020**	
Beverly Rst	250	2004	2005	CM120901	**121660020**	
Mp3	250	2006	2008	639150	**121660060**	
X8 Euro3	250	2005	2008	639150	**121660060**	
X9 Evolution	250	2004	2004	CM120901	**121660020**	
X9 Evolution	250	2006	2006	CM120901	**121660020**	
Vespa Gts - Gts Super Ie Abs E4 (Emea)	300	2016	2018	1D001804	**121660060**	
Vespa Gts - Gts Super Ie Abs E4 (Emea)	300	2016	2018	643034	**121660060**	
Vespa Gts Ie & Touring	300	2012	2016	643034	**121660060**	
Vespa Gts Ie Abs E4 (Emea)	300	2016	2017	1D001804	**121660060**	
Vespa Gts Ie Touring	300	2011	2012	640516	**121660060**	
Vespa Gts Super	300	2008	2016	640516	**121660060**	



Modello *Model*	**CC**	**Da** *From*	**A** *To*	**OEM**	**Codice RMS** *RMS Code*	**Note** *Notes*
Vespa Gts Super	300	2008	2016	643034	**121660060**	
Vespa Gts Super Sport	300	2010	2013	640516	**121660060**	
Vespa Gtv 4T 4V Ie	300	2010	2013	640516	**121660060**	
Vespa Gtv Sei Giorni Ie E4 Abs (Emea)	300	2017	2017	1D001804	**121660060**	
Vespa Gtv Via Montenapoleone	300	2010	2010	640516	**121660060**	
Beverly Tourer Euro3	400	2008	2010	641134	**121660050**	
Ape Car - Max Diesel	420	1986	1996	829369	**121660170**	
Ape Poker Benzina	420	1993	1993	829368	**121660180**	
Ape Poker Diesel	420	1993	1997	829369	**121660170**	
Ape Tm P703-P703V Diesel	420	1987	2004	829369	**121660170**	
Beverly Cruiser	500	2007	2012	641134	**121660050**	
Quargo	500	2005	2017	850055	**121660200**	
Quargo Diesel	750	2004	2006	850055	**121660200**	
Porter Diesel 1200-1400	1200	1995	2000	493505	**121660190**	
Porter Diesel 1200-1400	1400	1995	2000	493505	**121660190**	
Porter Pick Diesel	1400	1998	2005	850509	**121660190**	
Porter Van Diesel	1400	1998	2005	850509	**121660190**	
SUZUKI						
Uh125 Burgman K7-L0	125	2007	2010	15100-03H11-000	**121660040**	
Uh125 Burgman L1	125	2011	2012	15100-03H11-000	**121660040**	
Uh125 Burgman L3	125	2013	2013	15100-03H30-000	**121660040**	
Ux Sixteen K8-L0	125	2008	2010	15100-20H01-000	**121660040**	
Ux Sixteen L1	125	2011	2011	15100-20H01-000	**121660040**	
Ux Sixteen K8-L0	150	2008	2010	15100-20H01-000	**121660040**	
Ux Sixteen L1	150	2011	2011	15100-20H01-000	**121660040**	
Uh200 Burgman K7-L0	200	2007	2010	15100-03H11-000	**121660040**	
Uh200 Burgman L1	200	2011	2012	15100-03H11-000	**121660040**	
Uh200 Burgman L3	200	2013	2013	15100-03H30-000	**121660040**	
An250 Burgman K3-K6	250	2003	2006	15110-14G00-000	**121660030**	
An400 Burgman K3-K6	400	2003	2006	15110-14G00-000	**121660030**	
An400 Burgman K7-L0	400	2007	2010	15100-05H10-000	**121660070**	
An400 Burgman L1	400	2011	2011	15100-05H10-000	**121660070**	
An400 Burgman L2	400	2012	2012	15100-05H10-000	**121660070**	
An400 Burgman L3	400	2013	2013	15100-05H10-000	**121660070**	
An400 Burgman L4	400	2014	2014	15100-05H10-000	**121660070**	
An400 Burgman L5	400	2015	2015	15100-05H10-000	**121660070**	
An400 Burgman L6	400	2016	2016	15100-05H11-000	**121660070**	
An400 Burgman L8	400	2018	2018	15100-05H11-000	**121660070**	
Gsx-R600 L5	600	2015	2015	15100-14J01-000	**121660070**	
Gsx-R600 L6	600	2016	2016	15100-14J01-000	**121660070**	
Gsx-R600 L7	600	2017	2017	15100-14J01-000	**121660070**	
Gsx-R600L1	600	2011	2011	15100-14J00-000	**121660070**	
Gsx-R600L2	600	2012	2012	15100-14J00-000	**121660070**	
Gsx-R600L3	600	2013	2013	15100-14J00-000	**121660070**	
Gsx-R600L4	600	2014	2014	15100-14J00-000	**121660070**	
An650 Burgman K3-K5	650	2003	2005	15110-10G00-000	**121660110**	
An650 Burgman K6-L0	650	2006	2010	15110-10G00-000	**121660110**	
An650 Burgman L1	650	2011	2011	15110-10G00-000	**121660110**	
An650 Burgman L2	650	2012	2012	15110-10G00-000	**121660110**	
An650 Burgman L3	650	2013	2013	15110-10G00-000	**121660110**	
An650 Burgman L4	650	2014	2014	15110-10G00-000	**121660110**	
An650 Burgman L6	650	2016	2016	15110-10G00-000	**121660110**	
An650Z Burgman	650	2018	2018	15110-10G00-000	**121660110**	
Gsx-R750 L1	750	2011	2011	15100-14J00-000	**121660070**	
Gsx-R750 L2	750	2012	2012	15100-14J00-000	**121660070**	
Gsx-R750 L3	750	2013	2013	15100-14J00-000	**121660070**	
Gsx-R750 L4	750	2014	2014	15100-14J00-000	**121660070**	
Gsx-R750 L5	750	2015	2015	15100-14J01-000	**121660070**	



Modello *Model*	CC	Da *From*	A *To*	OEM	Codice RMS *RMS Code*	Note *Notes*
Gsx-R750 L6	750	2016	2016	15100-14J01-000	**121660070**	
Gsx-R750 L7	750	2017	2017	15100-14J01-000	**121660070**	
Gsx-R750Z(Uf) L4	750	2014	2014	15100-14J00-000	**121660070**	
Gsx-R1000 L2	1000	2012	2012	15100-47H10-000	**121660070**	
Gsx-R1000 L3	1000	2013	2013	15100-47H10-000	**121660070**	
Gsx-R1000 L4	1000	2014	2014	15100-47H10-000	**121660070**	
Gsx-R1000Z L4	1000	2014	2014	15100-47H10-000	**121660070**	
SYM						
Hd Euro3 I	200	2007	2007	16700HGC000	**121660110**	
Hd Euro3 I	200	2007	2007	16710H5B000	**121660110**	
Hd Evo Euro3 I	200	2007	2007	16700HGC000	**121660110**	
Hd Evo Euro3 I	200	2007	2007	16710H5B000	**121660110**	
Hd Evo I Euro3	200	2010	2012	16700HGC000	**121660110**	
Hd Evo I Euro3	200	2010	2012	16710H5B000	**121660110**	
Hd Evo I Tamburo Euro3	200	2008	2009	16700HGC010	**121660110**	
Hd Evo I Tamburo Euro3	200	2008	2009	16710H5B000	**121660110**	
Joyride I Euro3	200	2007	2009	16710H5B000	**121660110**	
YAMAHA						
Yp125R X-Max	125	2008	2012	5RU139070200	**121660040**	
Yp250R X-Max	250	2007	2012	5RU139070200	**121660040**	
Yp400 Majesty	400	2004	2011	5RU139070200	**121660040**	
Yp400 Majesty Abs	400	2008	2011	5RU139070200	**121660040**	
Xp T-Max	500	2001	2003	3YX139070100	**121660160**	
Xp T-Max	500	2008	2011	4B5139070000	**121660040**	
Xp T-Max Abs	500	2008	2011	4B5139070000	**121660040**	
Xp T-Max Abs Sv	500	2010	2011	4B5139070000	**121660040**	
Xp T-Max Sv	500	2011	2011	4B5139070000	**121660040**	
Xp T-Max White Max	500	2010	2010	4B5139070000	**121660040**	
Xp T-Max	530	2012	2016	59C139070000	**121660040**	
Xp T-Max Abs	530	2012	2016	59C139070000	**121660040**	
Xp T-Max Sp	530	2015	2015	59C139070000	**121660040**	
Xp T-Max Sp Abs	530	2015	2016	59C139070000	**121660040**	
Xj N	600	1995	1997	3YX139070100	**121660160**	
Xj N	600	1999	2001	3YX139070100	**121660160**	
Xj S Diversion	600	1996	2002	3YX139070100	**121660160**	
Xvs A Drag Star Classic	650	1998	2002	3YX139070100	**121660160**	
Xvs Drag Star	650	1997	2002	3YX139070100	**121660160**	
Bt Bulldog	1100	2002	2004	3YX139070100	**121660160**	
Xvs A Drag Star Classic	1100	2000	2003	3YX139070100	**121660160**	
Xvs Drag Star	1100	1999	2002	3YX139070100	**121660160**	



POMPE BENZINA

FUEL PUMPS

121660010

Pompa a depressione | *Vacuum fuel pump*

BETA
GILERA: R.O. 82592R
MALAGUTI: R.O. 09305700
PIAGGIO: R.O. 82592R



121660020

Pompa a depressione | *Vacuum fuel pump*

APRILIA: R.O. CM120901
GILERA: R.O. CM120901
PIAGGIO: R.O. CM120901



121660130 NEW

Pompa a depressione | *Vacuum fuel pump*

KYMCO: R.O. 00116262 - 16700-LBC9-900



121660140 NEW

Pompa a depressione | *Vacuum fuel pump*

KYMCO: R.O. 00116262 - 16700-LBC9-900



121660170 NEW

Pompa gasolio | *Diesel pump*

PIAGGIO: R.O. 829369



121660180 NEW

Pompa benzina | *Fuel pump*

PIAGGIO: R.O. 829368



121660190 NEW

Pompa gasolio | *Diesel pump*

PIAGGIO: R.O. 850509



121660200 NEW

Pompa gasolio | *Diesel pump*

PIAGGIO: R.O.850055





121660030

Pompa benzina elettrica a immersione | *Submersible electric fuel pump*
Pressione di esercizio 3 Bar | *Working pressure 3 Bar*
Portata 100 l/h | *Flow 100 l/h*

SUZUKI: R.O. 15110-14G00-000



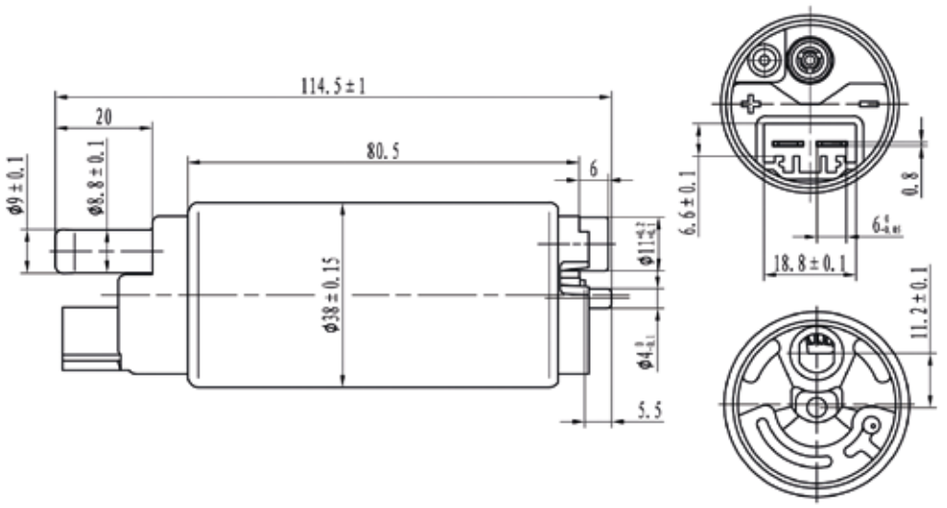

121660040

Pompa benzina elettrica a immersione | *Submersible electric fuel pump*
Pressione di esercizio 3 Bar | *Working pressure 3 Bar*
Portata 35 l/h | *Flow 35 l/h*

SUZUKI: R.O. 15100-03H11-000 • 15100-03H30-000 • 15100-20H01-000
YAMAHA: R.O. 4B5139070000 • 5RU139070200 • 59C139070000



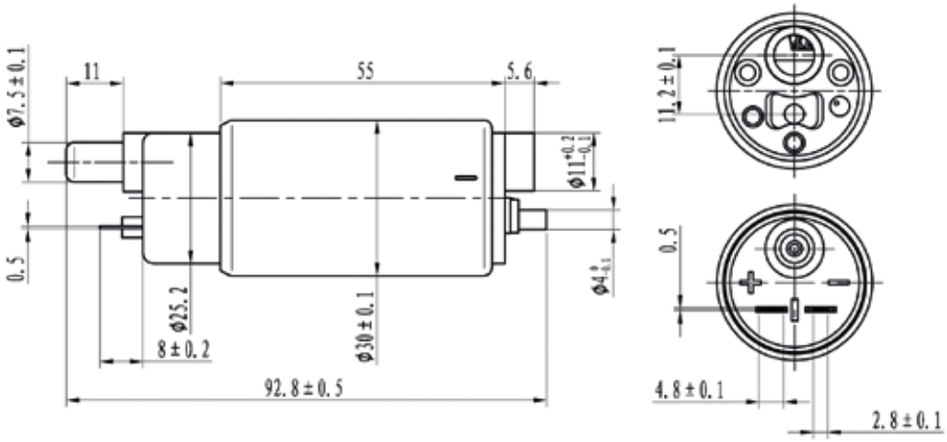

121660050

Pompa benzina elettrica a immersione | *Submersible electric fuel pump*
Pressione di esercizio 3 Bar | *Working pressure 3 Bar*
Portata 100 l/h | *Flow 100 l/h*

APRILIA: 640314 • AP8106629 • AP8106888 • AP8106385
HARLEY DAVIDSON: 75126-00A • 61342-00A
PEUGEOT: 641134 • 772716



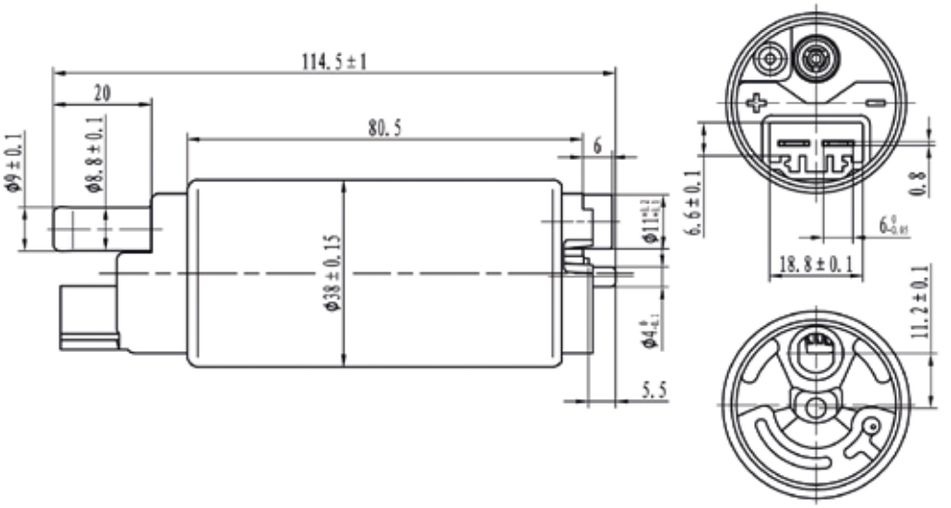



121660060

Pompa benzina elettrica a immersione | *Submersible electric fuel pump*
Senza cablaggi | *No wires*
Pressione di esercizio 3 Bar | *Working pressure 3 Bar*
Portata 35 l/h | *Flow 35 l/h*

APRILIA: R.O. 640517 • 640519 • 858506
DERBI: R.O. 639861 • 858506
GARELLI: R.O. GA09615 • GA12377IT
GILERA: R.O. 640519
HUSQVARNA: R.O. 8000H1184
MALAGUTI: R.O. 09310400
PEUGEOT: R.O. 767376
PIAGGIO: R.O. 63910 • 643034 • 6405162 • 1D001804



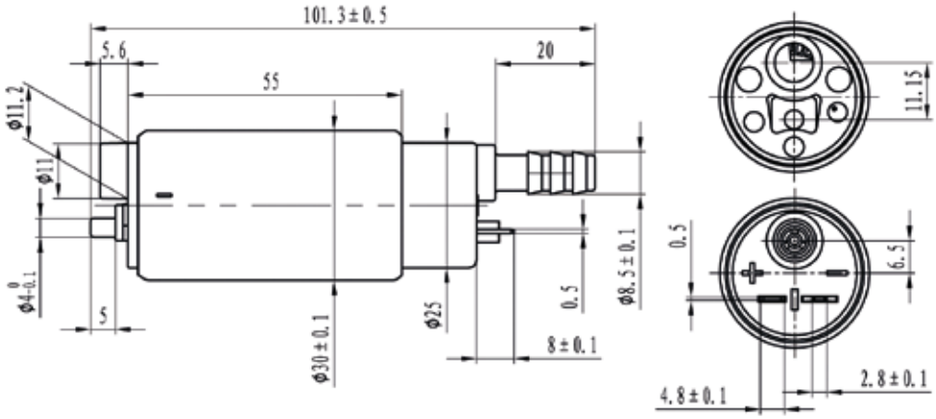

121660070

Pompa benzina elettrica a immersione | *Submersible electric fuel pump*
Pressione di esercizio 3 Bar | *Working pressure 3 Bar*
Portata 60 l/h | *Flow 60 l/h*

HONDA: R.O. 16700-MGS-D33
KAWASAKI: R.O. 490400717 • 490400033
SUZUKI: R.O. 15100-05H10-000 • 15100-05H11-000 • 15100-14J00-000 • 15100-14J01-000 • 15100-47H10-000



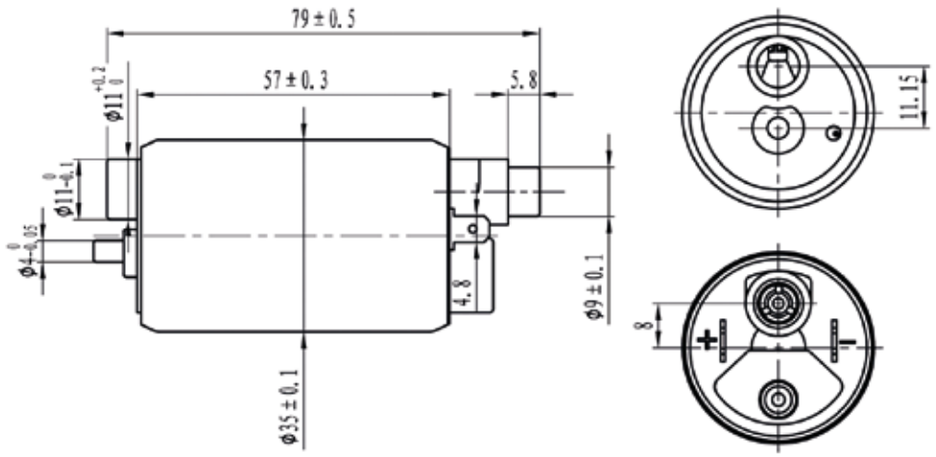

121660080

Pompa benzina elettrica a immersione | *Submersible electric fuel pump*
Pressione di esercizio 3 Bar | *Working pressure 3 Bar*
Portata 35 l/h | *Flow 35 l/h*

HONDA: R.O. 16730-KTF-640 • 16730-KTW-902
KAWASAKI: R.O. 490400026
KYMCO: R.O. 00117309



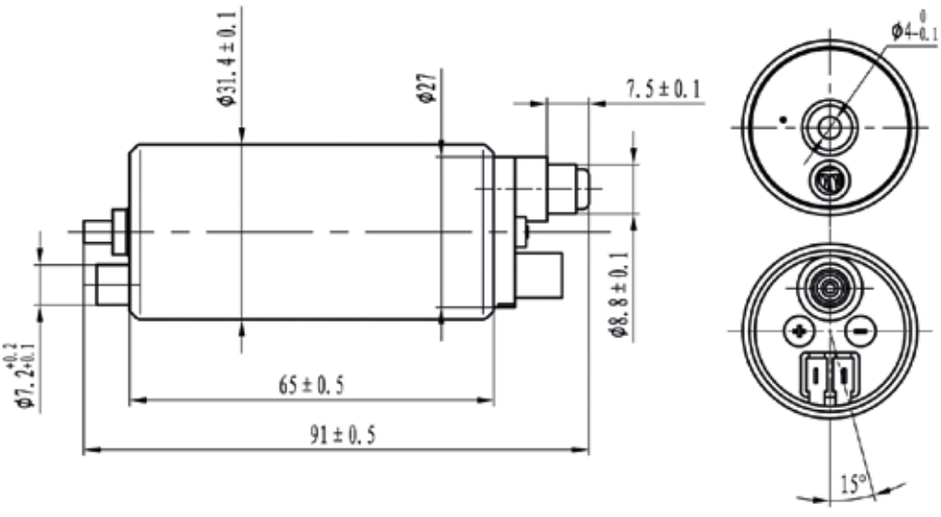



121660090

Pompa benzina elettrica a immersione | *Submersible electric fuel pump*
Pressione di esercizio 5 Bar | *Working pressure 5 Bar*
Portata 100 l/h | *Flow 100 l/h*

BMW: R.O. 16121461576 • 16121461580



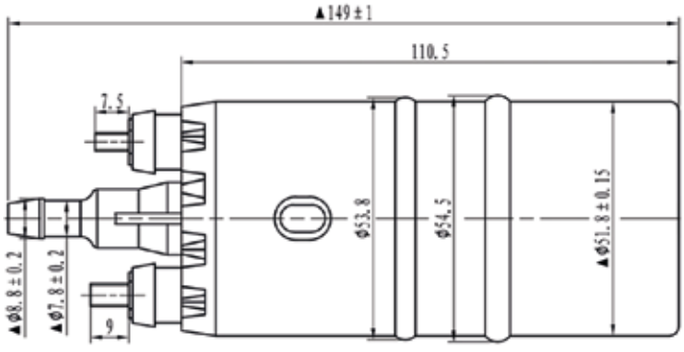

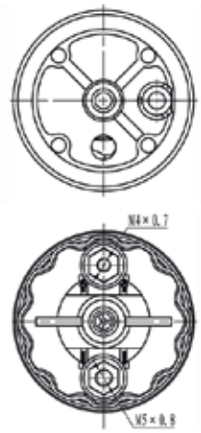

121660100

Pompa benzina elettrica a immersione | *Submersible electric fuel pump*
Pressione di esercizio 3 Bar | *Working pressure 3 Bar*
Portata 100-130 l/h | *Flow 100-130 l/h*

BMW: R.O. 16141341231 • 16141464730



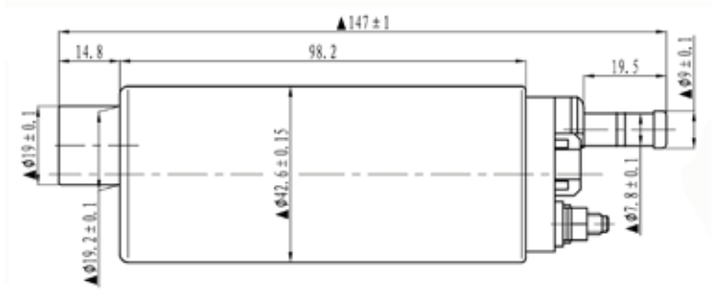

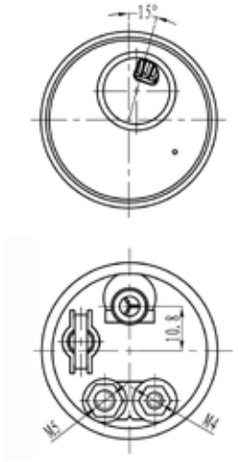

121660110

Pompa benzina elettrica a immersione | *Submersible electric fuel pump*
Pressione di esercizio 3 Bar | *Working pressure 3 Bar*
Portata 120 l/h | *Flow 120 l/h*

BMW: R.O. 16147723464 • 16147680379
KAWASAKI: R.O. 490401082
SUZUKI: R.O. 15110-10G00-000
SYM: R.O. 16700HGC000 • 16710H5B000



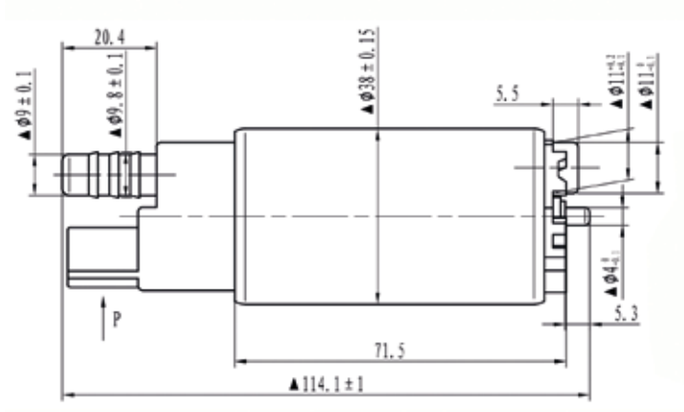

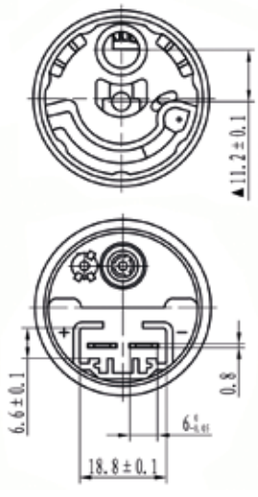



121660150 NEW

Pompa benzina elettrica a immersione | *Submersible electric fuel pump*
Pressione di esercizio 3 Bar | *Working pressure 3 Bar*
Portata 18,5 l/h | *Flow 18,5 l/h*

HONDA: R.O. 16700-K01-D02



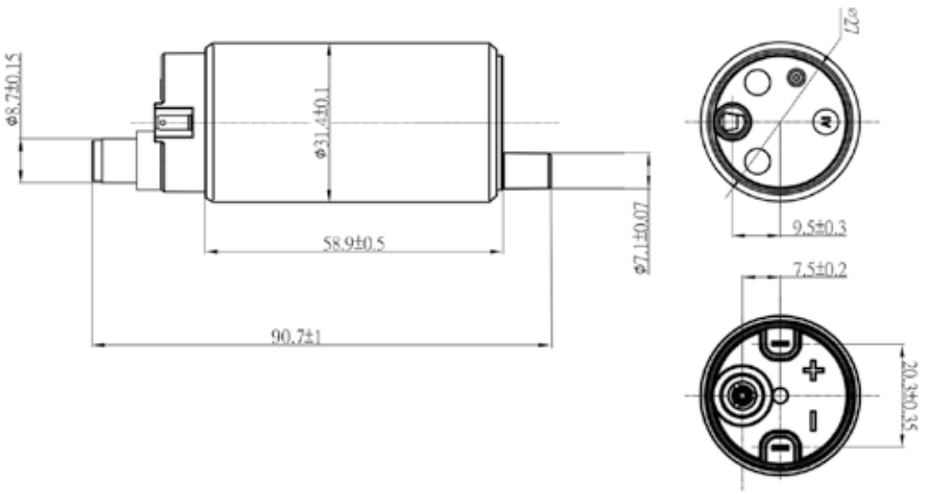

121660160 NEW

Pompa benzina elettrica esterna | *External electric fuel pump*
Pressione di esercizio 1 - 2,1 Bar | *Working pressure 1 - 2,1 Bar*
Portata 42 l/h | *Flow 42 l/h*

DERBI: R.O. 639861
GILERA: R.O. 639861
PIAGGIO: R.O. 639861
YAMAHA: R.O. 3YX139070100





121670010

Ø 10x1
APPLICAZIONI VARIE | *VARIOUS APPLICATIONS*



121670050

PIAGGIO 125-150-200: Vespa PX 77>
R.O. 158793



121670080

PIAGGIO 50: Si 79-88 • Si FL2 91-97 • Si Mix 96-99
R.O. 254724



121670020

GILERA 50: Easy Moving 95-96 • Ice 01-05 • Stalker 97-11 • Storm 94-95 • Storm Euro2 07 • Typhoon 94-97 • Typhoon X 98-99 • Typhoon XR 00
GILERA 125: Typhoon 95-98 • Typhoon X-XR 99-00
R.O. 575331
MALAGUTI 50: Crosser CR1 95-98 • Yesterday 97-00 • F10 Jet Line 92-98 • F10 Kat 99-00 • F10 Restyling 01-02 • F10 Restyling EU2-2.3 02-03 • F12 Phantom LC Twin Disks 98 • F12 Phantom 94-98 • Phantom LC 94-98 • F12 Phantom EU1 99-00 • F12 Phantom LC 99-00 • F12 Phantom Restyling LC 01-02 • F12 Phantom Restyling EU2 LC 02 • F12 Phantom Restyling EU2-2.3 03 • F12 Phantom LC Restyling EU2-2.3 03 • F15 Fire Fox • F15 Fire Fox Euro2 96-03 • F15 Fire Fox Twin Disk & Special 98-99 • F15 Fire Fox Twin Disc Digit Kat 98-00 • F15 LC-TDS Restyling Euro1 01
MALAGUTI 100: F12 Phantom 99-00
R.O. 09304500
MBK 50: Nitro 97-04 • Ovetto 97-01 • Ovetto Euro1 02-04 • Ovetto Euro2 02-03
R.O. 5ADF45000000
PIAGGIO 50: Free 92-94 • Free Delivery 00-01 • Free FL 95-02 • Liberty 97-05 • Liberty PTT Euro2 04-05 • NRG 94-96 • NRG RST MC2 96-98 • NRG MC3 01-04 • NRG Extreme 99-00 • NTT 96-98 • Vespa ET2 97-05 • Vespa ET2 Iniezione 97-00 • Sfera RST 95-97 • Sfera 91-93 • Sfera Maquillage 2 94 • Quartz 92-96 • Typhoon 01 • Zip 92-96 • Zip Bimodale 94-97 • Zip RST 96-99 • Zip SP 92-00 • Zip Fast Raider RST 96-97
PIAGGIO 80: SKR City 99
PIAGGIO 125: Vespa ET4 96-98 • Liberty 98-00 • Sfera 95-97 • Skipper 94-97 • Skipper LX 98-99
R.O. 575331
YAMAHA 50: Aerox 06-12 • Neo's 04-16 • R Neo's 97-02
R.O. 5ADF45000000



121670090

PIAGGIO 50: Ciao • Ciao Sc • Ciao PX • Ciao FL • Ciao Mix Teen
R.O. 143559



121670150

PIAGGIO 50: Vespa ET3
R.O. 139938



121670170

Senza Riserva | *Without reserve*

PIAGGIO 125: Vespa PX T5 85-89 • Vespa PX 98-01 • Vespa PX 11-17 • Vespa PX 30 Anni 07-08 • Vespa PX Euro2 01-07 • Vespa PXE Arcobaleno 81-97
PIAGGIO 150: Vespa PXE Arcobaleno 81-97 • Vespa PX 11-17
PIAGGIO 200: Vespa PXE Arcobaleno 81-97
R.O. 217872



121670180

PIAGGIO 50: Ape P 80-85 • Ape TM P 85-89
R.O. 118092



121670190

PIAGGIO 50: Ape FL-FL2 89-95 • Ape RST Mix 99-03 • Ape FL3 Europa 96-99
PIAGGIO 220: Ape TM 09-16 • Ape TM P602 82-83 • Ape TM P703 FL2 99-07 • Ape TM P703-P703V FL2 84-05
R.O. 189320



121670200

PIAGGIO 220: Ape MP P501-P601 78-96
R.O. 118422





121670220



GILERA 50: Dna 00-02 • Runner 97-00 • Runner SP 02-04 • Runner Poggiali 02-02
GILERA 125: Dna 01 • Runner FX-FXR 97-02 • Runner VX-VXR 00-04
GILERA 180: Dna 01 • Runner FX-FXR 97-02 • Runner VX-VXR 00-04
GILERA 200: Runner VX-VXR 00-02
R.O. 577881
PIAGGIO 100: Free 02-03
R.O. 577881

121670230



DERBI 50: Boulevard 2T 09-14 • Boulevard 4T Eu2 25 Km/h 09 • Gp1 Eu2 05 • GP1 Race Eu2 05-07 • Sonar 2T 09 • Variant Sport 2T 12
DERBI 100: Boulevard 4T 10-11
DERBI 125: Boulevard 02-04 • Boulevard Eu2 04-07 • Boulevard 4T Eu3 08-12 • Sonar 4T 09-11 • Variant Sport 4T E3 12
DERBI 150: Boulevard 4T E3 10 • Sonar 4T 09
DERBI 200: Boulevard Eu2 05-06
R.O. 575321
PIAGGIO 50: Liberty 4T 00-02 • Vespa ET2 97-01 • Vespa ET4 00-02 • Zip 00-13 • Zip Sp 01-04
PIAGGIO 125: Liberty 98-00 • Liberty RST 04-05 • Liberty RST PTT 05-11 • Liberty Sport 06-06 • Zip 00-02
PIAGGIO 150: Fly 05-11 • Liberty MOC 4T Euro3 09-13 • Vespa LX 05-08 • Skipper 4T 00-02
PIAGGIO 200: Liberty 06-08 • Liberty RST 04 • Liberty Sport 06 • Vespa Granturismo 03-07
R.O. 575321

121670240



MALAGUTI 125: Madison 99-01 • Madison R Restyling 02 • Madison R Restyling Euro2 03-04
MALAGUTI 150: Madison T 99-01
R.O. 09305900
MBK 125: Skyliner 98-00
MBK 150: Skyliner 00
R.O. 5DSF450000
YAMAHA 125: Majesty 98-00
YAMAHA 150: Majesty 00
R.O. 5DSF450000

121670250



MBK 50: CW Booster 90-04 • CW R Booster Road 94-95 • CW Booster Spirit 96-00 • CW L Booster 01-03 • CW SP Booster Spirit Eu2 02 • CW Booster Spirit Eu2 02-03 • CW L Booster Spirit 03 • CW Booster Naked 03 • YE Evolis 92-95 • YM Fizz 94-95
R.O. 5XWF45000000
YAMAHA 50: YM Breeze 94-95 • BW'S Original 97-02 • BW'S R 01 • CW SP BW'S Original Eu2 02 • CW BW'S Original Eu2 02-03 • CW L BW'S 03 • BW'S Naked 03
R.O. 5XWF45000000

121670260



Serbatoio in metallo | *For fuel metal tank*
HONDA 50: SH
HONDA 125-150: SH Scoopy
BAOTIAN - SCOOTER CINESI 50

121670270



HONDA 125-150: SH



121678023

Con vaschetta in alluminio | *With aluminium bowl*

PIAGGIO: Applicazioni varie Vespa - *Various Vespa applications*



121678033

PIAGGIO: Applicazioni varie Vespa - *Various Vespa applications*





121680020

ASTA RUBINETTO | *FUEL TAP LEVER*
Lunghezza 175 mm | *Lenght 175 mm*

PIAGGIO 50-125: Vespa PK • Vespa PXE Arcobaleno
R.O. 103202



121680040

ASTA RUBINETTO | *FUEL TAP LEVER*
Lunghezza 200 mm | *Lenght 200 mm*

PIAGGIO 50-90-125: Vespa Primavera ET3
R.O. 098514



121830040

GOMMINO ASTA RUBINETTO | *FUEL ROD RUBBER*
Confezione 10 pz. | *10 Pcs Packing*

PIAGGIO 125-150-200: Vespa PX • Vespa PXE
R.O. 194631



121830340

GOMMINO ASTA RUBINETTO NERO | *FUEL ROD RUBBER (BLACK COLOUR)*
Confezione 5 pz. | *5 Pcs Packing*

PIAGGIO 50-125 : Vespa PK • Vespa Primavera ET3
V5A1-V5B1-V5B2-V5SA1-V9A1-VMA2-VMB1
R.O. 132538



121830341

GOMMINO ASTA RUBINETTO GRIGIO | *FUEL ROD RUBBER (GREY COLOUR)*
Confezione 5 pz. | *5 Pcs Packing*

PIAGGIO 50-125 : Vespa PK • Vespa Primavera ET3
V5A1-V5B1-V5B2-V5SA1-V9A1-VMA2-VMB1
R.O. 132538



121830530

GUARNIZIONE RUBINETTO BENZINA | *FUEL TAP GASKET*
Confezione 5 pz. | *5 Pcs Packing*

PIAGGIO 50-90-125-150-160-180: Vespa Primavera ET3 • Vespa GL • Vespa GS • Vespa SS
V5A-V5A1T-V5SS1T-V9A1T-V9SS1T-V33TVM1/2T-VU1T-VN1/2T-VNA1T-VNB1/2/3/4/5/ T-VNC1TVMA1T-VNL2T-VB1T-VBA1-VBB1TVBC-VLA1TVS1T-VSB1T-VSC1T
R.O. 13836





100607000

FILTRO BENZINA | *FUEL FILTER*
Attacco tubo Ø 6-8 mm | *Pipe attack Ø 6-8 mm*
Elemento filtrante in carta | *Paper filter*
Confezione 10 pz. | *10 Pcs Packing*

APPLICAZIONI VARIE



100607010

FILTRO BENZINA | *FUEL FILTER*
Attacco tubo Ø 7 mm | *Pipe attack Ø 7 mm*
Confezione 10 pz. | *10 Pcs Packing*

APPLICAZIONI VARIE



100607020

UFI

FILTRO BENZINA | *FUEL FILTER*
Attacco tubo Ø 8 mm | *Pipe attack Ø 8 mm*

DUCATI 851: 851 S • 851 SS • SP2 • SP3
MOTO GUZZI 1000: Daytona • V10 Centauro
MOTO GUZZI 1100: V11 Cafè Sport • V11 Le Mans • V11 Sport



100607030

UFI

FILTRO GASOLIO | *DIESEL FUEL FILTER*

AIXAM: Microcars Serie 3251
BELLIER: Divane 505 D • VX 550 • S
CARLETTI: 500 SL • Top SL
CASALINI: Sulky • Ydea 505 GLX Diesel
CHATENET: Stella 214 • Passion
GRECAV: Eke • Diesel • E • L • LM • LP • XL XLe Palladium
JDM: Alabiza Base L • Club • Confort L
LIGIER: Diesel • Ambra 162 GL GLS • Sulky
MICROCAR: Lyra 505 Sprint • TXE • Virgo 505
SAVEL: Spacia 2 RE
TASSO: 505 • C1DB TS Bingo • SS Domino Pick Up • Hola



100607040

UFI

FILTRO GASOLIO | *DIESEL FUEL FILTER*

PIAGGIO 420: Ape TMP 703 Diesel • Ape Poker Diesel
PIAGGIO 1200: Porter • Lombardini 01-95>
PIAGGIO 1400: Porter • Lombardini 01-95>
R.O. 247444



100607050

UFI

FILTRO GASOLIO | *DIESEL FUEL FILTER*

PIAGGIO 420: Ape TMP 703 Diesel • Ape Poker Diesel
R.O. 438015





100607060

UFI

FILTRO BENZINA | *FUEL FILTER*
Attacco tubo Ø 8 mm | *Pipe attack Ø 8 mm*

BMW 125: C1
BMW 750: K75 • K75 C • K75 RT • K75 S
BMW 850: R850
BMW 1000: K1 • K100 • K100 LT • K100 LT Abs • K100 RS • K100 RT
BMW 1100: K1100 • K1100 LT • K1100 RS • R1100 GS • R1100 R • R1100 RS • R1100 RT • R1100 RT Abs • R1100 S
BMW 1150: R1150 GS
BMW 1200: R1200 • R1200 C • K1200 • K1200 LT • K1200 RS
CAGIVA 650: Raptor • V-Raptor (Suzuki)
CAGIVA 900: Elefant • Gran Canyon
CAGIVA 1000: Navigator • Raptor • V-Raptor • X-Tra Raptor (Suzuki)
DUCATI 748: 748 • 748 Biposto • 748 R • 748 S • 748 SP
DUCATI 750-800: Supersport
DUCATI 851: 851 • 851 S • 851 SS
DUCATI 888: 888 • 888 Biposto • 888 SP4 • 888 SP5 • 888 Strada
DUCATI 900: Monster • Monster Cromo • Monster Dark City • Monster S
DUCATI 916: Monster S4 • Sport Toruing ST4 • 916 • 916 Biposto • 916 Senna • 916 SP
DUCATI 944: Sport Touring ST2
DUCATI 998: 998 • 998 S • 1000 S. Sport ie
TRIUMPH 900: Speed Triple T509
TRIUMPH 955: Tiger • Daytona • Sprint ST



100607070

FILTRO BENZINA | *FUEL FILTER*

KYMCO 50: Agility 10"- 12" • B&W • CX • Dink • Filly • Heroism • KXR • MAXXER • MXU • Sniper • Super 9 • Vitality • Yup
KYMCO 125: Agility Carry • Agility RS • B&W • Dink Classic • Dink LX • Heroism • Movie • MXER • Quannon • Vivio Zing
KYMCO 150: B&W • Dink • Heroism • MXER • MXU
KYMCO 250: B&W • KXR • MXU
KYMCO 300: MAXXER • MXU
R.O. 00159119



100607080

UFI

FILTRO GASOLIO | *DIESEL FUEL FILTER*

PIAGGIO 420: Ape TM Diesel LCS 05-12 • Ape TM P703-P703V Diesel 87-04
PIAGGIO 1200: Porter Diesel 95-00
PIAGGIO 1400: Porter Pick Diesel 98-05 • Porter Van Diesel 98-05
R.O. 493290





121730030

Modello senza miscelatore | *Model without mixer*

PIAGGIO 125: Vespa 125 T5 85-89 • Vespa PXE Arcobaleno 81-97
PIAGGIO 150-200: Vespa PXE Arcobaleno 81-97
R.O. 2280825



121730050

Modello senza miscelatore | *Model without mixer*

PIAGGIO 125-150-200: Vespa PX
R.O. 2194672



121730060

PIAGGIO 50: Vespa 50 67-82 • Vespa S 68-82 • Vespa L 70-83 • Vespa R 70-83 • Vespa 50 Special 75-83
PIAGGIO 90-100: Vespa 78-83
PIAGGIO 125: Vespa Primavera 67-83 • Vespa Primavera ET3 76-83
V5A1T-V5B3T-V5SA1T-V9A1T-VMA2T-VMB1T
R.O. 1386172



121730070 NEW

Modelli con miscelatore | *With oil mixer models*

LML 125-150: Star 2T
R.O. C-4723019





121650010

TAPPO SERBATOIO BENZINA | *FUEL CAP*

MBK 50: Nitro 97-02
YAMAHA 50: Aerox 97-02



121650030

TAPPO SERBATOIO BENZINA (CON GUARNIZIONE) | *FUEL CAP (WITH GASKET)*
Confezione 5 pz. | *5 Pcs Packing*

PIAGGIO 50: Ciao P • Ciao PX • Ape FL-FL2 89-95 • Ape FL3 Europa 96-99 • Ape P 80-85 • Ape TM P 85-89
R.O. 182356



121650042

TAPPO SERBATOIO | *FUEL CAP*

PIAGGIO 50: Vespa FL 90 • Vespa FL2 Automatica 90-91 • Vespa N 89-90 • Vespa PK XL 85-88 • Vespa PK Automatica 84-89 • Vespa PK XL Rush 88-89
PIAGGIO 125: Vespa FL • Vespa PX 85-89 • Vespa PX T5 85-89 • Vespa PX Euro2 01-07 • Vespa PXE Arcobaleno 81-97
PIAGGIO 150: Vespa PX 11-17 • Vespa PXE Arcobaleno 81-97
PIAGGIO 200: Vespa PXE Arcobaleno 81-97
R.O. 575825



121650063

KIT TAPPO SERBATOIO VESPA | *VESPA CAP TANK KIT*

PIAGGIO: Vespa
Pomello R.O. 092217
Copiglia R.O. 003212
Tirante R.O. 004435



121710010

SONDA RISERVA | *FUEL SENSOR*

GILERA 50: Easy Moving 95-96
PIAGGIO 50: Zip 92-96 • Zip Bimodale 94-97 • Zip RST 96-99 • Zip Fast Raider RST 96-97 • Zip fast Raider 93-94 • Zip SP 96-00
R.O. 259346



121710040

SONDA LIVELLO CARBURANTE | *FUEL SENSOR LEVEL*

PIAGGIO 50: Fly 2T 05-11 • Fly 4T 25-30 Km/h 08-11 • Fly 4T 2V 25-30 Km/h 12-17 • Fly 4T Motore CHN 06-07 • Fly 4T 05-07
PIAGGIO 100: Fly 4T 06-14
PIAGGIO 125: Beverly Euro3 3 MIC 07 • Beverly Euro3 Sport 07-08 • Beverly Euro3 07-08 • Beverly RST 4T 4V ie Euro3 10-15 • Beverly RST 05-07 • Beverly Tourer Euro3 07-10 • Fly Euro3 07-11 • Fly 05-07 • Vespa GTS ie Abs E4 16-17
PIAGGIO 150: Fly Euro3 08-11 • Fly 05-07 • Vespa GTS 4T E4 Abs (Emea) 16-17
PIAGGIO 200: Beverly 06-07
PIAGGIO 300: Beverly RST 4T 4V ie Euro3 10-15
R.O. CM025706





121730043

TRASMETTITORE LIVELLO BENZINA | *FUEL GAUGE*
Adatto per 121730030 | *Fit on 121730030*

PIAGGIO 125: Vespa 125 T5 85-89 • Vespa PXE Arcobaleno 81-97
PIAGGIO 150-200: Vespa PXE Arcobaleno 81-97
R.O. 218585



121710060 NEW

TRASMETTITORE LIVELLO BENZINA | *FUEL GAUGE*

PIAGGIO 50: Ape FL-FL2 89-95 • Ape FL3 Europa 96-99 • Ape Mix 2T 98-08 • Ape RST Mix 99-03 • Ape 09-17
R.O. 291530



121710070 NEW

TRASMETTITORE LIVELLO BENZINA | *FUEL GAUGE*

GILERA 125-180: Runner FX-FXR 97-02
R.O. 580497



121710080 NEW

TRASMETTITORE LIVELLO BENZINA | *FUEL GAUGE*

PIAGGIO 50: Ape 2T EU4 18-19
R.O. 1D002522



121710090 NEW

TRASMETTITORE LIVELLO BENZINA | *FUEL GAUGE*

PIAGGIO 50: Vespa FL 90 • Vespa FL2 HP 91-97 • Vespa N 89-90 • Vespa PK XL RUSH 88-99 • Vespa PK XL 85-88
PIAGGIO 125: Vespa FL 89-90
R.O. 228444



121710100 NEW

TRASMETTITORE LIVELLO BENZINA | *FUEL GAUGE*

PIAGGIO 125: Vespa PX 30 Anni 07-08 • Vespa PX Euro2 01-07 • Vespa PX T5 85-89 • Vespa PX 11-17 • Vespa PX 98-01 • Vespa PXE Arcobaleno 81-97
PIAGGIO 150: Vespa PX 11-17
R.O. 228090



121830950 NEW

GUARNIZIONE SONDA LIVELLO CARBURANTE | *FUEL SENSOR LEVEL GASKET*

PIAGGIO 50: Vespa FL 90 • Vespa FL2 HP 91-97 • Vespa N 89-90
PIAGGIO 125: Vespa PX 30 Anni 07-08 • Vespa PX Euro2 01-07 • Vespa PX 11-17 • Vespa PX 98-01 • Vespa FL 89-90
PIAGGIO 150: Vespa PX 11-17
R.O. 228354





PVC PLASTIFICATO 63ShA - *PLASTIFIED PVC 63ShA*



Dimensioni (mm) *Dimensions (mm)*	**Lunghezza (mt)** *Lenght (mt)*	**Applicazione** *Application*	**Codice RMS** *RMS Code*	**Codice a barre** *Barcode*
Ø 2,2 x 4	5	Tubo miscelatore	*Mixer oil hose*	**121690010**	
Ø 2,5 x 5	5	Tubo miscelatore	*Mixer oil hose*	**121690080**	
Ø 3 x 5	5	Tubo sfiato benzina	*Fuel vent hose*	**121690020**	
Ø 4 x 7	5	Tubo per benzina	*Fuel hose*	**121690030**	
Ø 4 x 7	50	Tubo per benzina	*Fuel hose*	**121690039**	
Ø 5 x 7	5	Tubo per benzina	*Fuel hose*	**121690090**	
Ø 5 x 10	5	Tubo per benzina	*Fuel hose*	**121690040**	
Ø 5 x 10	50	Tubo per benzina	*Fuel hose*	**121690049**	
Ø 6 x 9	5	Tubo per benzina	*Fuel hose*	**121690050**	
Ø 6 x 9	50	Tubo per benzina	*Fuel hose*	**121690059**	
Ø 7 x 12	5	Tubo per benzina	*Fuel hose*	**121690060**	
Ø 7 x 12	50	Tubo per benzina	*Fuel hose*	**121690069**	
Ø 7 x 14	5	Tubo per benzina	*Fuel hose*	**121690070**	

PVC + 30% PU 65ShA



Dimensioni (mm) *Dimensions (mm)*	**Lunghezza (mt)** *Lenght (mt)*	**Applicazione** *Application*	**Codice RMS** *RMS Code*	**Codice a barre** *Barcode*
Ø 4 x 7	5	Specifico per benzina verde ed olio	*Specific for unleaded fuel and oil*	**121690031**	
Ø 5 x 7	5	Specifico per benzina verde ed olio	*Specific for unleaded fuel and oil*	**121690091**	
Ø 5 x 10	5	Specifico per benzina verde ed olio	*Specific for unleaded fuel and oil*	**121690041**	
Ø 6 x 9	5	Specifico per benzina verde ed olio	*Specific for unleaded fuel and oil*	**121690051**	
Ø 7 x 12	5	Specifico per benzina verde ed olio	*Specific for unleaded fuel and oil*	**121690061**	
Ø 7 x 14	5	Specifico per benzina verde ed olio	*Specific for unleaded fuel and oil*	**121690071**	



POLIURETANO - *POLYURETHANE*



	Dimensioni (mm) *Dimensions (mm)*	Lunghezza (mt) *Lenght (mt)*	Applicazione *Application*	Codice RMS *RMS Code*	Codice a barre *Barcode*
NEW	Ø 4 x 7	1	Specifico per benzina verde ed olio I *Specific for unleaded fuel and oil*	**121690100**	
NEW	Ø 5 x 10	1	Specifico per benzina verde ed olio I *Specific for unleaded fuel and oil*	**121690110**	
NEW	Ø 6 x 9	1	Specifico per benzina verde ed olio I *Specific for unleaded fuel and oil*	**121690120**	
NEW	Ø 7 x 12	1	Specifico per benzina verde ed olio I *Specific for unleaded fuel and oil*	**121690130**	

TPR/UML



	Dimensioni (mm) *Dimensions (mm)*	Applicazione *Application*	Codice RMS *RMS Code*	Codice a barre *Barcode*
NEW	Ø Interno 6,5 mm	Specifico per sistemi ad iniezione I *Specific for injection sistem*	**121690140**	
NEW	Ø Interno 7,5 mm	Specifico per sistemi ad iniezione I *Specific for injection sistem*	**121690150**	



121859000

COLLARE TUBO BENZINA Ø 20 mm | *FUEL CLAMP Ø 20 mm*
Confezione 5 pz. | *5 Pcs Packing*



121859010

COLLARE TUBO BENZINA Ø 10-12 mm | *FUEL CLAMP Ø 10-12 mm*
Confezione 5 pz. | *5 Pcs Packing*



121859020

COLLARE TUBO BENZINA Ø 12-14 mm | *FUEL CLAMP Ø 12-14 mm*
Confezione 5 pz. | *5 Pcs Packing*



121860020

COLLARE TUBO BENZINA Ø 14-16 mm | *FUEL CLAMP Ø 14-16 mm*
Confezione 5 pz. | *5 Pcs Packing*



121680060

RACCORDO RAPIDO TUBO BENZINA Ø 6 mm | *FUEL HOSE QUICK CONNECTOR Ø 6 mm*



121680070

RACCORDO RAPIDO TUBO BENZINA Ø 8 mm | *FUEL HOSE QUICK CONNECTOR Ø 8 mm*





MEMBRANE CARBURATORE

CARBURETOR DIAPHRAGM

Modello *Model*	**CC**	**Da** *From*	**A** *To*	**Telaio** *Frame*	**OEM**	**Codice RMS** *RMS Code*
APRILIA						
Leonardo	250	2002	2004	SV000\SVA00	AP8106995	**121661170**
BENELLI						
Velvet 125-150	125	1999	2001	M1000	R18341211A0	**121661160**
Velvet Touring 125-150	125	2002	2003		R18341211A0	**121661160**
Velvet 125-150	150	1999	2001	M1000	R18341211A0	**121661160**
Velvet Touring 125-150	150	2002	2003		R18341211A0	**121661160**
Velvet Touring	250	2002	2003	M70001P	R18440431A0	**121661170**
HONDA						
Nes 125 @/ Arobase	125	2000	2000	JF07A	16111-KGF-911	**121661180**
Nes 125 @/ Arobase	125	2001	2002	JF07B	16111-KGF-911	**121661180**
Ses 125 Dylan	125	2002	2006	JF10A	16111-KGF-911	**121661180**
Sh 125	125	2001	2004	JF09A	16111-KGF-911	**121661180**
Sh 150	150	2001	2004	KF04A	16111-KGF-911	**121661180**
KYMCO						
Agility 4T Carry	50	2011	2011	U65010	00105115	**121661250**
Agility 4T R10	50	2006	2006	U60010	00105115	**121661250**
Agility 4T R10	50	2007	2008	U60080	00105115	**121661250**
Agility 4T R12	50	2007	2008	U60050	00105115	**121661250**
Agility 4T R16	50	2008	2008	C10000	00105115	**121661250**
Agility 4T R16	50	2009	2009	C10000	00105115	**121661250**
Agility 4T R16	50	2012	2012	C10000	00105115	**121661250**
Agility Plus 4T	50	2014	2014	12000	00105115	**121661250**
Agility R12	50	2005	2005	U60000	00105115	**121661250**
Super 8	50	2007	2007	U70000	00105115	**121661250**
Super 8 4T	50	2009	2009	U70300	00105115	**121661250**
Super 8 4T	50	2013	2013	U71000	00105115	**121661250**
Agility 4T	125	2006	2006	U62000	00105036	**121661260**
Agility 4T Euro3	125	2006	2008	U62001	00105036	**121661260**
Agility Carry	125	2011	2011	U62060	00105036	**121661260**
Agility Plus	125	2014	2014	C21000	00105036	**121661260**
Agility R16	125	2008	2008	C20000	00105036	**121661260**
Agility R16	125	2009	2009	C20000	00105036	**121661260**
Dink 125 Euro3	125	2006	2007	T90000	00105036	**121661260**
Like	125	2009	2009	D20000	00105036	**121661260**
Like Lx	125	2012	2012	D20000	00105036	**121661260**
Movie 125 Euro3	125	2006	2007	S50012	00105036	**121661260**
Movie Xl 125-150 Euro2	125	2003	2004	S50011\S50001	00105036	**121661260**
People 125-150 Euro2	125	2003	2003	B20010\B20020	00105036	**121661260**
People Euro3	125	2007	2007	B20011	00105036	**121661260**
People Euro3	125	2008	2008	B20011	00105036	**121661260**
People Euro3	125	2011	2011	B20011	00105036	**121661260**
People S	125	2005	2005	D10000	00105036	**121661260**
People S Dd Euro3	125	2007	2008	D10000	00105036	**121661260**
Super 8	125	2008	2008	U80100	00105036	**121661260**
Agility R16	150	2008	2008	C30000	00105036	**121661260**
Agility R16	150	2009	2009	C30000	00105036	**121661260**
Movie 150 Euro3	150	2006	2007	S50002	00105036	**121661260**
People S	200	2005	2005	D11000	00105036	**121661260**
MALAGUTI						
Madison	125	1999	2001	530000	62317000	**121661160**
Madison R Restyling	125	2002	2002	530000	62317000	**121661160**
Madison R Restyling Euro2	125	2003	2004	690102	62333800	**121661160**
Phantom Max	125	2003	2003	660000	62333800	**121661160**
Madison T	150	1999	2001	550000	62317000	**121661160**
Madison S	250	1999	2001	540000	92302600	**121661170**
MBK						
Xn Doodo	125	2000	2001	5MF2	5DS1434A1000	**121661160**
Xq Thunder	125	2001	2002	5HT	5DS1434A1000	**121661160**



Modello *Model*	CC	Da *From*	A *To*	Telaio *Frame*	OEM	Codice RMS *RMS Code*
Yp E Skyliner	125	2003	2003	5XL2	4HC143400100	**121661170**
Yp Skyliner	125	1998	2000	5DS	5DS1434A1000	**121661160**
Yp Skyliner	125	2001	2002	5NR	5DS1434A1000	**121661160**
Xn Doodo	150	2001	2002	5PR	5DS1434A1000	**121661160**
Xq Thunder	150	2001	2002	5LG	5DS1434A1000	**121661160**
Yp E Skyliner	180	2003	2003	5XM2	4HC143400100	**121661170**
Yp Skyliner	250	2000	2001	5GM	4HC143400100	**121661170**
Yp Skyliner	250	2002	2003	5SJ	4HC143400100	**121661170**
Yp Skyliner Abs	250	2003	2003	5SJ7	4HC143400100	**121661170**
Xc Kilibre	300	2003	2003	5SE2	4HC143400100	**121661170**
PIAGGIO						
Fly 4T	50	2005	2007	C44200	CM146601	**121661210**
Fly 4T & 25-30 Km/H	50	2008	2011	C44500	CM146601	**121661210**
Fly 4T 2V	50	2013	2015	RP8C523	CM146601	**121661210**
Fly 4T 2V 25-30Km-H	50	2012	2017	RP8C522	CM146601	**121661210**
Fly 4T Motore Chn	50	2006	2007	C44500	CM146601	**121661210**
Liberty 4T	50	2000	2002	C2800	828820	**121661210**
Liberty 4T	50	2005	2008	C42400	CM146601	**121661210**
Liberty 4T Delivery - Single	50	2010	2014	C42401	CM146601	**121661210**
Liberty 4T Delivery Tnt	50	2009	2009	C42401	CM146601	**121661210**
Liberty 4T Ptt - Double - Nexive	50	2009	2017	C42402\C42404	CM146601	**121661210**
Liberty 4T Ptt (Deu)	50	2007	2012	C42406	CM146601	**121661210**
Liberty 4T Rst	50	2004	2004	C42200	828820	**121661210**
Liberty 4T Sport	50	2006	2006	C42405	CM146601	**121661210**
Liberty 4T Sport	50	2007	2008	C42405	CM146601	**121661210**
Liberty Moc 4T & Elle	50	2009	2016	C49200	CM146601	**121661210**
Vespa Et4	50	2000	2005	C26100	CM146601	**121661210**
Vespa Lx 4T	50	2005	2009	C38300	CM146601	**121661210**
Vespa Primavera 4T 2V 25 Km/H	50	2014	2017	C53300	CM146601	**121661210**
Zip 4T	50	2000	2005	C25000	CM146601	**121661210**
Zip 4T	50	2006	2013	LBMC25C	CM146601	**121661210**
Zip 4T 25Km-H	50	2006	2016		CM146601	**121661210**
Beverly	125	2001	2003	M2810\M2820	CM129701	**121661190**
Beverly Euro 3	125	2007	2008	M28900	CM140301	**121661220**
Beverly Euro 3 Mic	125	2007	2007	M28900	CM140301	**121661220**
Beverly Euro 3 Sport	125	2007	2008	M28900	CM140301	**121661220**
Beverly Rst	125	2004	2005	M28400	CM129701	**121661190**
Beverly Rst	125	2005	2007	M28400	CM140301	**121661220**
Beverly Tourer Euro3	125	2007	2010	M28901	CM140301	**121661220**
Carnaby	125	2007	2010	M60200	CM140301	**121661220**
Fly	125	2005	2007	M42100	CM140302	**121661200**
Fly Euro3	125	2007	2007	M57100	CM140302	**121661200**
Fly Euro3	125	2008	2011	M57200	CM140302	**121661200**
Hexagon Gtx	125	2000	2000	M2000000\M2000001	CM129701	**121661190**
Hexagon Lx4	125	1998	1999	M1500	478560	**121661230**
Leonardo	125	1996	1998	MB000\MBA00	AP8106478	**121661240**
Leonardo	125	1999	2002	MB03-6\MBA2-5	AP8106478	**121661240**
Leonardo St	125	2001	2004	TB000\TB002	AP8106478	**121661240**
Liberty	125	1998	2000	M1100	478560	**121661230**
Liberty 4T	125	2006	2007	M38100	CM140302	**121661200**
Liberty 4T 2V Euro3	125	2009	2012	M67100	CM140302	**121661200**
Liberty 4T Euro3	125	2006	2008	M38600	CM140302	**121661200**
Liberty 4T Euro3 Delivery - Single	125	2007	2015	M38602	CM140302	**121661200**
Liberty 4T Euro3 Delivery - Tnt - Nexive	125	2008	2015	P38602	CM140302	**121661200**
Liberty 4T Sport Euro3	125	2006	2008	M38601	CM140302	**121661200**
Liberty Rst Ptt	125	2005	2011	M38103	CM140302	**121661200**
Liberty Sport	125	2006	2006	M38104	CM140302	**121661200**
Mp3	125	2006	2008	M47300	CM140301	**121661220**



MEMBRANE CARBURATORE

CARBURETOR DIAPHRAGM

Modello *Model*	**CC**	**Da** *From*	**A** *To*	**Telaio** *Frame*	**OEM**	**Codice RMS** *RMS Code*
Sfera	125	1995	1997	M0100	478560	**121661230**
Super Hexagon Gtx 12	125	2001	2002	M2000002\M2000003	CM129701	**121661190**
Vespa Et4	125	1996	1998	M0400	478560	**121661230**
Vespa Granturismo	125	2003	2005	M311\312	CM140302	**121661200**
Vespa Granturismo	125	2006	2007	M31101	CM140301	**121661220**
Vespa Granturismo Euro 3	125	2006	2007	M31300	CM140301	**121661220**
Vespa Gts Euro3	125	2007	2012	M31300	CM140301	**121661220**
Vespa Gtv	125	2006	2008	M31301	CM140301	**121661220**
Vespa Gtv 4T Navy Euro3	125	2008	2008	M31301	CM140301	**121661220**
Vespa Lx	125	2005	2006	M44100	CM140302	**121661200**
Vespa Lx 4T FI	125	2009	2009	M44100	CM140302	**121661200**
Vespa Lx Euro 3	125	2006	2008	M44300	CM140302	**121661200**
Vespa Lxv 4T Euro3	125	2006	2009	M44301	CM140302	**121661200**
Vespa Lxv 4T Navy Euro3	125	2007	2008	M44301	CM140302	**121661200**
Vespa S 4T Euro 3	125	2007	2008	M44302	CM140302	**121661200**
X Evo	125	2007	2016	M36601\M36601	CM140301	**121661220**
X7 Euro 3	125	2008	2008	M62100	CM140301	**121661220**
X8	125	2004	2004	PM36200\PM36300	CM129701	**121661190**
X8	125	2005	2006	M36301	CM140301	**121661220**
X8 Premium Euro 2	125	2006	2006	M36301	CM140301	**121661220**
X8 Premium Euro 3	125	2006	2007	M36600	CM140301	**121661220**
X8 Street Euro 2	125	2006	2007	M49100	CM140302	**121661200**
X9	125	2001	2002	M2300001	CM129701	**121661190**
X9 Evolution	125	2003	2003	M2300035	CM129701	**121661190**
X9 Evolution	125	2005	2006	M23000	CM140301	**121661220**
X9 Evolution Euro3	125	2007	2007	M48100	CM140301	**121661220**
Fly	150	2005	2007	M42200	CM140302	**121661200**
Fly Euro3	150	2008	2011	M57100	CM140302	**121661200**
Liberty 4T Euro3	150	2008	2008	M38700	CM140302	**121661200**
Liberty 4T Sport Euro3	150	2008	2008	M38701	CM140302	**121661200**
Liberty Moc 4T Euro3	150	2009	2013	M67200	CM140302	**121661200**
Vespa Lx	150	2005	2006	M44200	CM140302	**121661200**
Vespa Lx 4T FI	150	2009	2009	M44400	CM140302	**121661200**
Vespa Lx Euro 3	150	2006	2008	M44400	CM140302	**121661200**
Vespa S 4T	150	2008	2009	M44402	CM140302	**121661200**
X8 Street Euro 2	150	2006	2008	M49200	CM140302	**121661200**
X9 Amalfi	180	2000	2003	M2300002	CM129701	**121661190**
Carnaby	200	2007	2008	M60100	CM140301	**121661220**
Liberty	200	2006	2006	M38400	CM140302	**121661200**
Liberty 4T Euro3	200	2006	2008	M38500	CM140302	**121661200**
Liberty 4T Sport Euro3	200	2006	2007	M38501	CM140302	**121661200**
Liberty Rst	200	2004	2004	M3840001	CM140302	**121661200**
Liberty Sport	200	2006	2006	M38401	CM140302	**121661200**
Vespa Granturismo	200	2006	2007	M31200	CM140301	**121661220**
X8	200	2005	2007	M36200	CM140301	**121661220**
X9	200	2002	2003	M2300003	CM129701	**121661190**
X9 Evolution	200	2003	2003	M2300003	CM129701	**121661190**
Beverly	250	2005	2007	M28500	CM140301	**121661220**
Beverly Rst	250	2004	2005	M28500	CM129701	**121661190**
X9 Evolution	250	2004	2004	M23000000	CM140301	**121661220**
X9 Evolution	250	2006	2006	M23000	CM140301	**121661220**
SYM						
Symphony S	125	2012	2012	AY12W7-T	16142ARA000	**121661270**
Symphony S	125	2013	2014	AY12W7-T	16142ARA000	**121661270**
Symphony Sr	125	2010	2010	AZ12W1-T	16142ARA000	**121661270**
Symphony Sr	125	2012	2014	AZ12W3-T	16142ARA000	**121661270**
Symphony S	150	2012	2012	AY15W6-T	16142ARA000	**121661270**
Symphony S	150	2013	2014	AY15W6-T	16142ARA000	**121661270**



Modello *Model*	**CC**	**Da** *From*	**A** *To*	**Telaio** *Frame*	**OEM**	**Codice RMS** *RMS Code*
Symphony Sr	150	2010	2010	AZ15W1-T	16142ARA000	**121661270**
Symphony Sr	150	2012	2014	AZ15W6-T	16142ARA000	**121661270**
YAMAHA						
Xn Teo'S	125	2000	2000	SE041	5DS1434A1000	**121661160**
Xq Maxster	125	2001	2002	SE051	5DS1434A1000	**121661160**
Yp125 Majesty	125	1998	2000	SE021	5DS1434A1000	**121661160**
Yp125 Majesty	125	2001	2002	SE061	5DS1434A1000	**121661160**
Yp125E Majesty	125	2003	2005	SE066	4HC143400100	**121661170**
Yp125E Majesty	125	2006	2006	SE066	4HC143400100	**121661170**
Xn Teo'S	150	2001	2002	SG071	5DS1434A1000	**121661160**
Xq Maxster	150	2001	2002	SG061	5DS1434A1000	**121661160**
Yp180E Majesty	180	2003	2006	SG121	4HC143400100	**121661170**
Yp250 Majesty	250	1996	1998	4UC	4HC143400100	**121661170**
Yp250 Majesty	250	2000	2001	SG041	4HC143400100	**121661170**
Yp250 Majesty	250	2002	2003	SG048	4HC143400100	**121661170**
Yp250 Majesty Abs	250	2003	2003	SG04B	4HC143400100	**121661170**
Yp250 Majesty Dx	250	1999	1999	SG021\SG022	4HC143400100	**121661170**
Xc Versity	300	2003	2003	SH011	4HC143400100	**121661170**
Xc Versity	300	2004	2005	SH014	4HC143400100	**121661170**

121661160

BENELLI: R.O. R18341211A0
MALAGUTI: R.O. 62317000 - 62333800
MBK: R.O. 5DS1434A1000
YAMAHA: R.O. 5DS1434A1000



121661170

APRILIA: R.O. AP8106995
BENELLI: R.O. R18440431A0
MALAGUTI: R.O. 92302600
MBK: R.O. 4HC143400100
YAMAHA: R.O. 4HC143400100



121661180

HONDA: R.O. 16111-KGF-911



121661190

PIAGGIO: R.O. CM129701



121661200

PIAGGIO: R.O. CM140302



121661210

PIAGGIO: R.O. CM146601 - 828820



121661220

PIAGGIO: R.O. CM140301



121661230

PIAGGIO: R.O. 478560



121661240

PIAGGIO: R.O. AP8106478



121661250 NEW

KYMCO: R.O. 00105115



121661260 NEW

KYMCO: R.O. 00105036



121661270 NEW

SYM: R.O. 16142Z7A000





121680083

ASTA STARTER | *CHOKE TIE ROD*

PIAGGIO 50: Vespa PK Automatica 84-89 • Vespa PK XL Plurimatic 85-90 • Ape FL-FL2 • Ape P • Ape TM P
PIAGGIO 125: Vespa PX 98-01 • Vespa PX 11-17 • Vespa PX Euro2 01-07 • Vespa PX T5 85-89 • Vespa PXE Arcobaleno 81-97
PIAGGIO 150: Vespa PX 11-17 • Vespa PXE Arcobaleno 81-97
PIAGGIO 200: Vespa PXE Arcobaleno 81-97
VNX - VSX - VLX
R.O. 580938



121830330

TAPPO VASCHETTA CARBURATORE | *RUBBER PLUG CARBURATOR CAISING*
Confezione 5 pz. | *5 Pcs Packing*

PIAGGIO 50: Si • Si FL2 • Si Mix • Vespa PK Automatica 90-91 • Vespa PK XL Plurimatic 85-90
PIAGGIO 125: Vespa 55-65 • Vespa PX T5 85-89 • Vespa PXE Arcobaleno 81-97
VNX VLX - VBX - VNX2 - VLX2 - VSX1
R.O. 050274



121860333

BULLONE CARBURATORE | *CARBURATOR BOLT*
Confezione 5 pz. | *5 Pcs Packing*

PIAGGIO 125: Vespa 55-65 • Vespa Sprint - GR - Super - Rally
PIAGGIO 150-180: Vespa Sprint - GR - Super - Rally
VNX - VLX -VSX
R.O. 049542



121859030

FASCETTA BANDA PIENA Ø 15-25 mm | *CLAMP Ø 15-25 mm*
Confezione 5 pz. | *5 Pcs Packing*

APPLICAZIONI VARIE



121859040

FASCETTA BANDA PIENA Ø 20-32 mm | *CLAMP Ø 20-32 mm*
Confezione 10 pz. | *10 Pcs Packing*

APPLICAZIONI VARIE



121859050

FASCETTA BANDA PIENA Ø 32-50 mm | *CLAMP Ø 32-50 mm*
Confezione 10 pz. | *10 Pcs Packing*

APPLICAZIONI VARIE



121859060

FASCETTA BANDA PIENA Ø 50-70 mm | *CLAMP Ø 50-70 mm*
Confezione 10 pz. | *10 Pcs Packing*

APPLICAZIONI VARIE





163770011

CINGHIA MISCELATORE | *MIXER BELT*
Confezione 8 pz. | *8 Pcs Packing*

APRILIA 50: Mojito Custom 2T Motore Piaggio 04-10 • Scarabeo 2T Euro2 Motore Piaggio 10-12 • Scarabeo 2T Net 09-10 • Scarabeo 2T 14 • Scarabeo Classic 2T Carburatore Euro4 18 • Scarabeo Street 2T Carburatore Euro4 18 • Scarabeo Street 2T Restyling 06-09 • Scarabeo Street 05-06 • Sport City One 2T 08-11 • SR Iniezione e Carburatore 14 • SR Motard 2T Euro4 18 • SR Motard 2T 12-14 • SR R Factory ie e Carburatore 10-14 • SR R H2O 2T Euro4 18 • SR R, R Factory 04-09 • SR Street 03-12
DERBI 50: Atlantis 2T Euro2 07-09 • Atlantis 2T 10 • Atlantis O2 Bullet 03-05 • Atlantis O2 City 03-06 • Atlantis O2 Red Bullet 03 • Atlantis O2 Two Chic 05 • Atlantis O2 02 • Boulevard 2T 09-14 • GP1 E2 03 • GP1 Euro2 05 • GP1 Open Euro2 06-09 • GP1 Race Euro2 05-07 • GP1 01-03 • Sonar 2T 09 • Variant Sport 2T 12
GILERA 50: Dna GP Experience 03-04 • Dna 00-07 • Easy Moving 95-96 • Ice 01-05 • Runner Poggiali 02 • Runner Purejet ST 08 • Runner Purejet 02-11 • Runner SP Special Edition 07 • Runner SP ST & Simoncelli 08-09 • Runner SP 02-12 • Runner 97-00 • Stalker Naked 08 • Stalker Special Edition 07-08 • Stalker 97-11 • Storm Euro2 07 • Storm 94-95 • Typhoon X 98-99 • Typhoon XR 00 • Typhoon 94-97
PIAGGIO 50: Diesis 01 • Fly 2T 03-11 • Free Delivery 00-01 • Free FL 95-02 • Free 92-94 • Liberty 2T RST 04 • Liberty 2T Sport 06-08 • Liberty 2T 06-08 • Liberty Moc 2T & Elle 09-13 • Liberty PTT Euro2 04-05 • Liberty 97-05 • NRG Extreme 99-00 • NRG Power DD Serie Speciale 07-12 • NRG Power DD 05-17 • NRG Power DT Serie Speciale 07-08 • NRG Power DT 06-15 • NRG Power H20 E4 No Abs 18 • NRG Purejet 04-11 • NRG Purejet 02-10 • NRG RST MC2 96-98 • NRG 94-96 • NTT 95-96 • Quartz 92-96 • Sfera Maquillage2 94 • Sfera RST 95-97 • Sfera 91-93 • Typhoon 2T Euro2 10-16 • Typhoon 2T Euro3 CH 11 • Typhoon 01-11 • Vespa ET2 97-05 • Vespa LX 2T Touring & 30 Km/h 10-13 • Vespa LX 2T 05-13 • Vespa LXV 2T Navy 08 • Vespa LXV 2T 06-09 • Vespa Primavera 2T 13-17 • Vespa S 2T & College 07-12 • Vespa Sprint 2T No Abs E2 14-17 • Zip 2T 08-13 • Zip Bimodale 94-97 • Zip Fast Raider RST 96-97 • Zip Fast Raider 93-94 • Zip RST 96-99 • Zip SP Euro2 06-13 • Zip SP 96-04 • Zip 92-04
R.O. 286162



163770022

CINGHIA MISCELATORE | *MIXER BELT*
Confezione 10 pz. | *10 Pcs Packing*

APRILIA 50: SR 99-01
GILERA 125: Runner FX-FXR 125-180 97-02 • Typhoon X-XR 99-00 • Typhoon 95-98
GILERA 180: Runner FX-FXR 125-180 97-02
PIAGGIO 80: Skr City 99
PIAGGIO 125: Hexagon LX-LXT 98-99 • Hexagon 94-97 • Skipper LX 98-99 • Skipper 94-97
R.O.431370



163770040

CINGHIA INIETTORE | *INJECTION BELT*

PIAGGIO 50: Vespa ET2 Iniezione 97-00
R.O. 480135



MOTORE
ENGINE
MOTOR
MOTEUR

Vilebrequins	*Cigueñales*	*Crankshafts*	**ALBERI MOTORE**	**124**
Kit Reparation Vilebrequins	*Kit Revision Eje Motor*	*Crankshaft Revision Kit*	**KIT REVISIONE ALBERO MOTORE**	**151**
Cylindre	*Grupo Termico*	*Cylinder*	**CILINDRI**	**155**
Culasses	*Culatas*	*Cylinder Heads*	**TESTE CILINDRO**	**181**
Accessoires Culasses	*Accesorios Culatas*	*Cylinder Heads Accessories*	**ACCESSORI TESTE CILINDRO**	**183**
Pistons - Segments de Pistons	*Pistones - Aros de Piston*	*Piston - Piston Rings*	**PISTONI - FASCE ELASTICHE**	**184**
Filtres à Huile	*Fitros de Aceite*	*Oil Filters*	**FILTRI OLIO**	**187**
Réservoir Huile	*Deposito Aceite*	*Oil Tank*	**SERBATOIO OLIO**	**241**
Accessoires Réservoir Huile	*Accesorios Deposito Aceite*	*Oil Tanks Accessories*	**ACCESSORI SERBATOI OLIO**	**242**
Pompe à Huile	*Bombas de Aceite*	*Oil Pumps*	**POMPE OLIO**	**243**
Pompe Huile Chaines	*Cadenas Bomba Aceite*	*Oil Pump Chains*	**CATENE POMPE OLIO**	**244**
Kit Reparation Pompe à Eau	*Kits Revision Bomba de Agua*	*Water Pump Repair Kits*	**KIT REVISIONE POMPA ACQUA**	**245**
Roues Libres Demarreur	*Ruedas Libres de Arranque*	*Starter Wheels*	**RUOTE LIBERE AVVIAMENTO**	**252**
Equipement de Démarrage	*Engranajes Arranque*	*Starter Gears*	**INGRANAGGI AVVIAMENTO**	**257**
Kit Démarreurs	*Kit Engranajes Arranque*	*Starter Gears Kit*	**KIT INGRANAGGI AVVIAMENTO**	**260**
Noix de Kick	*Piñones de Arranque*	*Pinion Starters*	**PIGNONI MESSA IN MOTO**	**262**
Accessoires Noix de Kick	*Accesorios Piñones de Arranque*	*Pinion Starters Accessories*	**ACCESSORI PIGNONI MESSA IN MOTO**	**265**
Ressort de Kick	*Muelles de Arranque*	*Starter Springs*	**MOLLE MESSA IN MOTO**	**266**
Chaînes de Distribution	*Cadenas de Distribucion*	*Timing Chains*	**CATENE DI DISTRIBUZIONE**	**267**
Maillons Connecteur Chaînes	*Enganches Cadena de Distribucion*	*Timing Chains Connecting Links*	**GIUNTI CATENE DISTRIBUZIONE**	**280**
Kit Guides Chaines	*Kit Guias Cadenas*	*Timing Chain Guides Kit*	**PATTINI TENDICATENA**	**281**
Courroies de Distribution	*Correas de Distribucion*	*Timing Belts*	**CINGHIE DI DISTRIBUZIONE**	**282**
Goujons de Moteur	*Esparragos Motor*	*Engine Studs*	**PRIGIONIERI MOTORE**	**285**
Caches Cylindre	*Carenados de Cilindro*	*Cylinder Cowlings*	**CUFFIE**	**288**
Capots du Volant	*Cubiertas del Ventilador*	*Fan Cover*	**COPRIVENTOLA**	**289**
Accessoires Capots du Volant	*Accesorios Cubiertas del Ventilador*	*Fan Cover Accessories*	**ACCESSORI COPRIVENTOLA**	**289**
Silentbloc Moteur	*Silentbloc Motor*	*Engine Silentblock*	**SILENTBLOCK MOTORE**	**290**
Tampons	*Tampones*	*Buffers*	**TAMPONI**	**291**
Accessoires Moteur	*Accesorios Motor*	*Engine Accessories*	**ACCESSORI MOTORE**	**292**



Modello *Model*	CC	Da *From*	A *To*	Telaio *Frame*	OEM	Codice RMS Standard *RMS Standard Code*	Codice RMS Racing *RMS Racing Code*
APRILIA							
Amico	50	1994	1994	HR	AP8206221	**100010010 100010011 100010012**	**100030010 100030011**
Amico	50	1996	1998	HU010	AP8206221	**100010010 100010011 100010012**	**100030010 100030011**
Amico GI-Gle	50	1993	1995	HU	AP8206221	**100010010 100010011 100010012**	**100030010 100030011**
Amico Lx- Sport-Cat	50	1992	1993	GC	AP8206221	**100010010 100010011 100010012**	**100030010 100030011**
Area 51	50	1998	2000	MY	AP8206501	**100010030 100010031 100010032**	**100030030 100030031**
Classic	50	1992	1999	GI\LP	AP8206311	**100010050**	-
Europa	50	1991	1992	-	AP8206311	**100010050**	-
Gulliver	50	1995	1998	LH000	AP8206501	**100010030 100010031 100010032**	**100030030 100030031**
Gulliver Lc	50	1996	1998	LH040	AP8206501	**100010030 100010031 100010032**	**100030030 100030031**
Mojito Custom 2T Motore Piaggio	50	2004	2010	TF000\TFA00	4316255	**100010200 100010202**	**100030200 100030201**
Mx	50	2004	2004	STC00	AP8206311	**100010050**	-
Pegaso	50	1992	1994	GT\LS	AP8206311	**100010050**	-
Rally	50	1995	2003	MD000\MDH00	AP8206501	**100010030 100010031 100010032**	**100030030 100030031**
Rally Liquid Cooled	50	1996	1999	MDA00\MAD10	AP8206501	**100010030 100010031 100010032**	**100030030 100030031**
Rs	50	1991	1992	GD\HA	AP8206311	**100010050**	-
Rs	50	1993	1995	HP\LM	AP8206311	**100010050**	-
Rs	50	1996	1998	MM02	AP8206311	**100010050**	-
Rs	50	1999	2005	PG00\SE00	AP8206311	**100010050**	-
Rx	50	2003	2004	STA0	AP8206311	**100010050**	-
Rx 3 - 5 Marce	50	1991	1994	FZ\HB\LR	AP8206311	**100010050**	-
Rx Enduro - Mx Motard	50	1995	2003	MU02\ST00	AP8206311	**100010050**	-
Rx Racing	50	2003	2006	STC00	AP8206311	**100010050**	-
Scarabeo	50	1993	1997	HS\LE	AP8206501	**100010030 100010031 100010032**	**100030030 100030031**
Scarabeo	50	1998	1998	PF000\PF0100	AP8206501	**100010030 100010031 100010032**	**100030030 100030031**
Scarabeo	50	1999	1999	PF0\PFG	AP8206501	**100010030 100010031 100010032**	**100030030 100030031**
Scarabeo	50	2000	2005	PFG00\TH000	AP8206501	**100010030 100010031 100010032**	**100030030 100030031**
Scarabeo 2T	50	2014	2014	THH00	4316255	**100010200 100010202**	**100030200 100030201**
Scarabeo 2T Eu2 Motore Piaggio	50	2010	2012	THG00	4316255	**100010200 100010202**	**100030200 100030201**
Scarabeo 2T Net	50	2009	2010	THG00	4316255	**100010200 100010202**	**100030200 100030201**
Scarabeo 4T	50	2002	2006	TG000	AP8570104	**100010320**	-
Scarabeo 4T 4V	50	2010	2012	TGE00	969428	**100010350**	-
Scarabeo 4T 4V	50	2014	2014	TGG00	969428	**100010350**	-
Scarabeo 4T 4V Net	50	2009	2010	TGE00	969428	**100010350**	-
Scarabeo 4T Restyling Eu3	50	2006	2009	TGA00\TGB00	969428	**100010350**	-
Scarabeo Quattro	50	2009	2009	TGE00	969428	**100010350**	-
Scarabeo Street	50	2005	2006	THE00	AP8540122	**100010200 100010202**	**100030200 100030201**



Modello *Model*	CC	Da *From*	A *To*	Telaio *Frame*	OEM	Codice RMS Standard *RMS Standard Code*	Codice RMS Racing *RMS Racing Code*
Scarabeo Street 2T Restyling	50	2006	2009	THG00	4316255	**100010200** **100010202**	**100030200** **100030201**
Sonic	50	1998	2007	PB000\TL000	AP8206501	**100010030** **100010031** **100010032**	**100030030** **100030031**
Sonic Gp	50	1998	2008	PB010\TLA00	AP8206802	**100010030** **100010031** **100010032**	**100030030** **100030031**
Sport City One 2T	50	2008	2011	SBA00\TCA00	875862	**100010200** **100010202**	**100030200** **100030201**
Sport City One 4T	50	2008	2010	SB000\SBC00	969428	**100010350**	-
Sr	50	1993	1993	GP\LB	AP8206221	**100010010** **100010011** **100010012**	**100030010** **100030011**
Sr	50	1994	1996	LF	AP8206501	**100010030** **100010031** **100010032**	**100030030** **100030031**
Sr Iniezione E Carburatore	50	2014	2014	VFB00\VFD00\VFU00	8269405	**100010310**	-
Sr Liquid Cooled	50	1994	1996	LC	AP8206501	**100010030** **100010031** **100010032**	**100030030** **100030031**
Sr Motard 2T	50	2012	2014	LBMC	875862	**100010200** **100010202**	**100030200** **100030201**
Sr Motard 4T 4V	50	2013	2014	CS5	969428	**100010350**	-
Sr R	50	2004	2009	VFB00\VFD00\VFJ\U	8269405	**100010310**	-
Sr R Factory Ie E Carburatore	50	2010	2014	VFB00\VFD00\VFU00	8269405	**100010310**	-
Sr Stealth	50	1997	2000	MZ	AP8206501	**100010030** **100010031** **100010032**	**100030030** **100030031**
Sr Street	50	2003	2012	TE000\TEA00	AP8515014	**100010310**	-
Sr Www	50	1997	2001	LYH00	AP8206501	**100010030** **100010031** **100010032**	**100030030** **100030031**
Tuono	50	2003	2004	SEA00	AP8206311	**100010050**	-
Scarabeo 4T	100	2001	2005	SA000\VA000	AP8551125	**100010420**	-
Scarabeo 4T	100	2010	2012	VAA00\VAC00	9699585	**100010420**	-
Scarabeo 4T	100	2014	2014	VAB00	969958	**100010420**	-
Scarabeo 4T Net	100	2009	2009	VAC\VAA	9699585	**100010420**	-
Scarabeo 4T Net Eu3	100	2010	2010	ZD4VAC\ZD4VAA	9699585	**100010420**	-
Scarabeo 4T Restyling	100	2006	2009	VAA00\VAC00	9699585	**100010420**	-
Atlantic Eu3	125	2010	2012	SPD00	8412985001	**100010480**	-
Atlantic Eu3 125-250	125	2006	2008	SPD00\SPE00	8412985001	**100010480**	-
Mojito	125	2008	2008	SZA00	8412985001	**100010480**	-
Scarabeo Motore Piaggio Eu3	125	2006	2006	TD005\TDA03	8412985001	**100010480**	-
Sport City Cube	125	2008	2010	VBE00\VBG00	8412985001	**100010480**	-
Sport City One 4T Euro3	125	2008	2011	SG000\SGC00	8412985001	**100010480**	-
Sport City Street	125	2012	2012	VBM00	8412985001	**100010480**	-
Sr Motard	125	2012	2014	LBMM7	8412985001	**100010480**	-
BENELLI							
491 Gt	50	1998	1999	BA0102	R12040021A0	**100010030** **100010031** **100010032**	**100030030** **100030031**
491 St	50	1999	2001	BA0102	R12040021A0	**100010030** **100010031** **100010032**	**100030030** **100030031**
K2	50	1998	2001	BA0105	R12040021A0	**100010030** **100010031** **100010032**	**100030030** **100030031**
Naked	50	2002	2002	ND0000P	R12040021A0	**100010030** **100010031** **100010032**	**100030030** **100030031**
Pepe	50	1999	2001	BA0301	R12040021A0	**100010030** **100010031** **100010032**	**100030030** **100030031**
Pepe Lx	50	2003	2004	SP0000P	R12040021A0	**100010030** **100010031** **100010032**	**100030030** **100030031**



ALBERI MOTORE

CRANKSHAFTS

Modello *Model*	CC	Da *From*	A *To*	Telaio *Frame*	OEM	Codice RMS Standard *RMS Standard Code*	Codice RMS Racing *RMS Racing Code*
DERBI							
Atlantis 2T	50	2010	2010	AL4AE2	4316255	**100010200 100010202**	**100030200 100030201**
Atlantis 2T Eu2	50	2007	2009	-	4316255	**100010200 100010202**	**100030200 100030201**
Atlantis 4T Eu2	50	2007	2007	-	969428	**100010350**	-
Atlantis 50-100 4T	50	2004	2006	AL1BE2\AT1B1A	969428	**100010350**	-
Atlantis O2	50	2002	2002	AL1A1A	4316255	**100010200 100010202**	**100030200 100030201**
Atlantis O2 Bullet	50	2003	2005	AL1AE2	4316255	**100010200 100010202**	**100030200 100030201**
Atlantis O2 City	50	2003	2006	AL1AE2	4316255	**100010200 100010202**	**100030200 100030201**
Atlantis O2 Red Bullet	50	2003	2003	AL1AE2	4316255	**100010200 100010202**	**100030200 100030201**
Atlantis O2 Two Chic	50	2005	2005	AL1AE2	4316255	**100010200 100010202**	**100030200 100030201**
Boulevard 2T	50	2009	2014	BR1A1A	4316255	**100010200 100010202**	**100030200 100030201**
Boulevard 4T Eu2 25 Km/H	50	2009	2009	-	969428	**100010350**	-
Gp1	50	2001	2002	PREDWB\PREDSB	4316255	**100010200 100010202**	**100030200 100030201**
Gp1	50	2003	2003	PREDXB	4316255	**100010200 100010202**	**100030200 100030201**
Sonar 2T	50	2009	2009	LR1A1A	4316255	**100010200 100010202**	**100030200 100030201**
Variant Sport 2T	50	2012	2012	SBA00	875862	**100010200 100010202**	**100030200 100030201**
Atlantis 50-100 4T	100	2004	2006	AL1BE2\AT1B1A	9699585	**100010420**	-
Boulevard 4T	100	2010	2011	M57A00	9699585	**100010420**	-
Boulevard 125-150 Eu2	125	2004	2007	-	8412985001	**100010480**	-
Boulevard 4T Eu3	125	2008	2012	VTHM571	8412985001	**100010480**	-
Gp1 Eu2	125	2006	2006	PS1A1A	8412985001	**100010480**	-
Gp1 Low Seat 125 Eu3	125	2007	2008	PS1B1A	8412985001	**100010480**	-
Rambla 125-250	125	2008	2009	RA1A1A\RA1B1A	8412985001	**100010480**	-
Rambla 125-250 E3 2Ver	125	2008	2008	RA1A\RA1B	8412985001	**100010480**	-
Sonar 4T	125	2009	2011	LS1A1A	8412985001	**100010480**	-
Variant Sport 4T E3	125	2012	2012	SG000	8412985001	**100010480**	-
Boulevard 4T E3	150	2010	2010	M57200	8412985001	**100010480**	-
Sonar 4T	150	2009	2009	LS3A1A	8412985001	**100010480**	-
GILERA							
Dna	50	2000	2002	C2700	4316255	**100010200 100010202**	**100030200 100030201**
Dna Gp Experience	50	2003	2004	C2700	4316255	**100010200 100010202**	**100030200 100030201**
Easy Moving	50	1995	1996	SSP2T	4316255	**100010200 100010202**	**100030200 100030201**
Ice	50	2001	2005	C3000	4316255	**100010200 100010202**	**100030200 100030201**
Runner	50	1997	2000	C1400	4316255	**100010200 100010202**	**100030200 100030201**
Runner Poggiali	50	2002	2002	C3620	4316255	**100010200 100010202**	**100030200 100030201**
Runner Purejet	50	2002	2004	C36100	8269405	**100010310**	-
Runner Purejet	50	2005	2007	C46200	8269405	**100010310**	-
Runner Purejet	50	2010	2011	C46200	8269405	**100010310**	-
Runner Purejet St	50	2008	2008	C46200	8269405	**100010310**	-
Stalker	50	1997	2004	C1300	4316255	**100010200 100010202**	**100030200 100030201**
Stalker	50	2005	2011	C40100	4316255	**100010200 100010202**	**100030200 100030201**
Stalker Naked	50	2008	2008	C40102	4316255	**100010200 100010202**	**100030200 100030201**
Stalker Special Edition	50	2007	2008	C40100	4316255	**100010200 100010202**	**100030200 100030201**



Modello *Model*	CC	Da *From*	A *To*	Telaio *Frame*	OEM	Codice RMS Standard *RMS Standard Code*	Codice RMS Racing *RMS Racing Code*
Storm	50	1994	1995	TEC1T	4316255	**100010200** **100010202**	**100030200** **100030201**
Storm Euro2	50	2007	2007	C29000	4316255	**100010200** **100010202**	**100030200** **100030201**
Typhoon	50	1994	1997	TEC1T	4316255	**100010200** **100010202**	**100030200** **100030201**
Typhoon X	50	1998	1999	TEC2T	4316255	**100010200** **100010202**	**100030200** **100030201**
Typhoon Xr	50	2000	2000	C1900	4316255	**100010200** **100010202**	**100030200** **100030201**
Nexus Euro3	125	2007	2008	M35500	8412985001	**100010480**	-
Runner 4T St Euro3	125	2008	2013	M46301	8412985001	**100010480**	-
Runner Vx	125	2005	2006	M46100	8412985001	**100010480**	-
Runner Vx 4T Euro3	125	2006	2007	M46300	8412985001	**100010480**	-
Runner Vx Race	125	2006	2006	M46100	8412985001	**100010480**	-
Runner Vx Sc	125	2006	2007	M46100	8412985001	**100010480**	-
HERCULES							
Reggae 50	50	1995	1995	427	-	-	**100030130**
Splinter 50	50	1995	1995	427	-	-	**100030130**
HONDA							
Sfx 50	50	1996	2000	AF37A	13000-GAV-700	**100010120**	-
Sgx 50 Sky	50	1997	2000	AF43G	13000-GBY-900	**100010110**	-
Sh 50 Scoopy	50	1996	2000	AF40A	13000-GBY-900	**100010110**	-
Sj 50 Bali	50	1995	1995	AF323	13000-GAV-700	**100010120**	-
Sj 50 Bali	50	1996	2001	AF32E	13000-GAV-700	**100010120**	-
Fes 125 A S-Wing Abs	125	2007	2010	JF12B	13000-KGF-910	**100010500**	-
Fes 125 Pantheon Cbs	125	2003	2007	JF12A	13000-KGF-910	**100010500**	-
Fes 125 S-Wing	125	2007	2010	JF12A	13000-KGF-910	**100010500**	-
Nes 125 @/ Arobase	125	2000	2000	JF07A	13000-KGF-910	**100010500**	-
Nes 125 @/ Arobase	125	2001	2003	JF07B	13000-KGF-910	**100010500**	-
Nes 125 @/ Arobase	125	2004	2006	JF07A	13000-KGF-910	**100010500**	-
Pes 125 Ps I	125	2006	2009	JF17A	13000-KGF-910	**100010500**	-
Ses 125 Dylan	125	2002	2006	JF10A	13000-KGF-910	**100010500**	-
Sh 125	125	2001	2004	JF09A	13000-KGF-910	**100010500**	-
Sh 125 D I	125	2009	2009	JF23A	13000-KGF-910	**100010500**	-
Sh 125 I	125	2005	2008	JF14A	13000-KGF-910	**100010500**	-
Sh 125 I	125	2009	2010	JF23B	13000-KGF-910	**100010500**	-
Fes 150 A S-Wing Abs	150	2007	2009	KF06B	13000-KGG-910	**100010520**	-
Fes 150 Pantheon	150	2003	2005	KF06A	13000-KGG-910	**100010520**	-
Fes 150 S-Wing	150	2007	2009	KF06A	13000-KGG-910	**100010520**	-
Nes 150 @/ Arobase	150	2000	2006	KF03A	13000-KGG-910	**100010520**	-
Nes 150 @/ Arobase	150	2001	2001	KF03B	13000-KGG-910	**100010520**	-
Pes 150 Ps I	150	2006	2010	KF09A	13000-KGG-910	**100010520**	-
Ses 150 Dylan	150	2002	2004	KF05A	13000-KGG-910	**100010520**	-
Sh 150	150	2001	2004	KF04A	13000-KGG-910	**100010520**	-
Sh 150 D I	150	2009	2011	KF10A	13000-KGG-910	**100010520**	-
Sh 150 I	150	2005	2008	KF08A	13000-KGG-910	**100010520**	-
KYMCO							
Agility 2T R16	50	2010	2010	C11000	00110201	**100010340**	-
Agility 2T R16	50	2012	2012	C11000	00110201	**100010340**	-
Agility 4T Carry	50	2011	2011	U65010	00101068	**100010470**	-
Agility 4T R10	50	2006	2006	U60010	00103629	**100010470**	-
Agility 4T R10	50	2007	2008	U60080	00103629	**100010470**	-
Agility 4T R12	50	2007	2008	U60050	00103629	**100010470**	-
Agility 4T R16	50	2008	2009	C10000	00101068	**100010470**	-
Agility 4T R16	50	2012	2012	C10000	00101068	**100010470**	-
Agility Plus 2T	50	2014	2014	13000	00110201	**100010340**	-
Agility Plus 4T	50	2014	2014	12000	00101068	**100010470**	-
Agility R12	50	2005	2005	U60000	00103629	**100010470**	-
Agility R12 Ecs	50	2016	2016	U68000	00101068	**100010470**	-



Modello *Model*	**CC**	**Da** *From*	**A** *To*	**Telaio** *Frame*	**OEM**	**Codice RMS Standard** *RMS Standard Code*	**Codice RMS Racing** *RMS Racing Code*
Agility Rs	50	2009	2009	U600B0	00101068	**100010470**	-
Agility Rs Naked 2T	50	2010	2010	U10000	00110201	**100010340**	-
B&W	50	2002	2002	S80000	00110201	**100010340**	-
B&W Euro2	50	2003	2003	S80010	00110201	**100010340**	-
Dink Classic Euro2	50	2003	2003	T80000	00110201	**100010340**	-
Dink Lc	50	1998	2002	SH10	00110201	**100010340**	-
Filly	50	1998	2000	SD10AC	00103629	**100010470**	-
Filly Lx	50	2001	2002	S21000	00103629	**100010470**	-
Heroism	50	1995	1997	SE10BA	00110201	**100010340**	-
Like 2T	50	2009	2009	D10000	00110201	**100010340**	-
Like 4T	50	2009	2009	D11000	00101068	**100010470**	-
People	50	1999	2000	B10001	00110201	**100010340**	-
People	50	2004	2004	BA10AG	00110201	**100010340**	-
People Euro2	50	2003	2003	B10020	00110201	**100010340**	-
People Euro2	50	2008	2008	B10020	00110201	**100010340**	-
People Euro2	50	2011	2011	B10020	00110201	**100010340**	-
People S	50	2005	2008	B90000	00110201	**100010340**	-
People S 4T	50	2006	2008	B91000	00101068	**100010470**	-
Sento	50	2008	2008	U80000	00101068	**100010470**	-
Sniper	50	1993	1993	PR50B	00110201	**100010340**	-
Sniper Dd	50	1994	1996	PR50BB	00110201	**100010340**	-
Super 8	50	2007	2007	U70000	00103629	**100010470**	-
Super 8 2T	50	2009	2009	U90000	00113052	**100010340**	-
Super 8 2T	50	2013	2013	U91000	00110201	**100010340**	-
Super 8 4T	50	2009	2009	U70300	00101068	**100010470**	-
Super 8 4T	50	2013	2013	U71000	00101068	**100010470**	-
Super 9	50	2000	2000	S10000	00110201	**100010340**	-
Super 9 Sport Euro2	50	2003	2004	S10020	00110201	**100010340**	-
Top Boy	50	1997	2000	SF10AG\SF10AF	00110201	**100010340**	-
Vitality 2T	50	2004	2004	U30000	00110201	**100010340**	-
Yup	50	2002	2002	S60000	00110201	**100010340**	-
Yup Euro2	50	2003	2003	S60010	00110201	**100010340**	-
MALAGUTI							
Centro Base	50	1993	1994	36	77111700	**100010030** **100010031** **100010032**	**100030030** **100030031**
Centro Sl	50	1994	1998	36T	77111700	**100010030** **100010031** **100010032**	**100030030** **100030031**
Centro Sl Kat	50	1999	2000	4900000	77111700	**100010030** **100010031** **100010032**	**100030030** **100030031**
Ciak	50	1999	2000	5200000	77116000	**100010030** **100010031** **100010032**	**100030030** **100030031**
Ciak Master	50	2004	2004	-	77116000	**100010030** **100010031** **100010032**	**100030030** **100030031**
Ciak Master Euro 2	50	2006	2006	64000	77120500	**100010030** **100010031** **100010032**	**100030030** **100030031**
Ciak Mono Euro 2	50	2003	2003	-	77116000	**100010030** **100010031** **100010032**	**100030030** **100030031**
F10 Jet Line	50	1992	1998	35	77111700	**100010030** **100010031** **100010032**	**100030030** **100030031**
F10 Kat	50	1999	2000	48	77111700	**100010030** **100010031** **100010032**	**100030030** **100030031**
F10 Restyling Eu1	50	2001	2002	48	77116000	**100010030** **100010031** **100010032**	**100030030** **100030031**



Modello *Model*	**CC**	**Da** *From*	**A** *To*	**Telaio** *Frame*	**OEM**	**Codice RMS Standard** *RMS Standard Code*	**Codice RMS Racing** *RMS Racing Code*
F10 Restyling Eu2-2.3	50	2003	2004	48\48000	77116000	**100010030** **100010031** **100010032**	**100030030** **100030031**
F10 Restyling Euro2	50	2002	2003	48000	77116000	**100010030** **100010031** **100010032**	**100030030** **100030031**
F10 Restyling Euro2	50	2006	2006	48000	77120500	**100010030** **100010031** **100010032**	**100030030** **100030031**
F12 Aria Restyling Euro 2	50	2006	2006	46000	77116000	**100010030** **100010031** **100010032**	**100030030** **100030031**
F12 Lc Restyling Euro 2	50	2006	2006	62000	77120500	**100010030** **100010031** **100010032**	**100030030** **100030031**
F12 Phantom	50	1994	1998	40	77111700	**100010030** **100010031** **100010032**	**100030030** **100030031**
F12 Phantom Euro1	50	1999	2000	4600000	77111700	**100010030** **100010031** **100010032**	**100030030** **100030031**
F12 Phantom Lc	50	1994	1998	41	77111700	**100010030** **100010031** **100010032**	**100030030** **100030031**
F12 Phantom Lc Euro1	50	1999	2000	4700000	77116200	**100010330**	-
F12 Phantom Lc Restyling Eu1	50	2001	2002	4700000	77116200	**100010330**	-
F12 Phantom Lc Restyling Eu2	50	2002	2002	6200000	77116200	**100010330**	-
F12 Phantom Lc Restyling Eu2-2.3	50	2003	2004	6200000	77116200	**100010330**	-
F12 Phantom Lc Twin Disks	50	1998	1998	41	77111700	**100010030** **100010031** **100010032**	**100030030** **100030031**
F12 Phantom Restyling Eu1	50	2001	2002	4600000	77116000	**100010030** **100010031** **100010032**	**100030030** **100030031**
F12 Phantom Restyling Eu2	50	2002	2002	4600000	77111700	**100010030** **100010031** **100010032**	**100030030** **100030031**
F12 Phantom Restyling Eu2-2.3	50	2003	2004	4600000	77116000	**100010030** **100010031** **100010032**	**100030030** **100030031**
F12R Phantom Ac	50	2007	2010	830201	59012200	**100010040**	-
F12R Phantom Lc	50	2007	2010	8201	77120500	**100010030** **100010031** **100010032**	**100030030** **100030031**
F15 Fire Fox	50	1996	1998	44	77111700	**100010030** **100010031** **100010032**	**100030030** **100030031**
F15 Fire Fox Air Cooled	50	2005	2006	73K20173	77116000	**100010030** **100010031** **100010032**	**100030030** **100030031**
F15 Fire Fox Euro2	50	2002	2003	44	77116000	**100010030** **100010031** **100010032**	**100030030** **100030031**
F15 Fire Fox Restyling Euro2-2.3	50	2003	2004	44	77116000	**100010030** **100010031** **100010032**	**100030030** **100030031**
F15 Fire Fox Twin Disks & Special	50	1998	1999	44	77111700	**100010030** **100010031** **100010032**	**100030030** **100030031**
F15 Fire Fox Twin Disks Digit Kat	50	1998	2000	4400000	77111700	**100010030** **100010031** **100010032**	**100030030** **100030031**
F15 Lc Restyling Euro 2	50	2004	2005	44000044	77120500	**100010030** **100010031** **100010032**	**100030030** **100030031**
F15 Lc-Tds Restyling Euro 1	50	2001	2001	4400000	77111700	**100010030** **100010031** **100010032**	**100030030** **100030031**
Yesterday - Yesterday Euro	50	1997	2000	45	77111700	**100010030** **100010031** **100010032**	**100030030** **100030031**



ALBERI MOTORE

CRANKSHAFTS

Modello *Model*	**CC**	**Da** *From*	**A** *To*	**Telaio** *Frame*	**OEM**	**Codice RMS Standard** *RMS Standard Code*	**Codice RMS Racing** *RMS Racing Code*
MBK							
Cs Mach G Euro1	50	2002	2003	5RW	4CUE14003100	**100010030 100010031 100010032**	**100030030 100030031**
Cs Mach G Euro2	50	2002	2004	5RW	4CUE14003100	**100010030 100010031 100010032**	**100030030 100030031**
Cw Booster	50	1990	1991	3WW	3VLE14001000	**100010010 100010011 100010012**	**100030010 100030011**
Cw Booster	50	2001	2002	5NT	3VLE14001000	**100010010 100010011 100010012**	**100030010 100030011**
Cw Booster (Ita)	50	1992	1994	3WW	3VLE14001000	**100010010 100010011 100010012**	**100030010 100030011**
Cw Booster Naked	50	2003	2003	1D12	3VLE14001000	**100010010 100010011 100010012**	**100030010 100030011**
Cw Booster Spirit	50	1996	1998	4VU	3VLE14001000	**100010010 100010011 100010012**	**100030010 100030011**
Cw Booster Spirit (Ita)	50	1999	1999	4VU9	3VLE14001000	**100010010 100010011 100010012**	**100030010 100030011**
Cw Booster Spirit (Ita)	50	2000	2000	5LE\5MM	3VLE14001000	**100010010 100010011 100010012**	**100030010 100030011**
Cw Booster Spirit Euro2	50	2002	2002	5RH2	3VLE14001000	**100010010 100010011 100010012**	**100030010 100030011**
Cw Booster Spirit Euro2	50	2003	2003	5XW\5XX	3VLE14001000	**100010010 100010011 100010012**	**100030010 100030011**
Cw L Booster	50	2001	2003	5SX	3VLE14001000	**100010010 100010011 100010012**	**100030010 100030011**
Cw L Booster Spirit	50	2003	2003	5XY2\5YA2	3VLE14001000	**100010010 100010011 100010012**	**100030010 100030011**
Cw R Booster Road (Ita)	50	1994	1995	4PA1	3VLE14001000	**100010010 100010011 100010012**	**100030010 100030011**
Cw Rs Booster Ng	50	2001	2002	5NU	3VLE14001000	**100010010 100010011 100010012**	**100030010 100030011**
Cw Rs Booster Ng (Ita)	50	1995	1998	4SB	3VLE14001000	**100010010 100010011 100010012**	**100030010 100030011**
Cw Rs Booster Ng (Ita)	50	1999	1999	5FX2	3VLE14001000	**100010010 100010011 100010012**	**100030010 100030011**
Cw Rs Booster Ng Euro1	50	1999	2000	5LF	3VLE14001000	**100010010 100010011 100010012**	**100030010 100030011**
Cw Rsp Booster Rocket (Ita)	50	1997	1998	4UP	3VLE14001000	**100010010 100010011 100010012**	**100030010 100030011**
Cw Rsx Booster Track (Ita)	50	1996	1998	4YB	3VLE14001000	**100010010 100010011 100010012**	**100030010 100030011**
Cw Sp Booster Spirit Euro2	50	2002	2002	5RY2	3VLE14001100	**100010010 100010011 100010012**	**100030010 100030011**
Ew Stunt	50	2000	2002	5LH	3VLE14001000	**100010010 100010011 100010012**	**100030010 100030011**
Ya R Forte (Che-Ita)	50	1994	1996	4PC	5RNE14001100	**100010030 100010031 100010032**	**100030030 100030031**



Modello *Model*	CC	Da *From*	A *To*	Telaio *Frame*	OEM	Codice RMS Standard *RMS Standard Code*	Codice RMS Racing *RMS Racing Code*
Ye Evolis (Ita)	50	1992	1995	4EF	4CUE14002000	**100010030** **100010031** **100010032**	**100030030** **100030031**
Yh Flipper	50	1998	1998	5EU	4CUE14002000	**100010030** **100010031** **100010032**	**100030030** **100030031**
Yh Flipper	50	2001	2002	5PF	4CUE14002000	**100010030** **100010031** **100010032**	**100030030** **100030031**
Yh Flipper Catalitico	50	1999	2000	5LD	5RNE14001100	**100010030** **100010031** **100010032**	**100030030** **100030031**
Yh Flipper Euro2	50	2003	2004	5UB	5RNE14001100	**100010030** **100010031** **100010032**	**100030030** **100030031**
Ym Fizz (Ita)	50	1994	1995	4KH	4CUE14002000	**100010030** **100010031** **100010032**	**100030030** **100030031**
Yn R Ovetto (Che-Ita)	50	1997	2001	5AD\5MR	5RNE14001100	**100010030** **100010031** **100010032**	**100030030** **100030031**
Yn R Ovetto Euro1	50	2002	2004	5RN	5RNE14001100	**100010030** **100010031** **100010032**	**100030030** **100030031**
Yn R Ovetto Euro2	50	2002	2003	5RN	4CUE14003100	**100010030** **100010031** **100010032**	**100030030** **100030031**
Yq L Nitro Jaguar	50	2004	2004	5SB9	5RNE14000000	**100010030** **100010031** **100010032**	**100030030** **100030031**
Yq Nitro	50	2001	2002	5PE	4CUE14002000	**100010030** **100010031** **100010032**	**100030030** **100030031**
Yq Nitro	50	2004	2004	5SB	5RNE14000000	**100010030** **100010031** **100010032**	**100030030** **100030031**
Yq Nitro (Ita)	50	1997	1998	5BR	4CUE14002000	**100010030** **100010031** **100010032**	**100030030** **100030031**
Yq Nitro (Ita)	50	1999	2000	5LC	4CUE14002000	**100010030** **100010031** **100010032**	**100030030** **100030031**
Yq Nitro Euro2	50	2003	2003	5SB	5RNE14001100	**100010030** **100010031** **100010032**	**100030030** **100030031**
PEUGEOT							
Buxy 50	50	1995	1997	VGA 427	-	**-**	**100030130**
Buxy 50 Rs	50	1996	1997	VGA 427	-	**-**	**100030130**
Citystar 50	50	2014	2015	-	-	**100010400**	**-**
Citystar 50 Rs	50	2015	2015	-	-	**100010400**	**-**
Django 50 2T Allure	50	2015	2017	-	-	**100010400**	**-**
Django 50 2T Evasion	50	2015	2017	-	-	**100010400**	**-**
Django 50 2T Heritage	50	2015	2017	-	-	**100010400**	**-**
Django 50 2T Sport	50	2015	2017	-	-	**100010400**	**-**
Elyseo 50 45 Km/H	50	2002	2003	VGA G1AAE	-	**-**	**100030130**
Elyseo 50 50 Km/H	50	1998	2001	VGA G1AAK	-	**-**	**100030130**
Jet Force 50 C-Tech	50	2005	2006	VGA A1AAAA	-	**100010400**	**-**
Jet Force 50 C-Tech	50	2007	2009	VGA A1AABA	-	**100010400**	**-**
Jet Force 50 C-Tech Rally Victories	50	2006	2007	VGA A1AAAA	-	**100010400**	**-**
Jet Force 50 C-Tech Rcup	50	2007	2009	VGA A1AABA	-	**100010400**	**-**
Jet Force 50 Darkside	50	2008	2015	VGA A1AABA	-	**100010400**	**-**
Jet Force 50 Ice Blade	50	2010	2012	VGA A1AABA	-	**100010400**	**-**
Jet Force 50 Tsdi	50	2003	2007	VGA A1AAJA	-	**100010400**	**-**
Jet Force 50 Tsdi Sbc	50	2003	2006	VGA A1AAJB	-	**100010400**	**-**
Kisbee 50 2T	50	2014	2015	-	-	**100010400**	**-**
Kisbee 50 2T Streetzone	50	2014	2014	-	-	**100010400**	**-**
Looxor 50	50	2002	2002	VGA B1AAAA	-	**-**	**100030130**



ALBERI MOTORE

CRANKSHAFTS

Modello *Model*	**CC**	**Da** *From*	**A** *To*	**Telaio** *Frame*	**OEM**	**Codice RMS Standard** *RMS Standard Code*	**Codice RMS Racing** *RMS Racing Code*
Ludix 50 Classic 1 Seater	50	2004	2007	VGA L1AABM/EM	-	**100010400**	-
Ludix 50 Classic 2 Seater	50	2006	2007	VGA L1AAEA	-	**100010400**	-
Ludix 50 Elegance	50	2004	2007	VGA L1AABA/EA	-	**100010400**	-
Ludix 50 Ep	50	2008	2011	-	-	**100010400**	-
Ludix 50 Ii Dt One Luxe 2 Sitzer	50	2008	2011	VGA L1AADA	-	**100010400**	-
Ludix 50 Ii Elegance	50	2008	2011	VGA L1AAEA	-	**100010400**	-
Ludix 50 Ii Lc Blaster Ice Blade	50	2010	2011	VGA L1ACFA	-	**100010400**	-
Ludix 50 Ii Lc Blaster Rs12	50	2008	2011	VGA L1ACFA	-	**100010400**	-
Ludix 50 Ii Snake Furious	50	2008	2011	VGA L1AAFA	-	**100010400**	-
Ludix 50 Ii Snake Naked 10 Inch	50	2008	2011	-	-	**100010400**	-
Ludix 50 Ii Trend 12 Inch	50	2008	2011	VGA L1AAFA	-	**100010400**	-
Ludix 50 Ii Tt One 1 Sitzer	50	2008	2011	VGA L1AADM	-	**100010400**	-
Ludix 50 Ii Tt One 2 Sitzer	50	2008	2012	VGA L1AADA	-	**100010400**	-
Ludix 50 Lc Blaster 10 Zoll	50	2005	2007	VGA L1ACCA	-	**100010400**	-
Ludix 50 Lc Rs Blaster 12 Zoll	50	2007	2007	-	-	**100010400**	-
Ludix 50 One 1 Sitzer	50	2004	2007	VGA L1AAAM/DM	-	**100010400**	-
Ludix 50 One 2 Sitzer	50	2006	2007	VGA L1AADA	-	**100010400**	-
Ludix 50 Pro 2T	50	2008	2011	-	-	**100010400**	-
Ludix 50 Snake	50	2004	2007	VGA L1AAACA/FA	-	**100010400**	-
Ludix 50 Trend 10 Inch	50	2004	2007	VGA L1AAAAA	-	**100010400**	-
Speedake 50	50	1995	1997	VGA 427	-	-	**100030130**
Speedfight 1 50 Ac Dt	50	1997	1998	VGA S1B00A	-	-	**100030130**
Speedfight 1 50 Ac Dt	50	1999	2000	VGA S1B0KA	-	-	**100030130**
Speedfight 1 50 Lc Dd	50	1999	1999	VGA S1B0KB	-	-	**100030130**
Speedfight 1 50 Lc Dd	50	1999	2000	VGA S1B0KB	-	-	**100030130**
Speedfight 1 50 Lc Dt	50	1997	1998	VGA S1B00B	-	-	**100030130**
Speedfight 2 50 Ac Dt	50	2001	2001	VGA S1B0KA	-	-	**100030130**
Speedfight 2 50 Ac Dt	50	2002	2002	VGA S1BACA	-	-	**100030130**
Speedfight 2 50 Lc Dd	50	2001	2001	VGA S1B0KB	-	-	**100030130**
Speedfight 2 50 Lc Dd	50	2002	2002	VGA S1B0EB	-	-	**100030130**
Speedfight 2 50 Lc Dd	50	2004	2004	VGA S1BBAA	-	-	**100030130**
Speedfight 2 50 Lc Dd X-Race	50	2001	2001	VGA S1B0KB	-	-	**100030130**
Speedfight 2 50 Lc Dd X-Race	50	2002	2002	VGA S1B0EB	-	-	**100030130**
Speedfight 3 50 Ac Dt	50	2009	2009	VGA F1AAAA	-	**100010400**	-
Speedfight 3 50 Ac Dt	50	2010	2015	-	-	**100010400**	-
Speedfight 3 50 Ac Dt Darkside	50	2011	2015	-	-	**100010400**	-
Speedfight 3 50 Ac Dt Furious	50	2014	2014	-	-	**100010400**	-
Speedfight 3 50 Ac Dt Ice Blade	50	2011	2015	-	-	**100010400**	-
Speedfight 3 50 Ac Dt Musik	50	2011	2011	-	-	**100010400**	-
Speedfight 3 50 Ac Dt Rs	50	2010	2011	-	-	**100010400**	-
Speedfight 3 50 Ac Dt Team	50	2011	2011	-	-	**100010400**	-
Speedfight 3 50 Lc Dd	50	2009	2009	VGA F1ABAA	-	**100010400**	-
Speedfight 3 50 Lc Dd	50	2010	2011	-	-	**100010400**	-
Speedfight 3 50 Lc Dd Darkside	50	2011	2011	-	-	**100010400**	-
Speedfight 3 50 Lc Dd Ice Blade	50	2011	2015	-	-	**100010400**	-
Speedfight 3 50 Lc Dd Rs	50	2010	2011	-	-	**100010400**	-
Speedfight 3 50 Lc Dd Team	50	2011	2011	-	-	**100010400**	-
Speedfight 4 50 Ac Dt	50	2015	2017	-	-	**100010400**	-
Speedfight 4 50 Ac Dt Darkside	50	2015	2017	-	-	**100010400**	-
Speedfight 4 50 Ac Dt Ice Blade	50	2015	2017	-	-	**100010400**	-
Speedfight 4 50 Ac Dt Pure	50	2015	2017	-	-	**100010400**	-
Squab 50	50	1996	1997	VGA S1A03	-	-	**100030130**
Tkr 50	50	2001	2001	VGA S1A0KB	-	-	**100030130**
Tkr 50	50	2002	2002	VGA S1A0KF	-	-	**100030130**
Tkr 50 Metal-X	50	2002	2002	VGA S1A0KF	-	-	**100030130**
Tkr 50 Streetboard	50	2001	2001	VGA S1A0KB	-	-	**100030130**
Trekker 50 Off Road	50	1998	2000	VGA S1A0KB	-	-	**100030130**
Trekker 50 Road	50	1998	2000	VGA S1A0KB	-	-	**100030130**



Modello *Model*	CC	Da *From*	A *To*	Telaio *Frame*	OEM	Codice RMS Standard *RMS Standard Code*	Codice RMS Racing *RMS Racing Code*
Trekker 50 Streetboard	50	1999	2000	VGA S1A0KB	-	-	**100030130**
Vivacity 50	50	1999	2001	VGA S1C0KA	-	-	**100030130**
Vivacity 50	50	2002	2002	VGA S1C0KF	-	-	**100030130**
Vivacity 50 3 2T New	50	2008	2017	-	-	**100010400**	-
Vivacity 50 3 2T New Sportline	50	2011	2012	-	-	**100010400**	-
Vivacity 50 Sportline	50	2001	2001	VGA S1C0KA	-	-	**100030130**
Vivacity 50 Sportline 2	50	2002	2002	VGA S1C0KF	-	-	**100030130**
Zenith 50 Lm	50	1996	1997	VGA 441	-	-	**100030130**
Zenith 50 Ln	50	1998	1998	VGA 441	-	-	**100030130**
Zenith 50 M	50	1995	1997	VGA 441	-	-	**100030130**
Zenith 50 N	50	1998	2000	VGA 441	-	-	**100030130**
PIAGGIO							
Ape	50	2009	2016	C8000	8462675	**100010410**	-
Ape Mix 2T	50	1998	2008	C8000	8462675	**100010410**	-
Bravo Erre 2	50	1975	1981	EEM1T\EEV1T	1841545	**100010211**	-
Bravo Erre 2	50	1975	1981	EEM1T\EEV1T	113708	**100010221**	-
Ciao	50	1980	1988	C7E2T\C7V4T	1841545	**100010211**	-
Ciao	50	1980	1988	C7E2T\C7V4T	113708	**100010221**	-
Ciao Euro1	50	1999	2001	C2400	1841545	**100010211**	-
Ciao Euro1	50	1999	2001	C2400	113708	**100010221**	-
Ciao Euro2	50	2002	2004	C2412	1841545	**100010211**	-
Ciao Euro2	50	2002	2004	C2412	113708	**100010221**	-
Ciao Tre	50	1971	1999	CT31T	1841545	**100010211**	-
Ciao Tre	50	1971	1999	CT31T	113708	**100010221**	-
Diesis	50	2001	2001	C3400	4316255	**100010200** **100010202**	**100030200** **100030201**
FLy 4T	50	2005	2007	C44200	969428	**100010350**	-
FLy 4T & 25-30 Km/H	50	2008	2011	C44500	969428	**100010350**	-
FLy 4T 2V	50	2013	2015	RP8C523	969428	**100010350**	-
FLy 4T 2V 25-30Km-H	50	2012	2014	RP8C522	969428	**100010350**	-
FLy 4T 4V	50	2012	2013	RP8C521	969428	**100010350**	-
FLy 4T Motore Chn	50	2006	2007	C44500	969428	**100010350**	-
Free	50	1992	1994	FCS1T	4316255	**100010200** **100010202**	**100030200** **100030201**
Free Delivery	50	2000	2001	FCS2T	4316255	**100010200** **100010202**	**100030200** **100030201**
Free FL	50	1995	2002	FCS2T	4316255	**100010200** **100010202**	**100030200** **100030201**
Grillo	50	1989	1993	CXM\CXV	1841545	**100010211**	-
Grillo	50	1989	1993	CXM\CXV	113708	**100010221**	-
Liberty	50	1997	2005	C1500	4316255	**100010200** **100010202**	**100030200** **100030201**
Liberty 2T	50	2006	2006	C42100	4316255	**100010200** **100010202**	**100030200** **100030201**
Liberty 2T	50	2007	2008	C42500	4316255	**100010200** **100010202**	**100030200** **100030201**
Liberty 2T Rst	50	2004	2004	C42100	4316255	**100010200** **100010202**	**100030200** **100030201**
Liberty 2T Sport	50	2007	2008	C42501	4316255	**100010200** **100010202**	**100030200** **100030201**
Liberty 4T	50	2000	2002	C2800	969203	**100010320**	-
Liberty 4T	50	2005	2008	C42400	969428	**100010350**	-
Liberty 4T Delivery - SinGLe	50	2010	2014	C42401	969428	**100010350**	-
Liberty 4T Delivery Tnt	50	2009	2009	C42401	969428	**100010350**	-
Liberty 4T Ptt - Double - Nexive	50	2009	2015	C42402\C42404	969428	**100010350**	-
Liberty 4T Ptt (Deu)	50	2007	2012	C42406	969428	**100010350**	-
Liberty 4T Rst	50	2004	2004	C42200	969428	**100010350**	-
Liberty 4T Sport	50	2006	2008	C42405	969428	**100010350**	-
Liberty Iget 4T 3V 25Km/H	50	2016	2016	-	969428	**100010350**	-
Liberty Iget 4T 3V Ie	50	2015	2016	RP8C54100	969428	**100010350**	-



ALBERI MOTORE

CRANKSHAFTS

Modello *Model*	CC	Da *From*	A *To*	Telaio *Frame*	OEM	Codice RMS Standard *RMS Standard Code*	Codice RMS Racing *RMS Racing Code*
Liberty Moc 2T & Elle	50	2009	2013	C49100	4316255	**100010200** **100010202**	**100030200** **100030201**
Liberty Moc 4T & Elle	50	2009	2016	C49200	969428	**100010350**	-
Liberty Ptt Eu2	50	2004	2005	C37401	4316255	**100010200** **100010202**	**100030200** **100030201**
Nrg	50	1994	1996	SAL1T	4316255	**100010200** **100010202**	**100030200** **100030201**
Nrg Extreme	50	1999	2000	-	4316255	**100010200** **100010202**	**100030200** **100030201**
Nrg Mc3	50	2001	2004	C320\210	4316255	**100010200** **100010202**	**100030200** **100030201**
Nrg Power Dt	50	2006	2015	C45300	4316255	**100010200** **100010202**	**100030200** **100030201**
Nrg Power Purejet	50	2004	2006	C45200	8269405	**100010310**	-
Nrg Power Purejet	50	2010	2011	C45200	8269405	**100010310**	-
Nrg Purejet	50	2002	2004	C320001	8269405	**100010310**	-
Nrg Purejet	50	2010	2010	C45200	8269405	**100010310**	-
Nrg Rst Mc2	50	1996	1998	C04000	4316255	**100010200** **100010202**	**100030200** **100030201**
Ntt	50	1995	1996	SAL1T	4316255	**100010200** **100010202**	**100030200** **100030201**
Quartz	50	1992	1996	NSP1T	4316255	**100010200** **100010202**	**100030200** **100030201**
Sfera	50	1991	1993	NSL1T	4316255	**100010200** **100010202**	**100030200** **100030201**
Sfera Maquillage 2	50	1994	1994	SM51T	4316255	**100010200** **100010202**	**100030200** **100030201**
Sfera Rst	50	1995	1997	C0100	4316255	**100010200** **100010202**	**100030200** **100030201**
Si	50	1979	1988	SIM1T\SIV1T	1841545	**100010211**	-
Si	50	1979	1988	SIM1T\SIV1T	113708	**100010221**	-
Si FL2	50	1991	1997	SRM1T\SRV1T	1841545	**100010211**	-
Si FL2	50	1991	1997	SRM1T\SRV1T	113708	**100010221**	-
Typhoon	50	2001	2008	C29000	4316255	**100010200** **100010202**	**100030200** **100030201**
Vespa 50	50	1963	1967	V5A1T	123292	**100010230**	-
Vespa 50	50	1967	1971	VA51T	123292	**100010230**	-
Vespa 50 FL	50	1990	1990	V5N1	224587	**100010240**	-
Vespa 50 L	50	1966	1970	V5A1T	123292	**100010230**	-
Vespa 50 N	50	1963	1971	V5A1T	123292	**100010230**	-
Vespa 50 R	50	1969	1971	V5A1T	123292	**100010230**	-
Vespa 50 S	50	1963	1968	V5SA1T	123292	**100010230**	-
Vespa 50 Special	50	1970	1972	V5A2T	123292	**100010230**	-
Vespa 50 Special	50	1972	1975	V5B1T	123292	**100010230**	-
Vespa 50 Special	50	1975	1983	V5B3T	123292	**100010230**	-
Vespa 50 Special Elestart	50	1970	1972	V5A3T	123292	**100010230**	-
Vespa 50 Special Elestart	50	1972	1975	V5B2T	123292	**100010230**	-
Vespa 50 Special Elestart	50	1975	1976	V5B4T	123292	**100010230**	-
Vespa ET2	50	1997	2005	C1600\38100	4316255	**100010200** **100010202**	**100030200** **100030201**
Vespa ET4	50	2000	2005	C26100	969203	**100010320**	-
Vespa LX 2T	50	2005	2013	C38101	4316255	**100010200** **100010202**	**100030200** **100030201**
Vespa LX 2T Touring & 30Km	50	2010	2013	C38101	4316255	**100010200** **100010202**	**100030200** **100030201**
Vespa LX 4T	50	2005	2009	C38300	969428	**100010350**	-
Vespa LX 4T-4V	50	2009	2013	C38700	969428	**100010350**	-
Vespa LX 4T-4V Touring	50	2010	2013	C38700	969428	**100010350**	-
Vespa LXV 2T	50	2006	2009	C38102	4316255	**100010200** **100010202**	**100030200** **100030201**
Vespa LXV 2T Navy	50	2008	2008	C38102	4316255	**100010200** **100010202**	**100030200** **100030201**
Vespa PK 50	50	1982	1984	V5X1T	224587	**100010240**	-
Vespa PK 50 1° Serie	50	1982	1984	V5X1T	123292	**100010230**	-



Modello *Model*	CC	Da *From*	A *To*	Telaio *Frame*	OEM	Codice RMS Standard *RMS Standard Code*	Codice RMS Racing *RMS Racing Code*
Vespa PK 50 N	50	1990	1990	V5X5	224587	**100010240**	-
Vespa PK 50 S	50	1982	1982	V5X2T	123292	**100010230**	-
Vespa PK 50 SS	50	1983	1983	V5S1T	123292	**100010230**	-
Vespa PK 50 XL	50	1985	1988	V5X3T	224587	**100010240**	-
Vespa PK 50 XL Rush	50	1988	1989	V5X4T	224587	**100010240**	-
Vespa Primavera 2T	50	2013	2016	C53200	4316255	**100010200** **100010202**	**100030200** **100030201**
Vespa Primavera 4T-4V	50	2013	2016	C53100	969428	**100010350**	-
Vespa S 2T & College	50	2007	2012	C38103	4316255	**100010200** **100010202**	**100030200** **100030201**
Vespa S 4T-4V & College	50	2008	2012	M38600	969428	**100010350**	-
Vespa Sprint 2T 2V	50	2014	2016	C53201	4316255	**100010200** **100010202**	**100030200** **100030201**
Vespa Sprint 4T 4V	50	2014	2016	C53101	969428	**100010350**	-
Vespa Sprinter	50	1971	1973	V5SS2T	123292	**100010230**	-
Vespa SS 50	50	1965	1971	V5SS1T	123292	**100010230**	-
Zip	50	1992	1993	SSL1T	4316255	**100010200** **100010202**	**100030200** **100030201**
Zip	50	1995	1996	SSP2T	4316255	**100010200** **100010202**	**100030200** **100030201**
Zip	50	2000	2004	C25000	4316255	**100010200** **100010202**	**100030200** **100030201**
Zip 4T	50	2000	2005	C25000	969203	**100010320**	-
Zip 4T	50	2006	2013	LBMC25C	969428	**100010350**	-
Zip 4T (Modello Euro 2)	50	2000	2005	C25000	969428	**100010350**	-
Zip 4T 25Km-H	50	2006	2016	-	969428	**100010350**	-
Zip Bimodale	50	1994	1997	BMZ1T	4316255	**100010200** **100010202**	**100030200** **100030201**
Zip Fast Raider	50	1993	1994	SSP1T	4316255	**100010200** **100010202**	**100030200** **100030201**
Zip Fast Raider Rst	50	1996	1997	C0700	4316255	**100010200** **100010202**	**100030200** **100030201**
Zip Rst	50	1996	1999	C0600	4316255	**100010200** **100010202**	**100030200** **100030201**
Zip Sp	50	1996	2000	C1100	4316255	**100010200** **100010202**	**100030200** **100030201**
FLy 4T	100	2006	2008	M53100	969958	**100010420**	-
FLy 4T	100	2008	2008	M53100	9699585	**100010420**	-
Free	100	2002	2003	M2910	9699645	**100010420**	-
Zip 4T	100	2006	2010	M25200	969958	**100010420**	-
Beverly	125	2001	2003	M2810\M2820	8412985001	**100010480**	-
Beverly Euro 3	125	2007	2008	M28900	8412985001	**100010480**	-
Beverly Euro 3 Mic	125	2007	2007	M28900	8412985001	**100010480**	-
Beverly Euro 3 Sport	125	2007	2008	M28900	8412985001	**100010480**	-
Beverly Rst	125	2004	2005	M28400	8400935001	**100010480**	-
Beverly Rst	125	2005	2007	M28400	8412985001	**100010480**	-
Beverly Tourer Euro3	125	2007	2010	M28901	8412985001	**100010480**	-
Carnaby	125	2007	2010	M60200	8412985001	**100010480**	-
FLy	125	2005	2007	M42100	8412985001	**100010480**	-
FLy 4T 3V Ie E3 Dt	125	2013	2015	-	8805270001	**100010490**	-
FLy 4T 3V Ie Euro3 Lem	125	2012	2013	RP8M791	8805270001	**100010490**	-
FLy Euro3	125	2007	2007	M57100	8412985001	**100010480**	-
FLy Euro3	125	2008	2011	M57200	8412985001	**100010480**	-
Hexagon Gtx	125	2000	2000	M2000000\M2000001	8412985001	**100010480**	-
Liberty	125	2001	2002	M2200	8412985001	**100010480**	-
Liberty 4T	125	2006	2007	M38100	8412985001	**100010480**	-
Liberty 4T 2V Euro3	125	2009	2012	M67100	8412985001	**100010480**	-
Liberty 4T 2V Ie Ptt - Ita	125	2012	2013	M38900	8412985001	**100010480**	-
Liberty 4T 3V Ie E3	125	2013	2014	M73400	8805270001	**100010490**	-
Liberty 4T Euro3	125	2006	2008	M38600	8412985001	**100010480**	-
Liberty 4T Euro3 Delivery - SinGLe	125	2007	2015	M38602	8412985001	**100010480**	-



Modello *Model*	**CC**	**Da** *From*	**A** *To*	**Telaio** *Frame*	**OEM**	**Codice RMS Standard** *RMS Standard Code*	**Codice RMS Racing** *RMS Racing Code*
Liberty 4T Euro3 Delivery - Tnt - Nexive	125	2008	2015	P38602	8412985001	**100010480**	-
Liberty 4T Sport Euro3	125	2006	2008	M38601	8412985001	**100010480**	-
Liberty Rst	125	2004	2005	M38100	8412985001	**100010480**	-
Liberty Rst Ptt	125	2005	2011	M38103	8412985001	**100010480**	-
Liberty Sport	125	2006	2006	M38104	8412985001	**100010480**	-
Mp3	125	2006	2008	M47300	8412985001	**100010480**	-
Skipper 4T	125	2000	2002	M2100	8412985001	**100010480**	-
Super Hexagon Gtx 12	125	2001	2002	M2000002\M2000003	8412985001	**100010480**	-
Typhoon 4T 2V Euro3	125	2010	2011	C5010	8412985001	**100010480**	-
Vespa 946 4T 3V Abs	125	2013	2015	M80100	8805270001	**100010490**	-
Vespa 946 4T 3V Abs Armani	125	2015	2015	M80101	8805270001	**100010490**	-
Vespa ET3 125	125	1976	1983	VMB1T	123296	**100010250**	**100030250**
Vespa ET4	125	1999	2002	M1900	8412985001	**100010480**	-
Vespa FL	125	1989	1990	VMX7T	2247885	-	**100030310**
Vespa Granturismo	125	2003	2005	M311\312	8412985001	**100010480**	-
Vespa Granturismo	125	2006	2007	M31101	8412985001	**100010480**	-
Vespa Granturismo Euro 3	125	2006	2007	M31300	8412985001	**100010480**	-
Vespa GTS Euro3	125	2007	2012	M31300	8412985001	**100010480**	-
Vespa GTV	125	2006	2008	M31301	8412985001	**100010480**	-
Vespa GTV 4T Navy Euro3	125	2008	2008	M31301	8412985001	**100010480**	-
Vespa LX	125	2005	2006	M44100	8412985001	**100010480**	-
Vespa LX 4T 3V Ie - Touring	125	2012	2013	-	8805270001	**100010490**	-
Vespa LX 4T Euro3 Touring	125	2010	2011	M68100	8412985001	**100010480**	-
Vespa LX 4T FL	125	2009	2009	M44100	8412985001	**100010480**	-
Vespa LX Euro 3	125	2006	2008	M44300	8412985001	**100010480**	-
Vespa LX Euro 3 Ie	125	2009	2011	M68100	8412985001	**100010480**	-
Vespa LX Primavera 4T 3V Ie	125	2013	2016	M81100	8805270001	**100010490**	-
Vespa LXV 4T Euro3	125	2006	2009	M44301	8412985001	**100010480**	-
Vespa LXV 4T Navy Euro3	125	2007	2008	M44301	8412985001	**100010480**	-
Vespa LXV Ie 4T	125	2010	2013	P68102	8412985001	**100010480**	-
Vespa Nuova 125	125	1965	1967	VMA1T	123296	**100010250**	**100030250**
Vespa P 125 E	125	1981	1981	VNX2T	133154	**100010270**	-
Vespa P 125 X	125	1977	1982	VNX1T	133154	**100010270**	-
Vespa PK 125	125	1982	1982	VMX1T	123296	**100010250**	**100030250**
Vespa PK 125 S	125	1982	1982	VMX5T	123296	**100010250**	**100030250**
Vespa PK XL	125	1986	1989	VMX6T	2247885	-	**100030310**
Vespa Primavera 125	125	1967	1983	VMA2T	123296	**100010250**	**100030250**
Vespa PX 125	125	2011	2016	M74100	133154	**100010270**	-
Vespa PX 125 30 Anni	125	2007	2008	M09302	133154	**100010270**	-
Vespa PX 125 E Arcobaleno	125	1983	1983	VNX2T	133154	**100010270**	-
Vespa PX 125 E Elestart	125	1984	1984	VNX2T	133154	**100010270**	-
Vespa PX 125 E Freno A Disco	125	1998	2001	VNX2T	133154	**100010270**	-
Vespa S 4T 3V Ie	125	2012	2012	MM68301	8805270001	**100010490**	-
Vespa S 4T Euro 3	125	2007	2008	M44302	8412985001	**100010480**	-
Vespa S 4T Ie & College	125	2009	2011	M68101	8412985001	**100010480**	-
Vespa Sprint 4T 3V Ie	125	2014	2015	M81300\01	8805270001	**100010490**	-
Vespa Sprint 4T 3V Ie	125	2015	2015	-	8805270001	**100010490**	-
X Evo	125	2007	2016	M36601	8412985001	**100010480**	-
X7 Euro 3	125	2008	2008	M62100	8412985001	**100010480**	-
X8	125	2004	2004	PM36200\PM36300	8412985001	**100010480**	-
X8	125	2005	2006	M36301	8412985001	**100010480**	-
X8 Premium Euro 2	125	2006	2006	M36301	8412985001	**100010480**	-
X8 Premium Euro 3	125	2006	2007	M36600	8412985001	**100010480**	-
X8 Street Euro 2	125	2006	2007	M49100	8412985001	**100010480**	-
X9	125	2001	2002	M2300001	8412985001	**100010480**	-
X9 Evolution	125	2003	2003	M2300035	8412985001	**100010480**	-
X9 Evolution	125	2005	2006	M23000	8412985001	**100010480**	-
X9 Evolution Euro3	125	2007	2007	M48100	8412985001	**100010480**	-



Modello *Model*	CC	Da *From*	A *To*	Telaio *Frame*	OEM	Codice RMS Standard *RMS Standard Code*	Codice RMS Racing *RMS Racing Code*
Zip	125	2000	2002	M2500	8412985001	**100010480**	-
FLy	150	2005	2007	M42200	8412985001	**100010480**	-
FLy Euro3	150	2008	2011	M57100	8412985001	**100010480**	-
Liberty 4T 3V Lem	150	2013	2014	M73500	8805270001	**100010490**	-
Liberty 4T Euro3	150	2008	2008	M38700	8412985001	**100010480**	-
Liberty 4T Sport Euro3	150	2008	2008	M38701	8412985001	**100010480**	-
Liberty Moc 4T Euro3	150	2009	2013	M67200	8412985001	**100010480**	-
Vespa 150	150	1961	1962	VBB1T	131321	**100010290**	-
Vespa 150	150	1963	1966	VBB2T	131321	**100010290**	-
Vespa GL 150	150	1963	1964	VLA1T	131321	**100010290**	-
Vespa LT 4T 3V Ie	150	2014	2014	RP8M66603	8805270001	**100010490**	-
Vespa LX	150	2005	2006	M44200	8412985001	**100010480**	-
Vespa LX 4T 3V Ie - Touring	150	2012	2013	M68400	8805270001	**100010490**	-
Vespa LX 4T FL	150	2009	2009	M44400	8412985001	**100010480**	-
Vespa LX Euro 3	150	2006	2008	M44400	8412985001	**100010480**	-
Vespa LX Euro 3 Ie	150	2009	2011	M68200	8412985001	**100010480**	-
Vespa LX Touring	150	2010	2012	M68200	8412985001	**100010480**	-
Vespa P 150 S	150	1978	1984	VBX1T	133154	**100010270**	-
Vespa P 150 X	150	1978	1981	VLX1T	133154	**100010270**	-
Vespa Primavera 4T-3V	150	2013	2016	M81200	8805270001	**100010490**	-
Vespa PX 150	150	2011	2016	M74200	133154	**100010270**	-
Vespa PX 150 E	150	1981	1981	VLX1T	133154	**100010270**	-
Vespa PX 150 E Arcobaleno	150	1983	1983	-	133154	**100010270**	-
Vespa PX 150 E Elestart	150	1984	1984	-	133154	**100010270**	-
Vespa PX 150 E Freno A Disco	150	1998	2001	VLX1T	133154	**100010270**	-
Vespa S 4T	150	2008	2009	M44402	8412985001	**100010480**	-
Vespa S 4T Ie & College	150	2009	2012	M68201	8412985001	**100010480**	-
Vespa Sprint 150	150	1965	1974	VLB1T	131321	**100010290**	-
Vespa Sprint Veloce 150	150	1969	1979	VLB1T	131321	**100010290**	-
Vespa Super 150	150	1965	1979	VBC1T	131321	**100010290**	-
X8 Street Euro 2	150	2006	2008	M49200	8412985001	**100010480**	-
Cosa 1 200	200	1988	1991	VSR1T	133153	**100010280**	-
Cosa 2 200	200	1991	1997	VSR1T	133153	**100010280**	-
Vespa P 200 X	200	1977	1977	VSX1T	133153	**100010280**	-
Vespa PX 200 E	200	1977	1982	VSX1T	133153	**100010280**	-
Vespa PX 200 E	200	1982	1982	VSX1T	133153	**100010280**	-
Vespa PX 200 E Freno A Disco	200	1998	2001	VSX1T	133153	**100010280**	-
Vespa PX 200 E Arcobaleno	200	1983	1984	VSX1T	133153	**100010280**	-
Vespa PX 200 E Elestart	200	1981	1990	VSX1T	133153	**100010280**	-
Vespa Rally 200	200	1972	1979	VSE1T	133153	**100010280**	-
SACHS							
Limbo 50 Lm	50	1997	1997	441	-	-	**100030130**
Limbo 50 M	50	1996	1997	441	-	-	**100030130**
Reggae 50	50	1996	1997	427	-	-	**100030130**
Reggae 50 Rs	50	1996	1997	427	-	-	**100030130**
Splinter 50	50	1996	1997	427	-	-	**100030130**
Squab 50	50	1997	1997	S1A03	-	-	**100030130**
SUZUKI							
An250 Burgman K3-K6	250	2003	2006	BV111\BV121\CJ43A	12200-14F00-000	**100010370**	-
An250 Burgman W-K2	250	1998	2002	AN111	12200-14F00-000	**100010370**	-
YAMAHA							
Bw'S Bump	50	1997	1998	4SB	3VLE14001000	**100010010** **100010011** **100010012**	**100030010** **100030011**
Bw'S Naked	50	2003	2003	SA064	3VLE14001000	**100010010** **100010011** **100010012**	**100030010** **100030011**
Bw'S Next Generation	50	1997	1998	4SB	3VLE14001000	**100010010** **100010011** **100010012**	**100030010** **100030011**



ALBERI MOTORE

CRANKSHAFTS

Modello *Model*	**CC**	**Da** *From*	**A** *To*	**Telaio** *Frame*	**OEM**	**Codice RMS Standard** *RMS Standard Code*	**Codice RMS Racing** *RMS Racing Code*
Bw'S Next Generation	50	1999	1999	SA051	3VLE14001000	**100010010 100010011 100010012**	**100030010 100030011**
Bw'S Next Generation	50	1999	2002	SA051	3VLE14001000	**100010010 100010011 100010012**	**100030010 100030011**
Bw'S Original	50	1997	1998	3WW\4VV	3VLE14001000	**100010010 100010011 100010012**	**100030010 100030011**
Bw'S Original	50	1999	1999	SA061	3VLE14001000	**100010010 100010011 100010012**	**100030010 100030011**
Bw'S Original	50	1999	2002	SA061	3VLE14001000	**100010010 100010011 100010012**	**100030010 100030011**
Bw'S Original Euro2	50	2003	2003	SA064	3VLE14001000	**100010010 100010011 100010012**	**100030010 100030011**
Bw'S R	50	2001	2001	SA061	3VLE14001000	**100010010 100010011 100010012**	**100030010 100030011**
Cs Jog R	50	2002	2002	SA221	4CUE14003000	**100010030 100010031 100010032**	**100030030 100030031**
Cs Jog R	50	2006	2012	SA22V	5RNE14001100	**100010030 100010031 100010032**	**100030030 100030031**
Cs Jog R	50	2013	2015	SA486	5RNE14001100	**100010030 100010031 100010032**	**100030030 100030031**
Cs Jog R Euro2	50	2002	2005	SA224	5RNE14000000	**100010030 100010031 100010032**	**100030030 100030031**
Cw Bw'S Original Euro2	50	2002	2002	SA064	3VLE14001000	**100010010 100010011 100010012**	**100030010 100030011**
Cw L Bw'S	50	2003	2003	SA064	3VLE14001000	**100010010 100010011 100010012**	**100030010 100030011**
Cw Rs Spy	50	1995	1998	4UP1\4UP2\4UP4	3VLE14001000	**100010010 100010011 100010012**	**100030010 100030011**
Cw Sp Bw'S Original Euro2	50	2002	2002	SA064	3VLE14001100	**100010010 100010011 100010012**	**100030010 100030011**
Dt R - Dt Rsm	50	2003	2005	70K10\70K1A	13CE14000000	**100010050**	-
Dt R - Dt X	50	2006	2006	70K10\70K1A	5WXE14001000	**100010050**	-
Dt R - Dt X	50	2007	2011	70K10\70K1A	13CE14000000	**100010050**	-
Ew Slider	50	2000	2002	SA091	3VLE14001000	**100010010 100010011 100010012**	**100030010 100030011**
Ns50 Aerox	50	2013	2016	SA421	5RNE14001100	**100010030 100010031 100010032**	**100030030 100030031**
Ns50F Aerox F	50	2014	2016	SA426	5STE14001200	**100010060**	-
Ns50N Aerox Naked	50	2013	2016	SA424	5RNE14001100	**100010030 100010031 100010032**	**100030030 100030031**
Tzr	50	2003	2006	RA031	5WXE14001000	**100010050**	-
Tzr	50	2007	2007	RA033	5WXE14001000	**100010050**	-
Tzr	50	2008	2008	RA033	13CE14000000	**100010050**	-
Tzr	50	2010	2011	RA033	13CE14000000	**100010050**	-
Tzr	50	2012	2012	RA041	13CE14000000	**100010050**	-
Tzr Rr	50	2005	2005	RA031	5WXE14001000	**100010050**	-
Xf Giggle	50	2008	2008	SA351	5STE14001000	**100010060**	-
Ya R Axis	50	1995	1996	4PC3\4PC6	5WJE14000000	**100010030 100010031 100010032**	**100030030 100030031**



Modello *Model*	**CC**	**Da** *From*	**A** *To*	**Telaio** *Frame*	**OEM**	**Codice RMS Standard** *RMS Standard Code*	**Codice RMS Racing** *RMS Racing Code*
Yh Why	50	1998	1998	SA031	4CUE14002000	**100010030 100010031 100010032**	**100030030 100030031**
Yh Why	50	2001	2002	SA03B	5WJE14000000	**100010030 100010031 100010032**	**100030030 100030031**
Yh Why	50	2006	2006	SA03E	5WJE14000000	**100010030 100010031 100010032**	**100030030 100030031**
Yh Why Euro1	50	1999	2000	SA031	5WJE14000000	**100010030 100010031 100010032**	**100030030 100030031**
Yh Why Euro2	50	2003	2005	SA03E	5RNE14000000	**100010030 100010031 100010032**	**100030030 100030031**
Ym Breeze	50	1994	1995	4KH1\4KH3	5WJE14000000	**100010030 100010031 100010032**	**100030030 100030031**
Yn F Neo'S 4	50	2009	2010	SA401	5STE14001100	**100010060**	-
Yn F Neo'S 4	50	2011	2012	SA404	5STE14001100	**100010060**	-
Yn F Neo'S 4	50	2012	2015	SA461	5STE14001200	**100010060**	-
Yn Neo'S	50	2004	2006	SA211	5RNE14000000	**100010030 100010031 100010032**	**100030030 100030031**
Yn Neo'S	50	2007	2012	SA341	5RNE14001100	**100010030 100010031 100010032**	**100030030 100030031**
Yn Neo'S	50	2012	2016	SA451	5RNE14001100	**100010030 100010031 100010032**	**100030030 100030031**
Yn Neo'S Easy	50	2013	2013	SA457	5RNE14001100	**100010030 100010031 100010032**	**100030030 100030031**
Yn Neo'S Euro2	50	2002	2003	SA211	5RNE14000000	**100010030 100010031 100010032**	**100030030 100030031**
Yn Neo'S Euro2	50	2002	2003	SA211	5WJE14000000	**100010030 100010031 100010032**	**100030030 100030031**
Yn R Neo'S	50	1997	2001	5AD\SA151	5RNE14001100	**100010030 100010031 100010032**	**100030030 100030031**
Yn R Neo'S	50	2002	2002	SA151	4CUE14003000	**100010030 100010031 100010032**	**100030030 100030031**
Yq Aerox	50	1997	1998	5BR\5BR00	4CUE14002000	**100010030 100010031 100010032**	**100030030 100030031**
Yq Aerox	50	2001	2002	SA141	5RNE14000000	**100010030 100010031 100010032**	**100030030 100030031**
Yq Aerox	50	2004	2004	SA144	5RNE14000000	**100010030 100010031 100010032**	**100030030 100030031**
Yq Aerox	50	2004	2005	SA144	5WJE14000000	**100010030 100010031 100010032**	**100030030 100030031**
Yq Aerox	50	2006	2006	SA144	5RNE14001100	**100010030 100010031 100010032**	**100030030 100030031**
Yq Aerox	50	2007	2007	SA144	5RNE14000000	**100010030 100010031 100010032**	**100030030 100030031**
Yq Aerox	50	2008	2008	SA144	5RNE14001000	**100010030 100010031 100010032**	**100030030 100030031**
Yq Aerox	50	2009	2012	SA144	5RNE14001100	**100010030 100010031 100010032**	**100030030 100030031**
Yq Aerox R	50	1999	1999	5BR00	4CUE14002000	**100010030 100010031 100010032**	**100030030 100030031**



Modello *Model*	**CC**	**Da** *From*	**A** *To*	**Telaio** *Frame*	**OEM**	**Codice RMS Standard** *RMS Standard Code*	**Codice RMS Racing** *RMS Racing Code*
Yq Aerox R	50	1999	2000	5BR00	5WJE14000000	**100010030** **100010031** **100010032**	**100030030** **100030031**
Yq L Aerox Euro2	50	2003	2003	SA144	5RNE14000000	**100010030** **100010031** **100010032**	**100030030** **100030031**
Vp X-City	125	2008	2011	SE431	1B9E14000000	**100010510**	-
Yp125R X-Max	125	2006	2009	SE321	1B9E14000000	**100010510**	-
Yp125R X-Max	125	2010	2012	SE541	1B9E14000000	**100010510**	-
Yp125R X-Max	125	2012	2013	SG252	39DE14003000	**100010510**	-
Yp125R X-Max	125	2014	2014	SE681	39DE14003000	**100010510**	-
Yp125R X-Max	125	2015	2016	SE681\SE686	39DE14003000	**100010510**	-
Yp125R X-Max Abs	125	2011	2011	SE544	1B9E14000000	**100010510**	-
Yp125Ra X-Max Abs	125	2013	2013	SE644	39DE14003000	**100010510**	-
Yp125Ra X-Max Abs	125	2014	2016	SE684	39DE14003000	**100010510**	-
Yp125Ra X-Max Abs	125	2017	2017	SEC31	39DE14004000	**100010510**	-
Yp125Ra X-Max Abs	125	2018	2019	SEE61	39DE14004000	**100010510**	-
Yp125Ra X-Max Abs Iron Max	125	2019	2019	SEE64	39DE14004000	**100010510**	-

MOTORE MINARELLI VERTICALE |
MINARELLI VERTICAL ENGINE

100010010
100010011
100010012



TIPO STANDARD | *STANDARD TYPE*
Spinotto Ø 10mm | *Ø 10mm pin*
Gabbia a rulli inclusa | *Roller cage included*

APRILIA: R.O. AP8206221
MBK: R.O. 3VLE14001000
YAMAHA: R.O. 3VLE14001000

PRODOTTI CORRELATI | ***RELATED PRODUCTS***



100200492 NTN
100200320 SKF
100200340 KOYO



100150010

MOTORE MINARELLI VERTICALE |
MINARELLI VERTICAL ENGINE

100030010 *



BILANCIATO CON BIELLA LUCIDATA |
BALANCED WITH POLISHED CONROD
Spinotto Ø 10mm | *Ø 10mm pin*
Gabbia a rulli inclusa | *Roller cage included*

APRILIA: R.O. AP8206221
MBK: R.O. 3VLE14001000
YAMAHA: R.O. 3VLE14001000

PRODOTTI CORRELATI | ***RELATED PRODUCTS***



100200492 NTN
100200320 SKF
100200340 KOYO



100150010

MOTORE MINARELLI VERTICALE |
MINARELLI VERTICAL ENGINE

100030011 *



CON INSERTO IN NYLON | *WITH LINER*
Spinotto Ø 10mm | *Ø 10mm pin*
Gabbia a rulli inclusa | *Roller cage included*

APRILIA: R.O. AP8206221
MBK: R.O. 3VLE14001000
YAMAHA: R.O. 3VLE14001000

PRODOTTI CORRELATI | ***RELATED PRODUCTS***



100200492 NTN
100200320 SKF
100200340 KOYO



100150010

MOTORE MINARELLI ORIZZONTALE |
MINARELLI HORIZONTAL ENGINE

100010030
100010031
100010032



TIPO STANDARD | *STANDARD TYPE*
Spinotto Ø 10mm | *Ø 10mm pin*
Gabbia a rulli inclusa | *Roller cage included*

APRILIA: R.O. AP8206501
BENELLI: R.O. R12040021A0
MALAGUTI: R.O. 77116000
MBK: R.O. 5RNE14001100
YAMAHA: R.O. 5RNE14001100

PRODOTTI CORRELATI | ***RELATED PRODUCTS***



100200492 NTN
100200320 SKF
100200340 KOYO



100150010

* Utilizzo esclusivo per uso agonistico, vietato l'uso su strade pubbliche | *Only for racing use, the use on public road is forbidden*



MOTORE MINARELLI ORIZZONTALE |
MINARELLI HORIZONTAL ENGINE

100030030 *



BILANCIATO CON BIELLA LUCIDATA |
BALANCED WITH POLISHED CONROD
Spinotto Ø 10mm | *Ø 10mm pin*
Gabbia a rulli inclusa | *Roller cage included*

APRILIA: R.O. AP8206501
BENELLI: R.O. R12040021A0
MALAGUTI: R.O. 77116000
MBK: R.O. 5RNE14001100
YAMAHA: R.O. 5RNE14001100

PRODOTTI CORRELATI | *RELATED PRODUCTS*



100200492 NTN
100200320 SKF
100200340 KOYO



100150010

MOTORE MINARELLI ORIZZONTALE |
MINARELLI HORIZONTAL ENGINE

100030031 *



CON INSERTO IN NYLON | *WITH LINER*
Spinotto Ø 10mm | *Ø 10mm pin*
Gabbia a rulli inclusa | *Roller cage included*

APRILIA: R.O. AP8206501
BENELLI: R.O. R12040021A0
MALAGUTI: R.O. 77116000
MBK: R.O. 5RNE14001100
YAMAHA: R.O. 5RNE14001100

PRODOTTI CORRELATI | *RELATED PRODUCTS*



100200492 NTN
100200320 SKF
100200340 KOYO



100150010

MINARELLI AM3-4-5-6 |
MINARELLI ENGINE AM3-4-5-6

100010050



TIPO STANDARD | *STANDARD TYPE*
Spinotto Ø 12mm | *Ø 12mm pin*
Gabbia a rulli inclusa | *Roller cage included*

APRILIA: R.O. AP8206311
YAMAHA: R.O. 13CE14000000

PRODOTTI CORRELATI | *RELATED PRODUCTS*



100200560



100150010

PIAGGIO 50CC 2T |
PIAGGIO 50CC 2 STROKES

100010310



TIPO STANDARD | *STANDARD TYPE*
Gabbia a rulli inclusa | *Roller cage included*

APRILIA: R.O. 8269405
GILERA: R.O. 8269405
PIAGGIO: R.O. 8269405

PRODOTTI CORRELATI | *RELATED PRODUCTS*



-



-

* Utilizzo esclusivo per uso agonistico, vietato l'uso su strade pubbliche | *Only for racing use, the use on public road is forbidden*

PIAGGIO 50CC 4T |
PIAGGIO 50CC 4 STROKES

100010320



TIPO STANDARD | *STANDARD TYPE*
Sede cuscinetto lato frizione Ø 25mm |
Bearing clutch side Ø 25mm

APRILIA: R.O. AP8570104
GILERA: R.O. 969203
PIAGGIO: R.O. 969203

PRODOTTI CORRELATI | ***RELATED PRODUCTS***

 -

 -

PIAGGIO 50CC 2T |
PIAGGIO 50CC 2 STROKES

100010200
100010202



TIPO STANDARD | *STANDARD TYPE*
Spinotto Ø 12mm | *Ø 12mm pin*
Gabbia a rulli inclusa | *Roller cage included*

APRILIA: R.O. 4316255
DERBI: R.O. 4316255
GILERA: R.O. 4316255
PIAGGIO: R.O. 4316255

PRODOTTI CORRELATI | ***RELATED PRODUCTS***


100200300 SKF (Nylon)
100200310 SKF (Acciaio | *Steel*)
100200312 NTN


100150300

PIAGGIO 50CC 2T |
PIAGGIO 50CC 2 STROKES

100030200 *



BILANCIATO CON BIELLA LUCIDATA |
BALANCED WITH POLISHED CONROD
Spinotto Ø 12mm | *Ø 12mm pin*
Gabbia a rulli inclusa | *Roller cage included*

APRILIA: R.O. 4316255
DERBI: R.O. 4316255
GILERA: R.O. 4316255
PIAGGIO: R.O. 4316255

PRODOTTI CORRELATI | ***RELATED PRODUCTS***


100200300 SKF (Nylon)
100200310 SKF (Acciaio | *Steel*)
100200312 NTN


100150300

PIAGGIO 50CC 2T |
PIAGGIO 50CC 2 STROKES

100030201 *



CON INSERTO IN NYLON | *WITH LINER*
Spinotto Ø 12mm | *Ø 12mm pin*
Gabbia a rulli inclusa | *Roller cage included*

APRILIA: R.O. 4316255
DERBI: R.O. 4316255
GILERA: R.O. 4316255
PIAGGIO: R.O. 4316255

PRODOTTI CORRELATI | ***RELATED PRODUCTS***


100200300 SKF (Nylon)
100200310 SKF (Acciaio | *Steel*)
100200312 NTN


100150300

* Utilizzo esclusivo per uso agonistico, vietato l'uso su strade pubbliche | *Only for racing use, the use on public road is forbidden*

PIAGGIO 50CC 4T | *PIAGGIO 50CC 4 STROKES*

100010350



TIPO STANDARD | *STANDARD TYPE*
Sede cuscinetto lato frizione Ø 20mm | *Bearing clutch side Ø 20mm*

APRILIA: R.O. 969428
DERBI: R.O. 969428
PIAGGIO: R.O. 969428

PRODOTTI CORRELATI | *RELATED PRODUCTS*

 -

 -

PIAGGIO 100CC 4T | *PIAGGIO 100CC 4 STROKES*

100010420



TIPO STANDARD | *STANDARD TYPE*

APRILIA: R.O. 9699585
DERBI: R.O. 9699585
PIAGGIO: R.O. 9699585

PRODOTTI CORRELATI | *RELATED PRODUCTS*

 -

 -

HONDA 50CC 2T | *HONDA 50CC 2 STROKES*

100010110



TIPO STANDARD | *STANDARD TYPE*
Sede cuscinetto lato frizione e volano Ø 25mm | *Bearing clutch and flywheel side Ø 25mm*
Gabbia a rulli inclusa | *Roller cage included*

HONDA: R.O. 13000GBY900

PRODOTTI CORRELATI | *RELATED PRODUCTS*

 -

 -

HONDA 50CC 2T | *HONDA 50CC 2 STROKES*

100010120



TIPO STANDARD | *STANDARD TYPE*
Sede cuscinetto lato frizione e volano Ø 20mm | *Bearing clutch and flywheel side Ø 20mm*
Gabbia a rulli inclusa | *Roller cage included*

HONDA: R.O. 13000GAV700

PRODOTTI CORRELATI | *RELATED PRODUCTS*

 -

 -

HONDA 150CC 4T | *HONDA 150CC 4 STROKES*

100010520



TIPO STANDARD | *STANDARD TYPE*
Spinotto Ø 14mm | *Ø 14mm pin*

HONDA: R.O. 13000KGG910

PRODOTTI CORRELATI | *RELATED PRODUCTS*

 **100200692 NTN**

 -

HONDA 125CC 4T | *HONDA 125CC 4 STROKES*

100010500



TIPO STANDARD | *STANDARD TYPE*
Spinotto Ø 14mm | *Ø 14mm pin*
Include cuscinetti NTN | *NTN bearings included*

HONDA: R.O. 13000KGF910

PRODOTTI CORRELATI | *RELATED PRODUCTS*

 -

 -

KYMCO 50CC 2T | *KYMCO 50 CC 2 STROKES*

100010340



TIPO STANDARD | *STANDARD TYPE*
Spinotto Ø 12mm | *Ø 12mm pin*
Gabbia a rulli inclusa | *Roller cage included*

KYMCO: R.O. 00110201

PRODOTTI CORRELATI | *RELATED PRODUCTS*

 -

 -

KYMCO 50CC 4T | *KYMCO 50 CC 4 STROKES*

100010470



TIPO STANDARD | *STANDARD TYPE*
Spinotto Ø 13mm | *Ø 13mm pin*
Include cuscinetti | *Bearings included*

KYMCO: R.O. 00103629

PRODOTTI CORRELATI | *RELATED PRODUCTS*

 -

 -

MALAGUTI 50CC 2T |
MALAGUTI 50CC 2 STROKES

100010330



TIPO STANDARD | *STANDARD TYPE*
Gabbia a rulli inclusa | *Roller cage included*
Lunghezza perno lato frizione 110mm |
Clutch side lenght 110mm

MALAGUTI: R.O. 77116200

PRODOTTI CORRELATI | ***RELATED PRODUCTS***



100200692 NTN



-

MALAGUTI 50CC 2T |
MALAGUTI 50CC 2 STROKES

100010040



TIPO STANDARD | *STANDARD TYPE*
Gabbia a rulli inclusa | *Roller cage included*

MALAGUTI: R.O. 59012200

PRODOTTI CORRELATI | ***RELATED PRODUCTS***



-



-

PEUGEOT 50CC 2T |
PEUGEOT 50CC 2 STROKES

100030130 *



BILANCIATO CON BIELLA LUCIDATA |
BALANCED WITH POLISHED CONROD
Spinotto Ø 12mm | *Ø 12mm pin*
Gabbia a rulli inclusa | *Roller cage included*

PEUGEOT: -

PRODOTTI CORRELATI | ***RELATED PRODUCTS***



-



-

PEUGEOT 50CC 2T |
PEUGEOT 50CC 2 STROKES

100010400



TIPO STANDARD | *STANDARD TYPE*
Gabbia a rulli inclusa | *Roller cage included*

PEUGEOT: -

PRODOTTI CORRELATI | ***RELATED PRODUCTS***



-



-

* Utilizzo esclusivo per uso agonistico, vietato l'uso su strade pubbliche | *Only for racing use, the use on public road is forbidden*

PIAGGIO VESPA 125CC 2T |
PIAGGIO VESPA 125CC 2 STROKES

100010250



TIPO STANDARD | *STANDARD TYPE*
Spinotto Ø 15mm | *Ø 15mm pin*
Gabbia a rulli inclusa | *Roller cage included*

PIAGGIO: R.O. 123296

PRODOTTI CORRELATI | *RELATED PRODUCTS*



100200830



100150400

PIAGGIO VESPA ET3 125CC 2T |
PIAGGIO VESPA ET3 125CC 2 STROKES

100030250 *



BILANCIATO CON BIELLA LUCIDATA |
BALANCED WITH POLISHED CONROD
Spinotto Ø 15mm | *Ø 15mm pin*
Gabbia a rulli inclusa | *Roller cage included*

PIAGGIO: R.O. 123296

PRODOTTI CORRELATI | *RELATED PRODUCTS*



100200830



100150400

PIAGGIO VESPA PK 50CC 2T |
PIAGGIO VESPA PK 50CC 2 STROKES

100010230



TIPO STANDARD | *STANDARD TYPE*
Spinotto Ø 12mm | *Ø 12mm pin*
Cono piccolo | *Small cone flywheel side*
Gabbia a rulli inclusa | *Roller cage included*

PIAGGIO: R.O. 123292

PRODOTTI CORRELATI | *RELATED PRODUCTS*



100200810 SKF



100150250

PIAGGIO VESPA PK 50CC 2T |
PIAGGIO VESPA PK 50CC 2 STROKES

100010240



TIPO STANDARD | *STANDARD TYPE*
Spinotto Ø 12mm | *Ø 12mm pin*
Cono grosso | *Big cone flywheel side*
Gabbia a rulli inclusa | *Roller cage included*

PIAGGIO: R.O. 224587

PRODOTTI CORRELATI | *RELATED PRODUCTS*



100200810 SKF



100150300

* Utilizzo esclusivo per uso agonistico, vietato l'uso su strade pubbliche | *Only for racing use, the use on public road is forbidden*

PIAGGIO VESPA PX 125-150CC 2T |
PIAGGIO VESPA PX 125-150CC 2 STROKES

100010270



TIPO STANDARD | *STANDARD TYPE*
Spinotto Ø 15mm | *Ø 15mm pin*
Gabbia a rulli inclusa | *Roller cage included*

PIAGGIO: R.O. 133154

PRODOTTI CORRELATI | *RELATED PRODUCTS*

 **100200840**

 **100150400**

PIAGGIO VESPA PE 200CC 2T |
PIAGGIO VESPA PE 200CC 2 STROKES

100010280



TIPO STANDARD | *STANDARD TYPE*
Spinotto Ø 16mm | *Ø 16mm pin*
Gabbia a rulli inclusa | *Roller cage included*

PIAGGIO: R.O. 1331535

PRODOTTI CORRELATI | *RELATED PRODUCTS*

 **100200860**

 **100150450**

PIAGGIO VESPA GL SPRINT 150CC 2T |
PIAGGIO VESPA GL SPRINT 150CC 2 STROKES

100010290



TIPO STANDARD | *STANDARD TYPE*
Spinotto Ø 15mm | *Ø 15mm pin*
Gabbia a rulli inclusa | *Roller cage included*

PIAGGIO: R.O. 131321

PRODOTTI CORRELATI | *RELATED PRODUCTS*

 **100200850**

 **100150400**

PIAGGIO VESPA PK 50-125CC |
PIAGGIO VESPA PK 50-125CC

100030310 *



Per trasformazione da 50 a 125cc | *For racing cylinder from 50 to 125cc*
BILANCIATO CON BIELLA LUCIDATA | *BALANCED WITH POLISHED CONROD*
Cono grosso | *Big cone*
Spinotto Ø 15mm | *Ø 15mm pin*
Gabbia a rulli inclusa | *Roller cage included*

PIAGGIO: -

PRODOTTI CORRELATI | *RELATED PRODUCTS*

 **100200820 SKF**

 **100150400**

* Utilizzo esclusivo per uso agonistico, vietato l'uso su strade pubbliche | *Only for racing use, the use on public road is forbidden*

PIAGGIO APE 50CC 2T |
PIAGGIO APE 50CC 2 STROKES

100010410



TIPO STANDARD | *STANDARD TYPE*
Spinotto Ø 12mm | *Ø 12mm pin*
Gabbia a rulli inclusa | *Roller cage included*

PIAGGIO: R.O. 8462675

PRODOTTI CORRELATI | ***RELATED PRODUCTS***



100200770 SKF



100150300

PIAGGIO SI-BRAVO 50CC 2T |
PIAGGIO SI-BRAVO 50CC 2 STROKES

100010211



TIPO STANDARD | *STANDARD TYPE*
Spinotto Ø 10mm | *Ø 10mm pin*
Gabbia a rulli inclusa | *Roller cage included*

PIAGGIO: R.O. 184154

PRODOTTI CORRELATI | ***RELATED PRODUCTS***



100200780 SKF



100150050

PIAGGIO SI-BRAVO 50CC 2T |
PIAGGIO SI-BRAVO 50CC 2 STROKES

100010221



TIPO STANDARD | *STANDARD TYPE*
Spinotto Ø 12mm | *Ø 12mm pin*
Gabbia a rulli inclusa | *Roller cage included*

PIAGGIO: R.O. 113708

PRODOTTI CORRELATI | ***RELATED PRODUCTS***



100200780 SKF



100150150

PIAGGIO 125-150CC 4T |
PIAGGIO 125-150CC 4 STROKES

100010480



TIPO STANDARD | *STANDARD TYPE*

APRILIA: R.O. 8412985001
DERBI: R.O. 8412985001
GILERA: R.O. 8412985001
PIAGGIO: R.O. 8412985001

PRODOTTI CORRELATI | ***RELATED PRODUCTS***



-



-

PIAGGIO 125-150CC 4T |
PIAGGIO 125-150CC 4 STROKES

100010490



TIPO STANDARD | *STANDARD TYPE*

PIAGGIO: R.O. 8805270001

PRODOTTI CORRELATI | *RELATED PRODUCTS*

 -

 -

SUZUKI BURGMAN 250CC 4T |
SUZUKI BURGMAN 250CC 4 STROKES

100010370



TIPO STANDARD | *STANDARD TYPE*

SUZUKI: R.O. 12200-14F10-000

PRODOTTI CORRELATI | *RELATED PRODUCTS*

 **100200702 NTN**

 -

YAMAHA 50CC 4T |
YAMAHA 50CC 4 STROKES

100010060



TIPO STANDARD | *STANDARD TYPE*
Cuscinetti inclusi | *Bearings included*

YAMAHA: R.O. 5STE14001100

PRODOTTI CORRELATI | *RELATED PRODUCTS*

 -

 -

YAMAHA X-MAX 125CC |
YAMAHA X-MAX 125CC

100010510



TIPO STANDARD | *STANDARD TYPE*
Incluso cuscinetto lato trasmissione |
Included bearing on clutch side

YAMAHA: R.O. 1B9E1400000

PRODOTTI CORRELATI | *RELATED PRODUCTS*

 -

 -

100200300

GILERA PIAGGIO SCOOTER 50



2	Cuscinetti | *Bearings* SKF Gabbia in Nylon | *Polyamid cage*	20-52-12
1	Paraolio | *Oil seal*	18-28-7
1	Paraolio | *Oil seal*	19-30-7

100200310

GILERA PIAGGIO SCOOTER 50



2	Cuscinetti | *Bearings* SKF Gabbia in Acciaio | *Steel cage*	20-52-12
1	Paraolio | *Oil seal*	18-28-7
1	Paraolio | *Oil seal*	19-30-7

100200312

GILERA PIAGGIO SCOOTER 50



2	Cuscinetti | *Bearings* NTN Gabbia in Acciaio | *Steel cage*	20-52-12
1	Paraolio | *Oil seal*	18-28-7
1	Paraolio | *Oil seal*	19-30-7

100200320

MINARELLI - YAMAHA 50



2	Cuscinetti | *Bearings* SKF Gabbia in Nylon | *Polyamid cage*	20-47-14
1	Paraolio | *Oil seal*	20-30/33,5-5,3-6
1	Paraolio | *Oil seal*	20-42/43-8-9

100200340

MINARELLI - MBK - YAMAHA 50



2	Cuscinetti | *Bearings* KOYO Gabbia in Acciaio | *Steel cage*	20-47-14
1	Paraolio | *Oil seal*	20-30/33,5-5,3/6
1	Paraolio | *Oil seal*	20-42/43-8/9

100200400

MOTORI - F. MORINI - APRILIA - ITALJET - MALAGUTI - SUZUKI



1	Cuscinetto | *Bearing* SKF 6204TN9 | C4HLHT23 Gabbia in Nylon | *Polyamid cage*	20-47-14
1	Cuscinetto | *Bearing* SKF BB1-3056C Gabbia in Acciaio | *Steel cage*	25-52-13
1	Paraolio | *Oil seal*	17-27-6
1	Paraolio | *Oil seal*	25-37-6
1	Paraolio | *Oil seal*	24-43-6

100200492

MINARELLI-MBK-YAMAHA 50



2	Cuscinetti | *Bearings* NTN Gabbia in Acciaio | *Steel cage*	20-47-14
1	Paraolio | *Oil seal*	20-30/33,5-5,3-6
1	Paraolio | *Oil seal*	20-42/43-8/9

100200560

MOTORI MINARELLI 50: Am 3/4/5-Am6



2	Cuscinetti | *Bearings* SFK 6303 TN9C3	17-47-14
1	Paraolio | *Oil seal*	17-35-8
1	Paraolio | *Oil seal*	24-35-7

100200610

PEUGEOT 50: Buxy 94-97 • Elyseo 99 • Looxor 01-03 • Metal X 02 • Speedake 95-97 • Speedfight acqua/aria 97-98 •Speedfight aria Kat 99 • Squab 95-97 • Sv Geo 91-95 • Trekker 98-00 • Vivacity 99 • Vivacity Kat 99-02 • Vsx-Xr02-04 • X Fight 00 • X Race 03 • Zenith L 94-96 • Ln-Ls-N 97-98



2	Cuscinetti | *Bearings* SFK	20-52-12
1	Paraolio | *Oil seal*	15,6-25,6-7
1	Paraolio | *Oil seal*	20-30-7

100200620

PEUGEOT 50: Speed Fight 2 aria 04-06



1	Cuscinetto | *Bearing* SFK 6204 C4 MT Gabbia in Acciaio | *Steel cage*	20-47-14
1	Cuscinetto | *Bearing* SFK BB1 3055B Gabbia in Acciaio | *Steel cage*	20-52-12
1	Paraolio | *Oil seal*	15,6-25,6-7
1	Paraolio | *Oil seal*	20-30-7

100200682

PIAGGIO 125: Vespa ET4 96-98



2	Cuscinetti | *Bearings* NTN Gabbia in Acciaio | *Steel cage*	25-68-12
1	Paraolio | *Oil seal*	18-28-7
1	Paraolio | *Oil seal*	22-32-7

100200692

HONDA 125: Sh 01-12 • Pantheon Fes 03-05 • S Wing Fes Abs 07-09 • @ 01-05 • Pes 06-10 • Dylan 02-04
HONDA 150: Sh 01-12 • Pantheon Fes 03-05 • S Wing Fes Abs 07-09 • @ 01-05 • Pes 06-10 • Dylan 02-04



1	Cuscinetto | *Bearing* NTN Gabbia in Acciaio | *Steel cage*	35-72-17
1	Cuscinetto | *Bearing* NTN Gabbia in Acciaio | *Steel cage*	35-72-15
1	Paraolio | *Oil seal*	20.8-53-6.9

100200702

SUZUKI 125-150: Epicuro 99-01 • Burgman 02-08 • Sixteen 08
SUZUKI 200: Burgman 07-08
SUZUKI 250: Burgman 98-06
SUZUKI 400: Burgman 99-08



2	Cuscinetti | *Bearings* NTN Gabbia in Acciaio | *Steel cage*	35-72-17
1	Paraolio | *Oil seal*	34-52-5.8

100200712

GILERA 125: Runner 2T 97-02 • Typhoon X • Typhoon XR 95-00
GILERA 180: Runner 2T 97-02
PIAGGIO 125: Hexagon 94-97 • Hexagon LX • LXT 98-99 • Skipper 94-97 • LX 98-99
PIAGGIO 150: Hexagon 94-97 • Skipper 94-97 • Lx 98-99
PIAGGIO 180: Hexagon Lx • Lxt 98-99



2	Cuscinetti | *Bearings* NTN Gabbia in Acciaio | *Steel cage*	25-68-12
2	Paraolio | *Oil seal*	24-35-7

100200730

PIAGGIO 125-150-200: Vespa PX • Vespa PE VNX-VLX-VSX2-VNX2



1	Cuscinetto | *Bearing* SKF Gabbia in Acciaio | *Steel cage*	25-62-12
1	Cuscinetto | *Bearing*	25-38-15
1	Paraolio | *Oil seal*	24-35-6
1	Paraolio | *Oil seal*	31-62-4.3/5.8

100200740

PIAGGIO 125-150-200: Vespa PX • Vespa PE VNX-VLX-VSX2-VNX2



1	Cuscinetto | *Bearing* Gabbia in Acciaio | *Steel cage*	25-62-12
1	Cuscinetto | *Bearing*	25-38-15
1	Paraolio | *Oil seal*	24-35-6
1	Paraolio | *Oil seal*	31-62-4.3/5.8

100200743

PIAGGIO 150: Vespa Sprint • Vespa GL • Vespa Super • Vespa GTR VLA-VLB-VLN-VBC



2	Cuscinetti | *Bearings*	25-62-12
1	Paraolio | *Oil seal*	20-40/60-6
1	Paraolio | *Oil seal*	20-62-6,5

100200750

PIAGGIO 50-90: Vespa V5AI-V5A2T-V5BIT-V5B3T-V9AI



1	Cuscinetto | *Bearing* SKF	17-47-14
1	Cuscinetto | *Bearing* SKF	20-47-14
1	Paraolio | *Oil seal*	22,7-47-7/7.5
1	Paraolio | *Oil seal*	19-32-7

100200760

PIAGGIO 125: Vespa ET3 • Vespa Primavera



1	Cuscinetto | *Bearing* SKF	17-47-14
1	Cuscinetto | *Bearing* SKF	20-47-14
1	Paraolio | *Oil seal*	22,7-47-7/7,5
1	Paraolio | *Oil seal*	19-32-7

100200770

PIAGGIO: Ape 50



1	Cuscinetto | *Bearing* SKF	17-47-14
1	Cuscinetto | *Bearing* SKF	20-47-14
1	Paraolio | *Oil seal*	22,7-47-7/7,5
1	Paraolio | *Oil seal*	20-32-7

100200780

PIAGGIO 50: Bravo Erre2 75-81 • Ciao 80-88 • Ciao Eu1 99-01 • Ciao Eu2 02-04 • Ciao Tre 71-99 • Grillo 89-93-Si 79-88 • Si FL2 91-97



2	Cuscinetti | *Bearings* SKF	15-35-11
1	Paraolio | *Oil seal*	15-24-5

100200790

PIAGGIO 50: Vespa PK XL V5X3



1	Cuscinetto | *Bearing* SKF	17-47-14
1	Cuscinetto | *Bearing* SKF	20-47-14
1	Paraolio | *Oil seal*	22,7-47-7/7.5
1	Paraolio | *Oil seal*	20-47-14

100200810

PIAGGIO 50: Vespa



1	Cuscinetto | *Bearing*	20-47-14
1	Cuscinetto | *Bearing*	17-47-14
1	Paraolio Blu | *Blue Oil seal*	22,7-47-7/7,5
1	Paraolio Blu | *Blue Oil seal*	19-32-7
1	Paraolio Blu | *Blue Oil seal*	27-37-7
1	Anello | *O Ring*	15,88-2,62
1	Anello | *O Ring*	6,75-2
2	Anello | *O Ring*	-
1	Anello | *O Ring*	8,73-1,78

100200820

PIAGGIO 50-125: Vespa PK • Vespa PK XL V5X3-VMX6T



1	Cuscinetto | *Bearing*	20-47-14
1	Cuscinetto | *Bearing*	17-47-14
1	Paraolio Blu | *Blue Oil seal*	22,7-47-7/7,5
1	Paraolio Blu | *Blue Oil seal*	20-32-7
1	Paraolio Blu | *Blue Oil seal*	27-37-7
1	Anello | *O Ring*	15,88-2,62
1	Anello | *O Ring*	6,75-2
2	Anello | *O Ring*	-
1	Anello | *O Ring*	8,73-1,78

KIT REVISIONE ALBERO MOTORE

CRANKSHAFT REVISION KIT

100200830

PIAGGIO 125: Vespa
Primavera ET3
VMA2-VMB1



1	Cuscinetto | *Bearing*	20-47-14
1	Cuscinetto | *Bearing*	17-47-14
1	Paraolio Blu | *Blue Oil seal*	22,7-47-7/7,5
1	Paraolio Blu | *Blue Oil seal*	19-32-7
1	Paraolio Blu | *Blue Oil seal*	30-47-6
1	Anello | *O Ring*	15,88-2,62
1	Anello | *O Ring*	6,75-2
2	Anello | *O Ring*	-
1	Anello | *O Ring*	8,73-1,78

100200840

PIAGGIO 125-150-200:
Vespa PX
VNX-VLX-VSX2-VNX2-VSX2



1	Cuscinetto | *Bearing*	25-38-15
1	Cuscinetto | *Bearing*	25-62-12
1	Paraolio Blu | *Blue Oil seal*	24-35-6
1	Paraolio Blu | *Blue Oil seal*	31-62-4,3/5,8
1	Paraolio Blu | *Blue Oil seal*	27-47-6
1	Anello | *O Ring*	15,88-2,62
1	Anello | *O Ring*	6,75-2
1	Anello | *O Ring*	11,11-1,78
1	Anello | *O Ring*	123-2,1

100200850

PIAGGIO 150: Vespa Sprint • Vespa GL • Vespa Super • Vespa GTR
VLA-VLB-VLN-VBC



2	Cuscinetti | *Bearings*	25-62-12
1	Paraolio Blu | *Blue Oil seal*	20-62-6,5
1	Paraolio Blu | *Blue Oil seal*	20-40/60-6
1	Paraolio Blu | *Blue Oil seal*	27-37-7
1	Anello | *O Ring*	15,88-2,62
1	Anello | *O Ring*	6,75-2
1	Anello | *O Ring*	11,11-1,78
1	Anello | *O Ring*	123-2,1

100200860

PIAGGIO 125-150: Vespa
PXE Arcobaleno
VNX-VLX-VSX2



1	Cuscinetto | *Bearing*	25-38-15
1	Cuscinetto | *Bearing*	25-62-12
1	Paraolio Blu | *Blue Oil seal*	31-62-4,3/5,8
1	Paraolio Blu | *Blue Oil seal*	24-35-6
1	Paraolio Blu | *Blue Oil seal*	30-47-6
1	Anello | *O Ring*	15,88-2,62
1	Anello | *O Ring*	6,75-2
1	Anello | *O Ring*	11,11-1,78
1	Anello | *O Ring*	123-2,1



Modello *Model*	CC	Da *From*	A *To*	Telaio *Frame*	OEM	Codice RMS Standard *RMS Standard Code*	Codice RMS Maggiorazioni *RMS Big bore code*
APRILIA							
Amico	50	1994	1994	HR	-	**100080040** **100080041**	-
Amico	50	1996	1998	HU010	-	**100080040** **100080041**	-
Amico Gl-Gle	50	1993	1995	HU	-	**100080040** **100080041**	-
Amico Lx- Sport-Cat	50	1992	1993	GC	-	**100080040** **100080041**	-
Gulliver	50	1995	1998	LH000	-	**100080030** **100080031**	**100080490**
Mojito Custom 2T Motore Piaggio	50	2004	2010	TF000\TFA00	831116	**100080250** **100080251**	-
Rally	50	1995	2003	MD000\MDH00	-	**100080030** **100080031**	**100080490**
Scarabeo	50	1993	1997	HS\LE	-	**100080030** **100080031**	**100080490**
Scarabeo	50	1998	1998	PF000\PF0100	-	**100080030** **100080031**	**100080490**
Scarabeo	50	1999	1999	PF0\PFG	-	**100080030** **100080031**	**100080490**
Scarabeo	50	2000	2005	PFG00\TH000	-	**100080030** **100080031**	**100080490**
Scarabeo 2T	50	2014	2014	THH00	831116	**100080250** **100080251**	-
Scarabeo 2T Eu2 Motore Piaggio	50	2010	2012	THG00	831116	**100080250** **100080251**	-
Scarabeo 2T Net	50	2009	2010	THG00	831116	**100080250** **100080251**	-
Scarabeo 4T Restyling Eu3	50	2006	2009	TGA00\TGB00	969603	**100080101**	-
Scarabeo Street 2T Restyling	50	2006	2009	THG00	831116	**100080250** **100080251**	-
Sonic	50	1998	2007	PB000\TL000	-	**100080030** **100080031**	**100080490**
Sport City One 2T	50	2008	2011	SBA00\TCA00	831116	**100080250** **100080251**	-
Sport City One 4T	50	2008	2010	SB000\SBC00	969603	**100080101**	-
Sr Iniezione E Carburatore	50	2014	2014	VFB00\VFD00\VFU00	833598	**100080090** **100080091**	-
Sr Motard 2T	50	2012	2014	LBMC	831116	**100080250** **100080251**	-
Sr R Factory Ie E Carburatore	50	2010	2014	VFB00\VFD00\VFU00	833598	**100080090** **100080091**	-
Sr R, R Factory	50	2004	2009	VFB00\VFD00\VFJ\U	833598	**100080090** **100080091**	-
Mojito	125	2008	2008	SZA00	831975	**100080531**	-
Sport City One 4T Euro3	125	2008	2011	SG000\SGC00	831975	**100080531**	-
Sr Motard	125	2012	2014	LBMM7	831975	**100080531**	-
ATALA/RIZZATO							
At10 25 Ac Byte	25	1997	2001	-	-	**100080641**	-
At10 50 Ac Byte	50	1997	2001	-	-	**100080641**	-
At12 50 Ac Hacker	50	1996	1999	-	-	**100080641**	-
At12 50 Ac Hacker Racing	50	1996	1999	-	-	**100080641**	-
BENELLI							
491 Gt	50	1998	1999	BA0102	-	**100080050** **100080051**	-
491 St	50	1999	2001	BA0102	-	**100080050** **100080051**	-
K2	50	1998	2001	BA0105	-	**100080050** **100080051**	-
BETA							
Ark 50 Ac	50	1997	2003	BS4C20	-	**100080030** **100080031**	-
Ark 50 Ac	50	2004	2007	BS4C40	-	**100080030** **100080031**	-



CILINDRI

CYLINDER

Modello *Model*	**CC**	**Da** *From*	**A** *To*	**Telaio** *Frame*	**OEM**	**Codice RMS Standard** *RMS Standard Code*	**Codice RMS Maggiorazioni** *RMS Big bore code*
Ark 50 Lc	50	1997	2003	BS4C00	-	**100080050** **100080051**	-
Eikon 50 Lc	50	1999	2003	BS5000	-	**100080050** **100080051**	-
Quadra 50	50	1997	2001	BS3	-	**100080030** **100080031**	-
DERBI							
Atlantis 2T	50	2010	2010	AL4AE2	831116	**100080250** **100080251**	-
Atlantis 2T Eu2	50	2007	2009		831116	**100080250** **100080251**	-
Atlantis 4T Eu2	50	2007	2007		969603	**100080101**	-
Atlantis 50-100 4T	50	2004	2006	AL1BE2\AT1B1A	969603	**100080101**	-
Atlantis O2	50	2002	2002	AL1A1A	831116	**100080250** **100080251**	-
Atlantis O2 Bullet	50	2003	2005	AL1AE2	831116	**100080250** **100080251**	-
Atlantis O2 City	50	2003	2006	AL1AE2	831116	**100080250** **100080251**	-
Atlantis O2 Red Bullet	50	2003	2003	AL1AE2	831116	**100080250** **100080251**	-
Atlantis O2 Two Chic	50	2005	2005	AL1AE2	831116	**100080250** **100080251**	-
Boulevard 2T	50	2009	2014	BR1A1A	831116	**100080250** **100080251**	-
Boulevard 4T Eu2 25 Km/H	50	2009	2009		969603	**100080101**	-
Gp1 E2	50	2003	2003	PREDXB	833598	**100080090** **100080091**	-
Gp1 Euro2	50	2005	2005	PR1A1A	833598	**100080090** **100080091**	-
Gp1 Open Eu2	50	2006	2009	PR1B1A	833598	**100080090** **100080091**	-
Gp1 Race Eu2	50	2005	2007	PR1A1A	833598	**100080090** **100080091**	-
Sonar 2T	50	2009	2009	LR1A1A	831116	**100080250** **100080251**	-
Vamos	50	1993	1995		-	**100080641**	-
Variant Sport 2T	50	2012	2012	SBA00	831116	**100080250** **100080251**	-
Boulevard 125-150	125	2003	2004	BL2B1A\BL3B1A	831975	**100080531**	-
Boulevard 125-150 Eu2	125	2004	2007		831975	**100080531**	-
Boulevard 4T Eu3	125	2008	2012	VTHM571	831975	**100080531**	-
Variant Sport 4T E3	125	2012	2012	SG000	831975	**100080531**	-
GILERA							
Dna	50	2005	2007	C2700	833598	**100080090** **100080091**	-
Dna Gp Experience	50	2003	2004	C2700	833598	**100080090** **100080091**	-
Ice	50	2001	2005	C3000	831116	**100080250** **100080251**	-
Runner Purejet	50	2002	2004	C36100	833598	**100080090** **100080091**	-
Runner Purejet	50	2005	2011	C46200	833598	**100080090** **100080091**	-
Runner Purejet St	50	2008	2008	C46200	833598	**100080090** **100080091**	-
Runner Sp	50	2005	2012	C46100	833598	**100080090** **100080091**	-
Runner Sp Special Edition	50	2007	2007	C46100	833598	**100080090** **100080091**	-
Runner Sp St & Simoncelli	50	2008	2009	C46100	833598	**100080090** **100080091**	-
Stalker	50	1997	2004	C1300	831116	**100080250** **100080251**	-
Stalker	50	2005	2011	C40100	831116	**100080250** **100080251**	-



Modello *Model*	CC	Da *From*	A *To*	Telaio *Frame*	OEM	Codice RMS Standard *RMS Standard Code*	Codice RMS Maggiorazioni *RMS Big bore code*
Stalker Naked	50	2008	2008	C40102	831116	**100080250** **100080251**	-
Stalker Special Edition	50	2007	2008	C40100	831116	**100080250** **100080251**	-
Storm Euro2	50	2007	2007	C29000	831116	**100080250** **100080251**	-
Typhoon Xr	50	2000	2000	C1900	831116	**100080250** **100080251**	-
HONDA							
Sfx 50	50	1996	2000	AF37A	-	**100080080**	-
Sgx 50 Sky	50	1997	2000	AF43G	-	**100080080**	-
Sh 50 Scoopy	50	1996	2000	AF40A	-	**100080080**	-
Sj 50 Bali	50	1995	1995	AF323	-	**100080080**	-
Sj 50 Bali	50	1996	2001	AF32E	-	**100080080**	-
Szx 50 S Super Sport X8R	50	1998	2002	AF49G	-	**100080080**	-
Szx 50 X Cross Sport X8R	50	1998	2000	AF49H	-	**100080080**	-
Sh 125	125	2001	2004	JF09A	-	**100080450**	-
Sh 125	125	2001	2004	JF09A	-	**100080720**	-
Sh 125 D I	125	2009	2009	JF23A	-	**100080450**	-
Sh 125 D I	125	2009	2009	JF23A	-	**100080720**	-
Sh 125 I	125	2005	2008	JF14A	-	**100080450**	-
Sh 125 I	125	2005	2008	JF14A	-	**100080720**	-
Sh 125 I	125	2009	2012	JF23B	-	**100080450**	-
Sh 125 I	125	2009	2012	JF23B	-	**100080720**	-
Sh 150	150	2001	2004	KF04A	-	**100080440**	-
Sh 150	150	2001	2004	KF04A	-	**100080730**	-
Sh 150 D I	150	2009	2011	KF10A	-	**100080440**	-
Sh 150 D I	150	2009	2011	KF10A	-	**100080730**	-
Sh 150 I	150	2005	2008	KF08A	-	**100080440**	-
Sh 150 I	150	2005	2008	KF08A	-	**100080730**	-
ITALJET							
Dragster 50	50	1998	2003	ZJTDRG000	-	**100080050** **100080051**	-
Formula 50 Ac Dd	50	1995	1997	ZJTFRH2BS	-	**100080641**	-
Formula 50 Ac Dd Race	50	1996	1996	ZJTFRH2BS	-	**100080641**	-
Formula 50 Ac Dd Sport	50	1998	1998	ZJTFRH2BS	-	**100080641**	-
Formula 50 Ac Dt	50	1997	2003	ZJTFRH2BS	-	**100080641**	-
Torpedo 50 2T	50	1998	1999	ZJTTR0000	-	**100080641**	-
Torpedo 50 2T	50	2000	2003	TP	-	**100080641**	-
Velocifero 50	50	1995	2000	CS2VF10	-	**100080641**	-
KEEWAY							
Atv 50 Ec2	50	2006	2006	LBBSAB00	204200041000	**100080581**	-
Atv 50 Ec2	50	2006	2006	LBBSAB00	-	**100080711**	-
F-Act	50	2007	2008	SFCS005003	204200041000	**100080581**	-
F-Act	50	2007	2008	SFCS005003	-	**100080711**	-
F-Act Evo	50	2009	2009	SFCS005005	204200041000	**100080581**	-
F-Act Evo	50	2009	2009	SFCS005005	-	**100080711**	-
Flash	50	2007	2008	SFLS005000	204200041000	**100080581**	-
Flash	50	2007	2008	SFLS005000	-	**100080711**	-
Focus	50	2006	2006	TSYTABMP1	204200041000	**100080581**	-
Focus	50	2006	2006	TSYTABMP1	-	**100080711**	-
Hurricane	50	2006	2006	TSYTAB201	204200041000	**100080581**	-
Hurricane	50	2006	2006	TSYTAB201	-	**100080711**	-
Hurricane	50	2007	2008	SHRC005001	204200041000	**100080581**	-
Hurricane	50	2007	2008	SHRC005001	-	**100080711**	-
Matrix	50	2007	2008	SMTX005002	204200041000	**100080581**	-
Matrix	50	2007	2008	SMTX005002	-	**100080711**	-
Ry6	50	2010	2010	SRY6005000	204200041000	**100080581**	-
Ry6	50	2010	2010	SRY6005000	-	**100080711**	-
Ry8	50	2008	2008	SRY8005000	204200041000	**100080581**	-



CILINDRI

CYLINDER

Modello *Model*	**CC**	**Da** *From*	**A** *To*	**Telaio** *Frame*	**OEM**	**Codice RMS Standard** *RMS Standard Code*	**Codice RMS Maggiorazioni** *RMS Big bore code*
Ry8	50	2008	2008	SRY8005000	-	**100080711**	-
Ry8 Sport	50	2007	2010	SRY8005001	204200041000	**100080581**	-
Ry8 Sport	50	2007	2010	SRY8005001	-	**100080711**	-
Matrix	125	2006	2006	TSYTABMN1	204200041000	**100080581**	-
Matrix	125	2006	2006	TSYTABMN1	-	**100080711**	-
KYMCO							
Agility 2T R16	50	2010	2012	C11000	00102511	**100080461**	-
Agility 2T R16	50	2010	2012	C11000	00102511	**100080551**	-
Agility 4T Carry	50	2011	2011	U65010	00112053	**100080381**	**100080540**
Agility 4T R10	50	2006	2006	U60010	00103618	**100080381**	**100080540**
Agility 4T R10	50	2007	2008	U60080	00103618	**100080381**	**100080540**
Agility 4T R12	50	2007	2008	U60050	00103618	**100080381**	**100080540**
Agility 4T R16	50	2008	2009	C10000	00103618	**100080381**	**100080540**
Agility 4T R16	50	2012	2012	C10000	00112053	**100080381**	**100080540**
Agility Plus 4T	50	2014	2014	12000	00112053	**100080381**	**100080540**
Agility R12	50	2005	2005	U60000	00103618	**100080381**	**100080540**
Agility Rs	50	2009	2009	U600B0	00112053	**100080381**	**100080540**
Agility Rs Naked 2T	50	2010	2010	U10000	00102511	**100080461**	-
Agility Rs Naked 2T	50	2010	2010	U10000	00102511	**100080551**	-
Dink Classic Euro2	50	2003	2003	T80000	00102511	**100080461**	-
Dink Classic Euro2	50	2003	2003	T80000	00102511	**100080551**	-
Dink Lc	50	1998	2002	SH10	00102511	**100080461**	-
Dink Lc	50	1998	2002	SH10	00102511	**100080551**	-
Filly	50	1998	2000	SD10AC	00103618	**100080381**	**100080540**
Filly Lx	50	2001	2002	S21000	00103618	**100080381**	**100080540**
Like 2T	50	2009	2009	D10000	00102511	**100080461**	-
Like 2T	50	2009	2009	D10000	00102511	**100080551**	-
Like 4T	50	2009	2009	D11000	00112053	**100080381**	**100080540**
People	50	1999	2000	B10001	00102511	**100080461**	-
People	50	1999	2000	B10001	00102511	**100080551**	-
People	50	2004	2004	BA10AG	00102511	**100080461**	-
People	50	2004	2004	BA10AG	00102511	**100080551**	-
People Euro2	50	2003	2003	B10020	00102511	**100080461**	-
People Euro2	50	2003	2003	B10020	00102511	**100080551**	-
People Euro2	50	2008	2008	B10020	00102511	**100080461**	-
People Euro2	50	2008	2008	B10020	00102511	**100080551**	-
People Euro2	50	2011	2011	B10020	00102511	**100080461**	-
People Euro2	50	2011	2011	B10020	00102511	**100080551**	-
People S	50	2005	2008	B90000	00102511	**100080461**	-
People S	50	2005	2008	B90000	00102511	**100080551**	-
Super 8	50	2007	2007	U70000	00103618	**100080381**	**100080540**
Super 8 2T	50	2009	2009	U90000	00102511	**100080461**	-
Super 8 2T	50	2009	2009	U90000	00102511	**100080551**	-
Super 8 2T	50	2013	2013	U91000	00102511	**100080461**	-
Super 8 2T	50	2013	2013	U91000	00102511	**100080551**	-
Super 8 4T	50	2009	2009	U70300	00103618	**100080381**	**100080540**
Super 8 4T	50	2013	2013	U71000	00112053	**100080381**	**100080540**
Top Boy	50	1997	2000	SF10AG\SF10AF	00102511	**100080461**	-
Top Boy	50	1997	2000	SF10AG\SF10AF	00102511	**100080551**	-
Vitality 2T	50	2004	2004	U30000	00102511	**100080461**	-
Vitality 2T	50	2004	2004	U30000	00102511	**100080551**	-
Yup	50	2002	2002	S60000	00102511	**100080461**	-
Yup	50	2002	2002	S60000	00102511	**100080551**	-
Yup Euro2	50	2003	2003	S60010	00102511	**100080461**	-
Yup Euro2	50	2003	2003	S60010	00102511	**100080551**	-
Agility 4T	125	2006	2006	U62000	00123115	**100080391**	-
Agility 4T Euro3	125	2006	2008	U62001	00123115	**100080391**	-
Agility Carry	125	2011	2011	U62060	00123115	**100080391**	-



Modello *Model*	CC	Da *From*	A *To*	Telaio *Frame*	OEM	Codice RMS Standard *RMS Standard Code*	Codice RMS Maggiorazioni *RMS Big bore code*
Agility Plus	125	2014	2014	C21000	00123115	**100080391**	-
Agility Plus E4	125	2016	2016	C41000	00123115	**100080391**	-
Agility R16	125	2008	2012	C20000	00123115	**100080391**	-
Agility Rs	125	2009	2009	U62011	00123115	**100080391**	-
Like	125	2009	2009	D20000	00123115	**100080391**	-
Like Lx	125	2012	2012	D20000	00123115	**100080391**	-
Movie	125	1999	2000	SL25AA	00123116	**100080391**	-
Movie 125 Euro3	125	2006	2007	S50012	00123116	**100080391**	-
Movie Xl 125	125	2001	2001	S50010\S50000	00123116	**100080391**	-
Movie Xl 125-150 Euro2	125	2003	2004	S50011\S50001	00123116	**100080391**	-
People 125-150	125	1999	2000	B20000\B20001	00123116	**100080391**	-
People 125-150 Euro2	125	2003	2003	B20010\B20020	00123116	**100080391**	-
People Euro3	125	2007	2011	B20011	00123116	**100080391**	-
People One E4	125	2016	2016	D42000	00123115	**100080391**	-
People One I	125	2013	2013	D40000	00123115	**100080391**	-
People One I Dd	125	2015	2015	40000	00123115	**100080391**	-
People S	125	2005	2005	D10000	00123116	**100080391**	-
People S Dd Euro3	125	2007	2008	D10000	00123116	**100080391**	-
Super 8	125	2008	2009	U80100	00123115	**100080391**	-
Vivio 125-150	125	2000	2000	SL25AB\SL30AC	00123116	**100080391**	-
Agility R16	150	2008	2009	C30000	00112042	**100080401**	-
Agility R16 Plus E4	150	2016	2016	C42000	00112042	**100080401**	-
LML							
Star 150 2T	150	2000	2001	-	-	**100080630**	-
Star 150 4T	150	2010	2015	-	-	**100080780**	-
MALAGUTI							
F12 Phantom Lc Euro1	50	1999	2000	4700000	77114600	**100080050** **100080051**	-
F12 Phantom Lc Restyling Eu1	50	2001	2002	4700000	77114600	**100080050** **100080051**	-
F12 Phantom Lc Restyling Eu2	50	2002	2002	6200000	77114600	**100080050** **100080051**	-
F12 Phantom Lc Restyling Eu2-2.3	50	2003	2004	6200000	77117200	**100080050** **100080051**	-
F12 Phantom Lc Twin Disks	50	1998	1998	41	77113200	**100080050** **100080051**	-
F12R Phantom Lc	50	2007	2010	8201	77117200	**100080050** **100080051**	-
F15 Fire Fox	50	1996	1998	44	77113200	**100080050** **100080051**	-
F15 Fire Fox Euro2	50	2002	2003	44	77114600	**100080050** **100080051**	-
F15 Fire Fox Restyling Euro2-2.3	50	2003	2004	44	77117200	**100080050** **100080051**	-
F15 Fire Fox Twin Disks & Special	50	1998	1999	44	77113200	**100080050** **100080051**	-
F15 Fire Fox Twin Disks Digit Kat	50	1998	2000	4400000	77114600	**100080050** **100080051**	-
F15 Lc Restyling Euro 2	50	2004	2005	44000044	77117200	**100080050** **100080051**	-
F15 Lc-Tds Restyling Euro 1	50	2001	2001	4400000	77114600	**100080050** **100080051**	-
MBK							
Cw Booster	50	1990	1991	3WW	-	**100080040** **100080041**	-
Cw Booster (Ita)	50	1992	1994	3WW	-	**100080040** **100080041**	-
Cw R Booster Road (Ita)	50	1994	1995	4PA1	-	**100080040** **100080041**	-
Ya R Forte (Che-Ita)	50	1994	1996	4PC	-	**100080030** **100080031**	**100080490**
Yh Flipper Catalitico	50	1999	2000	5LD	-	**100080030** **100080031**	**100080490**



Modello *Model*	**CC**	**Da** *From*	**A** *To*	**Telaio** *Frame*	**OEM**	**Codice RMS Standard** *RMS Standard Code*	**Codice RMS Maggiorazioni** *RMS Big bore code*
Yq Nitro	50	1997	1998	5BR	-	**100080050** **100080051**	-
Yq Nitro	50	1999	2000	5LC	-	**100080050** **100080051**	-
Yq Nitro	50	2001	2002	5PE	-	**100080050** **100080051**	-
Yq Nitro Euro2	50	2003	2003	5SB	-	**100080050** **100080051**	-
PEUGEOT							
Buxy 50	50	1995	1997	VGA 427	-	**100080070**	-
Buxy 50 Rs	50	1996	1997	VGA 427	-	**100080070**	-
Elyseo 50 45 Km/H	50	2002	2003	VGA G1AAE	-	**100080070**	-
Elyseo 50 50 Km/H	50	1998	2001	VGA G1AAK	-	**100080070**	-
Elystar 50 Advantage	50	2006	2009	VGA G1AAP	-	**100080070**	-
Looxor 50	50	2002	2004	VGA B1AAAA	-	**100080070**	-
Speedake 50	50	1995	1997	VGA 427	-	**100080070**	-
Speedfight 1 50 Ac Dt	50	1997	1998	VGA S1B00A	-	**100080070**	-
Speedfight 1 50 Ac Dt	50	1999	2000	VGA S1B0KA	-	**100080070**	-
Speedfight 1 50 Lc Dd	50	1999	2000	VGA S1B0KB	753038	**100080201**	-
Speedfight 1 50 Lc Dt	50	1997	1998	VGA S1B00B	753038	**100080201**	-
Speedfight 2 50 Ac Dd Ultimate Edition	50	2008	2009	VGA S1BADA/GA	-	**100080070**	-
Speedfight 2 50 Ac Dt	50	2001	2001	VGA S1B0KA	-	**100080070**	-
Speedfight 2 50 Ac Dt	50	2002	2004	VGA S1BACA	-	**100080070**	-
Speedfight 2 50 Ac Dt	50	2005	2009	VGA S1BADA/GA	-	**100080070**	-
Speedfight 2 50 Ac Dt Iron-X	50	2007	2007	VGA S1BADA/GA	-	**100080070**	-
Speedfight 2 50 Ac Dt Motor Sport	50	2007	2007	VGA S1BADA/GA	-	**100080070**	-
Speedfight 2 50 Ac Dt Rally Victories	50	2006	2007	VGA S1BADA/GA	-	**100080070**	-
Speedfight 2 50 Ac Dt Rcup	50	2007	2009	VGA S1BADA/GA	-	**100080070**	-
Speedfight 2 50 Ac Dt Silver Sport	50	2004	2004	VGA S1BACA	-	**100080070**	-
Speedfight 2 50 Ac Dt Silver Sport	50	2005	2007	VGA S1BADA/GA	-	**100080070**	-
Speedfight 2 50 Ac Dt Wrc 307	50	2005	2005	VGA S1BADA/GA	-	**100080070**	-
Speedfight 2 50 Lc Dd	50	2001	2001	VGA S1B0KB	753038	**100080201**	-
Speedfight 2 50 Lc Dd	50	2002	2002	VGA S1B0EB	753038	**100080201**	-
Speedfight 2 50 Lc Dd	50	2003	2004	VGA S1BBAA	753038	**100080201**	-
Speedfight 2 50 Lc Dd	50	2005	2009	VGA S1BBBA/BBCA	753038	**100080201**	-
Speedfight 2 50 Lc Dd Furious	50	2003	2003	VGA S1BBAA	753038	**100080201**	-
Speedfight 2 50 Lc Dd Iron-X	50	2007	2007	VGA S1BBBA/BBCA	753038	**100080201**	-
Speedfight 2 50 Lc Dd Motor Sport	50	2007	2007	VGA S1BBBA/BBCA	753038	**100080201**	-
Speedfight 2 50 Lc Dd Rally Victories	50	2006	2007	VGA S1BBBA/BBCA	753038	**100080201**	-
Speedfight 2 50 Lc Dd Rcup	50	2007	2009	VGA S1BBBA/BBCA	753038	**100080201**	-
Speedfight 2 50 Lc Dd Silver Sport	50	2004	2004	VGA S1BBAA	753038	**100080201**	-
Speedfight 2 50 Lc Dd Silver Sport	50	2005	2007	VGA S1BBBA/BBCA	753038	**100080201**	-
Speedfight 2 50 Lc Dd Ultimate Edition	50	2008	2009	VGA S1BBBA/BBCA	753038	**100080201**	-
Speedfight 2 50 Lc Dd Wrc 206	50	2003	2004	VGA S1BBAA	753038	**100080201**	-
Speedfight 2 50 Lc Dd Wrc 307	50	2005	2005	S1BBBA/BBCA	753038	**100080201**	-
Speedfight 2 50 Lc Dd X-Race	50	2001	2001	VGA S1B0KB	753038	**100080201**	-
Speedfight 2 50 Lc Dd X-Race	50	2002	2002	VGA S1B0EB	753038	**100080201**	-
Speedfight 2 50 Lc Dd X-Race	50	2003	2003	VGA S1BBAA	753038	**100080201**	-
Squab 50	50	1996	1997	VGA S1A03	-	**100080070**	-
Sv 50 Lm Dt	50	1997	1998	VGA 395	-	**100080070**	-
Sv 50 Tt	50	1993	1997	VGA 395	-	**100080070**	-
Sv 50 Tt Junior	50	1993	1996	VGA 395	-	**100080070**	-
Tkr 50	50	2001	2001	VGA S1A0KB	-	**100080070**	-
Tkr 50	50	2002	2002	VGA S1A0KF	-	**100080070**	-
Tkr 50	50	2003	2004	VGA S1AAAA	-	**100080070**	-
Tkr 50	50	2005	2007	VGA S1AADA/AAGA	-	**100080070**	-
Tkr 50	50	2008	2009	-	-	**100080070**	-
Tkr 50 Furious	50	2003	2004	VGA S1AAAA	-	**100080070**	-



Modello *Model*	CC	Da *From*	A *To*	Telaio *Frame*	OEM	Codice RMS Standard *RMS Standard Code*	Codice RMS Maggiorazioni *RMS Big bore code*
Tkr 50 Furious	50	2005	2011	VGA S1AADA/AAGA	-	**100080070**	-
Tkr 50 Metal-X	50	2002	2002	VGA S1A0KF	-	**100080070**	-
Tkr 50 Metal-X	50	2003	2003	VGA S1AAAA	-	**100080070**	-
Tkr 50 Rally Victories	50	2006	2007	VGA S1AADA/AAGA	-	**100080070**	-
Tkr 50 Rcup	50	2008	2009	-	-	**100080070**	-
Tkr 50 Streetboard	50	2001	2001	VGA S1A0KB	-	**100080070**	-
Tkr 50 Streetzone	50	2003	2003	VGA S1AAAA	-	**100080070**	-
Tkr 50 Wrc 307	50	2005	2005	VGA S1AADA/AAGA	-	**100080070**	-
Trekker 50 Off Road	50	1998	2000	VGA S1A0KB	-	**100080070**	-
Trekker 50 Road	50	1998	2000	VGA S1A0KB	-	**100080070**	-
Trekker 50 Streetboard	50	1999	2000	VGA S1A0KB	-	**100080070**	-
Vivacity 50	50	1999	2001	VGA S1C0KA	-	**100080070**	-
Vivacity 50	50	2002	2002	VGA S1C0KF	-	**100080070**	-
Vivacity 50	50	2003	2004	VGA S1CAAAA	-	**100080070**	-
Vivacity 50 2	50	2005	2009	-	-	**100080070**	-
Vivacity 50 2 Blueline	50	2005	2005	-	-	**100080070**	-
Vivacity 50 2 Compact	50	2005	2007	-	-	**100080070**	-
Vivacity 50 2 Motorsport	50	2007	2009	-	-	**100080070**	-
Vivacity 50 2 Rs	50	2008	2008	-	-	**100080070**	-
Vivacity 50 2 Silver Sport	50	2005	2007	-	-	**100080070**	-
Vivacity 50 2 Sportline 4	50	2006	2009	-	-	**100080070**	-
Vivacity 50 Blueline	50	2004	2004	-	-	**100080070**	-
Vivacity 50 Compact	50	2003	2004	VGA S1C0EA	-	**100080070**	-
Vivacity 50 Silver Sport	50	2004	2004	-	-	**100080070**	-
Vivacity 50 Sportline	50	2001	2001	VGA S1C0KA	-	**100080070**	-
Vivacity 50 Sportline 2	50	2002	2002	VGA S1C0KF	-	**100080070**	-
Vivacity 50 Sportline 3	50	2003	2003	VGA S1CAAAA	-	**100080070**	-
Zenith 50 Lm	50	1996	1997	VGA 441	-	**100080070**	-
Zenith 50 Ln	50	1998	1998	VGA 441	-	**100080070**	-
Zenith 50 M	50	1995	1997	VGA 441	-	**100080070**	-
Zenith 50 N	50	1998	2000	VGA 441	-	**100080070**	-
PIAGGIO							
Bravo Erre 2	50	1975	1981	EEM1T\EEV1T	196121	**100080310**	**100080690**
Ciao	50	1980	1988	C7E2T\C7V4T	196121	**100080310**	**100080690**
Ciao Tre	50	1971	1999	CT31T	196121	**100080310**	**100080690**
Diesis	50	2001	2001	C3400	831116	**100080250** **100080251**	-
Fly 2T	50	2005	2007	C44100	831116	**100080250** **100080251**	-
Fly 2T	50	2010	2011	C44700	831116	**100080250** **100080251**	-
Fly 4T	50	2005	2007	C44200	969603	**100080101**	-
Fly 4T & 25-30 Km/H	50	2008	2011	C44500	969603	**100080101**	-
Fly 4T 2V	50	2013	2015	RP8C523	969603	**100080101**	-
Fly 4T 2V 25-30Km-H	50	2012	2017	RP8C522	969603	**100080101**	-
Fly 4T Motore Chn	50	2006	2007	C44500	969603	**100080101**	-
Free	50	1992	1994	FCS1T	487820	**100080010** **100080011**	-
Free Delivery	50	2000	2001	FCS2T	487820	**100080010** **100080011**	-
Free FI	50	1995	2002	FCS2T	487820	**100080010** **100080011**	-
Grillo	50	1989	1993	CXM\CXV	196121	**100080310**	**100080690**
Liberty	50	1997	2005	C1500	487820	**100080010** **100080011**	-
Liberty 2T	50	2006	2006	C42100	831116	**100080250** **100080251**	-
Liberty 2T	50	2007	2008	C42500	831116	**100080250** **100080251**	-
Liberty 2T Rst	50	2004	2004	C42100	831116	**100080250** **100080251**	-



CILINDRI

CYLINDER

Modello *Model*	**CC**	**Da** *From*	**A** *To*	**Telaio** *Frame*	**OEM**	**Codice RMS Standard** *RMS Standard Code*	**Codice RMS Maggiorazioni** *RMS Big bore code*
Liberty 2T Sport	50	2006	2006	C42106	831116	**100080250** **100080251**	-
Liberty 2T Sport	50	2007	2008	C42501	831116	**100080250** **100080251**	-
Liberty 4T	50	2000	2002	C2800	969603	**100080101**	-
Liberty 4T	50	2005	2008	C42400	969603	**100080101**	-
Liberty 4T Delivery - Single	50	2010	2014	C42401	969603	**100080101**	-
Liberty 4T Delivery Tnt	50	2009	2009	C42401	969603	**100080101**	-
Liberty 4T Ptt - Double - Nexive	50	2009	2017	C42402\C42404	969603	**100080101**	-
Liberty 4T Ptt (Deu)	50	2007	2012	C42406	969603	**100080101**	-
Liberty 4T Rst	50	2004	2004	C42200	969603	**100080101**	-
Liberty 4T Sport	50	2006	2008	C42405	969603	**100080101**	-
Liberty Moc 2T & Elle	50	2009	2013	C49100	831116	**100080250** **100080251**	-
Liberty Moc 4T & Elle	50	2009	2016	C49200	969603	**100080101**	-
Liberty Ptt Eu2	50	2004	2005	C37401	831116	**100080250** **100080251**	-
Nrg Extreme	50	1999	2000		487793	**100080021**	**100080560**
Nrg Mc3	50	2001	2004	C320\210	833598	**100080090** **100080091**	-
Nrg Power Dd	50	2005	2017	C45100	833598	**100080090** **100080091**	-
Nrg Power Dd Serie Speciale	50	2007	2012	C45100	833598	**100080090** **100080091**	-
Nrg Power Dt	50	2006	2015	C45300	831116	**100080250** **100080251**	-
Nrg Power Dt Serie Speciale	50	2007	2008	C45300	831116	**100080250** **100080251**	-
Nrg Power Purejet	50	2004	2011	C45200	833598	**100080090** **100080091**	-
Nrg Purejet	50	2002	2004	C320001	833598	**100080090** **100080091**	-
Nrg Purejet	50	2010	2010	C45200	833598	**100080090** **100080091**	-
Nrg Rst Mc2	50	1996	1998	C04000	487793	**100080021**	**100080560**
Sfera	50	1991	1993	NSL1T	487820	**100080010** **100080011**	-
Sfera Maquillage 2	50	1994	1994	SM51T	487820	**100080010** **100080011**	-
Sfera Rst	50	1995	1997	C0100	487820	**100080010** **100080011**	-
Si	50	1979	1988	SIM1T\SIV1T	196121	**100080310**	**100080690**
Superbravo	50	1985	1990	EEV3T	196121	**100080310**	**100080690**
Superbravo 3	50	1987	1990	EEC1T	196121	**100080310**	**100080690**
Typhoon	50	2001	2008	C29000	831116	**100080250** **100080251**	-
Typhoon	50	2009	2011	C48100	831116	**100080250** **100080251**	-
Typhoon 2T Euro2	50	2010	2016	LBMC501	831116	**100080250** **100080251**	-
Typhoon 2T Euro3 Ch	50	2011	2011	LBMC5	831116	**100080250** **100080251**	-
Vespa 50	50	1963	1967	V5A1T	122457	**100080521**	-
Vespa 50	50	1967	1971	VA51T	122457	**100080521**	-
Vespa 50 L	50	1966	1970	V5A1T	122457	**100080521**	-
Vespa 50 N	50	1963	1971	V5A1T	122457	**100080521**	-
Vespa 50 R	50	1969	1971	V5A1T	122457	**100080521**	-
Vespa 50 S	50	1963	1968	V5SA1T	122457	**100080521**	-
Vespa 50 Special	50	1970	1972	V5A2T	122457	**100080521**	-
Vespa 50 Special	50	1972	1975	V5B1T	122457	**100080521**	-
Vespa 50 Special	50	1975	1983	V5B3T	122457	**100080521**	-
Vespa 50 Special Elestart	50	1970	1972	V5A3T	122457	**100080521**	-
Vespa 50 Special Elestart	50	1972	1975	V5B2T	122457	**100080521**	-
Vespa 50 Special Elestart	50	1975	1976	V5B4T	122457	**100080521**	-



Modello *Model*	CC	Da *From*	A *To*	Telaio *Frame*	OEM	Codice RMS Standard *RMS Standard Code*	Codice RMS Maggiorazioni *RMS Big bore code*
Vespa Et4	50	2000	2005	C26100	969603	**100080101**	-
Vespa Lx 2T	50	2005	2013	C38101	831116	**100080250** **100080251**	-
Vespa Lx 2T Touring & 30Km	50	2010	2013	C38101	831116	**100080250** **100080251**	-
Vespa Lx 4T	50	2005	2009	C38300	969603	**100080101**	-
Vespa Lxv 2T	50	2006	2009	C38102	831116	**100080250** **100080251**	-
Vespa Lxv 2T Navy	50	2008	2008	C38102	831116	**100080250** **100080251**	-
Vespa Pk 50	50	1982	1984	V5X1T	122457	**100080521**	-
Vespa Pk 50 S	50	1982	1982	V5X2T	122457	**100080521**	-
Vespa Pk 50 Ss	50	1983	1983	V5S1T	122457	**100080521**	-
Vespa Pk 50 Ss Elestart	50	1983	1983	V5S1T	122457	**100080521**	-
Vespa Primavera 2T	50	2013	2017	C53200	831116	**100080250** **100080251**	-
Vespa Primavera 4T 2V 25 Km/H	50	2014	2017	C53300	969603	**100080101**	-
Vespa S 2T & College	50	2007	2012	C38103	831116	**100080250** **100080251**	-
Vespa Sprint 2T 2V	50	2014	2017	C53201	831116	**100080250** **100080251**	-
Vespa Sprint 4T 2V 25 Km/H	50	2014	2017	C53301	969603	**100080101**	-
Vespa Sprinter	50	1971	1973	V5SS2T	122457	**100080521**	-
Vespa Ss 50	50	1965	1971	V5SS1T	122457	**100080521**	-
Zip	50	1992	1993	SSL1T	487820	**100080010** **100080011**	-
Zip	50	2000	2004	C25000	831116	**100080250** **100080251**	-
Zip 2T	50	2008	2013	C25E0	831116	**100080250** **100080251**	-
Zip 4T	50	2000	2005	C25000	969603	**100080101**	-
Zip 4T	50	2006	2013	LBMC25C	969603	**100080101**	-
Zip 4T 25Km-H	50	2006	2016		969603	**100080101**	-
Zip Bimodale	50	1994	1997	BMZ1T	487820	**100080010** **100080011**	-
Zip Fast Raider Rst	50	1996	1997	C0700	487820	**100080010** **100080011**	-
Zip Sp	50	1996	2000	C1100	487793	**100080021**	**100080560**
Zip Sp	50	2001	2004	C250004	833598	**100080090** **100080091**	-
Zip Sp Euro2	50	2006	2013	C25000	833598	**100080090** **100080091**	-
Fly	125	2005	2007	M42100	831975	**100080531**	-
Fly Euro3	125	2007	2007	M57100	831975	**100080531**	-
Fly Euro3	125	2008	2011	M57200	831975	**100080531**	-
Hexagon Lx4	125	1998	1999	M1500	8271155	**100080060**	-
Liberty	125	1998	2000	M1100	827115	**100080060**	-
Liberty 4T 2V Euro3	125	2009	2012	M67100	831975	**100080531**	-
Liberty 4T 2V Ie Ptt - Ita	125	2012	2013	M38900	831975	**100080531**	-
Liberty 4T Euro3 Delivery - Single	125	2007	2015	M38602	831975	**100080531**	-
Liberty 4T Euro3 Delivery - Tnt - Nexive	125	2008	2015	P38602	831975	**100080531**	-
Liberty Rst Ptt	125	2005	2011	M38103	831975	**100080531**	-
Sfera	125	1995	1997	M0100	827115	**100080060**	-
Skipper 4T	125	2000	2002	M2100	831975	**100080531**	-
Typhoon 4T 2V Euro3	125	2010	2011	C5010	831975	**100080531**	-
Vespa Et4	125	1996	1998	M0400	8271155	**100080060**	-
Vespa Et4	125	1999	2002	M1900	831975	**100080531**	-
Vespa Lx	125	2005	2006	M44100	831975	**100080531**	-
Vespa Lx 4T Euro3 Touring	125	2010	2011	M68100	831975	**100080531**	-
Vespa Lx 4T FI	125	2009	2009	M44100	831975	**100080531**	-
Vespa Lx Euro 3	125	2006	2008	M44300	831975	**100080531**	-
Vespa Lx Euro 3 Ie	125	2009	2011	M68100	831975	**100080531**	-



CILINDRI

CYLINDER

Modello *Model*	**CC**	**Da** *From*	**A** *To*	**Telaio** *Frame*	**OEM**	**Codice RMS Standard** *RMS Standard Code*	**Codice RMS Maggiorazioni** *RMS Big bore code*
Vespa Lxv 4T Euro3	125	2006	2009	M44301	831975	**100080531**	-
Vespa Lxv 4T Navy Euro3	125	2007	2008	M44301	831975	**100080531**	-
Vespa Lxv Ie 4T	125	2010	2013	P68102	831975	**100080531**	-
Vespa Nuova 125	125	1965	1967	VMA1T	151981	**100080650**	-
Vespa P 125 E	125	1981	1981	VNX2T	840087	**100080680**	-
Vespa P 125 X	125	1977	1982	VNX1T	840087	**100080680**	-
Vespa Pk 125	125	1982	1985	VMX1T	196771	**100080420**	-
Vespa Pk 125 S	125	1982	1985	VMX5T	196771	**100080420**	-
Vespa Pk 125 S Elestart	125	1983	1983	VMX5T	840087	**100080680**	-
Vespa Primavera 125	125	1967	1983	VMA2T	151981	**100080650**	-
Vespa Px 125	125	2011	2016	M74100	840087	**100080680**	-
Vespa Px 125 30 Anni	125	2007	2008	M09302	840087	**100080680**	-
Vespa Px 125 E Arcobaleno	125	1983	1983	VNX2T	840087	**100080680**	-
Vespa Px 125 E Elestart	125	1984	1984	VNX2T	840087	**100080680**	-
Vespa Px 125 E Freno A Disco	125	1998	2001	VNX2T	840087	**100080680**	-
Vespa Px 125 Euro 2	125	2007	2008	M09302	840087	**100080680**	-
Vespa S 4T Euro 3	125	2007	2008	M44302	831975	**100080531**	-
Vespa S 4T Ie & College	125	2009	2011	M68101	831975	**100080531**	-
Cosa 1 150	150	1988	1991	VLR1T	244172	**100080370**	-
Cosa 2 150	150	1991	1997	VLR1	244172	**100080370**	-
Cosa 2 150	150	1991	1997	VLR1	244172	**100080670**	-
Vespa 150	150	1963	1966	VBB2T	90628	**100080660**	-
Vespa Gl 150	150	1963	1964	VLA1T	90628	**100080660**	-
Vespa P 150 S	150	1978	1984	VBX1T	244172	**100080370**	-
Vespa P 150 X	150	1978	1981	VLX1T	244172	**100080370**	-
Vespa Px 150	150	2011	2016	M74200	244172	**100080370**	-
Vespa Px 150	150	2011	2016	M74200	244172	**100080670**	-
Vespa Px 150 E	150	1981	1981	VLX1T	244172	**100080370**	-
Vespa Px 150 E	150	1981	1981	VLX1T	244172	**100080670**	-
Vespa Px 150 E Arcobaleno	150	1983	1983		244172	**100080370**	-
Vespa Px 150 E Arcobaleno	150	1983	1983		244172	**100080670**	-
Vespa Px 150 E Elestart	150	1984	1984		244172	**100080370**	-
Vespa Px 150 E Elestart	150	1984	1984		244172	**100080670**	-
Vespa Px 150 E Freno A Disco	150	1998	2001	VLX1T	244172	**100080370**	-
Vespa Px 150 E Freno A Disco	150	1998	2001	VLX1T	244172	**100080670**	-
Vespa Sprint 150	150	1965	1974	VLB1T	90628	**100080660**	-
Vespa Super 150	150	1965	1979	VBC1T	90628	**100080660**	-
Cosa 1 200	200	1988	1997	VSR1T	414708	**100080430**	-
Cosa 1 200	200	1988	1997	VSR1T	414708	**100080700**	-
Vespa P 200 X	200	1977	1977	VSX1T	414708	**100080430**	-
Vespa P 200 X	200	1977	1977	VSX1T	414708	**100080700**	-
Vespa Px 200 E	200	1977	1982	VSX1T	414708	**100080430**	-
Vespa Px 200 E	200	1977	1982	VSX1T	414708	**100080700**	-
Vespa Px 200 E Freno A Disco	200	1998	2001	VSX1T	414708	**100080430**	-
Vespa Px 200 E Freno A Disco	200	1998	2001	VSX1T	414708	**100080700**	-
Vespa Px 200 E Arcobaleno	200	1983	1984	VSX1T	414708	**100080430**	-
Vespa Px 200 E Arcobaleno	200	1983	1984	VSX1T	414708	**100080700**	-
Vespa Px 200 E Elestart	200	1981	1990	VSX1T	414708	**100080430**	-
Vespa Px 200 E Elestart	200	1981	1990	VSX1T	414708	**100080700**	-
Vespa Rally 200	200	1972	1979	VSE1T	414708	**100080430**	-
Vespa Rally 200	200	1972	1979	VSE1T	414708	**100080700**	-
Ape Car P2-P3	220	1978	1985	AF3T	828864	**100080181**	-
Ape Mp P501-P601	220	1978	1996	MPR2-M2-V2	243117	**100080191**	-
Ape Tm P602	220	1982	1983	ATM1T	828864	**100080181**	-
Ape Tm P703 FI2	220	1999	2007	ATM2T\3T	828864	**100080181**	-
Ape Tm P703-P703V, FI2	220	1984	2005	ATM2T\T	828864	**100080181**	-



Modello *Model*	CC	Da *From*	A *To*	Telaio *Frame*	OEM	Codice RMS Standard *RMS Standard Code*	Codice RMS Maggiorazioni *RMS Big bore code*
SUZUKI							
Ah50 Address	50	1992	1995	CA1GA	-	**100080641**	-
Aj Zz Sepia S	50	1995	1997	CA1HC	-	**100080641**	-
Ap50 R-T (R7)	50	1994	1997	CA1JA	-	**100080641**	-
Ay Ayw Katana V-Y	50	1997	2000	AA	-	**100080641**	-
Uf Estilete	50	2000	2000	BA112	-	**100080641**	-
YAMAHA							
Bw'S Bump	50	1997	1998	4SB	-	**100080040** **100080041**	-
Bw'S Next Generation	50	1997	1998	4SB	-	**100080040** **100080041**	-
Bw'S Original	50	1997	1998	3WW\4VV	-	**100080040** **100080041**	-
Cs Jog R	50	2002	2002	SA221	-	**100080030** **100080031**	**100080490**
Cw Rs Spy	50	1995	1998	4UP1\4UP2\4UP4	-	**100080040** **100080041**	-
Yh Why Euro1	50	1999	2000	SA031	-	**100080030** **100080031**	**100080490**
Ym Breeze	50	1994	1995	4KH1\4KH3	-	**100080030** **100080031**	**100080490**
Yn Neo'S Euro2	50	2002	2003	SA211	-	**100080030** **100080031**	**100080490**
Yq Aerox	50	1997	1998	5BR\5BR00	-	**100080050** **100080051**	-
Yq Aerox	50	2001	2002	SA141	-	**100080050** **100080051**	-
Yq Aerox	50	2004	2007	SA144	-	**100080050** **100080051**	-
Yq Aerox R	50	1999	2000	5BR00	-	**100080050** **100080051**	-
Yq L Aerox Euro2	50	2003	2003	SA144	-	**100080050** **100080051**	-
Mt125	125	2015	2016	RE114	-	**100080341** **100080740**	**100080621**
Mt125A	125	2015	2016	RE115	-	**100080341** **100080740**	**100080621**
Mt125A	125	2017	2019	RE292	-	**100080341** **100080740**	**100080621**
Vp X-City	125	2008	2011	SE431	-	**100080341** **100080740**	**100080621**
Wr125R	125	2009	2011	DE071	-	**100080341** **100080740**	**100080621**
Wr125X	125	2009	2014	DE072	-	**100080341** **100080740**	**100080621**
Xn Teo'S	125	2000	2000	SE041	-	**100080350**	-
Xq Maxster	125	2001	2002	SE051	-	**100080350**	-
Yp125 Majesty	125	1998	2000	SE021	-	**100080350**	-
Yp125 Majesty	125	2001	2002	SE061	-	**100080350**	-
Yp125E Majesty	125	2003	2006	SE066	-	**100080350**	-
Yp125E Majesty	125	2007	2009	SE068	-	**100080350**	-
Yp125R X-Max	125	2008	2009	SE321	-	**100080341** **100080740**	**100080621**
Yp125R X-Max	125	2010	2012	SE541	-	**100080341** **100080740**	**100080621**
Yp125R X-Max	125	2012	2013	SG252	-	**100080341** **100080740**	**100080621**
Yp125R X-Max	125	2014	2014	SE681	-	**100080341** **100080740**	**100080621**
Yp125R X-Max	125	2015	2016	SE681\SE686	-	**100080341** **100080740**	**100080621**
Yp125R X-Max Abs	125	2011	2011	SE544	-	**100080341** **100080740**	**100080621**
Yp125Ra X-Max Abs	125	2013	2013	SE644	-	**100080341** **100080740**	**100080621**



Modello *Model*	**CC**	**Da** *From*	**A** *To*	**Telaio** *Frame*	**OEM**	**Codice RMS Standard** *RMS Standard Code*	**Codice RMS Maggiorazioni** *RMS Big bore code*
Yp125Ra X-Max Abs	125	2014	2016	SE684	-	**100080341** **100080740**	**100080621**
Yp125Ra X-Max Abs	125	2017	2017	SEC31	-	**100080341** **100080740**	**100080621**
Yp125Ra X-Max Abs	125	2018	2019	SEE61	-	**100080341** **100080740**	**100080621**
Yp125Ra X-Max Abs Iron Max	125	2019	2019	SEE64	-	**100080341** **100080740**	**100080621**
Yzf-R125	125	2008	2016	RE061	-	**100080341** **100080740**	**100080621**
Yzf-R125A	125	2015	2016	RE112	-	**100080341** **100080740**	**100080621**
Yzf-R125A	125	2017	2018	RE291	-	**100080341** **100080740**	**100080621**

MOTORE PIAGGIO 50 CC ARIA -
PIAGGIO ENGINE 50 CC AIR COOLED

100080010



RICAMBI - *SPARE PARTS*



100090010 - 40 mm
100090014 - 40,4 mm
100090018 - 40,8 mm



100100010 - 40 mm
100100014 - 40,4 mm
100100018 - 40,8 mm



100689040

Ø40 mm
Canna esterna Ø53,5 mm - *External hole Ø53,5 mm*
Spinotto Ø12 mm - *Piston pin Ø12 mm*

GILERA: R.O. 487820
PIAGGIO: R.O. 487820

MOTORE PIAGGIO 50 CC ARIA -
PIAGGIO ENGINE 50 CC AIR COOLED

100080011



RICAMBI - *SPARE PARTS*



100090011 - 40 mm
100090015 - 40,4 mm



100100015 - 40,4 mm



100689040

Ø40 mm
Canna esterna Ø53,5 mm - *External hole Ø53,5 mm*
Spinotto Ø12 mm - *Piston pin Ø12 mm*

GILERA: R.O. 487820
PIAGGIO: R.O. 487820

MOTORE PIAGGIO 50 CC ARIA -
PIAGGIO ENGINE 50 CC AIR COOLED

100080250



RICAMBI - *SPARE PARTS*



100090010 - 40 mm
100090014 - 40,4 mm
100090018 - 40,8 mm



100100010 - 40 mm
100100014 - 40,4 mm
100100018 - 40,8 mm



100689040

Ø40 mm
Canna esterna Ø52 mm - *External hole Ø52 mm*
Spinotto Ø12 mm - *Piston pin Ø12 mm*

APRILIA: R.O. 831116
DERBI: R.O. 831116
GILERA: R.O. 831116
PIAGGIO: R.O. 831116

MOTORE PIAGGIO 50 CC ARIA -
PIAGGIO ENGINE 50 CC AIR COOLED

100080251



RICAMBI - *SPARE PARTS*



100090011 - 40 mm
100090015 - 40,4 mm



100100015 - 40,4 mm



100689040

Ø40 mm
Canna esterna Ø52 mm - *External hole Ø52 mm*
Spinotto Ø12 mm - *Piston pin Ø12 mm*

APRILIA: R.O. 831116
DERBI: R.O. 831116
GILERA: R.O. 831116
PIAGGIO: R.O. 831116

MOTORE PIAGGIO 50 CC < 2000 LIQUIDO - *PIAGGIO ENGINE 50 CC < 2000 LIQUID COOLED*

100080021



RICAMBI - *SPARE PARTS*



100090011 - 40 mm
100090015 - 40,4 mm



100100015 - 40,4 mm



100689050

Ø40 mm
Spinotto Ø12 mm - *Piston pin Ø12 mm*

PIAGGIO: R.O. 487793

MOTORE PIAGGIO 50 CC > 2000 LIQUIDO - *PIAGGIO ENGINE 50 CC > 2000 LIQUID COOLED*

100080090



RICAMBI - *SPARE PARTS*



100090010 - 40 mm
100090014 - 40,4 mm
100090018 - 40,8 mm



100100010 - 40 mm
100100014 - 40,4 mm
100100018 - 40,8 mm



100689070

Ø40 mm
Spinotto Ø12 mm - *Piston pin Ø12 mm*

APRILIA: R.O. 833598
DERBI: R.O. 833598
GILERA: R.O. 833598
PIAGGIO: R.O. 833598

MOTORE PIAGGIO 50 CC > 2000 LIQUIDO - *PIAGGIO ENGINE 50 CC > 2000 LIQUID COOLED*

100080091



RICAMBI - *SPARE PARTS*



100090011 - 40 mm
100090015 - 40,4 mm



100100015 - 40,4 mm



100689070

Ø40 mm
Spinotto Ø12 mm - *Piston pin Ø12 mm*

APRILIA: R.O. 833598
DERBI: R.O. 833598
GILERA: R.O. 833598
PIAGGIO: R.O. 833598

MOTORE PIAGGIO 50 CC 4T - *PIAGGIO ENGINE 50 CC 4 STROKES*

100080101



RICAMBI - *SPARE PARTS*



100090101 - 39 mm
100090104 - 39,4 mm
100090108 - 39,8 mm



100100101 - 39 mm
100100104 - 39,4 mm
100100108 - 39,8 mm



100689101

Ø39 mm
Spinotto Ø13 mm - *Piston pin Ø13 mm*

APRILIA: R.O. 969603
DERBI: R.O. 969603
PIAGGIO: R.O. 969603



MOTORE PIAGGIO 125 CC 4T -
PIAGGIO ENGINE 125 CC 4 STROKES

100080531



RICAMBI - *SPARE PARTS*


-


100100531 - 57 mm


-

Ø57 mm
In ghisa - *Cast iron material*
Spinotto Ø15 mm - *Piston pin Ø15 mm*

APRILIA: R.O. 831975
DERBI: R.O. 831975
PIAGGIO: R.O. 831975

MOTORE LML 150 CC 2T -
LML ENGINE 150 CC 2 STROKES

GOETZE®

100080630



RICAMBI - *SPARE PARTS*


100090630 - 57,8 mm
100090632 - 58 mm
100090634 - 58,2 mm


-


100684110

Ø57,8 mm
Fasce pistone da 2 mm - *Piston rings 2 mm*

LML

MOTORE LML 150 CC 4T -
LML ENGINE 150 CC 4 STROKES

GOETZE®

100080780 NEW



RICAMBI - *SPARE PARTS*


-


-


-

Ø57 mm

LML

MOTORE PIAGGIO CIAO 50 CC -
PIAGGIO CIAO ENGINE 50 CC

100080310



RICAMBI - *SPARE PARTS*


100090314 - 38,4 mm
100090316 - 38,6 mm
100090318 - 38,8 mm


100100314 - 38,4 mm
100100316 - 38,6 mm
100100318 - 38,8 mm


100684000

Ø38,2 mm
Spinotto Ø10 mm - *Piston pin Ø10 mm*

PIAGGIO: R.O. 196121

MOTORE PIAGGIO VESPA PX - PE 150 CC - *PIAGGIO VESPA PX - PE ENGINE 150 CC*

GOETZE®

100080670



RICAMBI - *SPARE PARTS*

Per 100080370
100090418 - 57,8 mm

Per 100080670
100090670 - 57,8 mm
100090676 - 58,4 mm
100090678 - 58,6 mm

-

100684110

Ø57,8 mm
Fasce pistone da 2,5 mm - *Piston rings 2,5 mm*
Spinotto Ø15 mm - *Piston pin Ø15 mm*

PIAGGIO: R.O. 244172

MOTORE PIAGGIO VESPA SPRINT 150 CC - *PIAGGIO VESPA SPRINT ENGINE 150 CC*

GOETZE®

100080660



RICAMBI - *SPARE PARTS*

Per 100080410
100090414 - 57,4 mm
100090416 - 57,6 mm

Per 100080660
100090660 - 57 mm
100090664 - 57,4 mm
100090666 - 57,6 mm

-

100684080

Ø57 mm
Fasce pistone da 2,5 mm - *Piston rings 2,5 mm*
Spinotto Ø15 mm - *Piston pin Ø15 mm*

PIAGGIO: R.O. 90628

MOTORE PIAGGIO VESPA PK 125 CC - *PIAGGIO VESPA PK ENGINE 125 CC*

100080420



RICAMBI - *SPARE PARTS*

100090424 - 55,4 mm
100090426 - 55,6 mm

-

100703090

Ø55 mm
Spinotto Ø15 mm - *Piston pin Ø15 mm*

PIAGGIO: R.O. 196771

MOTORE PIAGGIO VESPA PE 200 CC - *PIAGGIO VESPA PE ENGINE 200 CC*

100080700



RICAMBI - *SPARE PARTS*

-

-

100704010

Ø66,5 mm

PIAGGIO: R.O. 414708

MOTORE PIAGGIO VESPA 50 CC - *PIAGGIO VESPA ENGINE 50 CC*

100080521



RICAMBI - *SPARE PARTS*

100090521 - 38,4 mm
100090528 - 38,8 mm
100090529 - 39 mm

100100521 - 38,4 mm
100100528 - 38,8 mm
100100529 - 39 mm

100684040

Ø38,4 mm
3 Travasi - *3 Intake ports*
Spinotto Ø12 mm - *Piston pin Ø12 mm*

PIAGGIO: R.O. 122457

MOTORE PIAGGIO VESPA PX 125 CC - *PIAGGIO VESPA PX ENGINE 125 CC*

GOETZE®

100080680



RICAMBI - *SPARE PARTS*

100090680 - 52,5 mm
100090684 - 52,9 mm
100090686 - 53,1 mm

-

100684110

Ø52,5 mm
Fasce pistone da 2,5 mm - *Piston rings 2,5 mm*
Spinotto Ø15 mm - *Piston pin Ø15 mm*

PIAGGIO: R.O. 840087

MOTORE PIAGGIO VESPA PRIMAVERA 125 CC - *PIAGGIO ENGINE VESPA PRIMAVERA 125 CC*

100080650



RICAMBI - *SPARE PARTS*

-

-

-

Ø55 mm

PIAGGIO: R.O. 151981

MOTORE PIAGGIO APE CAR 220 CC - *PIAGGIO ENGINE APE CAR 220 CC*

100080181



RICAMBI - *SPARE PARTS*

100090181 - 68 mm

100100180 - 68 mm
100100186 - 68,6 mm
100100188 - 68,8 mm

100703080
100705320

Ø68 mm
Spinotto Ø18 mm - *Piston pin Ø18 mm*

PIAGGIO: R.O. 828864

MOTORE PIAGGIO APE MP 220 CC - *PIAGGIO ENGINE APE MP 220 CC*

100080191



RICAMBI - *SPARE PARTS*

100090181 - 68 mm
100090186 - 68,6 mm
100090188 - 68,8 mm

100100180 - 68 mm
100100186 - 68,6 mm
100100188 - 68,8 mm

100703080
100705320

Ø68 mm
Spinotto Ø18 mm - *Piston pin Ø18 mm*

PIAGGIO: R.O. 243117

MOTORE MINARELLI ORIZZONTALE 50 CC - *MINARELLI HORIZONTAL ENGINE 50 CC*

100080030



RICAMBI - *SPARE PARTS*

100090030 - 40 mm
100090034 - 40,4 mm
100090038 - 40,8 mm

100100030 - 40 mm
100100034 - 40,4 mm
100100038 - 40,8 mm

100689010

Ø40 mm
Spinotto Ø10 mm - *Piston pin Ø10 mm*

APRILIA
BETA
MALAGUTI
MBK
SYM
YAMAHA

MOTORE MINARELLI ORIZZONTALE 50 CC - *MINARELLI HORIZONTAL ENGINE 50 CC*

100080031



RICAMBI - *SPARE PARTS*

100090031 - 40 mm
100090035 - 40,4 mm

100100031 - 40 mm
100100035 - 40,4 mm

100689010

Ø40 mm
Spinotto Ø10 mm - *Piston pin Ø10 mm*

APRILIA
BETA
MALAGUTI
MBK
SYM
YAMAHA

MOTORE MINARELLI VERTICALE 50 CC - *MINARELLI VERTICAL ENGINE 50 CC*

100080040



RICAMBI - *SPARE PARTS*

100090030 - 40 mm
100090034 - 40,4 mm
100090038 - 40,8 mm

100100030 - 40 mm
100100034 - 40,4 mm
100100038 - 40,8 mm

100689000

Ø40 mm
Spinotto Ø10 mm - *Piston pin Ø10 mm*

APRILIA
MBK
YAMAHA

MOTORE MINARELLI VERTICALE 50 CC - *MINARELLI VERTICAL ENGINE 50 CC*

100080041



RICAMBI - *SPARE PARTS*

100090031 - 40 mm
100090035 - 40,4 mm

100100031 - 40 mm
100100035 - 40,4 mm

100689000

Ø40 mm
Spinotto Ø10 mm - *Piston pin Ø10 mm*

APRILIA
MBK
YAMAHA

MOTORE MINARELLI 50 CC LIQUIDO - *MINARELLI ENGINE 50 CC LIQUID COOLED*

100080050



RICAMBI - *SPARE PARTS*

100090030 - 40 mm
100090034 - 40,4 mm
100090038 - 40,8 mm

100100030 - 40 mm
100100034 - 40,4 mm
100100038 - 40,8 mm

100689020

Ø40 mm
Spinotto Ø10 mm - Piston pin Ø10 mm

BENELLI
BETA
ITALJET
MALAGUTI: R.O. 77117200
MBK
YAMAHA

MOTORE MINARELLI 50 CC LIQUIDO - *MINARELLI ENGINE 50 CC LIQUID COOLED*

100080051



RICAMBI - *SPARE PARTS*

100090031 - 40 mm
100090035 - 40,4 mm

100100031 - 40 mm
100100035 - 40,4 mm

100689020

Ø40 mm
Spinotto Ø10 mm - Piston pin Ø10 mm

BENELLI
BETA
ITALJET
MALAGUTI: R.O. 77117200
MBK
YAMAHA

MOTORE MINARELLI AM6 50 CC LIQUIDO - *MINARELLI ENGINE AM6 50 CC LIQUID COOLED*

100080111



RICAMBI - *SPARE PARTS*


100090111 - 40,3 mm


100100111 - 40,3 mm


100689670

Ø40,3 mm
Spinotto Ø12 mm - *Piston pin Ø12 mm*
Imposte guarnizioni sulla testa cilindro - *Gaskets caves on cylinder head*

APRILIA
BETA
YAMAHA
Motori Minarelli AM3-AM4-AM5-AM6

MOTORE KYMCO 50 CC - *KYMCO ENGINE 50 CC*

100080381



RICAMBI - *SPARE PARTS*


100090381 - 39 mm


-


100680381

Ø39 mm
Spinotto Ø13 mm - *Piston pin Ø13 mm*

KYMCO: R.O. 00103618

MOTORE KYMCO 125 CC - *KYMCO ENGINE 125 CC*

100080391



RICAMBI - *SPARE PARTS*


100090391 - 52,4 mm


-


100680391

Ø52,4 mm
Spinotto Ø15 mm - *Piston pin Ø15 mm*

KYMCO: R.O. 00123115

MOTORE KYMCO 150 CC - *KYMCO ENGINE 150 CC*

100080401



RICAMBI - *SPARE PARTS*


100090401 - 57,4 mm


-


100680401

Ø57,4 mm
Spinotto Ø15 mm - *Piston pin Ø15 mm*

KYMCO: R.O. 00112042

MOTORE KYMCO 50 CC 2T ARIA -
KYMCO ENGINE 50 CC 2 STROKES AIR COOLED

100080461



RICAMBI - *SPARE PARTS*


100090461 - 39 mm


100100461 - 39 mm


-

Ø39 mm
Canna esterna Ø51 mm - *External hole Ø51 mm*
Spinotto Ø12 mm - *Piston pin Ø12 mm*

KYMCO: R.O. 00102511

MOTORE KYMCO 50 CC 2T ARIA -
KYMCO ENGINE 50 CC 2 STROKES AIR COOLED

100080551



RICAMBI - *SPARE PARTS*


-


-


-

Ø39 mm
Canna esterna Ø49 mm - *External hole Ø49 mm*
Spinotto Ø12 mm - *Piston pin Ø12 mm*

KYMCO: R.O. 00102511

MOTORE SUZUKI 50 CC 2T ARIA -
ENGINE SUZUKI 50 CC 2 STROKES AIR COOLED

100080641



RICAMBI - *SPARE PARTS*


100090641


-


100680840

Ø41 mm

ATALA
DERBI
MALAGUTI
SUZUKI

MOTORE KEEWAY 50 CC 2T ARIA -
KEEWAY ENGINE 50 CC 2 STROKES AIR COOLED

100080711



RICAMBI - *SPARE PARTS*


100090471 - 40 mm


100100471 - 40 mm


100689010

Ø40 mm
Scarico circolare - *Round exhaust*

KEEWAY

MOTORE KEEWAY 50 CC 2T ARIA -
KEEWAY ENGINE 50 CC 2 STROKES AIR COOLED

100080581



RICAMBI - *SPARE PARTS*

-

-

-

Ø40 mm
Scarico ovale - *Oval exhaust*
Spinotto Ø12 mm - *Piston pin Ø12 mm*

KEEWAY: R.O. 204200041000

MOTORE PEUGEOT 50 CC 2T -
PEUGEOT ENGINE 50 CC 2 STROKES

100080070



RICAMBI - *SPARE PARTS*

100090070 - 40 mm
100090074 - 40,4 mm

100100070 - 40 mm
100100074 - 40,4 mm

100689030

Ø40 mm
Spinotto Ø12 mm - *Piston pin Ø12 mm*

PEUGEOT

MOTORE PEUGEOT 50 CC 2T LIQUIDO -
PEUGEOT ENGINE 50 CC LIQUID COOLED

100080201



RICAMBI - *SPARE PARTS*

100090201 - 40 mm

100100201 - 40 mm

-

Ø40 mm
Spinotto Ø12 mm - *Piston pin Ø12 mm*

PEUGEOT: R.O. 753038

MOTORE YAMAHA 125 CC -
YAMAHA ENGINE 125 CC

100080341



RICAMBI - *SPARE PARTS*

100090341 - 52 mm

-

-

Ø52 mm
Spinotto Ø14 mm - *Piston pin Ø14 mm*

YAMAHA

MOTORE YAMAHA 125 CC - *YAMAHA ENGINE 125 CC*

100080350



RICAMBI - *SPARE PARTS*

-

-

100689140

Ø53,7 mm

YAMAHA

MOTORE HONDA 150 CC LIQUIDO - *HONDA ENGINE 150 CC LIQUID COOLED*

100080440



RICAMBI - *SPARE PARTS*

100090440 - 57,5 mm

100100440 - 57,5 mm

100689090
100680440

Ø57,5 mm
Spinotto Ø14 mm - *Piston pin Ø14 mm*

HONDA

MOTORE HONDA 125 CC LIQUIDO - *HONDA ENGINE 125 CC LIQUID COOLED*

100080450



RICAMBI - *SPARE PARTS*

100090450 - 52,4 mm

100100450 - 52,4 mm

100689080
100680450

Ø52,4 mm
Spinotto Ø14 mm - *Piston pin Ø14 mm*

HONDA

MOTORE HONDA 50 CC 2T ARIA - *HONDA ENGINE 50 CC 2 STROKES AIR COOLED*

100080080



RICAMBI - *SPARE PARTS*

100090080 - 39 mm
100090084 - 39,4 mm
100090088 - 39,8 mm

100100080 - 39 mm
100100084 - 39,4 mm
100100088 - 39,8 mm

100689060

Ø39 mm
Spinotto Ø12 mm - *Piston pin Ø12 mm*

HONDA

GRUPPI TERMICI RACING - *RACING CYLINDER KITS*

Utilizzo esclusivo per uso agonistico, vietato l'uso su strade pubbliche | *Only for racing use, the use on public road is forbidden*

MOTORE MINARELLI ORIZZONTALE - *MINARELLI HORIZONTAL ENGINE*

100080490



RICAMBI - *SPARE PARTS*



100090550 - 47 mm



100100550 - 47 mm



100689730

Ø47 mm
Spinotto Ø10 mm - *Piston pin Ø10 mm*

APRILIA
MALAGUTI
MBK
YAMAHA

MOTORE PIAGGIO VESPA/APE - *PIAGGIO ENGINE VESPA/APE*

100080281



RICAMBI - *SPARE PARTS*



100090280 - 47 mm
100090284 - 47,4 mm
100090288 - 47,8 mm



100100280 - 47 mm
100100284 - 47,4 mm
100100288 - 47,8 mm



-

Ø47 mm
Spinotto Ø12 mm - *Piston pin Ø12 mm*
3 Travasi - *3 Intake ports*

PIAGGIO

MOTORE PIAGGIO VESPA/APE - *PIAGGIO ENGINE VESPA/APE*

100080271



RICAMBI - *SPARE PARTS*



100090271 - 50 mm
100090274 - 50,4 mm
100090278 - 50,8 mm



100100271 - 50 mm
100100274 - 50,4 mm
100100278 - 50,8 mm



-

Ø50 mm
Spinotto Ø12 mm - *Piston pin Ø12 mm*
3 Travasi - *3 Intake ports*

PIAGGIO

MOTORE PIAGGIO VESPA/APE - *PIAGGIO ENGINE VESPA/APE*

100080141



RICAMBI - *SPARE PARTS*



100090141 - 55 mm
100090144 - 55,4 mm
100090148 - 55,8 mm



100100141 - 55 mm
100100144 - 55,4 mm
100100148 - 55,8 mm



-

Ø55 mm
Spinotto Ø12 mm - *Piston pin Ø12 mm*
6 Travasi - *6 Intake ports*

PIAGGIO



GRUPPI TERMICI RACING - *RACING CYLINDER KITS*

Utilizzo esclusivo per uso agonistico, vietato l'uso su strade pubbliche | *Only for racing use, the use on public road is forbidden*

MOTORE PIAGGIO > 2000 LIQUIDO - *PIAGGIO ENGINE > 2000 LIQUID COOLED*

100080560



RICAMBI - *SPARE PARTS*



100090560 - 47 mm



100100550 - 47 mm



100689760

Ø47 mm
Spinotto Ø12 mm - *Piston pin Ø12 mm*

PIAGGIO

MOTORE PIAGGIO CIAO - *PIAGGIO ENGINE CIAO*

100080690



RICAMBI - *SPARE PARTS*



-



-



-

Ø43 mm
Spinotto Ø10 mm - *Piston pin Ø10 mm*

PIAGGIO

MOTORE KYMCO 4T - *KYMCO ENGINE 4T*

100080540 NEW



RICAMBI - *SPARE PARTS*



100090540 - 47 mm



100100540 - 47 mm



-

Ø47 mm
Spinotto Ø13 mm - *Piston pin Ø13 mm*
Fornito senza testa cilindro - *Cylinder head not included*

KYMCO

MOTORE YAMAHA 150 CC - *YAMAHA ENGINE 150 CC*

100080621



RICAMBI - *SPARE PARTS*



-



-



100680461

Ø60,5 mm
Fornito senza testa cilindro - *Cylinder head not included*

YAMAHA

MOTORE HONDA 125 CC LIQUIDO - *HONDA ENGINE 125 CC LIQUID COOLED*

GOETZE®

100080720



RICAMBI - *SPARE PARTS*


100090720 - 52,4 mm


100100720 - 52,4 mm


100680720

Ø52,4 mm
Spinotto Ø14 mm - *Piston pin Ø14 mm*

HONDA

MOTORE HONDA 150 CC LIQUIDO - *HONDA ENGINE 150 CC LIQUID COOLED*

GOETZE®

100080730



RICAMBI - *SPARE PARTS*


100090730 - 58 mm


100100730 - 58 mm


100680730

Ø58 mm
Spinotto Ø14 mm - *Piston pin Ø14 mm*

HONDA

MOTORE YAMAHA 125 CC - *YAMAHA ENGINE 125 CC*

GOETZE®

100080740



RICAMBI - *SPARE PARTS*


100090740 - 52 mm


100100740 - 52 mm


100680740

Ø52 mm
Spinotto Ø14 mm - *Piston pin Ø14 mm*

YAMAHA



100070010

PER CILINDRO PIAGGIO RAFFREDDAMENTO AD ARIA 50CC | *FOR PIAGGIO AIR COOLED CYLINDER 50CC*

GILERA 50: Stalker 94-11 • Stalker Naked 08 • Stalker Special Edition 07-08 • Storm 94-95 • Easy Moving 95-96 • Typhoon 94-97 • Typhoon X 98-99 • Typhoon XR 00
R.O. 2865344
PIAGGIO 50: Free 92-94 • Free FL 95-98 • Liberty 97-05 • Liberty 2T 06-08 • Liberty PTT Euro2 04-05 • Sfera RST 95-97 • Sfera Maquillage • Vespa LX 2T 05-13 • Vespa LXV 2T 06-09 • Vespa ET2 97-98 Zip 94-97 • Zip 92-96 • Zip Fast Raider 93-97 • Zip RST 96-98
R.O. 2865344



100070020

PER CILINDRO PIAGGIO RAFFREDDAMENTO A LIQUIDO <2000 | *FOR PIAGGIO LIQUID COOLED CYLINDER <2000*

GILERA 50: Runner 97-00
R.O. 2895134
PIAGGIO 50: Quartz 92-96 • NTT 95-96 • NRG 94-96 • NRG RST MC2 96-98 • Zip SP 96-97
R.O. 2895134



100070021

PER CILINDRO PIAGGIO RAFFREDDAMENTO A LIQUIDO <2000 | *FOR PIAGGIO LIQUID COOLED CYLINDER <2000*

GILERA 50: Runner 97-00
R.O. 2895134
PIAGGIO 50: Quartz 92-96 • NTT 95-96 • NRG 94-96 • NRG RST MC2 96-98 • Zip SP 96-97
R.O. 2895134



100070030

PER CILINDRI MINARELLI ORIZZONTALE | *FOR MINARELLI HORIZONTAL CYLINDER*

MINARELLI - MBK - YAMAHA
R.O. 77701400



100070040

PER CILINDRI MINARELLI VERTICALE | *FOR MINARELLI VERTICAL CYLINDER*

APRILIA - MBK - YAMAHA
R.O. 3VLE11110000



100070050

PER CILINDRI MINARELLI A LIQUIDO | *FOR MINARELLI LIQUID COOLED CYLINDER*

MINARELLI - MBK - YAMAHA
R.O. 77701600





100070060

PER CILINDRO PEUGEOT AD ARIA | *FOR PEUGEOT AIR COOLED CYLINDER*

PEUGEOT: Elyseo 99 • SV Geo 91-95 • Zenith L 94-96 • Zenith N 97-98 • Zenith LN • Zenith LS 97-98 • Speedake 95-97 • Speedfight 97-98 • Squab 95-97 • Trekker 98 • Buxy 94-97



100070071

PER CILINDRI MINARELLI AM6 / AM3-4-5 50CC | *FOR MINARELLI AM6 / AM3-4-5 CYLINDER 50CC*

APRILIA - BETA
HM - HRD
MOTORHISPANIA
PEUGEOT - RIEJU
YAMAHA



100070081

PER CILINDRO PIAGGIO RAFFREDDAMENTO A LIQUIDO <2000 | *FOR PIAGGIO LIQUID COOLED CYLINDER <2000*

APRILIA 50: SR R, R Factory 04-09 • SR R Factory ie Iniezione e Carburatore 10-14 • SR Iniezione e Carburatore 14 • SR Street 03-12
R.O. 826490
DERBI 50: GP1 01-03 • GP1 E2 03 • GP1 Euro2 05 • GP1 Open Euro2 06-09 • GP1 Race Euro 2 05-07
R.O. 826490
GILERA 50: DNA • DNA Gp Experience 03-06 • Runner Poggiali 02 • Runner SP 02-04 • Runner SP 07 • Runner SP 10-12 • Runner 97-00
R.O. 826490
PIAGGIO 50: NRG MC3 01-04 • NRG Power DD 05-17 • NRG Power DD Serie Speciale 07-12 • Zip SP 01-04 • Zip SP Euro2 06-13
R.O. 826490



100070120

PER CILINDRO PIAGGIO 100080310 | *FOR PIAGGIO CYLINDER 100080310*

PIAGGIO 50: Ciao
R.O. 124533



100070123

PER CILINDRO LML 100080630 | *FOR LML CYLINDER 100080630*

LML 150: 2T



100070521

PER CILINDRO PIAGGIO 100080521 | *FOR PIAGGIO CYLINDER 100080521*

PIAGGIO 50: Vespa • Vespa S • Vespa SS • Vespa PK • Vespa PK S • Ape
R.O. 112515





121850201

DADO TESTA CILINDRO M7 | *CYLINDER HEAD NUT M7*
Confezione 10 pz. | *10 pcs Packing*

MOTORI MINARELLI - ***MINARELLI ENGINE***



121850430

DADO TESTA CILINDRO - MARMITTA - CARROZZERIA M6X1 | *CYLINDER HEAD - MUFFLER - BODYWORK NUT M6X1*
Confezione 10 pz. | *10 pcs Packing*

GILERA-PIAGGIO 50-125-150-180-200-250-500 -





PISTONI - FASCE ELASTICHE

PISTON - PISTON RINGS

		PISTONI COMPLETI PER CILINDRI RMS *PISTONS FOR RMS CYLINDERS*			KIT FASCE ELASTICHE PER PISTONI RMS *PISTON RINGS FOR RMS PISTONS*		
Applicazioni *Applications*	**CC**	**Ø pistone mm** *Ø piston mm*	**Codice RMS** *RMS Code*	**Codice a barre** *Barcode*	**Ø fasce elastiche mm** *Ø piston rings mm*	**Codice RMS** *RMS Code*	**Codice a barre** *Barcode*
Aprilia - Beta - Malaguti - Mbk - Sym - Minarelli Orizzontale - (Per *For* 100080031)	50	40	**100090031**		40 x 1,5	**100100031**	
	50	40,4	**100090035**		40,4 x 1,2	**100100035**	
Minarelli - MBK - Yamaha (Raffr. Aria e Liquido) | *Minarelli - MBK - Yamaha (Liquid and air cooled)*	50	40	**100090030**		40 x 1,5	**100100030**	
		40,4	**100090034**		40,4 x 1,5	**100100034**	
		40,8	**100090038**		40,8 x 1,5	**100100038**	
Minarelli - MBK - Yamaha (Verticale) | *Minarelli - MBK - Yamaha (Vertical)*	50	-	**-**	-	40 x 1,2	**100100040**	
		-	**-**	-	40,4 x 1,2	**100100044**	
		-	**-**	-	40,8 x 1,2	**100100048**	
Minarelli - AM6 - Aprilia - Beta - HM - Peugeot - Yamaha	50	40,3	**100090111**		40,3 x 1,2	**100100111**	
Piaggio - Gilera - (Per *For* 100080011)	50	40	**100090011**		-	**-**	-
		40,4	**100090015**		40,4 x 1,2	**100100015**	
Piaggio - Gilera	50	40	**100090010**		40 x 1,5	**100100010**	
		40,4	**100090014**		40,4 x 1,5	**100100014**	
		40,8	**100090018**		40,8 x 1,5	**100100018**	
Piaggio Ciao - Spinotto Ø 10 mm | *Pin Ø 10 mm*	50	38,4	**100090314**		38,4	**100100314**	
		38, 6	**100090316**		38,6	**100100316**	
		38,8	**100090318**		38,8	**100100318**	
Piaggio 4T	50	39	**100090101**		39	**100100101**	
		39,4	**100090104**		39,4	**100100104**	
		39,8	**100090108**		39,8	**100100108**	
Piaggio - Vespa	50	38,4	**100090521**		38,4	**100100521**	
		38,8	**100090528**		38,8	**100100528**	
		39	**100090529**		39	**100100529**	
Honda Sh	50	39	**100090080**		39 x 1,5 39 x 1,2	**100100080**	
		39,4	**100090084**		39,4 x 1,5 39,4 x 1,2	**100100084**	
		39,8	**100090088**		39,8 x 1,5 39,8 x 1,2	**100100088**	
Keeway	50	40	**100090471**		40	**100100471**	
Kymco 2T	50	39	**100090461**		39	**100100461**	
Kymco 50 4T - (Per *For* 100080380)	50	39	**100090380**		39	**100100380**	
Kymco 50 4T - (Per *For* 100080381)	50	39	**100090381**		-	**-**	-
Peugeot (Raffr. Aria) | *Peugeot (Air cooled)*	50	40	**100090070**		40 x 1,5	**100100070**	
		40,4	**100090074**		40,4 x 1,5	**100100074**	



		PISTONI COMPLETI PER CILINDRI RMS *PISTONS FOR RMS CYLINDERS*			KIT FASCE ELASTICHE PER PISTONI RMS *PISTON RINGS FOR RMS PISTONS*		
Applicazioni *Applications*	**CC**	**Ø pistone mm** *Ø piston mm*	**Codice RMS** *RMS Code*	**Codice a barre** *Barcode*	**Ø fasce elastiche mm** *Ø piston rings mm*	**Codice RMS** *RMS Code*	**Codice a barre** *Barcode*
Peugeot (Raffr. Acqua) | *Peugeot (Liquid cooled)*	50	40	**100090201**		40	**100100201**	
Suzuki 2T (Raffr. Aria) | *Suzuki 2T (Air cooled)*	-	41	**100090641**		-	**-**	-
Kymco 4T - (Per *For* 100080540)	72	47	**100090540**		47	**100100540**	
Aprilia - Beta - Malaguti - Mbk - Sym - Minarelli Orizzontale - (Per *For* 100080490)	75	47	**100090550**		47 x 1,2	**100100550**	
Aprilia - Mbk - Yamaha - Minarelli Verticale - (Per *For* 100080500)	75	47	**100090550**		47 x 1,2	**100100550**	
Aprilia - Benelli - Beta - Italjet - Malaguti - Mbk - Yamaha Minarelli Lc - (Per *For* 100080510)	75	47	**100090550**		47 x 1,2	**100100550**	
Minarelli - MBK - Yamaha (Per *For* 100080210) (Per *For* 100080220) (Per *For* 100080230)	75	-	**-**	-	47,4 x 1,2	**100100214**	
		-	**-**	-	47,8 x 1,2	**100100218**	
Derbi - Gilera - Piaggio - (Per *For* 100080480 - 100080560)	75	47	**100090560**		47 x 1,2	**100100550**	
Gilera - Piaggio Lc - (Per *For* 100080560)	75	47	**100090560**		47 x 1,2	**100100550**	
Piaggio 2T - (Per *For* 100080610)	75	47	**100090580**		47 x 1,2	**100100550**	
Piaggio - Gilera (Per *For* 100080240) (Per *For* 100080320) (Per *For* 100080330)	75	-	**-**	-	47,4 x 1,2	**100100214**	
		-	**-**	-	47,8 x 1,2	**100100218**	
Piaggio - Vespa - Ape	75	47	**100090280**		47 x 1,5	**100100280**	
		47,4	**100090284**		47,4 x 1,5	**100100284**	
		47,8	**100090288**		47,8 x 1,5	**100100288**	
Piaggio - Vespa - Ape	85	50	**100090271**		50 x 1,5	**100100271**	
		50,4	**100090274**		50,4 x 1,5	**100100274**	
		50,8	**100090278**		50,8 x 1,5	**100100278**	
Piaggio - Vespa - Ape	100	55	**100090141**		55 x 1,5	**100100141**	
		55,4	**100090144**		55,4 x 1,5	**100100144**	
		55,8	**100090148**		55,8 x 1,5	**100100148**	
Piaggio: Liberty - Sfera - Vespa ET4 4T - (Per *For* 100080060)	125	57	**100090060**		-	**-**	-
Piaggio: Liberty - Vespa Lx - (Per *For* 100080531)	125	-	**-**	-	57	**100100531**	
Piaggio Vespa Pk 125	125	-	**-**	-	55	**100100420**	
		55,4	**100090424**		-	**-**	-
		55,6	**100090426**		-	**-**	-
Piaggio Vespa Px (Per *For* 10 008 0680) Fasce 2,5 mm | *2,5 mm Piston rings* GOETZE®	125	52,5	**100090680**		-	**-**	-
		52,9	**100090684**		-	**-**	-
		53,1	**100090686**		-	**-**	-
Honda Sh 125 - (Per *For* 10 008 0450)	125	52,4	**100090450**		52,4	**100100450**	



PISTONI - FASCE ELASTICHE

PISTON - PISTON RINGS

		PISTONI COMPLETI PER CILINDRI RMS *PISTONS FOR RMS CYLINDERS*			KIT FASCE ELASTICHE PER PISTONI RMS *PISTON RINGS FOR RMS PISTONS*		
Applicazioni *Applications*	**CC**	**Ø pistone mm** *Ø piston mm*	**Codice RMS** *RMS Code*	**Codice a barre** *Barcode*	**Ø fasce elastiche mm** *Ø piston rings mm*	**Codice RMS** *RMS Code*	**Codice a barre** *Barcode*
Honda Sh 125 - (Per *For* 10 008 0720) GOETZE®	125	52,4	**100090720**		52,4	**100100720**	
Kymco 125 - (Per *For* 10 008 0390)	125	52,4	**100090390**		52,4	**100100390**	
Kymco 125 - (Per *For* 10 008 0391)	125	52,4	**100090391**		-	-	-
Yamaha 125 - (Per *For* 10 008 0340)	125	52	**100090340**		-	-	-
Yamaha 125 - (Per *For* 10 008 0341)	125	52	**100090341**		-	-	-
Yamaha 125 - (Per *For* 10 008 0740) GOETZE®	125	52	**100090740**		52	**100100740**	
Honda Sh 150 - (Per *For* 10 008 0150)	150	58	**100090150**		-	-	-
		58,4	**100090154**		58,4	**100100154**	
		58,8	**100090158**		58,8	**100100158**	
Honda Sh 150 - (Per *For* 10 008 0440)	150	57,5	**100090440**		57,5	**100100440**	
Honda Sh 150 - (Per *For* 10 008 0730) GOETZE®	150	58	**100090730**		58	**100100730**	
Kymco 150 - (Per *For* 10 008 0401)	150	57,4	**100090401**		-	-	-
LML 150 cc 2T (Per *For* 10 008 0630) Fasce 2 mm | *2 mm Piston rings* GOETZE®	150	57,8	**100090630**		-	-	-
		58	**100090632**		-	-	-
		58,2	**100090634**		-	-	-
Piaggio Vespa Px - Sprint		57,6	**100090416**		-	-	-
Piaggio Vespa Px - Pe (Per *For* 10 008 0670) Fasce 2,5 mm | *2,5 mm Piston rings* GOETZE®	150	57,8	**100090670**		-	-	-
		58,4	**100090676**		-	-	-
		58,6	**100090678**		-	-	-
Piaggio Vespa Sprint (Per *For* 10 008 0660) Fasce 2,5 mm | *2,5 mm Piston rings* GOETZE®	150	57	**100090660**		-	-	-
		57,4	**100090664**		-	-	-
		57,6	**100090666**		-	-	-
Piaggio Ape - Spinotto Ø 18 mm | *Pin Ø 18 mm*	220	-	-	-	68,4 x 2,5	**100100184**	
		-	-	-	68,6 x 2,5	**100100186**	
		-	-	-	68,8 x 2,5	**100100188**	
Piaggio Ape - Spinotto Ø 16 mm | *Pin Ø 16 mm*	220	68	**100090360**		68 x 2,5	**100100180**	
		68,4	**100090364**		68,4 x 2,5	**100100184**	
		68,6	**100090366**		68,6 x 2,5	**100100186**	
		68,8	**100090368**		68,8 x 2,5	**100100188**	

Modello *Model*	CC	Da *From*	A *To*	OEM	Codice RMS *RMS Code*	Note *Notes*
AIXAM						
Serie 400 Mac (Kubota Diesel)	400	1992	-	-	**100609360**	
Serie 400 Sl (Kubota Diesel)	400	1992	-	-	**100609360**	
APRILIA						
Atlantic	125	2003	2005	AP8580128	**100609041**	
Leonardo	125	1996	2002	AP0256450	**100609021**	
Leonardo St	125	2001	2004	AP0256450	**100609021**	
Mojito	125	2003	2007	AP8580128	**100609041**	
Scarabeo	125	2003	2006	AP8580128	**100609041**	
Scarabeo Ie Light	125	2009	2010	AP3HAA000309	**100609490**	
Scarabeo Ie Light 125-200	125	2011	2012	AP3HAA000309	**100609490**	
Scarabeo Light	125	2007	2008	AP3HAA000309	**100609490**	
Scarabeo Motore Piaggio Eu3	125	2006	2006	AP8580128	**100609041**	
Scarabeo Motore Rotax	125	1999	2004	AP0256451	**100609021**	
Sport City	125	2004	2006	AP8580128	**100609041**	
Sport City Euro3	125	2006	2008	AP8580128	**100609041**	
Atlantic Eu3 125-250	250	2006	2008	AP8580128	**100609041**	
Scarabeo Light	250	2006	2008	AP8580128	**100609041**	
Rxv 4.5/5.5	450	2009	2011	AP9150166	**100609801**	
Rxv 4.5/5.5 - Sxv 4.5/5.5	450	2008	2008	AP9150166	**100609801**	
Rxv 4.5/5.5 - Sxv 4.5/5.5 Pikes Peak	450	2009	2009	AP9150166	**100609801**	
Rxv 4.5/5.5 - Sxv 4.5/5.5 Replica	450	2008	2008	AP9150166	**100609801**	
Sxv 4.5/5.5	450	2009	2011	AP9150166	**100609801**	
Atlantic	500	2001	2004	AP8560163	**100609071**	
Atlantic Sprint 400-500	500	2005	2008	AP8560163	**100609071**	
Scarabeo	500	2003	2006	AP8560163	**100609071**	
Rxv 4.5/5.5 - Sxv 4.5/5.5	550	2006	2007	AP9150166	**100609801**	
Pegaso	600	1990	1991	AP0256185	**100609201**	
Moto' 6.5	650	1995	1999	AP0256185	**100609201**	
Pegaso	650	1992	1996	AP0256185	**100609201**	
Pegaso 3	650	1997	2000	AP0256185	**100609201**	
Pegaso Ie	650	2001	2004	AP0256185	**100609201**	
Pegaso Strada(Fun)-Factory-Trail	660	2005	2009	AP8520017	**100609290**	
Etv Capo Nord - Rally	1000	2001	2003	AP0256187	**100609581**	
Etv Capo Nord Abs	1000	2004	2007	AP0256187	**100609581**	
Rst Futura	1000	2001	2003	AP0256187	**100609581**	
Rsv	1000	1998	2003	AP0256187	**100609581**	
Rsv R - Factory - Dream	1000	2004	2008	AP0256187	**100609581**	
Rsv R Tuono	1000	2002	2005	AP0256187	**100609581**	
Rsv Sp	1000	1999	2000	AP0256187	**100609581**	
Rsv4 Aprc R	1000	2011	2012	857187	**100609511**	
Rsv4 Aprc R Abs	1000	2013	2014	857187	**100609511**	
Rsv4 Factory - Sbk Racing	1000	2009	2010	857187	**100609511**	
Rsv4 Factory Aprc Abs	1000	2013	2014	857187	**100609511**	
Rsv4 Factory Aprc Std - Se	1000	2011	2012	857187	**100609511**	
Rsv4 R	1000	2009	2010	857187	**100609511**	
Rsv4 Racing Factory Le	1000	2015	2017	857187	**100609511**	
Rsv4 Rr	1000	2015	2017	857187	**100609511**	
Rsv4 Rr Racer Pack	1000	2015	2015	857187	**100609511**	
Sl Falco	1000	2000	2003	AP0256187	**100609581**	
Tuono R-Factory	1000	2006	2009	AP0256187	**100609581**	
Tuono V4 R Aprc Abs	1000	2014	2014	857187	**100609511**	
Tuono V4 R Std - Aprc	1000	2011	2013	857187	**100609511**	
Tuono V4 Factory	1100	2015	2017	857187	**100609511**	
Tuono V4 Rr	1100	2015	2017	857187	**100609511**	
ARCTIC						
Cat Cat 650 V2	650	2004	2005	-	**100609351**	
Cat Cat 650 V2 Automatik	650	2006	2007	-	**100609351**	
Cat H1 650	650	2006	2006	-	**100609351**	

Modello *Model*	CC	Da *From*	A *To*	OEM	Codice RMS *RMS Code*	Note *Notes*
BENELLI						
Adiva 125-150	125	2001	2002	R13440421A0	**100609041**	
899 Cafe' Racer	900	2010	2010	R180107101000	**100609761**	
Tnt 899	900	2008	2014	R180107101000	**100609761**	
Tnt 899 Century Racer	900	2011	2014	R180107101000	**100609761**	
Tnt 899S	900	2008	2009	R180107101000	**100609761**	
Tornado Le	900	2002	2003	R180107101000	**100609761**	
Tornado Rs	900	2004	2005	R180107101000	**100609761**	
Tornado Tre	900	2003	2003	R180107101000	**100609761**	
Tre-K 899	900	2009	2011	R180107101000	**100609761**	
Tnt	1130	2006	2006	R180107101000	**100609761**	
Tnt - Tnt Sport	1130	2004	2005	R180107101000	**100609761**	
Tnt Cafe' Racer	1130	2006	2014	R180107101000	**100609761**	
Tnt Century Racer	1130	2011	2014	R180107101000	**100609761**	
Tnt R	1130	2011	2014	R180107101000	**100609761**	
Tnt R160	1130	2010	2014	R180107101000	**100609761**	
Tnt Sport	1130	2006	2006	R180107101000	**100609761**	
Tnt Sport Evo	1130	2007	2007	R180107101000	**100609761**	
Tnt Titanium	1130	2005	2007	R180107101000	**100609761**	
Tornado Tre	1130	2007	2007	R180107101000	**100609761**	
Tre-K	1130	2007	2012	R180107114000	**100609761**	
Tre-K Amazonas	1130	2007	2012	R180107114000	**100609761**	
Tre-K Bianco/Rosso	1130	2008	2008	R180107114000	**100609761**	
BETA						
Evo 250 4T	250	2009	2017	1526060000	**100609571**	
Rev3 250 4T	250	2007	2008	1526060000	**100609571**	
Rr 250 4T Enduro	250	2005	2007	-	**100609211**	
Rr 250 4T Enduro	250	2005	2007	-	**100609541**	Filtro secondario | *Secondary filter*
Evo 300 4T	300	2009	2017	1526060000	**100609571**	
Evo 300 4T Factory	300	2016	2017	1526060000	**100609571**	
Alp 40 350	350	2004	2018	-	**100609450**	
Euro 350	350	2001	2006	-	**100609450**	
Jonathan 350	350	2002	2006	-	**100609450**	
M4 350	350	2004	2017	-	**100609450**	
Rr 400 Enduro	400	2005	2009	-	**100609211**	
Rr 400 Enduro	400	2005	2009	-	**100609541**	Filtro secondario | *Secondary filter*
Rr 450 Enduro	450	2005	2009	-	**100609211**	
Rr 450 Enduro	450	2005	2009	-	**100609541**	Filtro secondario | *Secondary filter*
Rr 450 Enduro Racing	450	2005	2009	-	**100609211**	
Rr 450 Enduro Racing	450	2005	2009	-	**100609541**	Filtro secondario | *Secondary filter*
Rr 525 Enduro	525	2005	2009	-	**100609211**	
Rr 525 Enduro	525	2005	2009	-	**100609541**	Filtro secondario | *Secondary filter*
Rr 525 Enduro Racing	525	2005	2009	-	**100609211**	
Rr 525 Enduro Racing	525	2005	2009	-	**100609541**	Filtro secondario | *Secondary filter*
BMW						
C1 125	125	2000	2004	11417651414	**100609021**	
C1 125 Abs	125	2001	2004	11417651414	**100609021**	
C1 200	200	2002	2004	11417651414	**100609021**	
C1 200 Abs	200	2002	2004	11417651414	**100609021**	
G 450 X	450	2008	2011	11427715456	**100609781**	
R 45 N	450	1978	1985	1421337572	**100609171**	
R 45 S	450	1978	1985	1421337572	**100609171**	
R 50 /5	500	1969	1973	1421337572	**100609171**	
C 600 Sport Abs	600	2012	2015	11427673541	**100609551**	
C 600 Sport Edition Abs	600	2014	2015	11427673541	**100609551**	
R 60 /5	600	1969	1973	1421337572	**100609171**	
R 60 /6	600	1973	1976	1421337572	**100609171**	
R 60 /7	600	1976	1980	1421337572	**100609171**	

Modello *Model*	CC	Da *From*	A *To*	OEM	Codice RMS *RMS Code*	Note *Notes*
C 650 Gt Abs	650	2012	2017	11427673541	**100609551**	
C 650 Gt Edition Abs	650	2014	2015	11427673541	**100609551**	
C 650 Sport Abs	650	2016	2017	11427673541	**100609551**	
R 65 1Serie	650	1978	1980	1421337572	**100609171**	
R 65 2Serie	650	1980	1985	1421337572	**100609171**	
R 65 3Serie Monolever	650	1985	1993	1421337572	**100609171**	
R 65 G/S	650	1987	1992	1421337572	**100609171**	
R 65 Ls	650	1981	1985	1421337572	**100609171**	
R 75 /5	750	1969	1973	1421337572	**100609171**	
R 75 /6	750	1973	1976	1421337572	**100609171**	
R 75 /7	750	1976	1979	1421337572	**100609171**	
F 650 800 GS	800	2008	2012	11427719357	**100609691**	
F 650 800 GS ABS	800	2008	2012	11427719357	**100609691**	
F 700 800 GS ABS	800	2013	2016	11427719357	**100609691**	
F 700 800 GS ABS	800	2017	2017	11427719357	**100609691**	
F 700 800 GS ABS ESA	800	2017	2017	11427719357	**100609691**	
F 800 800 GS	800	2008	2012	11427719357	**100609691**	
F 800 800 GS ABS	800	2008	2016	11427719357	**100609691**	
F 800 800 GS ABS ESA	800	2017	2017	11427719357	**100609691**	
F 800 800 GS Adventure ABS	800	2013	2018	11427719357	**100609691**	
F 800 800 GS Adventure ABS ESA	800	2017	2018	11427719357	**100609691**	
F 800 800 GT ABS	800	2013	2016	11427719357	**100609691**	
F 800 800 GT ABS	800	2017	2018	11427719357	**100609691**	
F 800 800 GT ABS ESA	800	2017	2018	11427719357	**100609691**	
F 800 800 R	800	2009	2012	11427719357	**100609691**	
F 800 800 R ABS	800	2009	2014	11427719357	**100609691**	
F 800 800 R ABS	800	2015	2018	11427719357	**100609691**	
F 800 800 R ABS ESA	800	2017	2018	11427719357	**100609691**	
R 80 /7N	800	1977	1980	1421337572	**100609171**	
R 80 /7S	800	1977	1980	1421337572	**100609171**	
R 80 G/S Monolever	800	1980	1987	1421337572	**100609171**	
R 80 Gs Paralever	800	1987	1990	1421337572	**100609171**	
R 80 Gs Pd Paris Dakar Paralever	800	1990	1993	1421337572	**100609171**	
R 80 Gs/2	800	1990	1990	1421337572	**100609171**	
R 80 Gs/2 Paralever	800	1990	1995	1421337572	**100609171**	
R 80 Gs/2 Paralever Last Edition	800	1996	1998	1421337572	**100609171**	
R 80 Monolever	800	1984	1993	1421337572	**100609171**	
R 80 R	800	1991	1994	1421337572	**100609171**	
R 80 Rt	800	1982	1984	1421337572	**100609171**	
R 80 Rt/2 Monolever	800	1984	1995	1421337572	**100609171**	
R 80 St	800	1982	1985	1421337572	**100609171**	
F 750 850 GS ABS	850	2018	2018	11427719357	**100609691**	
F 750 850 GS DTC ABS	850	2018	2018	11427719357	**100609691**	
F 750 850 GS ESA ABS	850	2018	2018	11427719357	**100609691**	
F 850 850 GS ABS	850	2018	2018	11427719357	**100609691**	
F 850 850 GS DTC ABS	850	2018	2018	11427719357	**100609691**	
R 90 /6	900	1973	1976	1421337572	**100609171**	
R 90 S	900	1973	1976	1421337572	**100609171**	
HP4 1000 ABS	1000	2012	2012	11427719357	**100609691**	
HP4 1000 ABS	1000	2013	2013	11427719357	**100609691**	
HP4 1000 ABS	1000	2014	2016	11427719357	**100609691**	
HP4 1000 Competition ABS	1000	2013	2013	11427719357	**100609691**	
HP4 1000 Competition ABS	1000	2014	2016	11427719357	**100609691**	
R 100 /7	1000	1976	1978	1421337572	**100609171**	
R 100 Cast Wheel	1000	1981	1984	1421337572	**100609171**	
R 100 Cs Clsport	1000	1980	1984	1421337572	**100609171**	
R 100 Gs	1000	1986	1990	1421337572	**100609171**	
R 100 Gs Pd Paris Dakar	1000	1989	1993	1421337572	**100609171**	

Modello *Model*	CC	Da *From*	A *To*	OEM	Codice RMS *RMS Code*	Note *Notes*
R 100 Gs Pd Paris Dakar Cl Edition	1000	1994	1996	1421337572	**100609171**	
R 100 Gs/2	1000	1990	1994	1421337572	**100609171**	
R 100 R Mystic	1000	1993	1996	1421337572	**100609171**	
R 100 R Roadster	1000	1991	1993	1421337572	**100609171**	
R 100 R Roadster Classic	1000	1994	1996	1421337572	**100609171**	
R 100 Rs	1000	1976	1984	1421337572	**100609171**	
R 100 Rs/2 Monolever	1000	1986	1992	1421337572	**100609171**	
R 100 Rt	1000	1978	1984	1421337572	**100609171**	
R 100 Rt/2 Classic Monolever	1000	1994	1996	1421337572	**100609171**	
R 100 Rt/2 Monolever	1000	1987	1993	1421337572	**100609171**	
R 100 S	1000	1976	1980	1421337572	**100609171**	
R 100 Spoked Wheel	1000	1981	1984	1421337572	**100609171**	
R 100 T Touren	1000	1977	1980	1421337572	**100609171**	
S 1000 R ABS	1000	2013	2018	11427719357	**100609691**	
S 1000 R ABS DTC	1000	2017	2018	11427719357	**100609691**	
S 1000 RR	1000	2009	2012	11427719357	**100609691**	
S 1000 RR ABS	1000	2009	2018	11427719357	**100609691**	
S 1000 RR ABS Pro	1000	2017	2018	11427719357	**100609691**	
S 1000 XR ABS	1000	2015	2018	11427719357	**100609691**	
S 1000 XR ABS DTC	1000	2017	2018	11427719357	**100609691**	
S 1000 XR ABS ESA	1000	2017	2018	11427719357	**100609691**	
K 1200 GT ABS	1200	2004	2008	11427719357	**100609691**	
K 1200 R 55 inch rim	1200	2005	2018	11427719357	**100609691**	
K 1200 R 55 inch rim ABS	1200	2005	2008	11427719357	**100609691**	
K 1200 R 60 inch rim	1200	2005	2008	11427719357	**100609691**	
K 1200 R 60 inch rim ABS	1200	2005	2008	11427719357	**100609691**	
K 1200 R Sport 55 inch rim	1200	2007	2008	11427719357	**100609691**	
K 1200 R Sport 55 inch rim ABS	1200	2007	2008	11427719357	**100609691**	
K 1200 R Sport 60 inch rim	1200	2007	2008	11427719357	**100609691**	
K 1200 R Sport 60 inch rim ABS	1200	2007	2008	11427719357	**100609691**	
K 1200 S ABS	1200	2005	2008	11427719357	**100609691**	
R 1200 Gs Adventure	1200	2006	2012	11427673541	**100609551**	
R 1200 Gs Adventure 90 Jahre Abs	1200	2013	2013	11427673541	**100609551**	
R 1200 Gs Adventure Abs	1200	2006	2013	11427673541	**100609551**	
R 1200 Gs Adventure Abs Triple Black	1200	2013	2013	11427673541	**100609551**	
R 1200 Gs Cast Wheel	1200	2004	2012	11427673541	**100609551**	
R 1200 Gs Cast Wheel Abs	1200	2004	2012	11427673541	**100609551**	
R 1200 GS LC Adventure ABS	1200	2014	2018	11427719357	**100609691**	
R 1200 GS LC Adventure ABS DTC	1200	2017	2018	11427719357	**100609691**	
R 1200 GS LC Adventure ABS ESA	1200	2017	2018	11427719357	**100609691**	
R 1200 GS LC Adventure Triple Black ABS	1200	2017	2017	11427719357	**100609691**	
R 1200 GS LC Adventure Triple Black ABS ESA	1200	2017	2017	11427719357	**100609691**	
R 1200 GS LC Exclusive ABS	1200	2017	2018	11427719357	**100609691**	
R 1200 GS LC Exclusive DTC ABS	1200	2017	2018	11427719357	**100609691**	
R 1200 GS LC Exclusive ESA ABS	1200	2017	2018	11427719357	**100609691**	
R 1200 GS LC Gussrad ABS	1200	2013	2016	11427719357	**100609691**	
R 1200 GS LC Gussrad ABS	1200	2017	2018	11427719357	**100609691**	
R 1200 GS LC Gussrad DTC ABS	1200	2017	2018	11427719357	**100609691**	
R 1200 GS LC Gussrad ESA ABS	1200	2017	2018	11427719357	**100609691**	
R 1200 GS LC Rally ABS	1200	2017	2018	11427719357	**100609691**	
R 1200 GS LC Rally DTC ABS	1200	2017	2018	11427719357	**100609691**	
R 1200 GS LC Rally ESA ABS	1200	2017	2018	11427719357	**100609691**	
R 1200 GS LC Speichenrad ABS	1200	2013	2016	11427719357	**100609691**	
R 1200 GS LC Triple Black ABS	1200	2016	2016	11427719357	**100609691**	
R 1200 Gs Spoked Wheel	1200	2004	2012	11427673541	**100609551**	
R 1200 Gs Spoked Wheel Abs	1200	2004	2012	11427673541	**100609551**	
R 1200 Hp2 Enduro Abs	1200	2005	2008	11427673541	**100609551**	
R 1200 Hp2 Megamoto Abs	1200	2007	2011	11427673541	**100609551**	

Modello *Model*	CC	Da *From*	A *To*	OEM	Codice RMS *RMS Code*	Note *Notes*
R 1200 Hp2 Sport	1200	2008	2011	11427673541	**100609551**	
R 1200 Hp2 Sport Abs	1200	2008	2011	11427673541	**100609551**	
R 1200 Ninet Abs	1200	2013	2017	11427673541	**100609551**	
R 1200 Ninet Scrambler Abs	1200	2016	2016	11427673541	**100609551**	
R 1200 Ninet Scrambler Gussrad Abs	1200	2017	2017	11427673541	**100609551**	
R 1200 Ninet Scrambler Speichenrad Abs	1200	2017	2017	11427673541	**100609551**	
R 1200 R	1200	2007	2012	11427673541	**100609551**	
R 1200 R 90 Jahre Abs	1200	2013	2013	11427673541	**100609551**	
R 1200 R Abs	1200	2007	2014	11427673541	**100609551**	
R 1200 R Classic Abs	1200	2013	2014	11427673541	**100609551**	
R 1200 R LC ABS	1200	2014	2018	11427719357	**100609691**	
R 1200 R LC ABS DTC	1200	2017	2018	11427719357	**100609691**	
R 1200 R LC ABS ESA	1200	2014	2018	11427719357	**100609691**	
R 1200 RS LC ABS	1200	2015	2017	11427719357	**100609691**	
R 1200 RS LC ABS DTC	1200	2017	2018	11427719357	**100609691**	
R 1200 RS LC ABS ESA	1200	2015	2018	11427719357	**100609691**	
R 1200 Rt 90 Jahre Abs	1200	2013	2014	11427673541	**100609551**	
R 1200 Rt Abs	1200	2005	2013	11427673541	**100609551**	
R 1200 RT LC ABS	1200	2013	2018	11427719357	**100609691**	
R 1200 RT LC ABS DTC	1200	2017	2018	11427719357	**100609691**	
R 1200 RT LC ABS DTC	1200	2018	2018	11427719357	**100609691**	
R 1200 RT LC ABS ESA	1200	2017	2018	11427719357	**100609691**	
R 1200 S 55 Inch Rim	1200	2006	2008	11427673541	**100609551**	
R 1200 S 55 Inch Rim Abs	1200	2006	2008	11427673541	**100609551**	
R 1200 S 60 Inch Rim	1200	2006	2008	11427673541	**100609551**	
R 1200 S 60 Inch Rim Abs	1200	2006	2008	11427673541	**100609551**	
R 1200 St	1200	2005	2008	11427673541	**100609551**	
R 1200 St Abs	1200	2005	2008	11427673541	**100609551**	
K 1300 GT ABS	1300	2009	2009	11427719357	**100609691**	
K 1300 GT Exclusive Edition ABS	1300	2010	2011	11427719357	**100609691**	
K 1300 R 55 inch rim	1300	2009	2012	11427719357	**100609691**	
K 1300 R 55 inch rim ABS	1300	2009	2015	11427719357	**100609691**	
K 1300 R 60 inch rim	1300	2009	2012	11427719357	**100609691**	
K 1300 R 60 inch rim ABS	1300	2009	2015	11427719357	**100609691**	
K 1300 S ABS	1300	2009	2015	11427719357	**100609691**	
K 1300 S Motorsport ABS	1300	2014	2015	11427719357	**100609691**	
K 1600 B Bagger Abs	1600	2017	2017	11427673541	**100609551**	
K 1600 Gt Abs	1600	2011	2017	11427673541	**100609551**	
K 1600 Gt Sport Abs	1600	2013	2016	11427673541	**100609551**	
K 1600 Gtl Abs	1600	2011	2017	11427673541	**100609551**	
K 1600 Gtl Exclusive Abs	1600	2014	2016	11427673541	**100609551**	
BUELL						
Xb9R 1000 Ie Firebolt	1000	2002	2004	6380600Y	**100609741**	
Xb9S 1000 Ie Lightning	1000	2003	2004	6380600Y	**100609741**	
Xb9Sx 1000 Ie Lightning Cityx	1000	2005	2010	6380600Y	**100609741**	
M2 1200 Cyclone	1200	1997	2002	-	**100609561**	
S1 1200 Lightning	1200	1996	1999	-	**100609561**	
S1 1200 White Lightning	1200	1998	1999	-	**100609561**	
S3 1200 Ie Thunderbolt	1200	1999	1999	-	**100609561**	
S3 1200 Thunderbolt	1200	1997	1998	-	**100609561**	
S3T 1200 Ie Thunderbolt	1200	1999	1999	-	**100609561**	
S3T 1200 Thunderbolt	1200	1997	1998	-	**100609561**	
X1 1200 Ie Lightning 5,0 Inch Rim	1200	1999	2002	-	**100609561**	
Xb12R 1200 Ie Firebolt	1200	2004	2007	6380600Y	**100609741**	
Xb12S 1200 Ie Lightning	1200	2004	2008	6380600Y	**100609741**	
Xb12Scg 1200 Ie Lightning Short	1200	2007	2010	6380600Y	**100609741**	
Xb12Ss 1200 Ie Lightning Long	1200	2006	2010	6380600Y	**100609741**	
Xb12Stt 1200 Ie Lightning Super Tt	1200	2007	2008	6380600Y	**100609741**	

Modello *Model*	CC	Da *From*	A *To*	OEM	Codice RMS *RMS Code*	Note *Notes*
Xb12Sx 1200 Ie Lightning Cityx	1200	2010	2010	6380600Y	**100609741**	
Xb12X 1200 Ie Ulysses	1200	2006	2010	6380600Y	**100609741**	
Xb12Xt 1200 Ie Ulysses	1200	2009	2010	6380600Y	**100609741**	
CAGIVA						
Raptor - V Raptor	650	2001	2005	800096226	**100609511**	
Raptor Ie	650	2006	2006	8000A6527	**100609511**	
Navigator	1000	2000	2005	800096226	**100609511**	
Raptor - V Raptor - X-Tra Raptor	1000	2000	2005	800096226	**100609511**	
DAELIM						
Vc 125 Advance	125	1996	1996	15412KN69612	**100609470**	
Vc 125 Advance 80 Km/H	125	1996	1996	15412KN69612	**100609470**	
Vs 125	125	1997	1999	15412KN69612	**100609470**	
Vs 125 Evolution	125	2000	2003	15412KN69612	**100609470**	
Vt 125	125	1998	2000	15412KN69612	**100609470**	
Vt 125 80 Km/H	125	1998	2000	15412KN69612	**100609470**	
Vt 125 Evolution	125	2000	2002	15412KN69612	**100609470**	
Vt 125 Evolution 80 Km/H	125	1999	2002	15412KN69612	**100609470**	
DERBI						
Boulevard 125-150	125	2003	2004	82635R	**100609041**	
Boulevard 125-150 Eu2	125	2004	2007	82635R	**100609041**	
Boulevard 4T Eu3	125	2008	2012	82635R	**100609041**	
Gp1 Eu2	125	2006	2006	82635R	**100609041**	
Gp1 Low Seat 125 Eu3	125	2007	2008	82635R	**100609041**	
Rambla 125-250	125	2008	2009	82635R	**100609041**	
Rambla 125-250 E3 2Ver	125	2008	2008	82635R	**100609041**	
Sonar 4T	125	2009	2011	82635R	**100609041**	
Variant Sport 4T E3	125	2012	2012	82635R	**100609041**	
Boulevard 125-150	150	2003	2004	82635R	**100609041**	
Boulevard 125-150 Eu2	150	2004	2007	82635R	**100609041**	
Boulevard 4T E3	150	2010	2010	82635R	**100609041**	
Sonar 4T	150	2009	2009	82635R	**100609041**	
Boulevard Eu2	200	2005	2006	82635R	**100609041**	
Gp1	250	2006	2007	82635R	**100609041**	
Gp1 Low Seat 250 Eu3	250	2007	2008	82635R	**100609041**	
Rambla 125-250	250	2008	2009	82635R	**100609041**	
Rambla 125-250 E3 2Ver	250	2008	2008	82635R	**100609041**	
Rambla	300	2010	2011	82635R	**100609041**	
Mulhacen Eu2 - Cafe' Eu3 - Nieto Eu3	660	2006	2008	862371	**100609290**	
DUCATI						
Monster 400	400	1995	2008	42540101A	**100609101**	
Monster 400 Dark	400	2005	2005	67090081A	**100609101**	
Supersport 400 Ss	400	1993	1997	090549960	**100609101**	
Monster 600	600	1993	2001	090549960	**100609101**	
Monster 600 City	600	1999	1999	42510021A	**100609101**	
Monster 600 Dark	600	1998	1998	090549960	**100609101**	
Monster 600 Dark City	600	1999	1999	42510021A	**100609101**	
Supersport 600 Ss	600	1991	1997	090549960	**100609101**	
Monster 620	620	2002	2006	42540101A	**100609101**	
Monster 620 Dark	620	2005	2006	42540101A	**100609101**	
Monster 620 Dark Single Disc	620	2005	2005	42610111A	**100609101**	
Multistrada 620	620	2006	2006	42540101A	**100609101**	
Multistrada 620 Dark	620	2006	2006	42540101A	**100609101**	
Supersport 620 S	620	2003	2003	42540041B	**100609101**	
Monster 695	695	2007	2008	42540101A	**100609101**	
Monster 696	696	2013	2013	67040351A	**100609101**	
Monster 696 Abs Anniversary	696	2013	2013	67040351A	**100609101**	
Monster 696 Anniversary	696	2013	2013	67040351A	**100609101**	
Monster 696	700	2008	2012	67040351A	**100609101**	

Modello *Model*	CC	Da *From*	A *To*	OEM	Codice RMS *RMS Code*	Note *Notes*
Monster 696 Abs	700	2010	2014	67040351A	**100609101**	
Superbike 748	748	1995	2001	42540041B	**100609101**	
Superbike 748 E	748	2001	2002	42540041B	**100609101**	
Superbike 748 R	748	1999	1999	42540041B	**100609101**	
Superbike 748 R Single-Seat	748	1998	2002	42540041B	**100609101**	
Superbike 748 Rs	748	2000	2001	42540041B	**100609101**	
Superbike 748 S	748	2000	2002	42540041B	**100609101**	
Superbike 748 Sps	748	1998	1999	42540041B	**100609101**	
Superbike 749	748	2003	2003	42540101A	**100609101**	
Superbike 749 Dark	748	2004	2006	42540101A	**100609101**	
Superbike 749 R	748	2004	2006	42540101A	**100609101**	
Superbike 749 S	748	2003	2006	42540101A	**100609101**	
Monster 750	750	1996	2002	42610111A	**100609101**	
Monster 750 City	750	1999	1999	42510021A	**100609101**	
Monster 750 Dark	750	1999	1999	42510021A	**100609101**	
Monster 750 Dark City	750	1999	1999	42510021A	**100609101**	
Supersport 750 S	750	2001	2002	67090081A	**100609101**	
Supersport 750 Ss	750	1991	2002	67090081A	**100609101**	
Monster 795 Abs Corse Stripe	795	2014	2015	67040351A	**100609101**	
Monster 795 Abs Red Stripe C	795	2015	2015	67040351A	**100609101**	
Monster 796 Abs	796	2013	2013	67040351A	**100609101**	
Monster 796 Abs Anniversary	796	2013	2013	67040351A	**100609101**	
Monster 796 Anniversary	796	2013	2013	67040351A	**100609101**	
Hypermotard 796	800	2010	2012	44440035A	**100609101**	
Monster 796	800	2011	2013	67040351A	**100609101**	
Monster 796 Abs	800	2011	2014	67040351A	**100609101**	
Monster 797	800	2017	2017	67040351A	**100609101**	
Monster 800	800	2003	2004	42610111A	**100609101**	
Monster S2R 800	800	2005	2007	42540101A	**100609101**	
Monster S2R 800 Dark	800	2005	2006	42540101A	**100609101**	
Scrambler Classic	800	2015	2017	67040351A	**100609101**	
Scrambler Desert Sled	800	2017	2017	67040351A	**100609101**	
Scrambler Flat Track Pro	800	2016	2016	67040351A	**100609101**	
Scrambler Full Throttle	800	2015	2017	67040351A	**100609101**	
Scrambler Icon	800	2015	2017	67040351A	**100609101**	
Scrambler Italia Independent	800	2016	2016	67040351A	**100609101**	
Scrambler Italia Independent U	800	2016	2016	67040351A	**100609101**	
Scrambler Urban Enduro	800	2015	2016	67040351A	**100609101**	
Supersport 800 S	800	2003	2003	67090071A	**100609101**	
Supersport 800 Ss	800	2003	2005	67090071A	**100609101**	
Superbike 848	850	2008	2010	42540041B	**100609101**	
Superbike 851	851	1991	1992	42610091A	**100609101**	
Superbike 888	888	1994	1995	42610091A	**100609101**	
Superbike 888 Sp5	888	1993	1993	42610091A	**100609101**	
Superbike 888 Us	888	1994	1995	42610091A	**100609101**	
Monster 900	900	1993	2002	67090081A	**100609101**	
Monster 900 City	900	1999	1999	42510021A	**100609101**	
Monster 900 Cromo	900	1998	1998	090549960	**100609101**	
Monster 900 Dark City	900	1999	1999	42510021A	**100609101**	
Monster 900 S	900	1998	1998	090549960	**100609101**	
Sportclassic Mh900E	900	2001	2002	42540041B	**100609101**	
Superbike 907 I.E.	900	1990	1993	42540041B	**100609101**	
Supersport 900 S	900	2002	2002	67090081A	**100609101**	
Supersport 900 Ss	900	1991	2002	67090081A	**100609101**	
Supersport 900 Ss Final Ed.	900	1998	1998	090549960	**100609101**	
Monster S4	916	2001	2002	42540041B	**100609101**	
Monster S4 Fogarty	916	2002	2002	42540041B	**100609101**	
Sport Touring St4	916	1999	2003	42540041B	**100609101**	

Modello *Model*	CC	Da *From*	A *To*	OEM	Codice RMS *RMS Code*	Note *Notes*
Superbike 916	916	1994	1997	090549960	**100609101**	
Superbike 916 Senna	916	1994	1998	090549960	**100609101**	
Superbike 916 Sp	916	1994	1996	42540041B	**100609101**	
Sport Touring St2	944	1997	2003	42540041B	**100609101**	
Monster S4R	996	2003	2006	42610111A	**100609101**	
Monster S4R Usa	996	2005	2006	42610111A	**100609101**	
Sport Touring St4 S	996	2001	2005	42540041B	**100609101**	
Sport Touring St4 S Abs	996	2003	2005	42610091A	**100609101**	
Superbike 916 R	996	1997	1998	090549960	**100609101**	
Superbike 916 Sps	996	1997	1998	090549960	**100609101**	
Superbike 996	996	1999	2001	42540041B	**100609101**	
Superbike 996 R	996	1999	2001	42540041B	**100609101**	
Superbike 996 R Ii	996	2001	2001	42540041B	**100609101**	
Superbike 996 S	996	2001	2001	42540041B	**100609101**	
Superbike 996 Sps	996	1999	2000	42540041B	**100609101**	
Superbike 996 Sps Ii	996	1999	1999	42540041B	**100609101**	
Superbike 996 Sps Iii	996	2000	2000	42540041B	**100609101**	
Superbike 998	998	2002	2003	42540041B	**100609101**	
Superbike 998 Final Ed.	998	2004	2004	42540041B	**100609101**	
Superbike 998 Matrix	998	2004	2004	42540041B	**100609101**	
Superbike 998 Matrix Single-Se	998	2004	2004	42540041B	**100609101**	
Superbike 998 R	998	2002	2002	42540041B	**100609101**	
Superbike 998 S Bayliss	998	2002	2002	42540041B	**100609101**	
Superbike 998 S Bostrom	998	2002	2002	42540041B	**100609101**	
Superbike 999	998	2003	2006	42540101A	**100609101**	
Superbike 999 R	998	2003	2006	42540101A	**100609101**	
Superbike 999 R Xerox	998	2006	2006	42540101A	**100609101**	
Superbike 999 S	998	2003	2006	42540101A	**100609101**	
Superbike 999 S Ama Replica	998	2007	2007	42540101A	**100609101**	
Desmosedici Rr	1000	2008	2008	42540041B	**100609101**	
Monster 1000	1000	2003	2005	42610111A	**100609101**	
Monster 1000 S	1000	2005	2005	42610111A	**100609101**	
Monster S2R 1000	1000	2006	2008	42540101A	**100609101**	
Monster S4R	1000	2007	2008	44440034A	**100609101**	
Monster S4Rs	1000	2006	2008	44440034A	**100609101**	
Monster S4Rs Tricolore	1000	2008	2008	44440034A	**100609101**	
Multistrada 1000	1000	2003	2006	42540101A	**100609101**	
Multistrada 1000 S	1000	2005	2006	42540101A	**100609101**	
Sport Touring St3	1000	2004	2007	42610091A	**100609101**	
Sportclassic Gt1000	1000	2007	2010	73740211A	**100609101**	
Sportclassic Gt1000 Touring	1000	2009	2009	73740211A	**100609101**	
Sportclassic Paul Smart	1000	2006	2006	73740211A	**100609101**	
Sportclassic Sport 1000	1000	2007	2008	73740211A	**100609101**	
Sportclassic Sport 1000 S	1000	2007	2009	73740211A	**100609101**	
Sportclassic Sport 1000 Single-Se	1000	2006	2007	42540041B	**100609101**	
Supersport 1000 Ss	1000	2003	2006	73740211A	**100609101**	
Supersport 1000 Ss Usa	1000	2005	2006	73740211A	**100609101**	
Hypermotard 1100	1100	2008	2009	73740211A	**100609101**	
Hypermotard 1100 Evo	1100	2010	2012	73740211A	**100609101**	
Hypermotard 1100 Evo Sp	1100	2010	2012	73740211A	**100609101**	
Hypermotard 1100 S	1100	2008	2009	73740211A	**100609101**	
Monster 1100	1100	2009	2010	73740211A	**100609101**	
Monster 1100 Abs	1100	2010	2010	73740211A	**100609101**	
Monster 1100 Diesel Eur	1100	2013	2013	73740211A	**100609101**	
Monster 1100 Evo Abs	1100	2012	2013	73740211A	**100609101**	
Monster 1100 Evo Anniversary	1100	2013	2013	73740211A	**100609101**	
Monster 1100 S	1100	2009	2010	73740211A	**100609101**	
Monster 1100 S Abs	1100	2010	2010	73740211A	**100609101**	

Modello *Model*	CC	Da *From*	A *To*	OEM	Codice RMS *RMS Code*	Note *Notes*
Multistrada 1100	1100	2007	2009	42540101A	**100609101**	
Multistrada 1100 S	1100	2007	2009	42540101A	**100609101**	
Streetfighter	1100	2010	2011	42540041B	**100609101**	
Streetfighter S	1100	2010	2012	42540041B	**100609101**	
Superbike 1098	1100	2007	2008	42540041B	**100609101**	
Superbike 1098 S	1100	2007	2008	42540041B	**100609101**	
Superbike 1098 S Tricolore	1100	2007	2008	42540041B	**100609101**	
Superbike 1098 R	1200	2008	2009	42540041B	**100609101**	
Superbike 1098 R Bayliss	1200	2009	2009	42540041B	**100609101**	
Superbike 1198	1200	2009	2010	42540041B	**100609101**	
Superbike 1198 R	1200	2010	2010	42540041B	**100609101**	
Superbike 1198 S	1200	2009	2010	42540041B	**100609101**	
Superbike 1198 S Corse	1200	2010	2010	42540041B	**100609101**	
GAS GAS						
Fse 400-450	400	2006	2007	MFS450622565CT	**100609191**	
Fsr Ec/Sm	450	2008	2008	MFS450622565CT	**100609191**	
Pampera	450	2007	2008	MFS450622565CT	**100609191**	
Wild Hp	450	2007	2007	MFS450622565CT	**100609191**	
GILERA						
Nexus Euro3	125	2007	2008	82635R	**100609041**	
Nexus Euro3 Ie	125	2008	2010	82635R	**100609041**	
Runner 4T St Euro3	125	2008	2016	82635R	**100609041**	
Runner Vx	125	2005	2006	82635R	**100609041**	
Runner Vx 4T Euro3	125	2006	2007	82635R	**100609041**	
Runner Vx Race	125	2006	2006	82635R	**100609041**	
Runner Vx Sc	125	2006	2007	82635R	**100609041**	
Runner Vx-Vxr 125-180	125	2000	2001	82635R	**100609041**	
Runner Vx-Vxr 125-200	125	2002	2004	82635R	**100609041**	
Runner Vx-Vxr 125-180	180	2000	2001	82635R	**100609041**	
Runner Vxr	200	2005	2006	82635R	**100609041**	
Runner Vxr 4T St Euro3	200	2008	2011	82635R	**100609041**	
Runner Vxr Euro3	200	2007	2007	82635R	**100609041**	
Runner Vxr Race	200	2005	2006	82635R	**100609041**	
Runner Vx-Vxr 125-200	200	2002	2004	82635R	**100609041**	
Nexus Euro3	250	2006	2007	82635R	**100609041**	
Nexus Sp Euro3	250	2006	2007	82635R	**100609041**	
Oregon	250	2006	2010	82635R	**100609041**	
Nexus Euro3	300	2008	2011	82635R	**100609041**	
Fuoco 4T-4V Ie E3 Lt	500	2013	2014	82960R	**100609071**	
Fuoco Euro3	500	2007	2013	82960R	**100609071**	
Nexus Euro3	500	2006	2011	82960R	**100609071**	
Nexus Sp Euro3	500	2006	2007	82960R	**100609071**	
Gp	800	2007	2011	82960R	**100609071**	
Gp Centenario	800	2009	2009	82960R	**100609071**	
HARLEY DAVIDSON						
Xlch 1000 Sportster	1000	1980	1985	6378280	**100609721**	
Xlh 1000 Sportster	1000	1980	1985	6378280	**100609721**	
Xls 1000 Roadster	1000	1980	1985	6378280	**100609721**	
Xlx-61 1000 Sportster	1000	1983	1985	6378280	**100609721**	
Vrsca 1130 V-Rod	1130	2002	2006	6379301K	**100609731**	
Vrscaw 1130 V-Rod	1130	2007	2007	6379301K	**100609731**	
Vrscb 1130 V-Rod	1130	2004	2005	6379301K	**100609731**	
Vrscd 1130 Night Rod	1130	2006	2007	6379301K	**100609731**	
Vrscdx 1130 Night Rod Special	1130	2007	2007	6379301K	**100609731**	
Vrscr 1130 Street-Rod	1130	2006	2007	6379301K	**100609731**	
Vrscaw 1250 V-Rod	1250	2008	2008	6379301K	**100609731**	
Vrscaw 1250 V-Rod Abs	1250	2009	2010	6379301K	**100609731**	
Vrscawa 1250 V-Rod Abs	1250	2008	2008	6379301K	**100609731**	

Modello *Model*	CC	Da *From*	A *To*	OEM	Codice RMS *RMS Code*	Note *Notes*
Vrscdx 1250 Night Rod Special	1250	2008	2008	6379301K	**100609731**	
Vrscdx 1250 Night Rod Special Abs	1250	2009	2017	6379301K	**100609731**	
Vrscdxa 1250 Night Rod Special Abs	1250	2008	2008	6379301K	**100609731**	
Vrscdx-Anv 1250 V-Rod Anniversary Abs	1250	2012	2012	6379301K	**100609731**	
Vrscf 1250 V-Rod Muscle Abs	1250	2009	2017	6379301K	**100609731**	
Vrscse 1250 V-Rod Screamin Eagle	1250	2005	2005	6379301K	**100609731**	
Vrscse2 1250 V-Rod Screamin Eagle	1250	2006	2006	6379301K	**100609731**	
Vrscx 1250 V-Rod Screamin Eagle	1250	2007	2007	6379301K	**100609731**	
Flstc 1340 Heritage Softail Classic	1340	1999	1999	6373199	**100609561**	
Flstf 1340 Fat Boy	1340	1999	1999	6373199	**100609561**	
Flsts 1340 Heritage Softail Springer	1340	1999	1999	6373199	**100609561**	
Fxe 1340 Super Glide	1340	1982	1984	6378280	**100609721**	
Fxef 1340 Fat Bob	1340	1985	1985	6378280	**100609721**	
Fxs 1340 Low Rider	1340	1982	1984	6378280	**100609721**	
Fxsb 1340 Low Rider	1340	1982	1985	6378280	**100609721**	
Fxst 1340 Softail Standard	1340	1999	1999	6373199	**100609561**	
Fxstb 1340 Night Train	1340	1998	1999	6373199	**100609561**	
Fxsts 1340 Softail Springer	1340	1999	1999	6373199	**100609561**	
Fxwg 1340 Wide Glide	1340	1983	1985	6378280	**100609721**	
Flhr 1450 Electra Glide Road King	1450	1999	2001	6373199	**100609561**	
Flhr 1450 Road King	1450	2002	2003	6373199	**100609561**	
Flhrci 1450 Efi Electra Glide Road King C	1450	1999	2001	6373199	**100609561**	
Flhrci 1450 Efi Road King Classic	1450	2002	2006	6373199	**100609561**	
Flhri 1450 Efi Road King	1450	2004	2006	6373199	**100609561**	
Flhrsi 1450 Efi Road King Custom	1450	2004	2006	6373199	**100609561**	
Flht 1450 Electra Glide Standard	1450	1999	2003	6373199	**100609561**	
Flhtc 1450 Electra Glide Classic	1450	2002	2003	6373199	**100609561**	
Flhtci 1450 Efi Electra Glide Classic	1450	2004	2004	6373199	**100609561**	
Flhtcui 1450 Efi Electra Glide Ultra Clas	1450	1999	2006	6373199	**100609561**	
Flhti 1450 Efi Electra Glide Standard	1450	2004	2006	6373199	**100609561**	
Flhxi 1450 Efi Street Glide	1450	2006	2007	6373199	**100609561**	
Flstbi 1450 Efi Night Train	1450	2005	2005	6373199	**100609561**	
Flstc 1450 Heritage Softail Classic	1450	2000	2003	6373199	**100609561**	
Flstci 1450 Efi Heritage Softail Classic	1450	2001	2006	6373199	**100609561**	
Flstf 1450 Fat Boy	1450	2000	2003	6373199	**100609561**	
Flstfi 1450 Efi Fat Boy	1450	2001	2006	6373199	**100609561**	
Flsti 1450 Efi Heritage Softail	1450	2006	2006	6373199	**100609561**	
Flstni 1450 Efi Softail Deluxe	1450	2005	2006	6373199	**100609561**	
Flsts 1450 Heritage Springer	1450	2000	2003	6373199	**100609561**	
Flstsci 1450 Efi Softail Springer Classic	1450	2005	2006	6373199	**100609561**	
Fltri 1450 Efi Electra Glide Road Glide	1450	1999	2001	6373199	**100609561**	
Fxd 1450 Dyna Super Glide	1450	1999	2003	6373199	**100609561**	
Fxdbi 1450 Efi Dyna Street Bob	1450	2006	2007	6373199	**100609561**	
Fxdci 1450 Efi Dyna Super Glide Custom	1450	2005	2006	6373199	**100609561**	
Fxdi 1450 Efi Dyna Super Glide	1450	2004	2005	6373199	**100609561**	
Fxdi 35Th 1450 Efi Super Glide Anniversay	1450	2006	2007	6373199	**100609561**	
Fxdl 1450 Dyna Low Rider	1450	1999	2003	6373199	**100609561**	
Fxdli 1450 Efi Dyna Low Rider	1450	2004	2006	6373199	**100609561**	
Fxdwg 1450 Dyna Wide Glide	1450	1999	2003	6373199	**100609561**	
Fxdwgi 1450 Efi Dyna Wide Glide	1450	2004	2006	6373199	**100609561**	
Fxdx 1450 Dyna Super Glide Sport	1450	1999	2003	6373199	**100609561**	
Fxdxi 1450 Efi Dyna Super Glide Sport	1450	2004	2005	6373199	**100609561**	
Fxdxt 1450 Dyna Super Glide Tour Sport	1450	2001	2003	6373199	**100609561**	
Fxst 1450 Softail Standard	1450	2000	2003	6373199	**100609561**	
Fxstb 1450 Night Train	1450	2000	2004	6373199	**100609561**	
Fxstbi 1450 Efi Night Train	1450	2004	2006	6373199	**100609561**	
Fxstbic 1450 Efi Night Creeper	1450	2006	2006	6373199	**100609561**	
Fxstd 1450 Softail Deuce	1450	2000	2003	6373199	**100609561**	

Modello *Model*	CC	Da *From*	A *To*	OEM	Codice RMS *RMS Code*	Note *Notes*
Fxstdi 1450 Efi Softail Deuce	1450	2001	2005	6373199	**100609561**	
Fxsti 1450 Efi Softail Standard	1450	2004	2006	6373199	**100609561**	
Fxsts 1450 Softail Springer	1450	2000	2003	6373199	**100609561**	
Fxstsi 1450 Efi Softail Springer	1450	2004	2004	6373199	**100609561**	
Flhr 1584 Road King	1584	2007	2008	6373199	**100609561**	
Flhr 1584 Road King Abs	1584	2008	2009	6373199	**100609561**	
Flhrc 1584 Road King Classic	1584	2007	2010	6373199	**100609561**	
Flhrc 1584 Road King Classic Abs	1584	2008	2011	6373199	**100609561**	
Flhrs 1584 Road King Custom	1584	2007	2007	6373199	**100609561**	
Flht 1584 Electra Glide Standard	1584	2007	2008	6373199	**100609561**	
Flht 1584 Electra Glide Standard Abs	1584	2008	2010	6373199	**100609561**	
Flhtcu 1584 Ultra Classic Electra Glide	1584	2007	2007	6373199	**100609561**	
Flhtcu 1584 Ultra Classic Electra Glide A	1584	2008	2010	6373199	**100609561**	
Flhx 1584 Street Glide	1584	2007	2010	6373199	**100609561**	
Flhx 1584 Street Glide Abs	1584	2008	2009	6373199	**100609561**	
Flstc 1584 Heritage Softail Classic	1584	2007	2010	6373199	**100609561**	
Flstc 1584 Heritage Softail Classic Abs	1584	2011	2011	6373199	**100609561**	
Flstf 1584 Softail Fat Boy	1584	2007	2010	6373199	**100609561**	
Flstf 1584 Softail Fat Boy Abs	1584	2011	2011	6373199	**100609561**	
Flstfb 1584 Softail Fat Boy Special	1584	2010	2010	6373199	**100609561**	
Flstfb 1584 Softail Fat Boy Special Abs	1584	2011	2011	6373199	**100609561**	
Flstn 1584 Softail Deluxe	1584	2007	2008	6373199	**100609561**	
Flstn 1584 Softail Deluxe Abs	1584	2011	2011	6373199	**100609561**	
Flstnr 1584 Reaper Softail Deluxe	1584	2010	2010	6373199	**100609561**	
Flstsb 1584 Softail Cross Bones	1584	2008	2011	6373199	**100609561**	
Flstsc 1584 Softail Springer Classic	1584	2007	2007	6373199	**100609561**	
Fxcw 1584 Softail Rocker	1584	2008	2009	6373199	**100609561**	
Fxcwc 1584 C Softail Rocker C	1584	2008	2010	6373199	**100609561**	
Fxcwc 1584 C Softail Rocker C Abs	1584	2011	2011	6373199	**100609561**	
Fxdb 1584 Dyna Street Bob	1584	2007	2013	6373199	**100609561**	
Fxdb 1584 Dyna Street Bob Abs	1584	2012	2013	6373199	**100609561**	
Fxdc 1584 Dyna Super Glide Custom	1584	2007	2011	6373199	**100609561**	
Fxdc 1584 Dyna Super Glide Custom Abs	1584	2012	2013	6373199	**100609561**	
Fxdc-Anv 1584 Dyna Super Glide Custom Abs	1584	2013	2013	6373199	**100609561**	
Fxdf 1584 Dyna Fat Bob	1584	2008	2011	6373199	**100609561**	
Fxdf 1584 Dyna Fat Bob Abs	1584	2012	2012	6373199	**100609561**	
Fxdl 1584 Dyna Low Rider	1584	2007	2008	6373199	**100609561**	
Fxdwg 1584 Dyna Wide Glide	1584	2007	2011	6373199	**100609561**	
Fxdwg 1584 Dyna Wide Glide Abs	1584	2012	2012	6373199	**100609561**	
Fxs 1584 Softail Blackline	1584	2011	2011	6373199	**100609561**	
Fxs 1584 Softail Blackline Abs	1584	2012	2012	6373199	**100609561**	
Fxstb 1584 Softail Night Train	1584	2007	2009	6373199	**100609561**	
Fxstbic 1584 Softail Night Creeper	1584	2007	2008	6373199	**100609561**	
Fxstc 1584 Softail Custom	1584	2007	2009	6373199	**100609561**	
Fld 1690 Dyna Switchback Abs	1690	2012	2016	6373199	**100609561**	
Flhr 1690 Road King Abs	1690	2016	2016	6373199	**100609561**	
Flhr-Anv 1690 Road King Classic Abs Anniv	1690	2013	2013	6373199	**100609561**	
Flhrc 1690 Road King Classic Abs	1690	2011	2016	6373199	**100609561**	
Flhtc 1690 Electra Glide Classic Abs	1690	2011	2012	6373199	**100609561**	
Flhtcu 1690 Electra Glide Ultra Classic A	1690	2012	2016	6373199	**100609561**	
Flhtcuse 1690 Efi Cvo Ultra Classic Elect	1690	2006	2006	6373199	**100609561**	
Flhtcutg 1690 Tri Glide Ultra	1690	2014	2016	6373199	**100609561**	
Flhtk 1690 Electra Glide Limited Abs	1690	2013	2015	6373199	**100609561**	
Flhtk 1690 Electra Glide Ultra Limited Ab	1690	2010	2012	6373199	**100609561**	
Flhtk-Anv 1690 Electra Glide Limited Anni	1690	2013	2013	6373199	**100609561**	
Flhtkl 1690 Electra Glide Limited Low Abs	1690	2015	2016	6373199	**100609561**	
Flhx 1690 Street Glide Abs	1690	2011	2014	6373199	**100609561**	
Flhxs 1690 Street Glide Special Abs	1690	2015	2016	6373199	**100609561**	

Modello *Model*	CC	Da *From*	A *To*	OEM	Codice RMS *RMS Code*	Note *Notes*
Fls 1690 Softail Slim Abs	1690	2012	2017	6373199	**100609561**	
Flstc 1690 Heritage Softail Classic	1690	2013	2015	6373199	**100609561**	
Flstc 1690 Heritage Softail Classic Abs	1690	2016	2017	6373199	**100609561**	
Flstc 1690 Heritage Softail Springer	1690	2012	2014	6373199	**100609561**	
Flstc-Anv 1690 Heritage Softail Classic A	1690	2013	2013	6373199	**100609561**	
Flstf 1690 Softail Fat Boy Abs	1690	2012	2017	6373199	**100609561**	
Flstfb 1690 Softail Fat Boy Special Abs	1690	2012	2017	6373199	**100609561**	
Flstfb-Anv 1690 Softail Fat Boy Special A	1690	2013	2013	6373199	**100609561**	
Flstfse 1690 Efi Cvo Fat Boy Screamin Eag	1690	2005	2005	6373199	**100609561**	
Flstfse2 1690 Efi Cvo Fat Boy Screamin Ea	1690	2006	2006	6373199	**100609561**	
Flstn 1690 Softail Deluxe Abs	1690	2012	2017	6373199	**100609561**	
Fltru 1690 Road Glide Ultra Abs	1690	2016	2016	6373199	**100609561**	
Fltrxs 1690 Road Glide Special Abs	1690	2015	2016	6373199	**100609561**	
Fxdb 1690 Dyna Street Bob Abs	1690	2014	2017	6373199	**100609561**	
Fxdba 1690 Dyna Street Bob Special Editio	1690	2013	2013	6373199	**100609561**	
Fxdbb 1690 Dyna Street Bob Special Editio	1690	2014	2014	6373199	**100609561**	
Fxdbc 1690 Dyna Street Bob Special Abs	1690	2016	2016	6373199	**100609561**	
Fxdc 1690 Dyna Super Glide Custom Abs	1690	2014	2014	6373199	**100609561**	
Fxdf 1690 Dyna Fat Bob Abs	1690	2013	2017	6373199	**100609561**	
Fxdl 1690 Dyna Low Rider	1690	2014	2014	6373199	**100609561**	
Fxdl 1690 Dyna Low Rider Abs	1690	2015	2017	6373199	**100609561**	
Fxdwg 1690 Dyna Wide Glide Abs	1690	2013	2017	6373199	**100609561**	
Fxsb 1690 Softail Breakout Abs	1690	2013	2017	6373199	**100609561**	
Flhr 1745 Road King Abs	1745	2017	2017	6373199	**100609561**	
Flhrc 1745 Road King Classic Abs	1745	2017	2017	6373199	**100609561**	
Flhtcutg 1745 Tri Glide Ultra	1745	2017	2017	6373199	**100609561**	
Flhtk 1745 Electra Glide Ultra Limited Ab	1745	2017	2017	6373199	**100609561**	
Flhtkl 1745 Electra Glide Ultra Limited L	1745	2017	2017	6373199	**100609561**	
Flhxs 1745 Street Glide Special Abs	1745	2017	2017	6373199	**100609561**	
Flrt 1745 Freewheeler	1745	2017	2017	6373199	**100609561**	
Fltru 1745 Road Glide Ultra Abs	1745	2017	2017	6373199	**100609561**	
Fltrxs 1745 Road Glide Special Abs	1745	2017	2017	6373199	**100609561**	
Flhrse 1800 Cvo Road King Abs	1800	2014	2014	6373199	**100609561**	
Flhrse3 1800 Cvo Screamin Eagle Road King	1800	2007	2007	6373199	**100609561**	
Flhrse4 1800 Cvo Screamin Eagle Road King	1800	2008	2008	6373199	**100609561**	
Flhrse5 1800 Cvo Road King Abs	1800	2013	2013	6373199	**100609561**	
Flhtcuse2 1800 Cvo Ultra Classic Electra	1800	2007	2007	6373199	**100609561**	
Flhtcuse3 1800 Cvo Screamin Eagle Ultra C	1800	2008	2008	6373199	**100609561**	
Flhtcuse4 1800 Cvo Screamin Eagle Ultra C	1800	2009	2009	6373199	**100609561**	
Flhtcuse5 1800 Cvo Screamin Eagle Ultra C	1800	2010	2010	6373199	**100609561**	
Flhtcuse6 1800 Cvo Screamin Eagle Ultra C	1800	2011	2011	6373199	**100609561**	
Flhtcuse7 1800 Cvo Screamin Eagle Ultra C	1800	2012	2012	6373199	**100609561**	
Flhtcuse8 1800 Cvo Ultra Classic Electra	1800	2013	2013	6373199	**100609561**	
Flhtkse 1800 Cvo Electra Glide Limited Ab	1800	2014	2016	6373199	**100609561**	
Flhxse 1800 Cvo Screamin Eagle Street Gli	1800	2010	2010	6373199	**100609561**	
Flhxse 1800 Cvo Street Glide Abs	1800	2015	2016	6373199	**100609561**	
Flhxse2 1800 Cvo Screamin Eagle Street Gl	1800	2011	2011	6373199	**100609561**	
Flhxse3 1800 Cvo Screamin Eagle Street Gl	1800	2012	2012	6373199	**100609561**	
Flss 1800 S Softail Slim S Abs	1800	2016	2017	6373199	**100609561**	
Flstfbs 1800 S Softail Fat Boy Special S	1800	2016	2017	6373199	**100609561**	
Flstnse 1800 Cvo Softail Deluxe Abs	1800	2014	2015	6373199	**100609561**	
Flstse 1800 Cvo Screamin Eagle Softail Co	1800	2010	2010	6373199	**100609561**	
Flstse2 1800 Cvo Screamin Eagle Softail S	1800	2011	2011	6373199	**100609561**	
Flstse3 1800 Cvo Screamin Eagle Softail C	1800	2012	2012	6373199	**100609561**	
Fltrse3 1800 Cvo Screamin Eagle Road Glid	1800	2009	2009	6373199	**100609561**	
Fltruse 1800 Cvo Road Glide Ultra Abs	1800	2015	2016	6373199	**100609561**	
Fltruse 1800 Cvo Screamin Eagle Road Glid	1800	2011	2011	6373199	**100609561**	
Fltrxse 1800 Cvo Screamin Eagle Road Glid	1800	2012	2012	6373199	**100609561**	

Modello *Model*	CC	Da *From*	A *To*	OEM	Codice RMS *RMS Code*	Note *Notes*
Fxdfse 1800 Cvo Screamin Eagle Fat Bob	1800	2009	2009	6373199	**100609561**	
Fxdfse2 1800 Cvo Screamin Eagle Fat Bob	1800	2010	2010	6373199	**100609561**	
Fxdls 1800 S Dyna Low Rider S Abs	1800	2016	2017	6373199	**100609561**	
Fxdse 1800 Cvo Screamin Eagle Dyna	1800	2007	2007	6373199	**100609561**	
Fxdse2 1800 Cvo Screamin Eagle Dyna	1800	2008	2008	6373199	**100609561**	
Fxsbse 1800 Cvo Breakout Abs	1800	2013	2014	6373199	**100609561**	
Fxse 1800 Cvo Pro Street Breakout Abs	1800	2016	2017	6373199	**100609561**	
Fxstsse 1800 Cvo Softail Springer	1800	2007	2007	6373199	**100609561**	
Fxstsse2 1800 Cvo Screamin Eagle Softail	1800	2008	2008	6373199	**100609561**	
Fxstsse3 1800 Cvo Screamin Eagle Softail	1800	2009	2009	6373199	**100609561**	
Flhtkse 1868 Cvo Electra Glide Limited Ab	1868	2017	2017	6373199	**100609561**	
Flhxse 1868 Cvo Street Glide Abs	1868	2017	2017	6373199	**100609561**	
HONDA						
Xr 200 R	200	1984	1985	15410-KF0-020	**100609191**	
Cb 250 N Euro	250	1978	1981	154A1-413-000	**100609321**	
Cb 250 Nd Euro	250	1982	1983	154A1-413-000	**100609321**	
Cb 250 T Twin	250	1977	1978	154A1-413-000	**100609321**	
Cbr 250 R	250	2011	2014	15410-KF0-020	**100609191**	
Cbr 250 Ra Abs	250	2011	2015	15410-KF0-020	**100609191**	
Crf 250 L	250	2013	2016	15410-KF0-020	**100609191**	
Crf 250 M	250	2014	2016	15410-KF0-020	**100609191**	
Crf 250 R	250	2004	2018	15412-MEN-671	**100609521**	
Crf 250 Re	250	2016	2016	15412-MEN-671	**100609521**	
Crf 250 X	250	2004	2018	15412-MEN-671	**100609521**	
Crf 250 Xrl	250	2016	2017	15412-MEN-671	**100609521**	
Nss 250 A Forza Abs	250	2008	2011	-	**100609351**	
Nx 250	250	1988	1995	15410-KF0-020	**100609191**	
Vt 250 F	250	1983	1987	154A1-413-000	**100609321**	
Vt 250 F Spada	250	1988	1990	154A1-413-000	**100609321**	
Xr 250 R	250	1984	2004	15410-KF0-020	**100609191**	
4Rt 260 Montesa Cota	260	2005	2017	15412-MEN-671	**100609521**	
4Rt 260 Montesa Cota Repsol	260	2007	2012	15412-MEN-671	**100609521**	
Cbr 300 Ra Abs	300	2014	2017	15410-KF0-020	**100609191**	
Nss 300 A Forza Abs	300	2013	2019	-	**100609351**	
Nss 300 Forza	300	2013	2017	-	**100609351**	
Sh 300 A I Abs	300	2011	2019	-	**100609351**	
Sh 300 I	300	2007	2010	-	**100609351**	
Trx 300 Fourtrax 2Wd	300	1988	1996	15410-KF0-020	**100609191**	
Trx 300 Fw Fourtrax 4Wd	300	1988	1997	15410-KF0-020	**100609191**	
Xl 350 R	350	1985	1988	15410-KF0-020	**100609191**	
Cb 400 A Twin Automatk	400	1979	1979	154A1-413-000	**100609321**	
Cb 400 N Euro	400	1978	1985	154A1-413-000	**100609321**	
Cb 400 T	400	1977	1981	154A1-413-000	**100609321**	
Cbr 400 R	400	1986	1987	15410-MJO-003	**100609241**	
Cm 400 T	400	1980	1981	154A1-413-000	**100609321**	
Cm 400 T Custom	400	1982	1983	154A1-413-000	**100609321**	
Fjs 400 A Sw-T Abs	400	2009	2016	-	**100609351**	
Fjs 400 D Sw-T	400	2009	2009	-	**100609351**	
Nv 400 C Steed	400	1988	1994	15410-MJO-003	**100609241**	
Trx 400 Fa Fourtrax Rancher At	400	2004	2007	154A1-413-000	**100609321**	
Trx 400 Fw Fourtrax Foreman	400	1996	1997	15410-KF0-020	**100609191**	
Xr 400 R	400	1996	2002	15410-KF0-020	**100609191**	
Cb 450 N	450	1985	1985	154A1-413-000	**100609321**	
Cb 450 S	450	1986	1989	154A1-413-000	**100609321**	
Cm 450 C	450	1982	1982	154A1-413-000	**100609321**	
Cmx 450 C Rebel	450	1986	1987	154A1-413-000	**100609321**	
Crf 450 R	450	2002	2018	15412-MEN-671	**100609521**	
Crf 450 Re	450	2016	2016	15412-MEN-671	**100609521**	

Modello *Model*	CC	Da *From*	A *To*	OEM	Codice RMS *RMS Code*	Note *Notes*
Crf 450 Rx	450	2017	2018	15412-MEN-671	**100609521**	
Crf 450 X	450	2005	2018	15412-MEN-671	**100609521**	
Crf 450 Xrl	450	2016	2016	15412-MEN-671	**100609521**	
Trx 450 Er Sportrax E-Start	450	2006	2009	15412-MEN-671	**100609521**	
Trx 450 R Sportrax K-Start	450	2004	2009	15412-MEN-671	**100609521**	
Cb 500 F	500	2013	2015	15410-MFJ-D01	**100609351**	
Cb 500 Fa Abs	500	2013	2017	15410-MFJ-D01	**100609351**	
Cb 500 X	500	2015	2015	15410-MFJ-D01	**100609351**	
Cb 500 Xa Abs	500	2013	2017	15410-MFJ-D01	**100609351**	
Cbr 500 Ra Abs	500	2013	2017	15410-MFJ-D01	**100609351**	
Cx 500	500	1977	1983	154A1-413-000	**100609321**	
Cx 500 C	500	1980	1981	154A1-413-000	**100609321**	
Cx 500 C Custom	500	1982	1984	154A1-413-000	**100609321**	
Cx 500 E Euro Sports	500	1982	1986	154A1-413-000	**100609321**	
Cx 500 Tc Turbo	500	1982	1982	154A1-413-000	**100609321**	
Gb 500 Clubman	500	1989	1990	15410-KF0-020	**100609191**	
Gl 500 D Silverwing	500	1982	1983	154A1-413-000	**100609321**	
Trx 500 Fa Fourtrax Foreman	500	2001	2014	154A1-413-000	**100609321**	
Trx 500 Fa Fourtrax Foreman Rubicon	500	2001	2003	154A1-413-000	**100609321**	
Vf 500 F Interceptor	500	1984	1987	15410-MJO-003	**100609241**	
Vf 500 F2 Interceptor	500	1984	1987	15410-MJO-003	**100609241**	
Vt 500 C Shadow	500	1983	1984	15410-MJO-003	**100609241**	
Vt 500 E	500	1983	1985	15410-MJO-003	**100609241**	
Xbr 500 Cast Wheel	500	1985	1987	15410-KF0-020	**100609191**	
Xbr 500 S Spoked Wheel	500	1987	1989	15410-KF0-020	**100609191**	
Xr 500 R Pro Link	500	1983	1984	15410-KF0-020	**100609191**	
Cbx 550 F Supersport	550	1982	1984	154A1-413-000	**100609321**	
Cbx 550 F2 Supersport	550	1982	1984	154A1-413-000	**100609321**	
Cb 600 F Hornet	600	2003	2015	15410-MFJ-D01	**100609351**	
Cb 600 Fa Hornet Abs	600	2007	2015	15410-MFJ-D01	**100609351**	
Cbf 600 N	600	2004	2010	15410-MFJ-D01	**100609351**	
Cbf 600 Na Abs	600	2004	2013	15410-MFJ-D01	**100609351**	
Cbf 600 S	600	2004	2010	15410-MFJ-D01	**100609351**	
Cbf 600 Sa Abs	600	2004	2013	15410-MFJ-D01	**100609351**	
Cbr 600 F	600	2001	2013	15410-MFJ-D01	**100609351**	
Cbr 600 Fa Abs	600	2011	2013	15410-MFJ-D01	**100609351**	
Cbr 600 Fr Rossi	600	2001	2002	15410-MFJ-D01	**100609351**	
Cbr 600 Fs Sport	600	2001	2002	15410-MFJ-D01	**100609351**	
Cbr 600 Rr	600	2003	2016	15410-MFJ-D01	**100609351**	
Cbr 600 Rra Abs	600	2009	2016	15410-MFJ-D01	**100609351**	
Fjs 600 A Silver Wing Abs	600	2003	2010	-	**100609351**	
Fjs 600 A Sw-T Abs	600	2011	2016	-	**100609351**	
Fjs 600 D Silver Wing	600	2001	2006	-	**100609351**	
Xl 600 Lm Paris Dakar	600	1985	1987	15410-KF0-020	**100609191**	
Xl 600 R	600	1983	1987	15410-KF0-020	**100609191**	
Xl 600 Rm	600	1986	1986	15410-KF0-020	**100609191**	
Xr 600 R	600	1985	1995	15410-KF0-020	**100609191**	
Xr 600 R	600	1996	2000	15410-KF0-020	**100609191**	
Cb 650 F	650	2016	2016	15410-MFJ-D01	**100609351**	
Cb 650 Fa Abs	650	2014	2017	15410-MFJ-D01	**100609351**	
Cbr 650 Fa Abs	650	2014	2017	15410-MFJ-D01	**100609351**	
Cx 650 C Custom	650	1983	1983	154A1-413-000	**100609321**	
Cx 650 E Euro	650	1983	1983	154A1-413-000	**100609321**	
Cx 650 T Turbo	650	1983	1985	154A1-413-000	**100609321**	
Fmx 650	650	2005	2007	15410-KF0-020	**100609191**	
Fx 650 Vigor	650	1999	2000	15410-KF0-020	**100609191**	
Gl 650 D Silverwing	650	1983	1983	154A1-413-000	**100609321**	
Nx 650 Dominator	650	1990	2000	15410-KF0-020	**100609191**	

Modello *Model*	**CC**	**Da** *From*	**A** *To*	**OEM**	**Codice RMS** *RMS Code*	**Note** *Notes*
Nx 650 Pignone Dominator Spina Larga	650	1988	1988	15410-KF0-020	**100609191**	
Nx 650 Pignone Dominator Spina Stretta	650	1989	1989	15410-KF0-020	**100609191**	
Trx 650 Fa Fourtrax Rincon	650	2003	2005	154A1-413-000	**100609321**	
Xr 650 L	650	1993	1996	15410-KF0-020	**100609191**	
Xr 650 R	650	2000	2007	15410-KF0-020	**100609191**	
Trx 680 Fa Fourtrax Rincon	680	2006	2017	154A1-413-000	**100609321**	
Ctx 700 D Dct Halbverkleidung Abs	700	2014	2016	15410-MFJ-D01	**100609351**	
Ctx 700 Nd Dct Lenkerverkleidung Abs	700	2014	2016	15410-MFJ-D01	**100609351**	
Nc 700 D Integra Dct Abs	700	2012	2013	-	**100609351**	
Nc 700 S	700	2012	2014	15410-MFJ-D01	**100609351**	
Nc 700 Sa Abs	700	2012	2014	15410-MFJ-D01	**100609351**	
Nc 700 Sd Dct Abs	700	2012	2014	15410-MFJ-D01	**100609351**	
Nc 700 X	700	2012	2014	15410-MFJ-D01	**100609351**	
Nc 700 Xa Abs	700	2012	2014	15410-MFJ-D01	**100609351**	
Nc 700 Xd Dct Abs	700	2012	2014	15410-MFJ-D01	**100609351**	
Nsa 700 A Dn-01 Abs	700	2008	2011	15410-MFJ-D01	**100609351**	
Nt 700 V Deauville	700	2006	2013	15410-MFJ-D01	**100609351**	
Nt 700 Va Deauville Abs	700	2006	2016	15410-MFJ-D01	**100609351**	
Trx 700 Xx	700	2008	2011	15410-KF0-020	**100609191**	
Xl 700 V Transalp	700	2008	2010	15410-MFJ-D01	**100609351**	
Xl 700 Va Transalp Abs	700	2008	2013	15410-MFJ-D01	**100609351**	
Cb 750 Nighthawk	750	1991	1992	15410-MFJ-D01	**100609351**	
Cbx 750 F	750	1984	1986	15410-MJO-003	**100609241**	
Nc 750 D Integra Dct Abs	750	2014	2019	-	**100609351**	
Nc 750 J Nm4 Vultus Dct Abs	750	2014	2017	15410-MFJ-D01	**100609351**	
Nc 750 Sa Abs	750	2014	2017	15410-MFJ-D01	**100609351**	
Nc 750 Sd Dct Abs	750	2014	2017	15410-MFJ-D01	**100609351**	
Nc 750 Xa Abs	750	2014	2017	15410-MFJ-D01	**100609351**	
Nc 750 Xd Dct Abs	750	2014	2017	15410-MFJ-D01	**100609351**	
Vf 750 C Magna	750	1982	1984	15410-MJO-003	**100609241**	
Vf 750 F Interceptor V45	750	1983	1984	15410-MJO-003	**100609241**	
Vf 750 S Sabre V45	750	1982	1984	15410-MJO-003	**100609241**	
Vfr 750 F	750	1986	1987	15410-MJO-003	**100609241**	
Vt 750 C Shadow	750	1987	1987	15410-MJO-003	**100609241**	
Vt 750 C Shadow	750	2004	2009	15410-MFJ-D01	**100609351**	
Vt 750 C2 Shadow Spirit	750	2007	2009	15410-MFJ-D01	**100609351**	
Vt 750 C2B Shadow Black Spirit	750	2010	2016	15410-MFJ-D01	**100609351**	
Vt 750 C2S Shadow Abs	750	2010	2015	15410-MFJ-D01	**100609351**	
Vt 750 Ca Shadow	750	2006	2009	15410-MFJ-D01	**100609351**	
Vt 750 Cs Shadow Abs	750	2010	2016	15410-MFJ-D01	**100609351**	
Vt 750 S	750	2010	2014	15410-MFJ-D01	**100609351**	
X-Adv 750 Dct Abs	750	2017	2019	-	**100609351**	
Xlv 750 R	750	1983	1985	15410-MJO-003	**100609241**	
Vfr 800	800	2002	2010	15410-MFJ-D01	**100609351**	
Vfr 800 A Abs	800	2002	2013	15410-MFJ-D01	**100609351**	
Vfr 800 F Abs	800	2014	2017	15410-MFJ-D01	**100609351**	
Vfr 800 X Crossrunner Abs	800	2011	2017	15410-MFJ-D01	**100609351**	
Cb 900 F Hornet	900	2002	2006	15410-MFJ-D01	**100609351**	
Cbr 900 Rr Fireblade	900	2000	2003	15410-MFJ-D01	**100609351**	
Cb 1000 R	1000	2008	2016	15410-MFJ-D01	**100609351**	
Cb 1000 Ra Abs	1000	2008	2016	15410-MFJ-D01	**100609351**	
Cbf 1000	1000	2006	2010	15410-MFJ-D01	**100609351**	
Cbf 1000 A Abs	1000	2006	2012	15410-MFJ-D01	**100609351**	
Cbf 1000 F	1000	2010	2014	15410-MFJ-D01	**100609351**	
Cbf 1000 Fa Abs	1000	2010	2016	15410-MFJ-D01	**100609351**	
Cbr 1000 Ra Fireblade Abs	1000	2009	2016	15410-MFJ-D01	**100609351**	
Cbr 1000 Rr Fireblade	1000	2004	2016	15410-MFJ-D01	**100609351**	
Cbr 1000 Rr Fireblade Abs	1000	2017	2017	15410-MFJ-D01	**100609351**	

Modello *Model*	CC	Da *From*	A *To*	OEM	Codice RMS *RMS Code*	Note *Notes*
Cbr 1000 Rr Fireblade Sp-1 Abs	1000	2017	2017	15410-MFJ-D01	**100609351**	
Cbr 1000 Rr Fireblade Sp-2 Abs	1000	2017	2017	15410-MFJ-D01	**100609351**	
Cbr 1000 Rrs Fireblade Edition	1000	2007	2008	15410-MFJ-D01	**100609351**	
Cbr 1000 S Fireblade Sp	1000	2014	2016	15410-MFJ-D01	**100609351**	
Cbr 1000 Sa Fireblade Sp Abs	1000	2014	2016	15410-MFJ-D01	**100609351**	
Crf 1000 L Africa Twin	1000	2016	2016	15410-MFJ-D01	**100609351**	
Crf 1000 La Africa Twin Abs	1000	2017	2017	15410-MFJ-D01	**100609351**	
Crf 1000 La Africa Twin Track Abs	1000	2016	2016	15410-MFJ-D01	**100609351**	
Crf 1000 Ld Africa Twin Abs Dct	1000	2017	2017	15410-MFJ-D01	**100609351**	
Crf 1000 Ld Africa Twin Abs Dct Track	1000	2016	2016	15410-MFJ-D01	**100609351**	
Vf 1000 F Interceptor	1000	1984	1985	15410-MJO-003	**100609241**	
Vf 1000 F2 Bol D'Or	1000	1985	1985	15410-MJO-003	**100609241**	
Vf 1000 R	1000	1984	1986	15410-MJO-003	**100609241**	
Vtr 1000 F Fire Storm	1000	2003	2006	15410-MFJ-D01	**100609351**	
Vtr 1000 Sp1	1000	2001	2001	15410-MFJ-D01	**100609351**	
Vtr 1000 Sp2	1000	2002	2006	15410-MFJ-D01	**100609351**	
Xl 1000 V Varadero	1000	2003	2013	15410-MFJ-D01	**100609351**	
Xl 1000 Va Varadero Abs	1000	2004	2013	15410-MFJ-D01	**100609351**	
Cb 1100 A Cast Wheel Abs	1100	2013	2016	15410-MFJ-D01	**100609351**	
Cb 1100 Ex Ca Spoked Wheel Abs	1100	2017	2017	15410-MFJ-D01	**100609351**	
Cb 1100 Ex Sa Spoked Wheel Abs	1100	2014	2016	15410-MFJ-D01	**100609351**	
Cb 1100 Rs Na Cast Wheel Abs	1100	2017	2017	15410-MFJ-D01	**100609351**	
Vf 1100 C Magna V65	1100	1983	1986	15410-MJO-003	**100609241**	
Vt 1100 C Shadow	1100	1988	1989	15410-MJO-003	**100609241**	
Vfr 1200 F Abs	1200	2010	2016	15410-MFJ-D01	**100609351**	
Vfr 1200 Fd Dct Abs	1200	2010	2016	15410-MFJ-D01	**100609351**	
Vfr 1200 X Crosstourer Abs	1200	2012	2017	15410-MFJ-D01	**100609351**	
Vfr 1200 Xd Crosstourer Dct Abs	1200	2012	2017	15410-MFJ-D01	**100609351**	
Vfr 1200 Xdl Crosstourer Dct Abs	1200	2014	2016	15410-MFJ-D01	**100609351**	
Vfr 1200 Xl Crosstourer Abs	1200	2014	2016	15410-MFJ-D01	**100609351**	
Cb 1300 A Super Four	1300	2005	2009	15410-MFJ-D01	**100609351**	
Cb 1300 F Super Four	1300	2003	2004	15410-MFJ-D01	**100609351**	
Cb 1300 Sa Super Four Abs	1300	2005	2013	15410-MFJ-D01	**100609351**	
Cb 1300 Super Four	1300	2005	2005	15410-MFJ-D01	**100609351**	
Ctx 1300 A Abs	1300	2014	2016	15410-MFJ-D01	**100609351**	
St 1300 A Pan European Abs	1300	2002	2016	15410-MFJ-D01	**100609351**	
St 1300 Pan European	1300	2002	2008	15410-MFJ-D01	**100609351**	
Vt 1300 Cx	1300	2010	2016	15410-MFJ-D01	**100609351**	
Vt 1300 Cxa Abs	1300	2010	2015	15410-MFJ-D01	**100609351**	
Vtx 1300 S	1300	2003	2007	15410-MFJ-D01	**100609351**	
Gl 1800 A Goldwing Abs	1800	2001	2005	15410-MFJ-D01	**100609351**	
Gl 1800 B Goldwing/F6B/Bagger Abs	1800	2013	2016	15410-MFJ-D01	**100609351**	
Gl 1800 C Goldwing/F6C/Valkyrie Abs	1800	2014	2016	15410-MFJ-D01	**100609351**	
Gl 1800 Goldwing Abs	1800	2006	2013	15410-MFJ-D01	**100609351**	
Gl 1800 Goldwing Airbag/Navi Abs	1800	2007	2016	15410-MFJ-D01	**100609351**	
Vtx 1800 C	1800	2002	2004	15410-MFJ-D01	**100609351**	
Vtx 1800 C1	1800	2005	2006	15410-MFJ-D01	**100609351**	
HUSABERG						
Fe 250 Ie Enduro	250	2013	2013	-	**100609601**	
Fe 250 Ie Enduro	250	2014	2014	-	**100609591**	
Fe 350 Ie Enduro	350	2013	2014	-	**100609591**	
Fe 390 Ie Enduro	390	2010	2012	-	**100609601**	
Fc 400 Cross	400	1997	2000	-	**100609211**	
Fe 400 E Enduro	400	1997	2003	-	**100609211**	
Fe 400 Enduro	400	1997	2000	-	**100609211**	
Fs 400 C Supermoto	400	2001	2003	-	**100609211**	
Fs 400 E Supermoto	400	2001	2003	-	**100609211**	
Fc 450 Cross	450	2004	2006	-	**100609211**	

Modello *Model*	CC	Da *From*	A *To*	OEM	Codice RMS *RMS Code*	Note *Notes*
Fe 450 E Enduro	450	2004	2008	-	**100609211**	
Fe 450 Ie Enduro	450	2009	2014	-	**100609601**	
Fs 450 C Supermoto	450	2004	2005	-	**100609211**	
Fs 450 E Supermoto	450	2004	2008	-	**100609211**	
Fx 450 Ie Cross	450	2010	2011	-	**100609601**	
Fc 470 Cross	470	2001	2002	-	**100609211**	
Fc 501 Cross	501	1997	2000	-	**100609211**	
Fe 501 E Enduro	501	1996	2004	-	**100609211**	
Fe 501 E Supermoto	501	2000	2000	-	**100609211**	
Fe 501 Enduro	501	1997	2000	-	**100609211**	
Fe 501 Ie Enduro	501	2013	2014	-	**100609601**	
Fe 501 Supermoto	501	2000	2000	-	**100609211**	
Fc 550 Cross	550	2001	2006	-	**100609211**	
Fe 550 E Enduro	550	2004	2008	-	**100609211**	
Fs 550 E Supermoto	550	2007	2007	-	**100609211**	
Fe 570 Ie Enduro	570	2009	2012	-	**100609601**	
Fs 570 Ie Supermoto	570	2010	2011	-	**100609601**	
Fc 600 Cross	600	1997	2000	-	**100609211**	
Fc 600 Supermoto	600	1999	2000	-	**100609211**	
Fe 600 E Enduro	600	1997	2000	-	**100609211**	
Fe 600 E Supermoto	600	2000	2000	-	**100609211**	
Fe 600 Enduro	600	1997	2000	-	**100609211**	
Fe 600 Supermoto	600	2000	2000	-	**100609211**	
Fe 650 E Enduro	650	2001	2008	-	**100609211**	
Fs 650 C Supermoto	650	2001	2008	-	**100609211**	
Fs 650 E Supermoto	650	2001	2008	-	**100609211**	
HUSQVARNA						
Tc	250	2009	2009	8000A7019	**100609521**	
Te-Tc-Txc	250	2010	2010	8000A7019	**100609521**	
Te-Tc-Txc 250-310	250	2011	2014	8000A7019	**100609521**	
Te-Tc-Txc-Smr 250-310-450-510	250	2008	2009	8000B0593	**100609801**	
Te-Tc-Txc-Smr 310-450-510	310	2010	2010	8000B0593	**100609801**	
Sm 450 Rr	450	2008	2008	8000B0593	**100609801**	
Sm 450-530 Rr	450	2009	2009	8000B0593	**100609801**	
Smr 449-511	450	2011	2011	7715456	**100609781**	
Tc 449	450	2011	2013	7715456	**100609781**	
Te 449-511	450	2011	2014	7715456	**100609781**	
Txc 449-511	450	2011	2012	7715456	**100609781**	
Txc 511	480	2013	2013	7715456	**100609781**	
Smr 511	510	2012	2012	7715456	**100609781**	
Te-Sms	630	2010	2011	8000B0593	**100609801**	
Nuda - Nuda R	900	2012	2012	7719357	**100609691**	
Nuda - Nuda R Abs	900	2013	2013	7719357	**100609691**	
HYOSUNG						
Aquila Gv 125 Classic Euro3	125	2007	2009	1651005240HAS	**100609061**	
Gt 125 Euro 3	125	2007	2008	1651005240HAS	**100609061**	
Gt 125R	125	2006	2006	1651005240HAS	**100609061**	
Karion Rt 125 D Euro3	125	2007	2011	1651005240HAS	**100609061**	
Rt125	125	2004	2006	1651005240HAS	**100609061**	
Rx 125 Euro3	125	2007	2008	1651005240HAS	**100609061**	
Rx 125Sm Euro 3	125	2007	2014	1651005240HAS	**100609061**	
Aquila Gv 250 Fi & Ei Euro3	250	2008	2009	1651005240HAS	**100609061**	
Gt250 Rc	250	2013	2014	1651005240HAS	**100609061**	
ITALJET						
Jet-Set 125	125	2002	2003	210483727	**100609041**	
Torpedo 125	125	1999	2000	210410229	**100609031**	
Torpedo 125	125	2001	2003	210483727	**100609041**	

Modello *Model*	CC	Da *From*	A *To*	OEM	Codice RMS *RMS Code*	Note *Notes*
KAWASAKI						
Klx A1-A4	110	2002	2005	520101053	**100609191**	
Klx A6F-A9F	110	2006	2009	520101053	**100609191**	
Klx Caf-Cbf-Ccf-Cdf-Cef	110	2010	2014	520101053	**100609191**	
Klx Cff-Cgf-Chf	110	2015	2017	520101053	**100609191**	
Bn Eliminator A3-A5	125	2000	2002	520101053	**100609191**	
Bn Eliminator A6-A8	125	2003	2005	520101053	**100609191**	
Bn Eliminator A6F-A7F	125	2006	2007	520101053	**100609191**	
J125 Abs Bgf-Bgfa	125	2016	2016	52010Y001	**100609480**	
J125 Abs Chf-Chfa	125	2017	2017	52010Y001	**100609480**	
J125 Agf-Agfa	125	2016	2016	52010Y001	**100609480**	
Klx Caf-Cbf-Ccf-Ccs-Cdf	125	2010	2013	520101053	**100609191**	
Klx Cds-Cef-Cff-Cgf	125	2013	2016	520100552	**100609191**	
Klx D-Tracker Daf-Dbf-Dcf-Ddf-Def	125	2010	2014	520101053	**100609191**	
Klx D-Tracker Hgf	150	2016	2016	520100552	**100609191**	
Klx150L Eef	150	2014	2014	520100552	**100609191**	
Klf A10-A11-A12-A13-A14	220	1997	2001	16099004	**100609410**	
Klf A15	220	2002	2002	16099004	**100609410**	
Klf A5-A6-A7-A8-A8A	220	1992	1995	16099004	**100609410**	
El F2	250	1996	1998	16099003	**100609531**	
El F5	250	2001	2001	16099003	**100609531**	
El F6	250	2003	2003	16099003	**100609531**	
Klf A1-A2-A3	250	2003	2005	16099004	**100609410**	
Klf A6F-A9F	250	2006	2009	16099004	**100609410**	
Klr D4-D5-D6	250	1987	1989	16099004	**100609410**	
Klx E1-E3	250	1993	1995	520101053	**100609191**	
Klx S9F-Saf-Sbf-Scf-Sdf	250	2009	2013	520101053	**100609191**	
Klx Sef-Sff-Sgf	250	2014	2016	520101053	**100609191**	
Klx Shf	250	2017	2017	520101053	**100609191**	
Ksf A10-A11-A12-A13-A14	250	1996	2000	16099004	**100609410**	
Kx F Ahf	250	2017	2017	520100001	**100609571**	
Kx F N1	250	2004	2004	520100001	**100609571**	
Kx F N2	250	2005	2005	520100001	**100609571**	
Kx F T6F	250	2006	2006	520100001	**100609571**	
Kx F T7F	250	2007	2007	520100001	**100609571**	
Kx F T8F	250	2008	2008	520100001	**100609571**	
Kx F W9F	250	2009	2009	520100001	**100609571**	
Kx F Xaf	250	2010	2010	520100001	**100609571**	
Kx F Ybf	250	2011	2011	520100001	**100609571**	
Kx F Ycf	250	2012	2012	520100001	**100609571**	
Kx F Zdf-Zef	250	2013	2014	520100001	**100609571**	
Kx F Zff-Zgf	250	2015	2016	520100001	**100609571**	
Ninja 250R K8F-K9F-K9Fa-Kaf	250	2008	2010	16099003	**100609531**	
Ninja 250R Kbf-Kbfa-Kcf	250	2011	2012	16099003	**100609531**	
Ninja 250Sl Abs Bff-Bfs-Bfsa-Bgf-Bgfa	250	2015	2016	520101053	**100609191**	
Ninja 250Sl Aff-Afs-Afsa-Agf-Agfa	250	2015	2016	520101053	**100609191**	
Z250Sl Abs Fff-Ffs-Fgf	250	2015	2016	520101053	**100609191**	
Z250Sl Eff-Efs-Egf	250	2015	2016	520101053	**100609191**	
Zzr H10	250	1999	1999	16099003	**100609531**	
Zzr H12-H13	250	2001	2002	16099003	**100609531**	
Zzr H14	250	2003	2003	16099003	**100609531**	
Zzr H7-H8	250	1996	1998	16099003	**100609531**	
J300 Abs Bef-Befa-Bff-Bffa	300	2014	2015	52010Y001	**100609480**	
J300 Abs Bgf-Bgfa	300	2016	2016	52010Y001	**100609480**	
J300 Abs Chf-Chfa	300	2017	2017	52010Y001	**100609480**	
J300 Aef-Aefa-Aff-Affa	300	2014	2015	52010Y001	**100609480**	
J300 Agf-Agfa	300	2016	2016	52010Y001	**100609480**	
Kle Versys-X Abs Chf-Cjf	300	2017	2018	160970008	**100609501**	

Modello *Model*	CC	Da *From*	A *To*	OEM	Codice RMS *RMS Code*	Note *Notes*
Klf 4X4 C10-C11-C12-C13-C14	300	1998	2002	16099004	**100609410**	
Klf B10-B11-B12-B13-B14	300	1997	2001	16099004	**100609410**	
Klx A2-A6	300	1997	2001	520101053	**100609191**	
Klx A7-A8	300	2002	2003	520101053	**100609191**	
Ninja 300 Abs Bdf-Bef-Befa-Bff-Bffa	300	2013	2015	160970008	**100609501**	
Ninja 300 Abs Bgf-Bgfa	300	2016	2016	160970008	**100609501**	
Ninja 300 Adf-Aef-Aefa-Aff-Affa	300	2013	2015	160970008	**100609501**	
Ninja 300 Agf-Agfa	300	2016	2016	160970008	**100609501**	
Z300 Abs Bhf-Bhfa-Bjf-Bjfa	300	2017	2018	160970008	**100609501**	
Z300 Aff-Agf	300	2015	2016	160970008	**100609501**	
Z300 Bff-Bgf Abs	300	2015	2016	160970008	**100609501**	
Kvf 2X4 B6F-B9F	360	2006	2009	160970004	**100609501**	
Kvf 4X4 A6F-Aaf	360	2006	2010	160970004	**100609501**	
Klf 4X4 B4-B5-B6-B7	400	1996	1999	160971063	**100609351**	
Zxr H2	400	1990	1990	160971063	**100609351**	
Zxr L1-L3	400	1991	1993	160971063	**100609351**	
Zxr L4-L8	400	1994	1998	160971063	**100609351**	
Zxr L9	400	1999	1999	160971063	**100609351**	
Kfx R B8F-B9F-B9Fa-Baf-Bbf	450	2008	2011	520101053	**100609191**	
Kfx R Bcs-Bdf-Bef	450	2012	2014	520101053	**100609191**	
Klx R A8F-A9F-Aaf-Abf-Acf	450	2008	2012	520101053	**100609191**	
Klx R Adf-Aef-Aff-Agf-Ahf	450	2013	2017	520101053	**100609191**	
Kx F D6F	450	2006	2006	520101053	**100609191**	
Kx F D7F	450	2007	2007	520101053	**100609191**	
Kx F D8F	450	2008	2008	520101053	**100609191**	
Kx F E9F-E9Fa	450	2009	2009	520101053	**100609191**	
Kx F Ebf	450	2011	2011	520101053	**100609191**	
Kx F Fcf	450	2012	2012	520101053	**100609191**	
Kx F Fdf-Fef	450	2013	2014	520101053	**100609191**	
Kx F Fff	450	2015	2015	520101053	**100609191**	
Kx F Fi Eaf	450	2010	2010	520101053	**100609191**	
Kx F Hgf	450	2016	2016	520100001	**100609571**	
Kx F Hhf	450	2017	2017	520100001	**100609571**	
En A3-A4	500	1992	1993	160971063	**100609351**	
En B1-B2	500	1994	1995	160971063	**100609351**	
En C1-C5	500	1996	2000	160971063	**100609351**	
En C8	500	2003	2003	160971072	**100609351**	
Er-5 A1-A4	500	1997	2000	160971063	**100609351**	
Er-5 C1-C3	500	2001	2003	160971072	**100609351**	
Er-5 C4P-C5P	500	2004	2005	160971072	**100609351**	
Gpz S E10	500	2003	2003	160971072	**100609351**	
Gpz S E5-E7	500	1998	2000	160971063	**100609351**	
Kle A13	500	2003	2004	160971072	**100609351**	
Kle A5-A9	500	1995	1999	160971063	**100609351**	
Kle B1P	500	2005	2005	160971072	**100609351**	
Kle B6F-B7F	500	2006	2007	160970004	**100609501**	
Gpz A1-A2	550	1984	1985	16099003	**100609531**	
Gpx R C1-C3	600	1988	1990	16099003	**100609531**	
Gpz R A3-A4	600	1987	1988	16099003	**100609531**	
Klr B6-B9	600	1991	1994	16099004	**100609410**	
Ninja Zx-6R F1-F3	600	1995	1997	160971063	**100609351**	
Ninja Zx-6R P7F-P8F	600	2007	2008	160970004	**100609501**	
Ninja Zx-6R R9F-Raf-Rbf-Rcf-Rdf	600	2009	2013	160970004	**100609501**	
Ninja Zx-6R Ref-Rff-Rgf	600	2014	2016	160970008	**100609501**	
Zl Eliminator B1	600	1995	1997	16099003	**100609531**	
Zzr D1	600	1990	1990	160971063	**100609351**	
Zzr D2-D2A-D3	600	1991	1992	160971063	**100609351**	
Zzr E11	600	2003	2003	160971072	**100609351**	

Modello *Model*	CC	Da *From*	A *To*	OEM	Codice RMS *RMS Code*	Note *Notes*
Zzr E12H-E13H	600	2004	2005	160971072	**100609351**	
Zzr E1-E3	600	1993	1995	160971063	**100609351**	
Zzr E4-E6	600	1996	1998	160971063	**100609351**	
Zzr E6F	600	2006	2006	160971072	**100609351**	
Zzr E7-E9	600	1999	2001	160971063	**100609351**	
Ninja Zx-6R Abs Fdf-Fef-Fff-Fffa	636	2013	2015	160970008	**100609501**	
Ninja Zx-6R Abs Fgf-Fgfa	636	2016	2016	160970008	**100609501**	
Ninja Zx-6R Abs Fhf	636	2017	2017	160970008	**100609501**	
Ninja Zx-6R Edf-Eef-Eff-Effa	636	2013	2015	160970008	**100609501**	
Ninja Zx-6R Egf-Egfa	636	2016	2016	160970008	**100609501**	
Ej 650 (W650) C5	650	2003	2003	160971072	**100609351**	
Ej 650 (W650) C6F	650	2006	2006	160971072	**100609351**	
Ej 650 (W650) C6P-C7P	650	2004	2005	160971072	**100609351**	
Er-6F A6F-A8F	650	2006	2008	160970004	**100609501**	
Er-6F Abs B6F-B8F	650	2006	2008	160970004	**100609501**	
Er-6F Abs D9F-Daf-Dbf	650	2009	2011	160970004	**100609501**	
Er-6F Abs Fcf-Fds-Fef-Fff-Fgf	650	2012	2016	160970008	**100609501**	
Er-6F C9F-Caf-Cbf	650	2009	2011	160970004	**100609501**	
Er-6F Ecf-Eds-Eef-Eff-Egf	650	2012	2016	160970008	**100609501**	
Er-6N A6S-A8F	650	2006	2008	160970004	**100609501**	
Er-6N Abs B6F-B8F	650	2006	2008	160970004	**100609501**	
Er-6N Abs D9F-Daf-Dbf	650	2009	2011	160970004	**100609501**	
Er-6N Abs Fcf-Fds-Fef-Fff-Fgf	650	2012	2016	160970008	**100609501**	
Er-6N C9F-Caf-Cbf	650	2009	2011	160970004	**100609501**	
Er-6N Ecf-Eds-Eef-Eff-Egf	650	2012	2016	160970008	**100609501**	
Kl A1-A3	650	1987	1989	16099004	**100609410**	
Kl Tengai B1-B3	650	1989	1991	16099004	**100609410**	
Kle Versys A7F-A8F-A9F	650	2007	2009	160970004	**100609501**	
Kle Versys Abs B7F-B8F-B9F	650	2007	2009	160970004	**100609501**	
Kle Versys Abs Daf	650	2010	2010	160970004	**100609501**	
Kle Versys Abs Dbf-Dcf-Ddf-Def	650	2011	2014	160970004	**100609501**	
Kle Versys Abs Fff-Fgf	650	2015	2016	160970008	**100609501**	
Kle Versys Abs Fhf-Fhfa-Fjf-Fjfa	650	2017	2018	160970008	**100609501**	
Kle Versys Caf	650	2010	2010	160970004	**100609501**	
Kle Versys Cbf-Ccf-Cdf-Cef	650	2011	2014	160970004	**100609501**	
Kle Versys Eff-Egf	650	2015	2016	160970008	**100609501**	
Klr C10	650	2004	2004	16099004	**100609410**	
Klr C1-C5	650	1995	1999	16099004	**100609410**	
Klr C7-C8	650	2001	2002	16099004	**100609410**	
Klr C9	650	2003	2003	16099004	**100609410**	
Klx C1-C3	650	1993	1995	16099004	**100609410**	
Klx R D1-D6	650	1996	2001	16099004	**100609410**	
Kvf 4X4 Brute Force D6F-Daf	650	2006	2010	160970004	**100609501**	
Ninja 650 Abs Khf-Khfa-Kjf-Kjfa	650	2017	2018	160970008	**100609501**	
Ninja 650 Abs Kkf-Kkfa	650	2019	2019	160970008	**100609501**	
Vulcan S Abs Bff-Bgf-Bgfa	650	2015	2016	160970008	**100609501**	
Vulcan S Abs Dhf-Dhfa-Djf-Djfa	650	2017	2018	160970008	**100609501**	
Vulcan S Aff-Agf-Agfa	650	2015	2016	160970008	**100609501**	
Vulcan S Cafe' Abs Ehf-Ejf	650	2017	2018	160970008	**100609501**	
Vulcan S Dkf-Dkfa	650	2019	2019	160970008	**100609501**	
Z650 Abs Hhf-Hjf-Hkf	650	2017	2019	160970008	**100609501**	
Kfx A6F-A9F-Abf	700	2006	2011	160970004	**100609501**	
Gpx R F1-F3	750	1987	1989	16099003	**100609531**	
Ninja Zx-7R P1-P4	750	1996	1999	160971063	**100609351**	
Ninja Zx-7R P5-P7	750	2000	2002	160971063	**100609351**	
Ninja Zx-7Rr N1	750	1996	1998	160971063	**100609351**	
Z750 Abs M7F-Maf-Mas	750	2007	2010	160970004	**100609501**	
Z750 Abs Mbf-Mcf	750	2011	2012	160970004	**100609501**	

Modello *Model*	CC	Da *From*	A *To*	OEM	Codice RMS *RMS Code*	Note *Notes*
Z750 L7F-Laf-Las	750	2007	2010	160970004	**100609501**	
Z750 Lbf-Lcf	750	2011	2012	160970004	**100609501**	
Z750R Abs Pbf-Pcf	750	2011	2012	160970004	**100609501**	
Z750R Nbf-Ncf	750	2011	2012	160970004	**100609501**	
Zr Zephyr C1-C4	750	1991	1994	16099003	**100609531**	
Zr-7 F1	750	1999	1999	16099003	**100609531**	
Zr-7 F3	750	2001	2001	16099003	**100609531**	
Zr-7 F5	750	2003	2003	16099003	**100609531**	
Zr-7S H1-H3	750	2001	2003	16099003	**100609531**	
Zxr H1 Stinger	750	1989	1989	160971063	**100609351**	
Zxr H2 Stinger	750	1990	1990	16099003	**100609531**	
Zxr J1-J2	750	1991	1992	160971063	**100609351**	
Zxr L1-L3	750	1993	1995	160971063	**100609351**	
Zxr R K1	750	1991	1991	160971063	**100609351**	
Zxr R M1-M2	750	1993	1994	160971063	**100609351**	
Ej 800 (W800) Abf-Abs-Acf-Acfa	800	2011	2012	160970004	**100609501**	
Ej 800 (W800) Adf-Adfa-Aef-Aefa	800	2013	2014	160970004	**100609501**	
Ej 800 (W800) Aff-Affa-Agf-Agfa-Ags	800	2015	2016	160970008	**100609501**	
Vn A1-A4	800	1995	1998	160971063	**100609351**	
Vn Classic B10P	800	2005	2005	160971072	**100609351**	
Vn Classic B1-B4	800	1996	1999	160971063	**100609351**	
Vn Classic B6F	800	2006	2006	160971072	**100609351**	
Vn Classic B8	800	2003	2003	160971072	**100609351**	
Vn Classic B9P	800	2004	2004	160971072	**100609351**	
Vn Drifter C1-C2	800	1999	2001	160971063	**100609351**	
Z800 Abs Bds-Bef-Bff-Bgf	800	2013	2016	160970008	**100609501**	
Z800 Ads-Aef-Aff-Agf	800	2013	2016	160970008	**100609501**	
Z800 E Abs Dds-Def-Dff-Dgf-Dgfa	800	2013	2016	160970008	**100609501**	
Z800 E Abs Special Edition Fgf	800	2016	2016	160970008	**100609501**	
Z800 E Cds-Cef-Cff-Cgf-Cgfa	800	2013	2016	160970008	**100609501**	
Z800 E Special Edition Egf	800	2016	2016	160970008	**100609501**	
Ninja Zx-9R B1-B3	900	1994	1996	160971063	**100609351**	
Ninja Zx-9R B4	900	1997	1997	160971063	**100609351**	
Vn Classic B6F-Baf	900	2006	2010	160970004	**100609501**	
Vn Classic Bbf-Bbfa-Bcf-Bcfa	900	2011	2012	160970004	**100609501**	
Vn Classic Bdf-Bef-Bdfa-Befa	900	2013	2014	160970004	**100609501**	
Vn Custom C7F-C8F-C9Fa-Caf-Cbf	900	2007	2011	160970004	**100609501**	
Vn Vulcan Classic Bff-Bffa-Bgf-Bgfa	900	2015	2016	160970008	**100609501**	
Vn Vulcan Custom Ccfa-Cdf-Cefa-Cffa	900	2012	2015	160970008	**100609501**	
Vn Vulcan Custom Cgf	900	2016	2016	160970008	**100609501**	
Z900 A2 Djf	900	2018	2018	160970008	**100609501**	
Z900 Abs Bhf	900	2017	2017	160970008	**100609501**	
Z900 Bjf	900	2018	2018	160970008	**100609501**	
Z900Rs Cafe Ejf	900	2018	2018	160970008	**100609501**	
Z900Rs Cjf-Cjfa-Cjfb	900	2018	2018	160970008	**100609501**	
Z900Rs Ckf-Ckfa-Ckfb	900	2019	2019	160970008	**100609501**	
Gpz Rx A1-A3	1000	1986	1988	16099003	**100609531**	
Gtr A11	1000	1996	1997	16099003	**100609531**	
Gtr A18	1000	2003	2003	16099003	**100609531**	
Klv A1H-A2H	1000	2004	2005	52010S005	**100609511**	
Klz Versys Acf-Adf-Aef	1000	2012	2014	160970004	**100609501**	
Klz Versys Bff-Bgf	1000	2015	2016	160970008	**100609501**	
Klz Versys Bhf-Bjf-Bjfa	1000	2017	2018	160970008	**100609501**	
Ninja Zx-10R Abs Kbf-Kcf-Kdf-Kef	1000	2011	2014	160970004	**100609501**	
Ninja Zx-10R Abs Kff-Kffa	1000	2015	2015	160970008	**100609501**	
Ninja Zx-10R D6F-D7F	1000	2006	2007	160970004	**100609501**	
Ninja Zx-10R E8F-E9F	1000	2008	2009	160970004	**100609501**	
Ninja Zx-10R Faf	1000	2010	2010	160970004	**100609501**	

Modello *Model*	CC	Da *From*	A *To*	OEM	Codice RMS *RMS Code*	Note *Notes*
Ninja Zx-10R Jbf-Jcf-Jdf-Jef	1000	2011	2014	160970004	**100609501**	
Ninja Zx-10R Jff-Jffa	1000	2015	2015	160970008	**100609501**	
Z1000 Abs C7F-C9F	1000	2007	2009	160970004	**100609501**	
Z1000 Abs Eaf-Ebf-Ecf-Ecfa	1000	2010	2012	160970004	**100609501**	
Z1000 Abs Edf-Edfa	1000	2013	2013	160970004	**100609501**	
Z1000 Abs Gef-Gefa-Gff-Ggf	1000	2014	2016	160970008	**100609501**	
Z1000 Abs Hhf-Hjf-Hkf	1000	2017	2019	160970008	**100609501**	
Z1000 B7F-B9F	1000	2007	2009	160970004	**100609501**	
Z1000 Daf-Das-Dbf-Dcf-Dcfa	1000	2010	2012	160970004	**100609501**	
Z1000 Ddf-Ddfa	1000	2013	2013	160970004	**100609501**	
Z1000 Fef-Fefa-Fff-Fgf	1000	2014	2016	160970008	**100609501**	
Z1000 R Edition Jhf-Jjf-Jkf	1000	2017	2019	160970008	**100609501**	
Z1000Sx Abs Hbf-Hcf-Hdf	1000	2011	2013	160970004	**100609501**	
Z1000Sx Abs Mef-Mff-Mgf	1000	2014	2016	160970008	**100609501**	
Z1000Sx Abs Whf-Wjf-Wkf	1000	2017	2019	160970008	**100609501**	
Z1000Sx Gbf-Gcf-Gdf	1000	2011	2013	160970004	**100609501**	
Z1000Sx Lef-Lff-Lgf	1000	2014	2016	160970008	**100609501**	
Zx 10 B1-B3	1000	1988	1990	16099003	**100609531**	
Gpz E1-E2	1100	1995	1997	16099003	**100609531**	
Zr Zephyr A1-A4	1100	1992	1995	16099003	**100609531**	
Zrx D1-D3	1100	1997	1999	16099003	**100609531**	
Zzr C1-C2	1100	1990	1991	16099003	**100609531**	
Zzr C3	1100	1992	1992	16099003	**100609531**	
Zzr D1-D2	1100	1993	1994	16099003	**100609531**	
Zzr D3-D4	1100	1995	1996	16099003	**100609531**	
Zzr D5-D6	1100	1997	1998	16099003	**100609531**	
Zzr D7	1100	1999	1999	16099003	**100609531**	
Zrx C1P-C2P	1200	2001	2003	16099003	**100609531**	
Zrx C3H	1200	2004	2004	16099003	**100609531**	
Zrx R A1P-A3P	1200	2001	2003	16099003	**100609531**	
Zrx R A4H-A5H	1200	2004	2005	16099003	**100609531**	
Zrx R A6F	1200	2006	2006	16099003	**100609531**	
Zrx S B1P-B3P	1200	2001	2003	16099003	**100609531**	
Zrx S B4H	1200	2004	2004	16099003	**100609531**	
Zzr C1H-C2H	1200	2002	2003	16099003	**100609531**	
Zzr C4H	1200	2005	2005	16099003	**100609531**	
Gtr A8F-A9F	1400	2008	2009	160970004	**100609501**	
Gtr Abs Eff-Egf	1400	2015	2016	160970008	**100609501**	
Gtr Abs Ehf-Ejf	1400	2017	2018	160970008	**100609501**	
Gtr Caf-Cbf-Ccf-Cdf-Cef	1400	2010	2014	160970004	**100609501**	
Zzr A6F-A7F	1400	2006	2007	160970004	**100609501**	
Zzr Abs B6F-B7F	1400	2006	2007	160970004	**100609501**	
Zzr Abs D8F-Dbf	1400	2008	2011	160970004	**100609501**	
Zzr Abs Fcf-Fdf-Fdfa-Fef-Fefb	1400	2012	2014	160970004	**100609501**	
Zzr Abs Fff-Fffa	1400	2015	2015	160970008	**100609501**	
Zzr Abs Hgf-Hhf-Hjf	1400	2016	2018	160970008	**100609501**	
Zzr Abs Jgf-Jhf-Jjf-Jkf	1400	2016	2019	160970008	**100609501**	
Vn Classic D1-D2	1500	1996	1997	160971063	**100609351**	
Vn Classic E1	1500	1998	1998	160971063	**100609351**	
Vn Classic E2	1500	1999	1999	160971063	**100609351**	
Vn Classic Tourer Fi L2H-L4H	1500	2001	2003	160971072	**100609351**	
Vn Classic Tourer G1-G2	1500	1998	1999	160971063	**100609351**	
Vn Classic Tourer L1H	1500	2000	2000	160971063	**100609351**	
Vn Drifter J1	1500	1999	2000	160971063	**100609351**	
Vn Main Streak P1H-P2H	1500	2002	2003	160971072	**100609351**	
Vn Classic A1H-A3H	1600	2003	2005	160971072	**100609351**	
Vn Classic A6F	1600	2006	2006	160971072	**100609351**	
Vn Classic Tourer D1H	1600	2005	2005	160971072	**100609351**	

Modello *Model*	CC	Da *From*	A *To*	OEM	Codice RMS *RMS Code*	Note *Notes*
Vn Classic Tourer D6F	1600	2006	2006	160971072	**100609351**	
Vn Mean Streak B1H-B2H	1600	2004	2005	160971072	**100609351**	
Vn Mean Streak B6F-B7F	1600	2006	2007	160970004	**100609501**	
Vn Classic Abs Faf-Fbf-Fcf-Fdf-Fef	1700	2010	2014	160970004	**100609501**	
Vn Classic E9F	1700	2009	2009	160970004	**100609501**	
Vn Classic Tourer Abs Daf-Def	1700	2010	2014	160970004	**100609501**	
Vn Classic Tourer C9F-C9Fa	1700	2009	2009	160970004	**100609501**	
Vn Voyager Abs B9F-Baf-Bbf-Bcf	1700	2009	2012	160970004	**100609501**	
Vn Voyager Custom Abs Kbf-Kcf-Kdf-Kef	1700	2011	2014	160970004	**100609501**	
Vn Vulcan Nomad Abs Dff-Dgf	1700	2015	2016	160970008	**100609501**	
Vn Vulcan Voyager Abs Bdf-Bef-Bff-Bgf	1700	2013	2016	160970008	**100609501**	
Vn A1H-A2H	2000	2004	2005	160971072	**100609351**	
Vn A6F	2000	2006	2006	160971072	**100609351**	
Vn Classic H8F-H9F-Haf	2000	2008	2010	160970004	**100609501**	
KTM						
Duke 125	125	2011	2012	58038005000	**100609211**	
Duke 125 Abs	125	2013	2017	58038005000	**100609211**	
Rc 125 4T Abs	125	2014	2017	58038005000	**100609211**	
Duke 200	200	2012	2012	58038005000	**100609211**	
Duke 200 Abs	200	2013	2017	58038005000	**100609211**	
Rc 200 4T Abs	200	2014	2017	58038005000	**100609211**	
Exc 250 4T Racing	250	2002	2006	58038005000	**100609211**	
Exc 250 4T Racing	250	2002	2006	59038046000	**100609541**	Filtro secondario | *Secondary filter*
Exc-F 250 4T	250	2007	2010	77038005001	**100609601**	
Exc-F 250 4T Sixdays	250	2009	2010	77038005001	**100609601**	
Exc-F 250 Ie4T	250	2011	2013	77038005001	**100609601**	
Exc-F 250 Ie4T	250	2014	2017	77338005100	**100609591**	
Exc-F 250 Ie4T Sixdays	250	2011	2013	77038005001	**100609601**	
Exc-F 250 Ie4T Sixdays	250	2014	2017	77338005100	**100609591**	
Sx-F 250 4T	250	2006	2010	77038005001	**100609601**	
Sx-F 250 Ie4T	250	2011	2012	77038005001	**100609601**	
Sx-F 250 Ie4T	250	2013	2017	77338005100	**100609591**	
Sx-F 250 Ie4T Factory Edition	250	2017	2017	77338005100	**100609591**	
Egs 350 Lc4	350	1993	1994	58038005000	**100609211**	
Exc 350 Lc4 Competition	350	1993	1994	58038005000	**100609211**	
Exc 350 Lc4 Competition Sixdays	350	1993	1993	58038005000	**100609211**	
Exc-F 350 Ie4T	350	2012	2017	77338005100	**100609591**	
Exc-F 350 Ie4T Sixdays	350	2012	2017	77338005100	**100609591**	
Freeride 350 4T	350	2012	2017	77338005100	**100609591**	
Sc 350 Lc4 Super Competition	350	1994	1995	58038005000	**100609211**	
Sx-F 350 Ie 4T	350	2011	2017	77338005100	**100609591**	
Duke 390 Abs	390	2013	2017	58038005000	**100609211**	
Rc 390 Abs	390	2014	2017	58038005000	**100609211**	
Duke 400	400	1994	1995	58038005000	**100609211**	
Duke 400	400	1994	1995	58338045100	**100609661**	Filtro secondario | *Secondary filter*
Egs 400 Lc4	400	1993	1997	58038005000	**100609211**	
Egs 400 Lc4	400	1995	1997	58338045100	**100609661**	
Egs-E 400 Lc4	400	1997	1997	58038005000	**100609211**	
Egs-E 400 Lc4	400	1997	1997	58338045100	**100609661**	Filtro secondario | *Secondary filter*
Exc 400	400	2009	2011	77338005100	**100609591**	
Exc 400 Lc4 Competition	400	1993	1996	58038005000	**100609211**	
Exc 400 Lc4 Competition	400	1995	1996	58338045100	**100609661**	
Exc 400 Lc4 Competition Sixdays	400	1993	1993	58038005000	**100609211**	
Exc 400 Lc4 Competition Sixdays Winner	400	1997	1997	58038005000	**100609211**	
Exc 400 Lc4 Competition Sixdays Winner	400	1997	1997	58338045100	**100609661**	Filtro secondario | *Secondary filter*
Exc 400 Racing	400	2000	2007	58038005000	**100609211**	
Exc 400 Racing	400	2000	2007	59038046000	**100609541**	Filtro secondario | *Secondary filter*
Lc4 400	400	1998	1998	58038005000	**100609211**	

Modello *Model*	CC	Da *From*	A *To*	OEM	Codice RMS *RMS Code*	Note *Notes*
Lc4 400	400	1998	1998	58338045100	**100609661**	Filtro secondario | *Secondary filter*
Lc4-E 400	400	1998	2001	58038005000	**100609211**	
Lc4-E 400	400	1998	2001	58338045100	**100609661**	Filtro secondario | *Secondary filter*
Lc4-E 400 Lse	400	1997	1998	58038005000	**100609211**	
Lc4-E 400 Lse	400	1997	1998	58338045100	**100609661**	Filtro secondario | *Secondary filter*
Sc 400 Lc4 Super Competition	400	1995	1999	58038005000	**100609211**	
Sx 400 Racing	400	2000	2002	58038005000	**100609211**	
Sx 400 Racing	400	2000	2002	59038046000	**100609541**	Filtro secondario | *Secondary filter*
Sxc 400	400	1997	1998	58038005000	**100609211**	
Sxc 400 Tiainen	400	1999	1999	58038005000	**100609211**	
Exc 450	450	2009	2011	77338005100	**100609591**	
Exc 450 Ie	450	2012	2016	77038005001	**100609601**	
Exc 450 Ie Sixdays	450	2012	2016	77038005001	**100609601**	
Exc 450 R	450	2008	2008	77338005100	**100609591**	
Exc 450 Racing	450	2003	2007	58038005000	**100609211**	
Exc 450 Racing	450	2003	2007	59038046000	**100609541**	Filtro secondario | *Secondary filter*
Exc 450 Sixdays	450	2009	2011	77338005100	**100609591**	
Exc-F 450 Ie	450	2017	2017	77338005100	**100609591**	
Exc-F 450 Ie Sixdays	450	2017	2017	77338005100	**100609591**	
Smr 450 Ie Supermoto	450	2013	2014	77038005001	**100609601**	
Smr 450 Supermoto	450	2005	2007	58038005000	**100609211**	
Smr 450 Supermoto	450	2005	2007	59038046000	**100609541**	Filtro secondario | *Secondary filter*
Smr 450 Supermoto	450	2008	2012	77338005100	**100609591**	
Sx 450 Racing	450	2003	2006	58038005000	**100609211**	
Sx 450 Racing	450	2003	2006	59038046000	**100609541**	Filtro secondario | *Secondary filter*
Sx Quad 450	450	2009	2011	60038015100	**100609671**	
Sx-F 450 Ie	450	2013	2015	77038005001	**100609601**	
Sx-F 450 Ie	450	2016	2017	77338005100	**100609591**	
Sx-F 450 Ie Factory Edition	450	2017	2017	77338005100	**100609591**	
Sx-F 450 Racing	450	2007	2012	77338005100	**100609591**	
Xc Quad 450	450	2009	2009	58038005000	**100609211**	
Xc Quad 450	450	2009	2009	59038046000	**100609541**	Filtro secondario | *Secondary filter*
E-Gs 500 Lc4	500	1989	1989	58038005000	**100609211**	
Exc 500 Ie	500	2012	2016	77038005001	**100609601**	
Exc 500 Ie Sixdays	500	2012	2016	77038005001	**100609601**	
E-Xc 500 Lc4	500	1989	1989	58038005000	**100609211**	
Exc-F 500 Ie	500	2017	2017	77338005100	**100609591**	
Exc-F 500 Ie Sixdays	500	2017	2017	77338005100	**100609591**	
Incas 500 Lc4	500	1989	1989	58038005000	**100609211**	
Sx Quad 505	505	2009	2013	60038015100	**100609671**	
Sx-F 505 Racing	505	2007	2008	77338005100	**100609591**	
Exc 520 Racing	520	2000	2002	58038005000	**100609211**	
Exc 520 Racing	520	2000	2002	59038046000	**100609541**	Filtro secondario | *Secondary filter*
Sx 520 Racing	520	2000	2002	58038005000	**100609211**	
Sx 520 Racing	520	2000	2002	59038046000	**100609541**	Filtro secondario | *Secondary filter*
Exc 525 Racing	525	2003	2007	58038005000	**100609211**	
Exc 525 Racing	525	2003	2007	59038046000	**100609541**	Filtro secondario | *Secondary filter*
Mxc 525 Desert Racing	525	2003	2005	58038005000	**100609211**	
Mxc 525 Desert Racing	525	2003	2005	59038046000	**100609541**	Filtro secondario | *Secondary filter*
Smr 525 Supermoto	525	2004	2005	58038005000	**100609211**	
Smr 525 Supermoto	525	2004	2005	59038046000	**100609541**	Filtro secondario | *Secondary filter*
Sx 525 Racing	525	2003	2006	58038005000	**100609211**	
Sx 525 Racing	525	2003	2006	59038046000	**100609541**	Filtro secondario | *Secondary filter*
Xc 525 Desert Racing	525	2006	2007	58038005000	**100609211**	
Xc 525 Desert Racing	525	2006	2007	59038046000	**100609541**	Filtro secondario | *Secondary filter*
Xc Quad 525	525	2009	2013	58038005000	**100609211**	
Xc Quad 525	525	2009	2013	59038046000	**100609541**	Filtro secondario | *Secondary filter*
Exc 530	530	2009	2011	77338005100	**100609591**	

Modello *Model*	CC	Da *From*	A *To*	OEM	Codice RMS *RMS Code*	Note *Notes*
Exc 530 R	530	2008	2008	77338005100	**100609591**	
Exc 530 Sixdays	530	2009	2011	77338005100	**100609591**	
Sxc 540	540	1998	1998	58038005000	**100609211**	
Sxc 540 Tiainen	540	1999	1999	58038005000	**100609211**	
Smr 560 Supermoto	560	2006	2007	58038005000	**100609211**	
Smr 560 Supermoto	560	2006	2007	59038046000	**100609541**	Filtro secondario | *Secondary filter*
E-Gs 600 Lc4	600	1993	1993	58038005000	**100609211**	
Exc 600 Lc4 Competition	600	1993	1993	58038005000	**100609211**	
Exc 600 Lc4 Competition Sixdays	600	1993	1993	58038005000	**100609211**	
Exc 612 Lc4 Competition	612	1993	1993	58038005000	**100609211**	
Exc 612 Lc4 Competition Sixdays	612	1993	1993	58038005000	**100609211**	
Duke 620	620	1994	1995	58038005000	**100609211**	
Duke 620	620	1994	1995	58338045100	**100609661**	Filtro secondario | *Secondary filter*
Duke 620 E	620	1996	1998	58038005000	**100609211**	
Duke 620 E	620	1996	1998	58338045100	**100609661**	Filtro secondario | *Secondary filter*
Egs 620 Lc4	620	1994	1998	58038005000	**100609211**	
Egs 620 Lc4	620	1995	1998	58338045100	**100609661**	
Egs 620 Lc4 Dakar	620	1995	1995	58038005000	**100609211**	
Egs 620 Lc4 Dakar	620	1995	1995	58338045100	**100609661**	Filtro secondario | *Secondary filter*
Egs 620 Lc4 Lse	620	1997	1998	58038005000	**100609211**	
Egs 620 Lc4 Lse	620	1997	1998	58338045100	**100609661**	Filtro secondario | *Secondary filter*
Egs 620 Lc4 Supermoto	620	1998	1998	58038005000	**100609211**	
Egs 620 Lc4 Supermoto	620	1998	1998	58338045100	**100609661**	Filtro secondario | *Secondary filter*
Egs 620 Lc4-E	620	1997	1998	58038005000	**100609211**	
Egs 620 Lc4-E	620	1997	1998	58338045100	**100609661**	Filtro secondario | *Secondary filter*
Egs 620 Lc4-E Adventure	620	1997	1998	58038005000	**100609211**	
Egs 620 Lc4-E Adventure	620	1997	1998	58338045100	**100609661**	Filtro secondario | *Secondary filter*
Exc 620 Lc4 Competition	620	1994	1996	58038005000	**100609211**	
Exc 620 Lc4 Competition	620	1995	1996	58338045100	**100609661**	
Exc 620 Lc4 Competition	620	1998	1999	58038005000	**100609211**	
Exc 620 Lc4 Competition	620	1998	1999	58338045100	**100609661**	Filtro secondario | *Secondary filter*
Exc 620 Lc4 Competition Sixdays Winner	620	1996	1998	58038005000	**100609211**	
Exc 620 Lc4 Competition Sixdays Winner	620	1996	1998	58338045100	**100609661**	Filtro secondario | *Secondary filter*
Exc 620 Lc4 Dakar Competition	620	1995	1995	58038005000	**100609211**	
Exc 620 Lc4 Dakar Competition	620	1995	1995	58338045100	**100609661**	Filtro secondario | *Secondary filter*
Exc 620 Lc4 Pharaonen Rally	620	1994	1994	58038005000	**100609211**	
Exc 620 Lc4 Rally	620	1997	1997	58038005000	**100609211**	
Sc 620 Lc4 Super Competition	620	1994	2001	58038005000	**100609211**	
Sc 620 Lc4 Supermoto	620	2000	2001	58038005000	**100609211**	
Sx 620 Lc4	620	1994	1999	58038005000	**100609211**	
Sxc 620 Lc4	620	1997	1997	58038005000	**100609211**	
Sc 625 Lc4 Super Competition	625	2002	2002	58038005000	**100609211**	
Sc 625 Lc4 Super Competition	625	2002	2002	59038046000	**100609541**	Filtro secondario | *Secondary filter*
Sc 625 Lc4 Super Competition Supermoto	625	2002	2002	58038005000	**100609211**	
Sc 625 Lc4 Super Competition Supermoto	625	2002	2002	59038046000	**100609541**	Filtro secondario | *Secondary filter*
Smc 625 Supermoto	625	2004	2006	58038005000	**100609211**	
Smc 625 Supermoto	625	2004	2006	58338045100	**100609661**	Filtro secondario | *Secondary filter*
Sxc 625	625	2003	2004	59038046000	**100609541**	Filtro secondario | *Secondary filter*
Sxc 625	625	2003	2006	58038005000	**100609211**	
Sxc 625	625	2005	2006	58338045100	**100609661**	Filtro secondario | *Secondary filter*
Adventure 640 Lc4	640	2001	2007	58038005000	**100609211**	
Adventure 640 Lc4	640	2001	2007	58338045100	**100609661**	Filtro secondario | *Secondary filter*
Adventure 640 R	640	1999	2000	58038005000	**100609211**	
Adventure 640 R	640	1999	2000	58338045100	**100609661**	Filtro secondario | *Secondary filter*
Duke Ii 640 E	640	1999	2007	58038005000	**100609211**	
Duke Ii 640 E	640	1999	2007	58338045100	**100609661**	Filtro secondario | *Secondary filter*
Exc 640 Lc4 Rally	640	1997	1997	58038005000	**100609211**	
Exc 640 Lc4 Rally	640	1997	1997	58338045100	**100609661**	Filtro secondario | *Secondary filter*

Modello *Model*	CC	Da *From*	A *To*	OEM	Codice RMS *RMS Code*	Note *Notes*
Lc4-E 640	640	1998	2006	58038005000	**100609211**	
Lc4-E 640	640	1998	2006	58338045100	**100609661**	Filtro secondario | *Secondary filter*
Lc4-E 640 Supermoto	640	1999	2006	58038005000	**100609211**	
Lc4-E 640 Supermoto	640	1999	2006	58338045100	**100609661**	Filtro secondario | *Secondary filter*
Exc 660 Lc4 Rally	660	1996	1997	58038005000	**100609211**	
Exc 660 Lc4 Rally	660	1996	1997	58338045100	**100609661**	Filtro secondario | *Secondary filter*
Exc 660 Lc4 Rally	660	1999	1999	58038005000	**100609211**	
Exc 660 Lc4 Rally	660	1999	1999	58338045100	**100609661**	Filtro secondario | *Secondary filter*
Smc 660 Supermoto	660	2003	2003	59038046000	**100609541**	Filtro secondario | *Secondary filter*
Smc 660 Supermoto	660	2003	2006	58038005000	**100609211**	
Smc 660 Supermoto	660	2004	2006	58338045100	**100609661**	Filtro secondario | *Secondary filter*
Duke 690	690	2008	2011	58038005000	**100609211**	
Duke 690	690	2008	2011	59038046000	**100609541**	Filtro secondario | *Secondary filter*
Duke 690 Abs	690	2012	2017	58038005000	**100609211**	
Duke 690 R	690	2010	2012	58038005000	**100609211**	
Duke 690 R	690	2010	2012	59038046000	**100609541**	Filtro secondario | *Secondary filter*
Duke 690 R Abs	690	2013	2017	58038005000	**100609211**	
Enduro 690	690	2008	2010	58038005000	**100609211**	
Enduro 690	690	2008	2010	59038046000	**100609541**	Filtro secondario | *Secondary filter*
Enduro 690 R	690	2009	2011	59038046000	**100609541**	Filtro secondario | *Secondary filter*
Enduro 690 R	690	2009	2015	58038005000	**100609211**	
Enduro 690 R Abs	690	2016	2017	58038005000	**100609211**	
Rally Factory Replica 690	690	2009	2010	58038005000	**100609211**	
Smc 690 R Supermoto	690	2012	2013	58038005000	**100609211**	
Smc 690 R Supermoto Abs	690	2014	2017	58038005000	**100609211**	
Smc 690 Supermoto	690	2008	2011	58038005000	**100609211**	
Smc 690 Supermoto	690	2008	2011	59038046000	**100609541**	Filtro secondario | *Secondary filter*
Supermoto 690	690	2007	2009	58038005000	**100609211**	
Supermoto 690	690	2007	2009	59038046000	**100609541**	Filtro secondario | *Secondary filter*
Supermoto 690 Prestige	690	2007	2007	58038005000	**100609211**	
Supermoto 690 Prestige	690	2007	2007	59038046000	**100609541**	Filtro secondario | *Secondary filter*
Supermoto 690 R	690	2008	2010	58038005000	**100609211**	
Supermoto 690 R	690	2008	2010	59038046000	**100609541**	Filtro secondario | *Secondary filter*
Adventure 950 Lc8	950	2003	2005	60038015100	**100609671**	
Adventure 950 S Lc8	950	2003	2005	60038015100	**100609671**	
Super Enduro 950 R Lc8	950	2006	2008	60038015100	**100609671**	
Supermoto 950 Lc8	950	2006	2008	60038015100	**100609671**	
Supermoto 950 R Lc8	950	2007	2008	60038015100	**100609671**	
Adventure 990 Lc8	990	2006	2007	60038015100	**100609671**	
Adventure 990 Lc8 Abs	990	2006	2013	60038015100	**100609671**	
Adventure 990 R Lc8	990	2009	2013	60038015100	**100609671**	
Adventure 990 S Lc8	990	2006	2008	60038015100	**100609671**	
Super Duke 990 Lc8	990	2005	2011	60038015100	**100609671**	
Super Duke 990 R Lc8	990	2007	2013	60038015100	**100609671**	
Supermoto 990 Lc8	990	2009	2010	60038015100	**100609671**	
Supermoto 990 Sm R Lc8	990	2009	2011	60038015100	**100609671**	
Supermoto 990 Sm R Lc8 Abs	990	2012	2013	60038015100	**100609671**	
Supermoto 990 Sm T Lc8	990	2009	2011	60038015100	**100609671**	
Supermoto 990 Sm T Lc8 Abs	990	2011	2013	60038015100	**100609671**	
Adventure 1050 Abs	1050	2015	2016	60038015100	**100609671**	
Adventure 1190 Abs	1190	2013	2016	60038015100	**100609671**	
Adventure 1190 R Abs	1190	2013	2016	60038015100	**100609671**	
Rc8 1190	1190	2008	2011	60038015100	**100609671**	
Rc8 1190 R	1190	2009	2015	60038015100	**100609671**	
Rc8 1190 R Red Bull	1190	2011	2011	60038015100	**100609671**	
Rc8 1190 R Track	1190	2011	2013	60038015100	**100609671**	
Super Adventure 1290 Abs	1290	2015	2016	60038015100	**100609671**	
Super Duke 1290 Gt Abs	1290	2016	2016	60038015100	**100609671**	

Modello *Model*	CC	Da *From*	A *To*	OEM	Codice RMS *RMS Code*	Note *Notes*
Super Duke 1290 R Abs	1290	2014	2016	60038015100	**100609671**	
Super Duke 1290 R Special Edition Abs	1290	2016	2016	60038015100	**100609671**	
KYMCO						
Dink 125 Euro3	125	2006	2007	00124759	**100609370**	
Downtown 125I	125	2009	2016	00115058	**100609480**	
Downtown E4	125	2016	2016	00115058	**100609480**	
G-Dink	125	2012	2012	00124759	**100609370**	
Grand Dink 125-150	125	2001	2002	00124759	**100609370**	
Grand Dink 125-150 Euro2	125	2003	2004	00124759	**100609370**	
K-Xct I	125	2012	2014	00115058	**100609480**	
People Gti	125	2010	2014	00115058	**100609480**	
X-Town Cbs	125	2016	2016	00115058	**100609480**	
Grand Dink 125-150	150	2001	2002	00124759	**100609370**	
Grand Dink 125-150 Euro2	150	2003	2004	00124759	**100609370**	
Dink Euro3I	200	2006	2007	00124759	**100609370**	
Downtown I	200	2010	2010	00115058	**100609480**	
People Gti	200	2010	2014	00115058	**100609480**	
Downtown 300I	300	2009	2009	00115058	**100609480**	
Downtown Abs	300	2010	2010	00115058	**100609480**	
Downtown Abs I	300	2011	2016	00115058	**100609480**	
Downtown I	300	2011	2011	00115058	**100609480**	
K-Xct I	300	2012	2012	00115058	**100609480**	
K-Xct I Abs	300	2014	2014	00115058	**100609480**	
People Gti	300	2010	2014	00115058	**100609480**	
People Gti Abs	300	2012	2014	00115058	**100609480**	
People Gti Abs E4	300	2016	2016	00115058	**100609480**	
Downtown Abs E4	350	2016	2016	00115058	**100609480**	
Downtown I Abs	350	2015	2015	00115058	**100609480**	
Mxu	400	2008	2008	00115041	**100609511**	
X Citing I	400	2013	2015	00115103	**100609880**	
X Citing I Abs	400	2014	2015	00115103	**100609880**	
X Citing I Abs E4	400	2016	2016	00115103	**100609880**	
Maxxer I	450	2010	2010	00115041	**100609511**	
Mxu	500	2005	2006	00128045	**100609081**	
Mxu Irs	500	2010	2010	00128045	**100609081**	
Uxv	500	2008	2008	00128045	**100609081**	
Uxv I	500	2010	2010	00128045	**100609081**	
X Citing	500	2005	2005	00128045	**100609081**	
X Citing 500 R	500	2009	2009	00128045	**100609081**	
X Citing 500I	500	2006	2008	00128045	**100609081**	
X Citing 500I R	500	2007	2008	00128045	**100609081**	
Mxu 700I	700	2013	2013	00128045	**100609081**	
Myroad I	700	2011	2011	00128045	**100609081**	
LML						
Star 125 4T	125	2012	2017	-	**100609470**	
Star 125 4T Automatica	125	2013	2017	-	**100609470**	
Star 150 4T	150	2012	2012	-	**100609470**	
Star 151 4T	151	2012	2012	-	**100609470**	
MALAGUTI						
Madison 3	125	2006	2009	46400200	**100609041**	
Madison R	180	2001	2002	46400200	**100609041**	
Madison S Restyling	200	2002	2002	46400200	**100609041**	
Madison S Restyling Euro2	200	2003	2003	46400200	**100609041**	
Phantom Max	200	2003	2003	46400200	**100609041**	
Madison 3	250	2006	2009	46400200	**100609041**	
Madison Rs Restyling	250	2004	2004	46400200	**100609041**	
Phantom Max	250	2004	2004	46400200	**100609041**	

Modello *Model*	CC	Da *From*	A *To*	OEM	Codice RMS *RMS Code*	Note *Notes*
MICRO-CAR						
Tutte (Motore Lombardini Ldw502)	505	-	-	-	**100609140**	
MOTO GUZZI						
Nevada 350 Club	350	1998	1999	GU27153085	**100609180**	
Nevada 350 Nuovo Tipo Lg12001>	350	1993	1997	GU27153085	**100609180**	
Nevada 350 Vecchio Tipo	350	1992	1993	GU27153085	**100609180**	
Ntx	350	1986	1990	GU19153000	**100609420**	
V35 Carabinieri-Pa <Pd30076	350	1990	1991	GU27153085	**100609180**	
V35 Carabinieri-Pa Pd30077>	350	1992	2001	GU27153085	**100609180**	Altezza 104,5 mm | *Height 104,5 mm*
V35 Carabinieri-Pa Pd30077>	350	1992	2001	GU19153000	**100609420**	Altezza 89 mm | *Height 89 mm*
V35 Florida	350	1986	1990	GU19153000	**100609420**	
V35 III	350	1980	1985	GU19153000	**100609420**	
V35 III	350	1985	1987	GU27153085	**100609180**	Altezza 104,5 mm | *Height 104,5 mm*
V35 III	350	1985	1987	GU19153000	**100609420**	Altezza 89 mm | *Height 89 mm*
V35C-V50C	350	1982	1986	GU19153000	**100609420**	
V35-V50 Accensione Elettronica	350	1977	1979	GU19153000	**100609420**	
V50 III	500	1980	1984	GU19153000	**100609420**	
V50 III Polizia-Pa Vecchio Tipo	500	1982	1990	GU19153000	**100609420**	
V50 Pa	500	1992	2001	GU27153085	**100609180**	Altezza 104,5 mm | *Height 104,5 mm*
V50 Pa	500	1992	2001	GU19153000	**100609420**	Altezza 89 mm | *Height 89 mm*
65 Gt	650	1988	1989	GU19153000	**100609420**	
Ntx	650	1986	1990	GU19153000	**100609420**	
V65 Custom	650	1983	1986	GU19153000	**100609420**	
V65 Florida	650	1985	1992	GU27153085	**100609180**	Altezza 104,5 mm | *Height 104,5 mm*
V65 Florida	650	1985	1992	GU19153000	**100609420**	Altezza 89 mm | *Height 89 mm*
V65 Polizia-Pa Nuovo Tipo	650	1988	1995	GU27153085	**100609180**	Altezza 104,5 mm | *Height 104,5 mm*
V65 Polizia-Pa Nuovo Tipo	650	1988	1995	GU19153000	**100609420**	Altezza 89 mm | *Height 89 mm*
750 Sp	750	1990	1992	GU27153085	**100609180**	
750 X Polizia-Pa 1A Serie <Lx15449	750	1992	1994	GU27153085	**100609180**	
750 X Polizia-Pa 2A Serie Lx15450>	750	1995	2002	GU27153085	**100609180**	
Breva Std - Pubblica Amministrazione	750	2003	2009	GU27153085	**100609180**	
Nevada	750	2002	2003	GU27153085	**100609180**	
Nevada Classic	750	2004	2008	GU27153085	**100609180**	
Nevada Classic - Aquila Nera	750	2009	2013	GU27153085	**100609180**	
Nevada Club	750	1998	2001	GU27153085	**100609180**	
Nevada Nuovo Tipo Lf13000>	750	1993	1997	GU27153085	**100609180**	
Nevada S	750	2010	2010	GU27153085	**100609180**	
Nevada S Anniversario	750	2012	2012	GU27153085	**100609180**	
Nevada Vecchio Tipo <Lf12999	750	1991	1993	GU27153085	**100609180**	
Strada	750	1993	1995	GU27153085	**100609180**	
Targa	750	1990	1992	GU27153085	**100609180**	
V7 Cafe' Classic	750	2009	2009	GU27153085	**100609180**	
V7 Classic	750	2008	2012	GU27153085	**100609180**	
V7 II Racer Abs	750	2015	2016	GU27153085	**100609180**	
V7 II Special Abs	750	2015	2016	GU27153085	**100609180**	
V7 II Stone Abs	750	2015	2016	GU27153085	**100609180**	
V7 II Stornello Abs	750	2016	2016	GU27153085	**100609180**	
V7 Racer	750	2010	2014	GU27153085	**100609180**	
V7 Special	750	2014	2014	GU27153085	**100609180**	
V7 Special - Stone	750	2012	2013	GU27153085	**100609180**	
V7 Stone	750	2014	2014	GU27153085	**100609180**	
V75 Pa Nuovo Tipo	750	1996	2001	GU27153085	**100609180**	
V75 Pa Vecchio Tipo	750	1992	1996	GU27153085	**100609180**	
850 T5 Polizia-Cc-Pa (Nc) <Vr36415	850	1988	1993	GU30153000	**100609151**	
850 T5 Polizia-Cc-Pa (Nc) Vr40001>	850	1995	2001	GU30153000	**100609151**	
850 T5 Polizia-Cc-Pa. Nc Vr36416-40000	850	1994	1995	GU30153000	**100609151**	
Breva	850	2006	2007	GU30153000	**100609151**	
Griso	850	2006	2007	GU30153000	**100609151**	

Modello *Model*	CC	Da *From*	A *To*	OEM	Codice RMS *RMS Code*	Note *Notes*
Norge	850	2007	2007	GU30153000	**100609151**	
Bellagio - Aquila Nera	940	2007	2013	GU30153000	**100609151**	
Daytona Racing	1000	1996	1996	GU30153000	**100609151**	
Daytona Rs	1000	1997	1998	GU30153000	**100609151**	
Mgs-01 Corsa	1000	2004	2007	GU30153000	**100609151**	
Quota	1000	1992	1997	GU30153000	**100609151**	
V10 Centauro	1000	1997	1999	GU30153000	**100609151**	
Breva	1100	2005	2007	GU30153000	**100609151**	
California	1100	1994	1997	GU30153000	**100609151**	
California Aluminium - Titanium	1100	2003	2004	GU30153000	**100609151**	
California Aquila Nera	1100	2009	2011	GU30153000	**100609151**	
California Classic - Touring	1100	2006	2008	GU30153000	**100609151**	
California Ev	1100	2001	2002	GU30153000	**100609151**	
California Ev - Ev Touring	1100	2003	2005	GU30153000	**100609151**	
California Ev (V11 Ev Usa)	1100	1997	2000	GU30153000	**100609151**	
California Ev P.I.	1100	2002	2002	GU30153000	**100609151**	
California Jackal	1100	1999	2001	GU30153000	**100609151**	
California Special	1100	1999	2000	GU30153000	**100609151**	
California Special Sport - Aluminium	1100	2002	2003	GU30153000	**100609151**	
California Sport	1100	2001	2002	GU30153000	**100609151**	
California Stone	1100	2001	2005	GU30153000	**100609151**	
California Stone - Metal	1100	2002	2003	GU30153000	**100609151**	
California Vintage	1100	2006	2012	GU30153000	**100609151**	
Griso	1100	2005	2008	GU30153000	**100609151**	
Quota 1100 Es	1100	1999	2001	GU30153000	**100609151**	
Sport 1100 Carburatori	1100	1994	1996	GU30153000	**100609151**	
Sport 1100 Iniezione	1100	1996	1999	GU30153000	**100609151**	
Sport Corsa	1100	1998	1999	GU30153000	**100609151**	
V11 Le Mans	1100	2001	2002	GU30153000	**100609151**	
V11 Sport	1100	1999	2001	GU30153000	**100609151**	
Breva	1200	2007	2007	GU30153000	**100609151**	
Griso 8V - 8V Special Edition	1200	2007	2013	GU30153000	**100609151**	
Norge	1200	2006	2008	GU30153000	**100609151**	
Norge 8V Polizia Stradale	1200	2014	2014	GU30153000	**100609151**	
Norge Gt 8V - Polizia	1200	2010	2016	GU30153000	**100609151**	
Sport	1200	2006	2007	GU30153000	**100609151**	
Sport 8V	1200	2008	2013	GU30153000	**100609151**	
Stelvio	1200	2008	2008	GU30153000	**100609151**	
Stelvio 8V Std - Ntx	1200	2011	2017	GU30153000	**100609151**	
Stelvio Std - Ntx	1200	2009	2010	GU30153000	**100609151**	
MV AGUSTA						
Brutale	750	2003	2005	8000A3702	**100609791**	
F4	750	2001	2003	8000A3702	**100609791**	
Brutale	910	2005	2008	8000A3702	**100609791**	
Brutale 989R-1078Rr	989	2008	2008	8000B1552	**100609791**	
F4	1000	2004	2006	8000A3702	**100609791**	
F4 1000 312R-1078 312Rr	1000	2007	2008	8000A3702	**100609791**	
F4 R	1000	2006	2007	8000A3702	**100609791**	
F4 Veltro	1000	2008	2008	8000A3702	**100609791**	
Brutale 989R-1078Rr	1078	2008	2008	8000B1552	**100609791**	
F4 100Cc	1078	2007	2007	8000A3702	**100609791**	
PEUGEOT						
Citystar 125	125	2012	2012	737492	**100609021**	
Citystar 125 Active	125	2013	2014	737492	**100609021**	
Citystar 125 Rs	125	2013	2016	737492	**100609021**	
Elyseo 125 Dd	125	2001	2003	737492	**100609021**	
Elyseo 125 Dt	125	1998	2000	737492	**100609021**	
Elyseo 125 Dt Advantage	125	2004	2004	737492	**100609021**	

Modello *Model*	CC	Da *From*	A *To*	OEM	Codice RMS *RMS Code*	Note *Notes*
Elystar 125 Advantage	125	2004	2007	737492	**100609021**	
Elystar 125 I Abs	125	2003	2007	737492	**100609021**	
Geopolis 125 Executive Abs	125	2007	2011	737492	**100609021**	
Geopolis 125 Premium	125	2007	2012	737492	**100609021**	
Geopolis 125 Premium Rs	125	2007	2012	737492	**100609021**	
Geopolis 125 Urban Abs	125	2008	2012	737492	**100609021**	
Jet Force 125	125	2003	2007	737492	**100609021**	
Jet Force 125 Abs	125	2003	2007	737492	**100609021**	
Jet Force 125 K15 Compressor	125	2005	2007	737492	**100609021**	
Jet Force 125 K20 Compressor	125	2005	2007	737492	**100609021**	
Looxor 125	125	2003	2006	756162	**100609041**	
Satelis 125 2 Blue Line	125	2015	2016	737492	**100609021**	
Satelis 125 2 Executive Abs	125	2013	2014	737492	**100609021**	
Satelis 125 2 Premium	125	2014	2016	737492	**100609021**	
Satelis 125 2 Premium Rs	125	2013	2016	737492	**100609021**	
Satelis 125 2 Urban Abs	125	2013	2016	737492	**100609021**	
Satelis 125 2 Urban Rs Abs	125	2013	2016	737492	**100609021**	
Satelis 125 Avenue	125	2008	2009	737492	**100609021**	
Satelis 125 Executive Abs	125	2007	2013	737492	**100609021**	
Satelis 125 K15 Compressor Executive Abs	125	2008	2012	737492	**100609021**	
Satelis 125 K15 Compressor Executive Black Sat Abs	125	2008	2012	737492	**100609021**	
Satelis 125 K15 Compressor Premium	125	2007	2012	737492	**100609021**	
Satelis 125 K15 Compressor Premium Black Sat	125	2008	2012	737492	**100609021**	
Satelis 125 K15 Compressor White Sat	125	2011	2012	737492	**100609021**	
Satelis 125 K15 Compressor White Sat Abs	125	2011	2012	737492	**100609021**	
Satelis 125 K20 Compressor Executive Abs	125	2008	2009	737492	**100609021**	
Satelis 125 K20 Compressor Premium	125	2007	2009	737492	**100609021**	
Satelis 125 Premium	125	2006	2013	737492	**100609021**	
Satelis 125 Premium Rs	125	2008	2013	737492	**100609021**	
Satelis 125 Premium Rs Abs	125	2010	2012	737492	**100609021**	
Satelis 125 Urban Abs	125	2008	2013	737492	**100609021**	
Elyseo 150	150	2001	2003	737492	**100609021**	
Elystar 150	150	2004	2006	737492	**100609021**	
Citystar 200	200	2012	2016	737492	**100609021**	
Citystar 200 Abs Sbc	200	2017	2017	737492	**100609021**	
Geopolis 250 Executive Abs	250	2007	2009	756162	**100609041**	
Geopolis 250 Premium	250	2006	2011	756162	**100609041**	
Geopolis 250 Premium Rs	250	2007	2011	756162	**100609041**	
Geopolis 250 Urban Abs	250	2010	2012	756162	**100609041**	
Satelis 250 Executive Abs	250	2007	2009	756162	**100609041**	
Satelis 250 Premium	250	2006	2011	756162	**100609041**	
Satelis 250 Premium Rs	250	2008	2011	756162	**100609041**	
Satelis 250 Urban Abs	250	2010	2012	756162	**100609041**	
Geopolis 300 Geostyle	300	2011	2012	756162	**100609041**	
Geopolis 300 Premium	300	2011	2014	756162	**100609041**	
Geopolis 300 Premium Rs	300	2011	2014	756162	**100609041**	
Satelis 2 300	300	2013	2016	756162	**100609041**	
Geopolis 400 Executive Abs	400	2007	2009	759749	**100609071**	
Geopolis 400 Premium	400	2007	2012	759749	**100609071**	
Geopolis 400 Premium Rs	400	2008	2011	759749	**100609071**	
Geopolis 400 Urban Abs	400	2010	2012	759749	**100609071**	
Metropolis 400 Ie	400	2013	2017	778117	**100609751**	
Metropolis 400 Ie Black Edition	400	2016	2016	778117	**100609751**	
Metropolis 400 Ie Blue Line	400	2015	2016	778117	**100609751**	
Metropolis 400 Ie Gt Connect	400	2015	2015	778117	**100609751**	
Metropolis 400 Ie Sport	400	2015	2015	778117	**100609751**	
Metropolis 400 Rs Ie	400	2014	2017	778117	**100609751**	
Satelis 2 400 Ie Premium	400	2014	2017	778117	**100609751**	

Modello *Model*	CC	Da *From*	A *To*	OEM	Codice RMS *RMS Code*	Note *Notes*
Satelis 2 400 Ie Rs Premium	400	2014	2017	778117	**100609751**	
Satelis 400 Executive Abs	400	2007	2009	759749	**100609071**	
Satelis 400 Premium	400	2007	2012	759749	**100609071**	
Satelis 400 Premium Rs	400	2008	2011	759749	**100609071**	
Satelis 400 Urban Abs	400	2010	2011	759749	**100609071**	
Geopolis 500 Premium	500	2008	2012	759749	**100609071**	
Satelis 500 Executive Abs	500	2007	2009	759749	**100609071**	
Satelis 500 Premium	500	2006	2012	759749	**100609071**	
Satelis 500 Premium Rs	500	2008	2011	759749	**100609071**	
Satelis 500 Urban Abs	500	2010	2011	759749	**100609071**	
PIAGGIO						
Beverly	125	2001	2003	82635R	**100609041**	
Beverly Euro 3	125	2007	2008	82635R	**100609041**	
Beverly Euro 3 Mic	125	2007	2007	82635R	**100609041**	
Beverly Euro 3 Sport	125	2007	2008	82635R	**100609041**	
Beverly Rst	125	2004	2007	82635R	**100609041**	
Beverly Rst 4T 4V Ie Euro3	125	2010	2015	82635R	**100609041**	
Beverly Tourer Euro3	125	2007	2010	82635R	**100609041**	
Carnaby	125	2007	2010	82635R	**100609041**	
Fly	125	2005	2007	82635R	**100609041**	
Fly 4T 3V Ie E3 Dt	125	2013	2015	82635R	**100609041**	
Fly 4T 3V Ie Euro3 Lem	125	2012	2013	82635R	**100609041**	
Fly Euro3	125	2007	2011	82635R	**100609041**	
Hexagon Gtx	125	2000	2000	82635R	**100609041**	
Hexagon Lx4	125	1998	1999	410229	**100609031**	
Liberty	125	1998	2000	410229	**100609031**	
Liberty	125	2001	2002	82635R	**100609041**	
Liberty 4T	125	2006	2007	82635R	**100609041**	
Liberty 4T 2V Euro3	125	2009	2012	82635R	**100609041**	
Liberty 4T 2V Ie Ptt - Ita	125	2012	2013	82635R	**100609041**	
Liberty 4T 3V Ie E3	125	2013	2014	82635R	**100609041**	
Liberty 4T Euro3	125	2006	2008	82635R	**100609041**	
Liberty 4T Euro3 Delivery - Single	125	2007	2015	82635R	**100609041**	
Liberty 4T Euro3 Delivery - Tnt - Nexive	125	2008	2015	82635R	**100609041**	
Liberty 4T Sport Euro3	125	2006	2008	82635R	**100609041**	
Liberty Iget 4T 3V Ie	125	2015	2016	82635R	**100609041**	
Liberty Rst	125	2004	2005	82635R	**100609041**	
Liberty Rst Ptt	125	2005	2011	82635R	**100609041**	
Liberty Sport	125	2006	2006	82635R	**100609041**	
Medley 4T Ie Abs	125	2016	2016	82635R	**100609041**	
Mp3	125	2006	2008	82635R	**100609041**	
Mp3 Ibrido	125	2009	2010	82635R	**100609041**	
Mp3 Ie	125	2008	2009	82635R	**100609041**	
Mp3 Ie Touring	125	2011	2012	82635R	**100609041**	
Mp3 Yourban Erl	125	2011	2013	82635R	**100609041**	
Sfera	125	1995	1997	410229	**100609031**	
Skipper 4T	125	2000	2002	82635R	**100609041**	
Super Hexagon Gtx 12	125	2001	2002	82635R	**100609041**	
Typhoon 4T 2V Euro3	125	2010	2011	82635R	**100609041**	
Vespa 946 4T 3V Abs	125	2013	2015	82635R	**100609041**	
Vespa 946 4T 3V Abs Armani	125	2015	2015	82635R	**100609041**	
Vespa Et4	125	1996	1998	410229	**100609031**	
Vespa Et4	125	1999	2002	82635R	**100609041**	
Vespa Granturismo	125	2003	2007	82635R	**100609041**	
Vespa Granturismo Euro 3	125	2006	2007	82635R	**100609041**	
Vespa Gts 4T Ie Super	125	2009	2016	82635R	**100609041**	
Vespa Gts Euro3	125	2007	2012	82635R	**100609041**	
Vespa Gts Ie Abs E4	125	2016	2016	82635R	**100609041**	

Modello *Model*	CC	Da *From*	A *To*	OEM	Codice RMS *RMS Code*	Note *Notes*
Vespa Gtv	125	2006	2008	82635R	**100609041**	
Vespa Gtv 4T Navy Euro3	125	2008	2008	82635R	**100609041**	
Vespa Lx	125	2005	2006	82635R	**100609041**	
Vespa Lx 4T 3V Ie - Touring	125	2012	2013	82635R	**100609041**	
Vespa Lx 4T Euro3 Touring	125	2010	2011	82635R	**100609041**	
Vespa Lx 4T FI	125	2009	2009	82635R	**100609041**	
Vespa Lx Euro 3	125	2006	2008	82635R	**100609041**	
Vespa Lx Euro 3 Ie	125	2009	2011	82635R	**100609041**	
Vespa Lx Primavera 4T 3V Ie	125	2013	2016	82635R	**100609041**	
Vespa Lxv 4T Euro3	125	2006	2009	82635R	**100609041**	
Vespa Lxv 4T Navy Euro3	125	2007	2008	82635R	**100609041**	
Vespa Lxv Ie 4T	125	2010	2013	82635R	**100609041**	
Vespa Primavera 4T 3V Iget Abs	125	2016	2016	82635R	**100609041**	
Vespa S 4T 3V Ie	125	2012	2012	82635R	**100609041**	
Vespa S 4T Euro 3	125	2007	2008	82635R	**100609041**	
Vespa S 4T Ie & College	125	2009	2011	82635R	**100609041**	
Vespa Sprint 4T 3V Ie	125	2014	2015	82635R	**100609041**	
Vespa Sprint Iget 4T 3V Abs	125	2016	2017	82635R	**100609041**	
X Evo	125	2007	2016	82635R	**100609041**	
X10 4T 4V Ie Euro3	125	2012	2015	82635R	**100609041**	
X7 Evo Ie Euro 3	125	2009	2010	82635R	**100609041**	
X8	125	2004	2006	82635R	**100609041**	
X8 Premium Euro 2	125	2006	2006	82635R	**100609041**	
X8 Premium Euro 3	125	2006	2007	82635R	**100609041**	
X8 Street Euro 2	125	2006	2007	82635R	**100609041**	
X9	125	2001	2002	82635R	**100609041**	
X9 Evolution	125	2003	2006	82635R	**100609041**	
X9 Evolution Euro3	125	2007	2007	82635R	**100609041**	
Zip	125	2000	2002	82635R	**100609041**	
Fly	150	2005	2007	82635R	**100609041**	
Fly Euro3	150	2008	2011	82635R	**100609041**	
Liberty 4T 3V Lem	150	2013	2014	82635R	**100609041**	
Liberty 4T Euro3	150	2008	2008	82635R	**100609041**	
Liberty 4T Sport Euro3	150	2008	2008	82635R	**100609041**	
Liberty Iget 4T 3V Ie	150	2015	2016	82635R	**100609041**	
Liberty Moc 4T Euro3	150	2009	2013	82635R	**100609041**	
Medley 4T Ie Abs	150	2016	2016	82635R	**100609041**	
Vespa Gts 4T E4 Abs	150	2016	2017	82635R	**100609041**	
Vespa Lt 4T 3V Ie	150	2014	2014	82635R	**100609041**	
Vespa Lx	150	2005	2006	82635R	**100609041**	
Vespa Lx 4T 3V Ie - Touring	150	2012	2013	82635R	**100609041**	
Vespa Lx 4T FI	150	2009	2009	82635R	**100609041**	
Vespa Lx Euro 3	150	2006	2008	82635R	**100609041**	
Vespa Lx Euro 3 Ie	150	2009	2011	82635R	**100609041**	
Vespa Lx Touring	150	2010	2012	82635R	**100609041**	
Vespa Primavera 4T 3V Iget Abs	150	2016	2017	82635R	**100609041**	
Vespa Primavera 4T-3V	150	2013	2016	82635R	**100609041**	
Vespa S 4T	150	2008	2009	82635R	**100609041**	
Vespa S 4T Ie & College	150	2009	2012	82635R	**100609041**	
Vespa Sprint Sport 4T 3V Iget Abs	150	2016	2016	82635R	**100609041**	
X8 Street Euro 2	150	2006	2008	82635R	**100609041**	
X9 Amalfi	180	2000	2003	82635R	**100609041**	
Ape Calessino (City)	200	2013	2017	82635R	**100609041**	
Carnaby	200	2007	2008	82635R	**100609041**	
Liberty	200	2006	2006	82635R	**100609041**	
Liberty 4T Euro3	200	2006	2008	82635R	**100609041**	
Liberty 4T Sport Euro3	200	2006	2007	82635R	**100609041**	
Liberty Rst	200	2004	2004	82635R	**100609041**	

Modello *Model*	CC	Da *From*	A *To*	OEM	Codice RMS *RMS Code*	Note *Notes*
Liberty Sport	200	2006	2006	82635R	**100609041**	
Vespa Granturismo	200	2006	2007	82635R	**100609041**	
X8	200	2005	2007	82635R	**100609041**	
X9	200	2002	2003	82635R	**100609041**	
X9 Evolution	200	2003	2003	82635R	**100609041**	
Beverly	250	2006	2007	82635R	**100609041**	
Beverly Cruiser	250	2007	2009	82635R	**100609041**	
Beverly Euro 3 Mic	250	2007	2007	82635R	**100609041**	
Beverly Ie Euro 3	250	2006	2008	82635R	**100609041**	
Beverly Rst	250	2004	2005	82635R	**100609041**	
Beverly Sport	250	2006	2008	82635R	**100609041**	
Beverly Tourer Euro3	250	2007	2009	82635R	**100609041**	
Carnaby	250	2008	2008	82635R	**100609041**	
Mp3	250	2006	2008	82635R	**100609041**	
Mp3 Lt	250	2008	2009	82635R	**100609041**	
Mp3 Mic	250	2008	2009	82635R	**100609041**	
Vespa Gt 60 Euro 3	250	2006	2007	82635R	**100609041**	
Vespa Gts	250	2005	2016	82635R	**100609041**	
Vespa Gts Abs	250	2005	2012	82635R	**100609041**	
Vespa Gtv	250	2006	2009	82635R	**100609041**	
Vespa Gtv 4T Navy Euro3	250	2007	2007	82635R	**100609041**	
X Evo	250	2007	2016	82635R	**100609041**	
X7 Euro 3	250	2008	2008	82635R	**100609041**	
X8 Euro3	250	2005	2008	82635R	**100609041**	
X9 Evolution	250	2004	2006	82635R	**100609041**	
Beverly Ie Abs E4	300	2016	2016	82635R	**100609041**	
Beverly Rst 4T 4V Ie Euro3	300	2010	2015	82635R	**100609041**	
Beverly Tourer Euro3	300	2009	2010	82635R	**100609041**	
Carnaby Cruiser	300	2009	2012	82635R	**100609041**	
Mp3 300 Ie Lt	300	2010	2011	82635R	**100609041**	
Mp3 300 Ie Mic	300	2010	2011	82635R	**100609041**	
Mp3 300 Lt Business - Sport Abs - Enjoy	300	2014	2016	82635R	**100609041**	
Mp3 4T 4V Ie Erl Ibrido	300	2010	2013	82635R	**100609041**	
Mp3 4T 4V Ie Lt Ibrido	300	2010	2011	82635R	**100609041**	
Mp3 Ie E4 Lt Business - Sport Abs	300	2016	2017	82635R	**100609041**	
Mp3 Ie Lt- Ie Lt Sport	300	2011	2014	82635R	**100609041**	
Mp3 Ie Lt Touring	300	2011	2013	82635R	**100609041**	
Mp3 Ie Touring	300	2011	2012	82635R	**100609041**	
Mp3 Yourban Erl	300	2011	2015	82635R	**100609041**	
Mp3 Yourban Lt Erl	300	2011	2012	82635R	**100609041**	
Vespa Gts Ie & Touring	300	2012	2016	82635R	**100609041**	
Vespa Gts Ie Abs E4	300	2016	2017	82635R	**100609041**	
Vespa Gts Ie Touring	300	2011	2012	82635R	**100609041**	
Vespa Gts Super	300	2008	2016	82635R	**100609041**	
Vespa Gts Super Sport	300	2010	2013	82635R	**100609041**	
Vespa Gtv 4T 4V Ie	300	2010	2013	82635R	**100609041**	
Vespa Gtv Via Montenapoleone	300	2010	2010	82635R	**100609041**	
X7 Evo Ie Euro 3	300	2009	2010	82635R	**100609041**	
Beverly 4T 4V Ie Euro3 Sport Touring	350	2011	2014	880887	**100609801**	
Beverly 4T St Ie Abs	350	2016	2017	880887	**100609801**	
X10 4T 4V Ie Euro3	350	2012	2015	82635R	**100609041**	
Beverly Euro 3	400	2006	2007	82960R	**100609071**	
Beverly Tourer Euro3	400	2008	2010	82960R	**100609071**	
Mp3	400	2007	2008	82960R	**100609071**	
Mp3 Ie Lt - Mp3 Ie Lt Sport	400	2008	2010	82960R	**100609071**	
Mp3 Ie Lt Touring	400	2011	2011	82960R	**100609071**	
Mp3 Mic	400	2008	2010	82960R	**100609071**	
Mp3 Rl Touring	400	2011	2011	82960R	**100609071**	

Modello *Model*	CC	Da *From*	A *To*	OEM	Codice RMS *RMS Code*	Note *Notes*
X Evo	400	2007	2011	82960R	**100609071**	
X8 Euro3	400	2006	2008	82960R	**100609071**	
Ape Calessino - Vme	420	2007	2012	830424	**100609010**	
Ape Car - Max Diesel	420	1986	1996	222721	**100609010**	
Ape Mp601 Classic	420	2006	2013	830424	**100609010**	
Ape Poker Benzina	420	1993	1993	222721	**100609010**	
Ape Poker Diesel	420	1993	1997	222721	**100609010**	
Ape Tm Diesel Lcs	420	2005	2012	830424	**100609010**	
Ape Tm P703-P703V Diesel	420	1987	2004	222721	**100609010**	
Al Diesel	500	2004	2007	112397L	**100609140**	
Beverly	500	2002	2006	82658R	**100609071**	
Beverly Cruiser	500	2007	2012	82960R	**100609071**	
Beverly Euro 3	500	2006	2008	82658R	**100609071**	
Ligier 162 Ambra	500	1998	2000	112397L	**100609140**	
Ligier Nova	500	2000	2000	112397L	**100609140**	
M 500	500	2003	2010	112397L	**100609140**	
Mp3 Lt Business Abs	500	2014	2016	82960R	**100609071**	
Mp3 Lt E4 Sport - Business	500	2016	2016	82960R	**100609071**	
Mp3 Lt Sport - Business	500	2011	2013	82960R	**100609071**	
Mp3 Rl Sport - Business	500	2011	2012	82960R	**100609071**	
Mp3 Sport Abs	500	2014	2016	82960R	**100609071**	
Pk 500	500	2003	2010	850284	**100609140**	
Quargo	500	2005	2017	850284	**100609140**	
X10 4T 4V Ie Euro3	500	2012	2014	82960R	**100609071**	
X10 4T 4V Ie Euro3	500	2012	2015	82635R	**100609041**	
X9 Evolution	500	2003	2007	82658R	**100609071**	
X9 Evolution Abs	500	2006	2007	82658R	**100609071**	
Quargo Diesel	750	2004	2006	112397L	**100609140**	
Porter	1000	1992	1998	438038	**100609821**	
Porter 1000-1300 Pick-Van	1300	1992	2009	1560187204000	**100609821**	
Porter 16V Pick Up-Maxxi-Gpl-4X4	1300	1998	2009	438038	**100609821**	
Porter 16V Van	1300	1998	2007	438038	**100609821**	
Porter Maxxi Up-Date	1300	2009	2010	1560187703000	**100609821**	
Porter Multitech Euro4 - Euro5 - Euro5+	1300	2010	2015	B010014	**100609821**	
Porter Multitech Maxxi Euro4 - Euro5	1300	2010	2015	B010014	**100609821**	
Porter Up-Date	1300	2009	2010	1560187703000	**100609821**	
POLARIS						
Outlaw 450 Mxr	450	2008	2010	2520754	**100609211**	
Outlaw 450 Mxr	450	2008	2010	-	**100609541**	Filtro secondario | *Secondary filter*
Outlaw 525 Irs	525	2008	2011	2520754	**100609211**	
Outlaw 525 Irs	525	2008	2011	-	**100609541**	Filtro secondario | *Secondary filter*
Outlaw 525 S	525	2008	2010	2520754	**100609211**	
Outlaw 525 S	525	2008	2010	-	**100609541**	Filtro secondario | *Secondary filter*
SHERCO						
Enduro 250 2,5 I	250	2007	2008	0116	**100609781**	
Se 250 2,5 I-F	250	2009	2011	0116	**100609781**	
Se 250 2,5 I-Fr Racing	250	2010	2011	0116	**100609781**	
Se 250 I	250	2012	2013	0116	**100609781**	
Se 250 I-R Racing	250	2012	2013	0116	**100609781**	
Sef 250	250	2014	2015	0116	**100609781**	
Sef 250 R Factory	250	2015	2016	0116	**100609781**	
Sef 250 R Racing	250	2014	2016	0116	**100609781**	
Sef 250 R Sixdays	250	2016	2016	0116	**100609781**	
Se 300 3,0 I-F	300	2010	2011	0116	**100609781**	
Se 300 3,0 I-Fr Racing	300	2010	2011	0116	**100609781**	
Se 300 I	300	2012	2013	0116	**100609781**	
Se 300 I-R Racing	300	2012	2013	0116	**100609781**	
Sef 300	300	2014	2015	0116	**100609781**	

Modello *Model*	CC	Da *From*	A *To*	OEM	Codice RMS *RMS Code*	Note *Notes*
Sef 300 R Factory	300	2015	2016	0116	**100609781**	
Sef 300 R Racing	300	2014	2016	0116	**100609781**	
Sef 300 R Sixdays	300	2016	2016	0116	**100609781**	
Enduro 450 4,5 I	450	2007	2008	0116	**100609781**	
Se 450 4,5 I-F	450	2009	2011	0116	**100609781**	
Se 450 4,5 I-F Supermotard	450	2008	2010	0116	**100609781**	
Se 450 4,5 I-Fr Racing	450	2010	2011	0116	**100609781**	
Se 450 I-R Racing	450	2012	2013	0116	**100609781**	
Sef 450 R Factory	450	2016	2016	0116	**100609781**	
Sef 450 R Racing	450	2015	2016	0116	**100609781**	
Sef 450 R Sixdays	450	2016	2016	0116	**100609781**	
Enduro 510 5,1 I	510	2007	2008	0116	**100609781**	
Se 510 5,1 I-F	510	2009	2011	0116	**100609781**	
Se 510 5,1 I-F Supermotard	510	2008	2010	0116	**100609781**	
Se 510 5,1 I-Fr Racing	510	2010	2011	0116	**100609781**	
Se 510 I-R Racing	510	2012	2013	0116	**100609781**	
SUZUKI						
Lt-Z Quadsport K7-L0	90	2007	2010	16510-05240-000	**100609061**	
An S-Y	125	1995	2000	16510-05240-000	**100609061**	
Dr125 Se R-S	125	1994	1995	16510-24501-000	**100609050**	
Dr125 Sm K9-L0	125	2009	2010	16510-05240-000	**100609061**	
Dr-Z125 K8-L0	125	2008	2010	16510-25C00-000	**100609050**	
Dr-Z125L L6-L7	125	2016	2017	16510-25C00-000	**100609050**	
Gn	125	1982	1996	16510-05240-000	**100609061**	
Gz Marauder K3-K4	125	2003	2004	16510-05240-000	**100609061**	
Gz Marauder K8-L0	125	2008	2010	16510-05240-000	**100609061**	
Gz Marauder W-Y	125	1998	2000	16510-05240-000	**100609061**	
Rv125 Van Van K3-K7	125	2003	2007	16510-25C00-000	**100609050**	
Rv125 Van Van K8-L0	125	2008	2010	16510-25C00-000	**100609050**	
Rv125 Van Van L3	125	2013	2013	16510-25C00-000	**100609050**	
Rv125 Van Van L5	125	2015	2015	16510-25C00-000	**100609050**	
Uc Epicuro X-K1	125	1999	2001	16510-05240-000	**100609061**	
Ue Ct K1	125	2001	2001	16510-05240-000	**100609061**	
Uh125 Burgman K2-K6	125	2002	2006	16510-05240-000	**100609061**	
Uh125 Burgman K7-L0	125	2007	2010	16510-05240-000	**100609061**	
Uh125 Burgman L1	125	2011	2012	16510-05240-000	**100609061**	
Ux Sixteen K8-L0	125	2008	2010	16510-05240-000	**100609061**	
Ux Sixteen L1	125	2011	2011	16510-05240-000	**100609061**	
Vl Intruder K5-K7	125	2005	2007	16510-38240-000	**100609450**	
Vl Intruder Y-K1	125	2000	2001	16510-38240-000	**100609450**	
An150 T-Y	150	1996	2000	16510-05240-000	**100609061**	
Uc Epicuro X-K1	150	1999	2001	16510-05240-000	**100609061**	
Ue Ct K1	150	2001	2001	16510-05240-000	**100609061**	
Uh200 Burgman K2-K6	150	2002	2006	16510-05240-000	**100609061**	
Ux Sixteen K8-L0	150	2008	2010	16510-05240-000	**100609061**	
Ux Sixteen L1	150	2011	2011	16510-05240-000	**100609061**	
Rv200 Van-Van	200	2016	2016	16510-25C00-000	**100609050**	
Uh200 Burgman K7-L0	200	2007	2010	16510-05240-000	**100609061**	
Uh200 Burgman L1	200	2011	2012	16510-05240-000	**100609061**	
An250 Burgman K3-K6	250	2003	2006	16510-25C00-000	**100609050**	
An250 Burgman W-K2	250	1998	2002	16510-25C00-000	**100609050**	
Gn F-S	250	1985	1995	16510-38240-000	**100609450**	
Gn T	250	1996	1996	16510-38240-000	**100609450**	
Gw250 Inazuma L3	250	2013	2013	16510-07J00-000	**100609511**	
Gw250 Inazuma L7	250	2017	2017	16510-07J00-000	**100609511**	
Gw250F Inazuma L5	250	2015	2015	16510-07J00-000	**100609511**	
Gw250F Inazuma L7	250	2017	2017	16510-07J00-000	**100609511**	
Gz Marauder K2	250	2002	2002	16510-38240-000	**100609450**	

Modello *Model*	CC	Da *From*	A *To*	OEM	Codice RMS *RMS Code*	Note *Notes*
Gz Marauder K3-K7	250	2003	2007	16510-38240-000	**100609450**	
Gz Marauder X-K1	250	1999	2001	16510-38240-000	**100609450**	
Lt-Z Quadsport K9-L0	250	2009	2010	16510-25C00-000	**100609050**	
Rm-Z250 K7-K9	250	2007	2009	16510-35G00-000	**100609571**	
Rm-Z250 L0	250	2010	2010	16510-35G00-000	**100609571**	
Rm-Z250 L1	250	2011	2011	16510-35G00-000	**100609571**	
Rm-Z250 L2	250	2012	2012	16510-35G00-000	**100609571**	
Rm-Z250 L3	250	2013	2013	16510-35G00-000	**100609571**	
Rm-Z250 L4	250	2014	2014	16510-35G00-000	**100609571**	
Rm-Z250 L5	250	2015	2015	16510-35G00-000	**100609571**	
Rm-Z250 L6	250	2016	2016	16510-35G00-000	**100609571**	
Rm-Z250 L7	250	2017	2017	16510-35G00-000	**100609571**	
Tu250X V-K1	250	1997	2001	16510-38240-000	**100609450**	
Vl Intruder K5-K7	250	2005	2007	16510-38240-000	**100609450**	
Vl Intruder Y-K1	250	2000	2001	16510-38240-000	**100609450**	
Dr350S L-R	350	1990	1994	16510-38240-000	**100609450**	
Dr350Se R-W	350	1994	1998	16510-38240-000	**100609450**	
An400 Burgman K3-K6	400	2003	2006	16510-25C00-000	**100609050**	
An400 Burgman K7-L0	400	2007	2010	16510-05240-000	**100609061**	
An400 Burgman L1	400	2011	2011	16510-05240-000	**100609061**	
An400 Burgman L2	400	2012	2012	16510-05240-000	**100609061**	
An400 Burgman L3	400	2013	2013	16510-05240-000	**100609061**	
An400 Burgman L4	400	2014	2014	16510-05240-000	**100609061**	
An400 Burgman L5	400	2015	2015	16510-05240-000	**100609061**	
An400 Burgman L6	400	2016	2016	16510-05240-000	**100609061**	
An400 Burgman X-K2	400	1999	2002	16510-25C00-000	**100609050**	
Dr-Z400 Y-K3	400	2000	2003	16510-29F00-000	**100609621**	
Dr-Z400E K5-K7	400	2005	2007	16510-29F00-000	**100609621**	
Dr-Z400S K5-K9	400	2005	2009	16510-29F00-000	**100609621**	
Dr-Z400S Y-K4	400	2000	2004	16510-29F00-000	**100609621**	
Dr-Z400Sm K5-K9	400	2005	2009	16510-29F00-000	**100609621**	
Gsf400 Bandit M-P	400	1991	1993	16510-45040-000	**100609271**	
Lt-A400F Kingquad 4X4 K8-L0	400	2008	2010	16510-03G00-X07	**100609511**	
Lt-A400F Kingquad 4X4 L1	400	2011	2011	16510-03G00-X07	**100609511**	
Lt-F Kingquad Fs 4X2 K8-L0	400	2008	2010	16510-03G00-X07	**100609511**	
Lt-F Kingquad Fs 4X4 K8-L0	400	2008	2010	16510-03G00-X07	**100609511**	
Lt-F Kingquad Fs 4X4 L1	400	2011	2011	16510-03G00-X07	**100609511**	
Lt-F Kingquad Fs 4X4 L2	400	2012	2012	16510-07J00-000	**100609511**	
Lt-Z Quadsport K4-K7	400	2004	2007	16510-29F00-000	**100609621**	
Lt-Z Quadsport K8	400	2008	2008	16510-29F00-000	**100609621**	
Lt-Z Quadsport K9-L0	400	2009	2010	16510-29F00-000	**100609621**	
Lt-Z Quadsport L1	400	2011	2011	16510-29F00-000	**100609621**	
Lt-Z Quadsport L2	400	2012	2012	16510-29F00-000	**100609621**	
Lt-A450X Kingquad 4X4 K7-L0	450	2007	2010	16510-03G00-X07	**100609511**	
Lt-R Quadracer K6-L0	450	2006	2010	16510-29F00-000	**100609621**	
Lt-R Quadracer L1	450	2011	2011	16510-29F00-000	**100609621**	
Rmx450Z L0	450	2010	2010	16510-35G00-000	**100609571**	
Rmx450Z L4	450	2014	2014	16510-35G00-000	**100609571**	
Rmx450Z L6	450	2016	2016	16510-35G00-000	**100609571**	
Rmx450Z L7	450	2017	2017	16510-35G00-000	**100609571**	
Rm-Z450 K5-K6	450	2005	2006	16510-35G00-000	**100609571**	
Rm-Z450 K7	450	2007	2007	16510-35G00-000	**100609571**	
Rm-Z450 K8-L1	450	2008	2011	16510-35G00-000	**100609571**	
Rm-Z450 L2	450	2012	2012	16510-35G00-000	**100609571**	
Rm-Z450 L3	450	2013	2013	16510-35G00-000	**100609571**	
Rm-Z450 L4	450	2014	2014	16510-35G00-000	**100609571**	
Rm-Z450 L5	450	2015	2015	16510-35G00-000	**100609571**	
Rm-Z450 L6	450	2016	2016	16510-35G00-000	**100609571**	

Modello *Model*	CC	Da *From*	A *To*	OEM	Codice RMS *RMS Code*	Note *Notes*
Rm-Z450 L7	450	2017	2017	16510-35G00-000	**100609571**	
Gs500 K1-K2	500	2001	2002	16510-45040-000	**100609271**	
Gs500 K3-K6	500	2003	2006	16510-45040-000	**100609271**	
Gs500E K-T	500	1989	1996	16510-45040-000	**100609271**	
Gs500H/Fh K7	500	2007	2007	16510-45040-000	**100609271**	
Lt-A Kingquad X L2	500	2012	2012	16510-07J00-000	**100609511**	
Lt-A Kingquad Xp K9-L0	500	2009	2010	16510-03G00-X07	**100609511**	
Lt-A Kingquad Xp L1	500	2011	2011	16510-03G00-X07	**100609511**	
Lt-A Kingquad Xp L2	500	2012	2012	16510-07J00-000	**100609511**	
Lt-A500F Vinson K4-K7	500	2004	2007	16510-03G00-X07	**100609511**	
Gsx E F-H (Gsx600Esh)	550	1985	1987	16510-45040-000	**100609271**	
Dr600R G-K	600	1986	1989	16510-37440-000	**100609651**	
Dr600S F-K	600	1985	1989	16510-37440-000	**100609651**	
Gsf600 Bandit S-W	600	1995	1998	16510-34E00-000	**100609511**	
Gsf600 Bandit Y-K4	600	2000	2004	16510-03G00-X07	**100609511**	
Gsr600 K6-L0	600	2006	2010	16510-07J00-000	**100609511**	
Gsx600F J-S	600	1988	1995	16510-06B01-000	**100609511**	
Gsx600F K4-K6	600	2004	2006	16510-03G00-X07	**100609511**	
Gsx600F W-K3	600	1998	2003	16510-34E00-000	**100609511**	
Gsx-R600 K1-K3	600	2001	2003	16510-34E00-000	**100609511**	
Gsx-R600 K4-K5	600	2004	2005	16510-03G00-X07	**100609511**	
Gsx-R600 K6-K7	600	2006	2007	16510-03G00-X07	**100609511**	
Gsx-R600 K8-L0	600	2008	2010	16510-03G00-X07	**100609511**	
Gsx-R600 L1	600	2011	2011	16510-07J00-000	**100609511**	
Gsx-R600 L2	600	2012	2012	16510-07J00-000	**100609511**	
Gsx-R600 L3	600	2013	2013	16510-07J00-000	**100609511**	
Gsx-R600 L4	600	2014	2014	16510-07J00-000	**100609511**	
Gsx-R600 L5	600	2015	2015	16510-07J00-000	**100609511**	
Gsx-R600 L6	600	2016	2016	16510-07J00-000	**100609511**	
Gsx-R600 L7	600	2017	2017	16510-07J00-000	**100609511**	
Gsx-R600 V-Y	600	1997	2000	16510-34E00-000	**100609511**	
Rf600R P-T	600	1993	1996	16510-06B01-000	**100609511**	
Vs600Gl Intruder S-V	600	1995	1997	16510-34E00-000	**100609511**	
An650 Burgman K3-K5	650	2003	2005	16510-03G00-X07	**100609511**	
An650 Burgman K6-L0	650	2006	2010	16510-07J00-000	**100609511**	
An650 Burgman L1	650	2011	2011	16510-07J00-000	**100609511**	
An650 Burgman L2	650	2012	2012	16510-07J00-000	**100609511**	
An650 Burgman L3	650	2013	2013	16510-07J00-000	**100609511**	
An650 Burgman L4	650	2014	2014	16510-07J00-000	**100609511**	
An650 Burgman L5	650	2015	2015	16510-07J00-000	**100609511**	
An650 Burgman L6	650	2016	2016	16510-07J00-000	**100609511**	
Dl650 V-Strom K4-K6	650	2004	2006	16510-03G00-X07	**100609511**	
Dl650 V-Strom K7-L0	650	2007	2010	16510-03G00-X07	**100609511**	
Dl650 V-Strom L1	650	2011	2011	16510-03G00-X07	**100609511**	
Dl650 V-Strom L2	650	2012	2012	16510-07J00-000	**100609511**	
Dl650A V-Strom Abs L3	650	2013	2013	16510-07J00-000	**100609511**	
Dl650A V-Strom Abs L4	650	2014	2014	16510-07J00-000	**100609511**	
Dl650A V-Strom Abs L5	650	2015	2015	16510-07J00-000	**100609511**	
Dl650A(Ue)/Xa(Ue) V-Strom	650	2017	2017	16510-07J00-000	**100609511**	
Dl650A(Ue)/Xa(Ue)L6 V-Strom	650	2016	2016	16510-07J00-000	**100609511**	
Dl650Xt V-Strom	650	2015	2015	16510-07J00-000	**100609511**	
Dr650R L-M	650	1990	1991	16510-37440-000	**100609651**	
Dr650R N-P	650	1992	1993	16510-37440-000	**100609651**	
Dr650Re R-S	650	1994	1995	16510-37440-000	**100609651**	
Dr650Rs L-M	650	1990	1991	16510-37440-000	**100609651**	
Dr650Rse M-P	650	1991	1993	16510-37440-000	**100609651**	
Dr650Se T-V	650	1996	1997	16510-37440-000	**100609651**	
Gsf Bandit K5-K6	650	2005	2006	16510-03G00-X07	**100609511**	

Modello *Model*	CC	Da *From*	A *To*	OEM	Codice RMS *RMS Code*	Note *Notes*
Gsf Bandit K7-K8	650	2007	2008	16510-03G00-X07	**100609511**	
Gsf Bandit K9-L0	650	2009	2010	16510-03G00-X07	**100609511**	
Gsf Bandit L1	650	2011	2011	16510-07J00-000	**100609511**	
Gsf Bandit L2	650	2012	2012	16510-07J00-000	**100609511**	
Gsx F K8-L0	650	2008	2010	16510-03G00-X07	**100609511**	
Gsx F L1	650	2011	2011	16510-07J00-000	**100609511**	
Gsx F L2	650	2012	2012	16510-07J00-000	**100609511**	
Ls650P Savage G-R	650	1986	1994	16510-37450-000	**100609651**	
Ls650P Savage T-V	650	1996	1997	16510-37440-000	**100609651**	
Sfv Gladius K9-L0	650	2009	2010	16510-03G00-X07	**100609511**	
Sfv Gladius L1	650	2011	2011	16510-03G00-X07	**100609511**	
Sfv Gladius L2	650	2012	2012	16510-07J00-000	**100609511**	
Sfv Gladius L3	650	2013	2013	16510-07J00-000	**100609511**	
Sfv Gladius L4	650	2014	2014	16510-07J00-000	**100609511**	
Sfv650(U/A/Ua)Gladius L5	650	2015	2015	16510-07J00-000	**100609511**	
Sv650 K3-K7	650	2003	2007	16510-03G00-X07	**100609511**	
Sv650 K8-L0	650	2008	2010	16510-03G00-X07	**100609511**	
Sv650 X-K2	650	1999	2002	16510-34E00-000	**100609511**	
Sv650A L7	650	2017	2017	16510-07J00-000	**100609511**	
Sv650Sl5	650	2015	2015	16510-07J00-000	**100609511**	
Xf Freewind V-K1	650	1997	2001	16510-37450-000	**100609651**	
Lt-A Kingquad K6-K7	700	2006	2007	16510-03G00-X07	**100609511**	
Dr750 J-K	750	1988	1989	16510-37440-000	**100609651**	
Gsr750(A)L6	750	2016	2016	16510-07J00-000	**100609511**	
Gsr750L1	750	2011	2011	16510-07J00-000	**100609511**	
Gsr750L2	750	2012	2012	16510-07J00-000	**100609511**	
Gsr750L3	750	2013	2013	16510-07J00-000	**100609511**	
Gsr750Z(A)L4	750	2014	2014	16510-07J00-000	**100609511**	
Gsr750Z(A)L5	750	2015	2015	16510-07J00-000	**100609511**	
Gsx750 W-K1	750	1998	2001	16510-34E00-000	**100609511**	
Gsx750F K4-K6	750	2004	2006	16510-03G00-X07	**100609511**	
Gsx750F K-T	750	1989	1996	16510-06B01-000	**100609511**	
Gsx750F W-K3	750	1998	2003	16510-34E00-000	**100609511**	
Gsx-R750 J-L	750	1988	1990	16510-34E00-000	**100609511**	
Gsx-R750 K4-K5	750	2004	2005	16510-03G00-X07	**100609511**	
Gsx-R750 K6-K7	750	2006	2007	16510-03G00-X07	**100609511**	
Gsx-R750 K8-L0	750	2008	2010	16510-03G00-X07	**100609511**	
Gsx-R750 L1	750	2011	2011	16510-07J00-000	**100609511**	
Gsx-R750 L2	750	2012	2012	16510-07J00-000	**100609511**	
Gsx-R750 L3	750	2013	2013	16510-07J00-000	**100609511**	
Gsx-R750 L4	750	2014	2014	16510-07J00-000	**100609511**	
Gsx-R750 L5	750	2015	2015	16510-07J00-000	**100609511**	
Gsx-R750 L6	750	2016	2016	16510-07J00-000	**100609511**	
Gsx-R750 L7	750	2017	2017	16510-07J00-000	**100609511**	
Gsx-R750 T-X	750	1996	1999	16510-34E00-000	**100609511**	
Gsx-R750 Y-K3	750	2000	2003	16510-34E00-000	**100609511**	
Gsx-R750M	750	1991	1991	16510-34E00-000	**100609511**	
Gsx-R750Sp R	750	1994	1994	16510-06B01-000	**100609511**	
Gsx-R750W N-S	750	1992	1995	16510-34E00-000	**100609511**	
Gsx-S750A(Z) L7	750	2017	2017	16510-07J00-000	**100609511**	
Lt-A X Kingquad K8-L0	750	2008	2010	16510-03G00-X07	**100609511**	
Lt-A X Kingquad L1	750	2011	2011	16510-03G00-X07	**100609511**	
Lt-A X Kingquad L2	750	2012	2012	16510-07J00-000	**100609511**	
Lt-A Xp Kingquad K9-L0	750	2009	2010	16510-03G00-X07	**100609511**	
Lt-A Xp Kingquad L1	750	2011	2011	16510-03G00-X07	**100609511**	
Lt-A Xp Kingquad L2	750	2012	2012	16510-07J00-000	**100609511**	
Vs750Gl Intruder F-M	750	1985	1991	16510-34E00-000	**100609511**	
Dr800S M-P	800	1991	1993	16510-37440-000	**100609651**	

Modello *Model*	CC	Da *From*	A *To*	OEM	Codice RMS *RMS Code*	Note *Notes*
VI800 Intruder C800 K6-L0	800	2006	2010	16510-03G00-X07	**100609511**	
VI800 Intruder C800 L1	800	2011	2011	16510-03G00-X07	**100609511**	
VI800 Intruder C800 L2	800	2012	2012	16510-07J00-000	**100609511**	
VI800 Intruder C800 L3	800	2013	2013	16510-07J00-000	**100609511**	
VI800 Intruder Volusia K1-K5	800	2001	2005	16510-03G00-X07	**100609511**	
VI800B Intruder C800 L4	800	2014	2014	16510-07J00-000	**100609511**	
Vs800 GI Intruder N-S	800	1992	1995	16510-34E00-000	**100609511**	
Vx800 L-R	800	1990	1994	16510-34E00-000	**100609511**	
Vz800 Intruder M800 K5-K9	800	2005	2009	16510-03G00-X07	**100609511**	
Vz800 Intruder M800 L0	800	2010	2010	16510-03G00-X07	**100609511**	
Vz800 Intruder M800 L1	800	2011	2011	16510-03G00-X07	**100609511**	
Vz800 Intruder M800 L2	800	2012	2012	16510-07J00-000	**100609511**	
Vz800 Intruder M800 L3	800	2013	2013	16510-07J00-000	**100609511**	
Vz800 Intruder M800 L4	800	2014	2014	16510-07J00-000	**100609511**	
Vz800 Marauder V-K2	800	1997	2002	16510-06B01-000	**100609511**	
Rf900R R-T	900	1994	1996	16510-06B01-000	**100609511**	
DI1000 V-Strom	1000	2014	2014	16510-07J00-000	**100609511**	
DI1000 V-Strom K2-K6	1000	2002	2006	16510-03G00-X07	**100609511**	
DI1000 V-Strom K7-L0	1000	2007	2010	16510-03G00-X07	**100609511**	
DI1000 V-Strom L5	1000	2015	2015	16510-07J00-000	**100609511**	
DI1000 V-Strom L6	1000	2016	2016	16510-07J00-000	**100609511**	
DI1000(X)A V-Strom L8	1000	2018	2018	16510-07J00-000	**100609511**	
Gsx-R1000 K1-K2	1000	2001	2002	16510-34E00-000	**100609511**	
Gsx-R1000 K3-K4	1000	2003	2004	16510-03G00-X07	**100609511**	
Gsx-R1000 K5-K6	1000	2005	2006	16510-03G00-X07	**100609511**	
Gsx-R1000 K7-K8	1000	2007	2008	16510-03G00-X07	**100609511**	
Gsx-R1000 K9-L0	1000	2009	2010	16510-03G00-X07	**100609511**	
Gsx-R1000 L1	1000	2011	2011	16510-07J00-000	**100609511**	
Gsx-R1000 L3	1000	2013	2013	16510-07J00-000	**100609511**	
Gsx-R1000 L4	1000	2014	2014	16510-07J00-000	**100609511**	
Gsx-R1000 L5	1000	2015	2015	16510-07J00-000	**100609511**	
Gsx-R1000(A) L6	1000	2016	2016	16510-07J00-000	**100609511**	
Gsx-R1000A Abs L5	1000	2015	2015	16510-07J00-000	**100609511**	
Gsx-R1000A L7	1000	2017	2017	16510-07J00-000	**100609511**	
Gsx-R1000Z L4	1000	2014	2014	16510-07J00-000	**100609511**	
Gsx-S1000 L6	1000	2016	2016	16510-07J00-000	**100609511**	
Gsx-S1000F L6	1000	2016	2016	16510-07J00-000	**100609511**	
Gsx-S1000Fa L8	1000	2018	2018	16510-07J00-000	**100609511**	
Sv1000 K6-K7	1000	2006	2007	16510-03G00-X07	**100609511**	
Sv1000K3-K5	1000	2003	2005	16510-03G00-X07	**100609511**	
TI1000R W-Y	1000	1998	2000	16510-34E00-000	**100609511**	
TI1000S V-K1	1000	1997	2001	16510-34E00-000	**100609511**	
Gsx F J-P	1100	1988	1993	16510-06B01-000	**100609511**	
Gsx-R G-J	1100	1986	1988	16510-06B01-000	**100609511**	
Gsx-R K-L	1100	1989	1990	16510-06B01-000	**100609511**	
Gsx-R M-N	1100	1991	1992	16510-06B01-000	**100609511**	
Gsx-R W P-T	1100	1993	1996	16510-03G00-X07	**100609511**	
Gsf Bandit K1-K5	1200	2001	2005	16510-03G00-X07	**100609511**	
Gsf Bandit K6	1200	2006	2006	16510-03G00-X07	**100609511**	
Gsf Bandit T-Y	1200	1996	2000	16510-06B01-000	**100609511**	
Gsx1200 X-K1	1200	1999	2001	16510-34E00-000	**100609511**	
Gsf1250 Bandit K7-L0	1250	2007	2010	16510-03G00-X07	**100609511**	
Gsf1250 Bandit L0	1250	2010	2010	16510-07J00-000	**100609511**	
Gsf1250 Bandit L1	1250	2011	2011	16510-07J00-000	**100609511**	
Gsf1250S Bandit L1	1250	2011	2011	16510-07J00-000	**100609511**	
Gsf1250S Bandit L2	1250	2012	2012	16510-07J00-000	**100609511**	
Gsf1250Sa Bandit L5-L6	1250	2015	2016	16510-07J00-000	**100609511**	
Gsx1250Fa L0	1250	2010	2010	16510-07J00-000	**100609511**	

Modello *Model*	CC	Da *From*	A *To*	OEM	Codice RMS *RMS Code*	Note *Notes*
Gsx1250Fa L1	1250	2011	2011	16510-07J00-000	**100609511**	
Gsx1250Fa L2	1250	2012	2012	16510-07J00-000	**100609511**	
Gsx1250Fa L6	1250	2016	2016	16510-07J00-000	**100609511**	
Gsx1300Bk B-King K8-L0	1300	2008	2010	16510-03G00-X07	**100609511**	
Gsx1300Ra Hayabusa L6	1300	2016	2016	16510-07J00-000	**100609511**	
Gsx1300Ra Hayabusa L7	1300	2017	2017	16510-07J00-000	**100609511**	
Gsx1300Raz Hayabusa L4	1300	2014	2014	16510-07J00-000	**100609511**	
Gsz1300R Hayabusa K4-K7	1300	2004	2007	16510-03G00-X07	**100609511**	
Gsz1300R Hayabusa K8-L0	1300	2008	2010	16510-03G00-X07	**100609511**	
Gsz1300R Hayabusa L1	1300	2011	2011	16510-03G00-X07	**100609511**	
Gsz1300R Hayabusa L2	1300	2012	2012	16510-07J00-000	**100609511**	
Gsz1300R Hayabusa X-K3	1300	1999	2003	16510-34E00-000	**100609511**	
Gsz1300Ra Hayabusa L3	1300	2013	2013	16510-07J00-000	**100609511**	
Gsx K2-K5	1400	2002	2005	16510-03G00-X07	**100609511**	
Gsx K6-K7	1400	2006	2007	16510-03G00-X07	**100609511**	
Vs Gl Intruder H-S	1400	1987	1995	16510-06B01-000	**100609511**	
Vs Glp Intruder T-W	1400	1996	1998	16510-06B01-000	**100609511**	
Vl Intruder C1500T L3	1500	2013	2013	16510-07J00-000	**100609511**	
Vl Intruder C1500T L5	1500	2015	2015	16510-07J00-000	**100609511**	
Vl Intruder Lc K5-K8	1500	2005	2008	16510-03G00-X07	**100609511**	
Vl Intruder Lc W-K3	1500	1998	2003	16510-34E00-000	**100609511**	
Vz Intruder M1600 K4-K5	1600	2004	2005	K1609-71072-000	**100609351**	
Vlr Intruder C1800R K8-L0	1800	2008	2010	16510-03G00-X07	**100609511**	
Vlr Intruder C1800R L1	1800	2011	2011	16510-03G00-X07	**100609511**	
Vzr Intruder M1800R K6-L0	1800	2006	2010	16510-07J00-000	**100609511**	
Vzr Intruder M1800R L1	1800	2011	2011	16510-07J00-000	**100609511**	
Vzr Intruder M1800R L2	1800	2012	2012	16510-07J00-000	**100609511**	
Vzr1800 (Bz/Uf) Intruder M1800R L6	1800	2016	2016	16510-07J00-000	**100609511**	
Vzr1800Bz Intruder M1800R L4	1800	2014	2014	16510-07J00-000	**100609511**	
SYM						
Maxsym I	400	2011	2012	15400L4A000	**100609050**	
Maxsym I Abs	400	2012	2012	15400L4A000	**100609050**	
TRIUMPH						
Daytona 600	600	2003	2004	T1210200	**100609751**	
Speed Four 600	600	2002	2005	T1210200	**100609751**	
Tt 600	600	2000	2003	T1210200	**100609751**	
Daytona 650	650	2005	2005	T1210444	**100609351**	
Daytona 675	675	2006	2013	T1210444	**100609351**	
Daytona 675 Abs	675	2013	2017	T1210444	**100609351**	
Daytona 675 R	675	2011	2012	T1210444	**100609351**	
Daytona 675 R Abs	675	2013	2017	T1210444	**100609351**	
Street Triple 675	675	2008	2013	T1210444	**100609351**	
Street Triple 675 Abs	675	2013	2016	T1210444	**100609351**	
Street Triple 675 R	675	2009	2013	T1210444	**100609351**	
Street Triple 675 R Abs	675	2013	2016	T1210444	**100609351**	
Street Triple 675 Rx Abs	675	2015	2016	T1210444	**100609351**	
Bonneville 800	800	2001	2004	T1210200	**100609751**	
Bonneville 800	800	2005	2006	T1210444	**100609351**	
Bonneville 800 America	800	2002	2004	T1210200	**100609751**	
Bonneville 800 America	800	2005	2006	T1210444	**100609351**	
Bonneville 800 T100	800	2002	2004	T1210200	**100609751**	
Speedmaster 800	800	2003	2004	T1210200	**100609751**	
Tiger 800	800	2011	2013	T1210444	**100609351**	
Tiger 800 Abs	800	2011	2014	T1210444	**100609351**	
Tiger 800 Xc	800	2011	2013	T1210444	**100609351**	
Tiger 800 Xc Abs	800	2011	2016	T1210444	**100609351**	
Tiger 800 Xca Abs	800	2015	2016	T1210444	**100609351**	
Tiger 800 Xcx Abs	800	2015	2016	T1210444	**100609351**	

Modello *Model*	CC	Da *From*	A *To*	OEM	Codice RMS *RMS Code*	Note *Notes*
Tiger 800 Xcx Low Abs	800	2016	2016	T1210444	**100609351**	
Tiger 800 Xr Abs	800	2015	2016	T1210444	**100609351**	
Tiger 800 Xrt Abs	800	2015	2016	T1210444	**100609351**	
Tiger 800 Xrx Abs	800	2015	2016	T1210444	**100609351**	
Tiger 800 Xrx Low Abs	800	2016	2016	T1210444	**100609351**	
America 865	865	2007	2008	T1210444	**100609351**	
America 865 Efi	865	2008	2016	T1210444	**100609351**	
America 865 Lt Efi	865	2014	2016	T1210444	**100609351**	
Bonneville 865	865	2007	2007	T1210444	**100609351**	
Bonneville 865 Efi	865	2008	2016	T1210444	**100609351**	
Bonneville 865 Efi Newchurch	865	2015	2015	T1210444	**100609351**	
Bonneville 865 Efi T100	865	2008	2015	T1210444	**100609351**	
Bonneville 865 Efi T100 Spirit Edition	865	2015	2015	T1210444	**100609351**	
Bonneville 865 Efi T214 Limited Editon	865	2015	2015	T1210444	**100609351**	
Bonneville 865 Se Efi	865	2009	2013	T1210444	**100609351**	
Bonneville 865 T100	865	2005	2007	T1210444	**100609351**	
Scrambler 865	865	2006	2007	T1210444	**100609351**	
Scrambler 865 Efi	865	2008	2016	T1210444	**100609351**	
Speedmaster 865	865	2005	2007	T1210444	**100609351**	
Speedmaster 865 Efi	865	2008	2016	T1210444	**100609351**	
Thruxton 865	865	2004	2007	T1210444	**100609351**	
Thruxton 865 Efi	865	2008	2015	T1210444	**100609351**	
Thruxton 865 Efi Ace	865	2015	2015	T1210444	**100609351**	
Speed Triple 900 Efi	900	1997	1998	T1210200	**100609751**	
Street Twin 900 Efi Abs	900	2016	2016	T1210444	**100609351**	
Tiger 900 Efi	900	1999	2001	T1210200	**100609751**	
Daytona 955 I Centennial Single Sided Swingarm	955	2002	2002	T1210200	**100609751**	
Daytona 955 I Single Sided Swingarm	955	1997	2004	T1210200	**100609751**	
Daytona 955 I Single Sided Swingarm	955	2005	2006	T1210444	**100609351**	
Daytona 955 I Zweiarmschwinge	955	2002	2002	T1210200	**100609751**	
Masterblaster 955 Ss	955	1996	1997	T1210200	**100609751**	
Speed Triple 955 Efi	955	1999	2004	T1210200	**100609751**	
Sprint 955 Rs Single Sided Swingarm	955	2002	2004	T1210200	**100609751**	
Sprint 955 Rs Zweiarmschwinge	955	2000	2002	T1210200	**100609751**	
Sprint 955 St	955	1999	2004	T1210200	**100609751**	
Tiger 955 I Cast Wheel	955	2005	2006	T1210444	**100609351**	
Tiger 955 I Spoked Wheel	955	2001	2004	T1210200	**100609751**	
Speed Triple 1050 Efi	1050	2005	2013	T1210444	**100609351**	
Speed Triple 1050 Efi 94 Abs	1050	2015	2017	T1210444	**100609351**	
Speed Triple 1050 Efi Abs	1050	2011	2016	T1210444	**100609351**	
Speed Triple 1050 R Efi 94 Abs	1050	2016	2017	T1210444	**100609351**	
Speed Triple 1050 R Efi Abs	1050	2012	2016	T1210444	**100609351**	
Speed Triple 1050 S Efi Abs	1050	2016	2016	T1210444	**100609351**	
Sprint 1050 Gt Abs	1050	2010	2013	T1210444	**100609351**	
Sprint 1050 St	1050	2005	2010	T1210444	**100609351**	
Sprint 1050 St Abs	1050	2007	2010	T1210444	**100609351**	
Tiger 1050	1050	2007	2010	T1210444	**100609351**	
Tiger 1050 Abs	1050	2007	2011	T1210444	**100609351**	
Tiger 1050 Se	1050	2010	2012	T1210444	**100609351**	
Tiger 1050 Se Abs	1050	2011	2013	T1210444	**100609351**	
Tiger 1050 Sport Abs	1050	2013	2016	T1210444	**100609351**	
Bonneville 1200 Efi T120 Abs	1200	2016	2016	T1210444	**100609351**	
Bonneville 1200 Efi T120 Black Abs	1200	2016	2016	T1210444	**100609351**	
Thruxton 1200 Efi Abs	1200	2016	2016	T1210444	**100609351**	
Thruxton 1200 R Efi Abs	1200	2016	2016	T1210444	**100609351**	
Tiger 1200 Explorer Abs	1200	2012	2016	T1210444	**100609351**	
Tiger 1200 Explorer Spoked Abs	1200	2016	2016	T1210444	**100609351**	
Tiger 1200 Xc Explorer Abs	1200	2013	2016	T1210444	**100609351**	

Modello *Model*	CC	Da *From*	A *To*	OEM	Codice RMS *RMS Code*	Note *Notes*
Tiger 1200 Xca Explorer Abs	1200	2016	2016	T1210444	**100609351**	
Tiger 1200 Xcx Explorer Abs	1200	2016	2016	T1210444	**100609351**	
Tiger 1200 Xcx Explorer Low Abs	1200	2016	2016	T1210444	**100609351**	
Tiger 1200 Xr Explorer Abs	1200	2016	2016	T1210444	**100609351**	
Tiger 1200 Xrt Explorer Abs	1200	2016	2016	T1210444	**100609351**	
Tiger 1200 Xrx Explorer Abs	1200	2016	2016	T1210444	**100609351**	
Trophy 1215 Abs	1215	2013	2014	T1210444	**100609351**	
Trophy 1215 Se Abs	1215	2013	2016	T1210444	**100609351**	
Thunderbird 1600	1600	2009	2013	T1210444	**100609351**	
Thunderbird 1600 Abs	1600	2010	2015	T1210444	**100609351**	
Thunderbird 1700 Commander Abs	1700	2014	2016	T1210444	**100609351**	
Thunderbird 1700 Lt Abs	1700	2014	2016	T1210444	**100609351**	
Thunderbird 1700 Nightstorm Abs	1700	2015	2016	T1210444	**100609351**	
Thunderbird 1700 Storm	1700	2011	2013	T1210444	**100609351**	
Thunderbird 1700 Storm Abs	1700	2011	2016	T1210444	**100609351**	
Rocket 2300 Iii	2300	2004	2009	T1210444	**100609351**	
Rocket 2300 Iii Classic	2300	2006	2009	T1210444	**100609351**	
Rocket 2300 Iii Roadster Abs	2300	2010	2016	T1210444	**100609351**	
Rocket 2300 Iii Touring	2300	2008	2010	T1210444	**100609351**	
Rocket 2300 Iii Touring Abs	2300	2011	2013	T1210444	**100609351**	
Rocket 2300 Iii X Roadster Abs	2300	2015	2016	T1210444	**100609351**	
YAMAHA						
Mt125	125	2015	2016	38BE34400000	**100609380**	
Mt125A	125	2015	2017	38BE34400000	**100609380**	
Vp X-City	125	2008	2011	5YPE34400000	**100609380**	
Wr125R	125	2009	2011	5YPE34400000	**100609380**	
Wr125X	125	2009	2014	5YPE34400000	**100609380**	
Xv Virago	125	1997	2000	4X7134409000	**100609290**	
Yp125R X-Max	125	2006	2016	38BE34400000	**100609380**	
Yp125R X-Max Abs	125	2011	2011	5YPE34400000	**100609380**	
Yp125Ra X-Max Abs	125	2013	2017	38BE34400000	**100609380**	
Yzf-R125	125	2008	2016	38BE34400000	**100609380**	
Yzf-R125A	125	2015	2017	38BE34400000	**100609380**	
Sr Classic	250	1996	1996	4X7134409000	**100609290**	
Xv H Virago	250	1989	1989	4X7134409000	**100609290**	
Xv S Virago	250	1997	1999	4X7134409000	**100609290**	
Xv Virago	250	1991	1996	4X7134409000	**100609290**	
Sr400	400	2014	2016	4X7134400100	**100609290**	
Yp400 Majesty	400	2004	2011	5RU134400000	**100609050**	
Yp400 Majesty Abs	400	2007	2011	5RU134400000	**100609050**	
Yp400R X-Max	400	2013	2016	5RU134400000	**100609050**	
Yp400R X-Max Momodesign	400	2014	2014	5RU134400000	**100609050**	
Yp400Ra X-Max Abs	400	2014	2017	5RU134400000	**100609050**	
Yp400Ra X-Max Ironmax Abs	400	2016	2016	5RU134400000	**100609050**	
Yp400Ra X-Max Momodesign Abs	400	2014	2014	5RU134400000	**100609050**	
Xp T-Max	500	2001	2011	5DM134400000	**100609081**	
Xp T-Max Abs	500	2005	2011	5DM134400000	**100609081**	
Xp T-Max Abs Sv	500	2010	2011	5DM134400000	**100609081**	
Xp T-Max Black Max	500	2006	2006	5DM134400000	**100609081**	
Xp T-Max Black Max-Night Max	500	2007	2007	5DM134400000	**100609081**	
Xp T-Max Sv	500	2011	2011	5DM134400000	**100609081**	
Xp T-Max White Max	500	2010	2010	5DM134400000	**100609081**	
Xt	500	1976	1977	4X7134409000	**100609290**	
T-Max	530	2017	2019	5GH134406000	**100609351**	
Xp T-Max	530	2012	2016	5DM134400000	**100609081**	
Xp T-Max Abs	530	2012	2016	5DM134400000	**100609081**	
Xp T-Max Sp	530	2015	2015	5DM134400000	**100609081**	
Xp T-Max Sp Abs	530	2015	2016	5DM134400000	**100609081**	

Modello *Model*	CC	Da *From*	A *To*	OEM	Codice RMS *RMS Code*	Note *Notes*
Xv Dx Virago	535	1999	2001	4X7134409000	**100609290**	
Xv Se Virago	535	1988	1988	4X7134409000	**100609290**	
Xv Virago	535	1989	1998	4X7134409000	**100609290**	
Xt	550	1982	1983	4X7134409000	**100609290**	
Xz550	550	1982	1985	4X7134409000	**100609290**	
Fz6	600	2007	2008	5GH134402000	**100609351**	
Fzr	600	1989	1990	1L9134411100	**100609641**	
Fzr	600	1991	1993	3FV134400000	**100609511**	
Fzr R	600	1994	1995	3FV134401000	**100609501**	
Fzs Fazer	600	1998	2003	5DM134400000	**100609081**	
Fzs Fazer (Fzs600S)	600	2000	2001	5DM134400000	**100609081**	
Srx	600	1986	1987	4X7134409000	**100609290**	
Tt E	600	1994	2001	4X7134409000	**100609290**	
Tt K	600	1993	1996	4X7134409000	**100609290**	
Tt N	600	1985	1988	4X7134409000	**100609290**	
Tt R	600	2000	2002	4X7134409000	**100609290**	
Tt Re	600	2004	2004	4X7134409000	**100609290**	
Tt W	600	1989	1992	4X7134409000	**100609290**	
Tt600R	600	1998	1999	4X7134409000	**100609290**	
Xj N	600	1995	2001	3FV134401000	**100609501**	
Xj S Diversion	600	1992	1993	3FV134401000	**100609501**	
Xj S Diversion	600	1994	1996	3FV134400000	**100609511**	
Xj S Diversion	600	1997	2002	3FV134401000	**100609501**	
Xj6	600	2009	2015	5GH134405000	**100609351**	
Xt	600	1984	1990	4X7134409000	**100609290**	
Xt E	600	1990	2002	4X7134409000	**100609290**	
Xt K	600	1991	1993	4X7134409000	**100609290**	
Xt Z Tenere	600	1983	1990	4X7134409000	**100609290**	
Yzf R Thunder Cat	600	1996	2002	3FV134401000	**100609501**	
Yzf-R6	600	1999	2000	3FV134401000	**100609501**	
Yzf-R6	600	2006	2019	5GH134406000	**100609351**	
Xvs A Drag Star Classic	650	1998	2006	4X7134400100	**100609290**	
Xvs Drag Star	650	1997	2002	4X7134409000	**100609290**	
Mt-03	660	2006	2012	4X7134400100	**100609290**	
Szr	660	1995	1997	4X7134409000	**100609290**	
Xt660R	660	2004	2014	4X7134400100	**100609290**	
Xt660X	660	2004	2014	4X7134409000	**100609290**	
Xt660Z Tenere	660	1991	2015	4X7134409000	**100609290**	
Xt660Za Tenere	660	2011	2011	4X7134400100	**100609290**	
Mt-07	700	2014	2019	5GH134406000	**100609351**	
Xsr	700	2016	2018	5GH134406000	**100609351**	
Fz	750	1986	1990	36Y134410000	**100609531**	
Fzx	750	1988	1988	36Y134410000	**100609531**	
Xtz Super Tenere	750	1990	1995	4X7134409000	**100609290**	
Xv Virago	750	1992	1996	4X7134409000	**100609290**	
Yzf R	750	1993	1996	3FV134400000	**100609511**	
Yzf R7 Ow02	750	1999	2000	3FV134401000	**100609501**	
Yzf Sp	750	1993	1995	3FV134400000	**100609511**	
Fz8	800	2011	2015	5GH134405000	**100609351**	
Mt-09	850	2014	2019	5GH134406000	**100609351**	
Niken	850	2018	2019	5GH134406000	**100609351**	
Tdm	850	1991	2001	4X7134409000	**100609290**	
Trx	850	1996	1997	4X7134409000	**100609290**	
Xs850	850	1980	1980	1J7134409100	**100609811**	
Xsr	850	2016	2019	5GH134406000	**100609351**	
Xj S Diversion	900	1995	1996	3FV134401000	**100609501**	
Xj S Diversion	900	1997	2001	3FV134400000	**100609511**	
Scr	950	2017	2017	5GH134406000	**100609351**	

Modello *Model*	**CC**	**Da** *From*	**A** *To*	**OEM**	**Codice RMS** *RMS Code*	**Note** *Notes*
Xv	950	2009	2017	5GH134406000	**100609351**	
Fz1	1000	2006	2012	5GH134402000	**100609351**	
Fzr	1000	1987	1990	36Y134410000	**100609531**	
Fzr	1000	1991	1995	3FV134400000	**100609511**	
Gts	1000	1993	1993	3FV134400000	**100609511**	
Gts A (Abs)	1000	1993	1993	3FV134400000	**100609511**	
Mt-10	1000	2016	2019	5GH134406000	**100609351**	
Xv Se Virago	1000	1988	1988	4X7134409000	**100609290**	
Yzf R Thunder Ace	1000	1996	2000	3FV134401000	**100609501**	
Yzf-R1	1000	1998	1999	3FV134401000	**100609501**	
Yzf-R1	1000	2007	2019	5GH134406000	**100609351**	
Bt Bulldog	1100	2002	2006	4X7134409000	**100609290**	
Xv Virago	1100	1989	1997	4X7134409000	**100609290**	
Xvs A Drag Star Classic	1100	2000	2006	4X7134400100	**100609290**	
Xvs Drag Star	1100	1999	2002	4X7134409000	**100609290**	
Fj	1200	1986	1992	36Y134410000	**100609531**	
Fj A (Abs)	1200	1991	1991	36Y134410000	**100609531**	
Super Tenere	1200	2010	2019	5GH134406000	**100609351**	
V-Max	1200	1986	1993	1J7134411000	**100609811**	
V-Max	1200	1996	2000	3FV134401000	**100609501**	
Xjr	1200	1995	1997	36Y134410000	**100609531**	
Xvz 12Td	1200	1988	1988	1J7134411000	**100609811**	
Fjr	1300	2013	2018	5GH134406000	**100609351**	
Fjr1300	1300	2001	2004	5JW134400000	**100609681**	
Fjr1300A	1300	2016	2016	5GH134405000	**100609681**	
Fjr1300A Abs	1300	2003	2015	5JW134400000	**100609681**	
Fjr1300Ae	1300	2014	2016	5GH134405000	**100609681**	
Fjr1300As	1300	2006	2016	5JW134400000	**100609681**	
Xjr1300	1300	2002	2013	36Y134410000	**100609531**	
Xjr1300C	1300	2015	2016	36Y134410000	**100609531**	
Xjr1300Sp	1300	1999	2001	36Y134410000	**100609531**	
Xvs	1300	2011	2016	5GH134405000	**100609351**	
Xvs1300A Midnight Star	1300	2007	2016	5DM134400000	**100609081**	
Xvz 13Td	1300	1989	1990	1J7134411000	**100609811**	
Xvz Royal Star	1300	1996	2000	3FV134401000	**100609501**	
Xvz Tf Royal Star Venture	1300	2000	2000	3FV134400000	**100609511**	
Xv A Wild Star	1600	1999	2002	3FV134401000	**100609501**	
Mt-01	1700	2005	2009	3FV134401000	**100609501**	
Mt-01S	1700	2009	2009	3FV134401000	**100609501**	
Xv Warrior	1700	2003	2004	3FV134401000	**100609501**	
Xv	1900	2013	2013	5GH134402000	**100609351**	
Xv1900 Midnight Star	1900	2006	2006	3FV134401000	**100609501**	
Xv1900A Midnight Star	1900	2007	2009	3FV134401000	**100609501**	



PIAGGIO R.O. 830424 • 222721

100609010

Ø (mm)	H (mm)	HIFLO	CHAMPION
96	96,5	-	-



APRILIA R.O. AP0256450 • AP0256451
BMW R.O. 11417651414
PEUGEOT R.O. 737492

100609021

Ø (mm)	H (mm)	HIFLO	CHAMPION
41	33	HF185	COF085



ITALJET R.O. 210410229
PIAGGIO R.O. 410229

100609031

Ø (mm)	H (mm)	HIFLO	CHAMPION
33	36	HF181	COF081



APRILIA R.O. AP8580128
BENELLI R.O. R13440421A0
DERBI - GILERA R.O. 82635R
ITALJET R.O. 210483727
MALAGUTI R.O. 46400200
PEUGEOT R.O. 756162
PIAGGIO R.O. 82635R

100609041

Ø (mm)	H (mm)	HIFLO	CHAMPION
52	65	HF183	COF083



SUZUKI R.O. 16510-24501-000 • 16510-25C00-000
SYM R.O. 15400L4A000
YAMAHA R.O. 5RU134400000

100609050

Ø (mm)	H (mm)	HIFLO	CHAMPION
44	55	HF132	COF032



HYOSUNG R.O. 1651005240HAS
SUZUKI R.O. 16510-05240-000

100609061

Ø (mm)	H (mm)	HIFLO	CHAMPION
44	40	HF131-971	COF031



APRILIA R.O. AP8560163
GILERA R.O. 82960R
PEUGEOT R.O. 759749
PIAGGIO R.O. 82960R

100609071

Ø (mm)	H (mm)	HIFLO	CHAMPION
76	57	HF184	COF084



KYMCO R.O. 00128045
YAMAHA R.O. 5DM134400000

100609081

Ø (mm)	H (mm)	HIFLO	CHAMPION
68	50	HF147	COF047



DUCATI R.O. 44440035A • 090549960

100609101

Ø (mm)	H (mm)	HIFLO	CHAMPION
76	72	HF153	COF053



MICROCAR: Lombardini motore LDW502
PIAGGIO R.O. 850284 • 112397L

100609140

Ø (mm)	H (mm)	HIFLO	CHAMPION
76	61,5	-	-



MOTO GUZZI R.O. GU3015300

100609151

Ø (mm)	H (mm)	HIFLO	CHAMPION
76	90	HF551	COF451



BMW R.O. 1421337572

100609171

Ø (mm)	H (mm)	HIFLO	CHAMPION
41	128	HF161	COF061



MOTO GUZZI R.O. GU27153085

100609180

Ø (mm)	H (mm)	HIFLO	CHAMPION
45	104,5	-	-



GAS GAS R.O. MFS450622565CT
HONDA R.O. 15410KF0020
KAWASAKI R.O. 520101053 • 520100552

100609191

Ø (mm)	H (mm)	HIFLO	CHAMPION
50	38	HF112-113	COF013



APRILIA R.O. AP0256185

100609201

Ø (mm)	H (mm)	HIFLO	CHAMPION
56	53	HF151	COF051



BETA
HUSABERG
KTM R.O. 58038005000
POLARIS (ATV) R.O. 2520754

100609211

Ø (mm)	H (mm)	HIFLO	CHAMPION
41	69	HF155	COF055



HONDA R.O. 15410MJO003

100609241

Ø (mm)	H (mm)	HIFLO	CHAMPION
80	80	HF202	COF102



SUZUKI R.O. 16510-45040-000

100609271

Ø (mm)	H (mm)	HIFLO	CHAMPION
72	64	HF133	COF033



APRILIA R.O. AP8520017
DERBI R.O. 862371
YAMAHA R.O. 4X7134409000 • 4X7134400100

100609290

Ø (mm)	H (mm)	HIFLO	CHAMPION
41	58	HF145	COF045



HONDA R.O. 154A1413000

100609321

Ø (mm)	H (mm)	HIFLO	CHAMPION
69	45	HF111	COF011



ARCTIC
HONDA R.O. 15410MFJD01
KAWASAKI R.O. 160971063 • 160971072
SUZUKI R.O. K1609-71072-000
TRIUMPH R.O. T1210444

100609351

Ø (mm)	H (mm)	HIFLO	CHAMPION
65	64	HF204	COF104



AIXAM

100609360

Ø (mm)	H (mm)	HIFLO	CHAMPION
65	72	-	-



KYMCO R.O. 00124759

100609370

Ø (mm)	H (mm)	HIFLO	CHAMPION
44	79	HF562	COF462



YAMAHA R.O. 5YPE34400000

100609380

Ø (mm)	H (mm)	HIFLO	CHAMPION
38	46	HF141-142	COF041-042



KAWASAKI R.O. 16099004

100609410

Ø (mm)	H (mm)	HIFLO	CHAMPION
55	57	HF123	COF023



UFI

MOTO GUZZI R.O. GU19153000

100609420

Ø (mm)	H (mm)	HIFLO	CHAMPION
45	89	-	-



BETA
SUZUKI R.O. 16510-38240-000

100609450

Ø (mm)	H (mm)	HIFLO	CHAMPION
60	33	HF136	COF036



DAELIM R.O. 15412KN69612
LML

100609470

Ø (mm)	H (mm)	HIFLO	CHAMPION
38	38	HF167	COF067



KAWASAKI R.O. 52010Y001
KYMCO R.O. 00115058

100609480

Ø (mm)	H (mm)	HIFLO	CHAMPION
44	42	HF566	COF466



APRILIA R.O. AP3HAA000309

100609490

Ø (mm)	H (mm)	HIFLO	CHAMPION
41	35	HF186	COF086

FILTRI OLIO

OIL FILTERS



KAWASAKI R.O. 160970008 • 160970004
YAMAHA R.O. 3FV134401000

100609501

Ø (mm)	H (mm)	HIFLO	CHAMPION
65	73	HF303	COF203



APRILIA R.O. 857187
CAGIVA R.O. 800096226 • 8000A6527
KAWASAKI R.O. 52010S005
KYMCO R.O. 00115041
SUZUKI R.O. 16510-03G00-X07
YAMAHA R.O. 3FV134400000

100609511

Ø (mm)	H (mm)	HIFLO	CHAMPION
68	65	HF138	COF038



HONDA ATV R.O. 15412MEN671
HUSQVARNA R.O. 8000A7019

100609521

Ø (mm)	H (mm)	HIFLO	CHAMPION
38	36	HF116	COF016



KAWASAKI R.O. 16099003
YAMAHA R.O. 36Y134410000

100609531

Ø (mm)	H (mm)	HIFLO	CHAMPION
76	56	HF401	COF301



BETA
KTM R.O. 59038046000
POLARIS

100609541

Ø (mm)	H (mm)	HIFLO	CHAMPION
41	52	HF157	COF057



BMW R.O. 11427673541

100609551

Ø (mm)	H (mm)	HIFLO	CHAMPION
76	54	HF164	COF064



BUELL
HARLEY DAVIDSON R.O. 6373199

100609561

Ø (mm)	H (mm)	HIFLO	CHAMPION
76	92	HF171	COF071B



BETA R.O. 1526060000
KAWASAKI R.O. 520100001
SUZUKI R.O. 16510-35G00-000

100609571

Ø (mm)	H (mm)	HIFLO	CHAMPION
38	44	HF207	COF107



APRILIA R.O. AP0256187

100609581

Ø (mm)	H (mm)	HIFLO	CHAMPION
56	74	HF152	COF052



HUSABERG
KTM R.O. 77338005100

100609591

Ø (mm)	H (mm)	HIFLO	CHAMPION
33	87	HF652	COF552



HUSABERG
KTM R.O. 77038005001

100609601

Ø (mm)	H (mm)	HIFLO	CHAMPION
41	69	HF655	COF555



SUZUKI R.O. 16510-29F00-000

100609621

Ø (mm)	H (mm)	HIFLO	CHAMPION
44	44	HF139	COF039



YAMAHA R.O. 1L9134411100

100609641

Ø (mm)	H (mm)	HIFLO	CHAMPION
76	41	HF144	COF044



SUZUKI R.O. 16510-37450-000

100609651

Ø (mm)	H (mm)	HIFLO	CHAMPION
60	37	HF137	COF037



KTM R.O. 58338045100

100609661

Ø (mm)	H (mm)	HIFLO	CHAMPION
65	75	HF156	COF056



KTM R.O. 60038015100

100609671

Ø (mm)	H (mm)	HIFLO	CHAMPION
41	130	HF158	COF058



YAMAHA R.O. 5JW134400000

100609681

Ø (mm)	H (mm)	HIFLO	CHAMPION
65	85	HF148	COF048



BMW R.O. 11427719357
HUSQVARNA R.O. 7719357

100609691

Ø (mm)	H (mm)	HIFLO	CHAMPION
76	62	HF160	COF060



HARLEY DAVIDSON R.O. 6378280

100609721

Ø (mm)	H (mm)	HIFLO	CHAMPION
76	68	HF172	COF072C



HARLEY DAVIDSON R.O. 6379301K

100609731

Ø (mm)	H (mm)	HIFLO	CHAMPION
76	86	HF174	COF074



BUELL R.O. 6380600Y

100609741

Ø (mm)	H (mm)	HIFLO	CHAMPION
65	73	HF177	COF077



PEUGEOT R.O. 778117
TRIUMPH R.O. T1210200

100609751

Ø (mm)	H (mm)	HIFLO	CHAMPION
68	65	HF191	COF091



BENELLI R.O. R180107101000

100609761

Ø (mm)	H (mm)	HIFLO	CHAMPION
65	65	HF553	COF453



BMW R.O. 11427715456
HUSQVARNA R.O. 7715456
SHERCO R.O. 0116

100609781

Ø (mm)	H (mm)	HIFLO	CHAMPION
41	87	HF611	COF511



MV AGUSTA R.O. 8000B1552

100609791

Ø (mm)	H (mm)	HIFLO	CHAMPION
65	65	HF554	COF454



APRILIA R.O. AP9150166
HUSQVARNA R.O. 8000B0593
PIAGGIO R.O. 880887

100609801

Ø (mm)	H (mm)	HIFLO	CHAMPION
45	49	HF563	COF082-463



YAMAHA R.O. 1J7134411000

100609811

Ø (mm)	H (mm)	HIFLO	CHAMPION
101	40	HF146	COF046



PIAGGIO R.O. 438038

100609821

Ø (mm)	H (mm)	HIFLO	CHAMPION
68	66	-	COF100180S



KYMCO R.O. 00115103

100609880

Ø (mm)	H (mm)	HIFLO	CHAMPION
44	46	HF568	COF468



121730010

SERBATOIO OLIO | *OIL TANK*
Con indicatore riserva | *With reserve indicator*

PIAGGIO 220: Ape TM602 • Ape TM703-P703V • Ape FL2 • Ape TM • Ape MP P501-P601
R.O. 263449



121730033

SERBATOIO OLIO | *OIL TANK*

PIAGGIO 125: Vespa PX • Vespa PX 11-16 • Vespa PX 30 Anni • Vespa PXE Arcobaleno • Vespa T5
PIAGGIO 150: Vespa PX • Vespa PX 11-16 • Vespa PXE Arcobaleno
PIAGGIO 200: Vespa PX • Vespa PXE Arcobaleno
R.O. 623139





121710020

SPIA OLIO VESPA | *OIL BOWL*
Confezione 5 Pz. | *5 Pcs Packing*

PIAGGIO: Vespa PXE 125-150-200 Arcobaleno • Vespa PX T5 125 • Vespa PX 125 anni 30 • Vespa PX 125 -150 • Rally 200
R.O.623140 • 155526



121710030

SONDA LIVELLO OLIO | *OIL SENSOR LEVEL*

PIAGGIO 50: Free Delivery 00-01 • Free FL 95-02 • Free 92-94 • Zip Bimodale 94-97 • Zip Fast Raider RST 96-97 • Zip Fast Raider 93-94 • Zip RST 96-99 • Zip SP 96-00 • Zip 92-96
R.O. 259007



121650053

TAPPO OLIO MISCELATORE | *OIL TANK CAP*

PIAGGIO 125-150-200: Vespa PX • PXE Arcobaleno - PX T5
R.O. 102585



121856070

TAPPO SCARICO OLIO MOTORE | *ENGINE OIL CUP*
Confezione 5 Pz. | *5 Pcs Packing*

PIAGGIO-GILERA: Scooter 50-125-150
R.O. 138345



121856140

TAPPO OLIO | *OIL FILLER CAP*
Confezione 5 Pz. | *5 Pcs Packing*

HONDA 150: Sh
R.O. 12361-KGF-305



121860010

TAPPO OLIO | *OIL PLUG*
Vari Modelli Vespa | *Various Vespa Models*
Confezione 10 Pz. | *10 Pcs Packing*

R.O. 030280





121678010

RACCORDO OLIO | *OIL PIPE CONNECTING PICE*

GILERA 50: Eaglet - Eaglet Automatico 96-97 • Ice 01 • Easy Moving 95-96 • Stalker • Storm • Dna 97-01 • Runner • Runner FL • Runner Purejet • Runner Poggiali 97-02 • Typhoon X-Xr 98-00
GILERA 125: Typhoon-Typhoon Xr 94-00 • Runner Fx-Fxr 97-02
GILERA 180: Runner Fx-Fxr 97-02
PIAGGIO 50: Ape RST Mix 99-03 • Free • Free Delivery • Free FL 92-01 • Liberty 97-02 • NRG Purejet • NRG Extreme 99-02 • NRG RST MC2 96-98 • Puch P1-Tre 93-98 • Sfera Maquillage 2 • Sfera Base • Sfera RST 91-97 • Vespa ET2 Iniezione 97-01 • Vespa FL2 Automatica 90-91 • Vespa PK XL Plurimatic 85-90 • Velofax 96-99 • Quartz 92-96 • Typhoon 01 • Zip Fast Rider 93-99 • Zip 94-97 • Vespa PK S Automatica 84-89
PIAGGIO 80: Skr City 99
PIAGGIO 125: Hexagon Lx4 98-99 Vespa Pk Automatica 84-89 • Vespa Pk S Automatica 84-89 • Skipper • Skipper LX 94-99 • Cosa 2 • Cosa CL • Cosa CLX 88-97
PIAGGIO 150: Skipper • Skipper Lx 94-99 • Cosa 2 - Cosa CL • Cosa CLX 88-97
PIAGGIO 200: Cosa 2 • Cosa CL • Cosa CLX 88-97
R.O. 574362



121859110

RONDELLA GROWER IN ALLUMINIO | *ALLOY GROWER WASHER*
12x20x2 Per Tappo Olio | *12x20x2 For Oil tap*
Confezione 10 Pz. | *10 Pcs Packing*
HONDA 300: Sh



POMPE OLIO | *OIL PUMPS*

100110100 NEW

POMPA OLIO | *OIL PUMP*
Miscelatore Scooter
MINARELLI • MBK • YAMAHA 50cc





APRILIA 50: Scarabeo 4T Restyling Euro3 06-09 • Scarabeo Quattro 09 • Scarabeo 4T 4V 02-06 • Scarabeo 4T 4V 10-17 • Scarabeo 4T 4V Net 09-10 • Sport City One 4T 08-10 • SR Motard 4T 4V 13-19
APRILIA 100: Scarabeo 4T 01-05 • Scarabeo 4T 10-14 • Scarabeo 4T Restyling 06-09 • Scarabeo 4T Net 09 • Scarabeo 4T Net Euro3 10
APRILIA 125: Mojito Retrò - Custom 99-01
DERBI 50: Atlantis 4T 04-07 • Boulevard 4T EU2 25 Km/h 09
DERBI 100: Boulevard 4T 10-11
PIAGGIO 50: Fly 4T 05-14 • Liberty 4T 00-14 • Vespa LX 4T 05-08 • Vespa LX 4T 4V 09-14 • Vespa Primavera 4T 4V 13-14 • Vespa Sprint 4T 4V 14 • Zip 4T 00-13
PIAGGIO 100: Fly 4T 06-14 • Free 02-03 • Zip 4T 06-10
PIAGGIO 125: Hexagon LX4 98-99 • Liberty 98-00 • Sfera 95-97 • Vespa ET4 96-98
R.O. 434447

163712220

MODELLO - *MODEL*
25H



APRILIA 125: Atlantic Euro3 06-12 • Atlantic 03-05 • Mojito 03-08 • Scarabeo 03-06 • Sport City Cube 08-10 • Sport City Euro3 04-08 • Sport City One 4T 08-11 • Sport City Street 12 • SR Max 11-14 • SR Motard 12-14
APRILIA 250: Scarabeo Light 06-08 • Scarabeo 04-06 • Sport City Cube 08-12 • Sport City Euro3 06-08 • Atlantic 03-05 • Atlantic Euro3 06-08
APRILIA 300: Atlantic 10-12 • Scarabeo Light 09-10 • Sport City Street 12 • SR Max 11-14 • Sport City Cube 08-12
DERBI 125: Boulevard 02-04 • Boulevard Euro2 04-07 • Boulevard 4T Euro3 08-12 • GP1 06 • GP1 Low Seat Euro3 07-08 • Rambla 08-09 • Sonar 09-11 • Variant Sport 4T Euro3 12
DERBI 150: Boulevard 02-04 • Boulevard Euro2 04-07 • Boulevard 4T Euro3 08-12 • Sonar 09-11
DERBI 200: Boulevard Euro2 05-06
DERBI 250: GP1 06 • GP1 Low Seat Euro3 07-08 • Rambla 08-09
DERBI 300: Rambla 10-11
GILERA 125: DNA 01 • Nexus Euro3 07-10 • Runner 4T ST Euro3 08-11 • Runner VX-VXR 02-04 • Runner VX 05-07
GILERA 180: DNA 01 • Runner VX-VXR 02-04
GILERA 200: Runner 4T ST Euro3 08-11 • Runner VX-VXR 02-04 • Runner VXR 05-07
GILERA 250: Nexus Euro3 06-07 • Nexus SP Euro3 06-07 • ORegon 06-10
GILERA 300: Nexus Euro3 08-11
PIAGGIO 125: Beverly 01-13 • Fly 05-11 • Liberty 4T 01-12 • Mp3 06-12 • Skipper 4T 00-02 • Vespa Et4 99-02 • Vespa GTS 03-12 • Vespa GTV 06-08 • Vespa LX 05-11 • Vespa S 4T 07-11 • X Evo 07-12 • X10 4T 4V 12-13 • X7 08-10 • X8 04-07 • X9 01-07 • Zip 00-02
PIAGGIO 150: Fly 05-11 • Liberty 08-13 • Vespa LX 05-12 • Vespa S 4T 08-12 • X8 06-08
PIAGGIO 180: X9 00-03
PIAGGIO 200: Carnaby 07-08 • Liberty 04-08 • Vespa GTS 06-07 • X8 05-07 • X9 02-03
PIAGGIO 250: Beverly 04-09 • Carnaby 08 • MP3 06-09 • Vespa GTS 05-14 • Vespa GTV 06-09 • X Evo 07-13 • X7 08 • X8 05-08 • X9 04-08
PIAGGIO 300: Beverly 09-14 • Carnaby Cruiser 09-12 • MP3 10-14 • Vespa GTS 08-14 • Vespa GTV 09-10 • X7 Evo 09-10
R.O. 82649R

163712230

MODELLO - *MODEL*
25H



APRILIA

100110010

Con paraolio doppia tenuta | *With special watertight seal*

MOTORI MINARELLI 50



100110200

Con paraolio doppia tenuta e completo di disco traino | *With special watertight seal including water pump plate*

MOTORI MINARELLI 50



100110080

MOTORI MINARELLI 50 AM3-4-5-6



100110160

50: SR Ditech Euro2 02-03 • SR H2O Ditech e Carburatore 00-03 • SR R Factory Motore Aprilia 05



100110230

125: Atlantic Euro3 06-08 • Scarabeo Euro3 06-07 • Sport City Euro3 06-08
200: Scarabeo Euro3 06-07 • Sport City Euro3 06-08



100110170

125: Leonardo 96-01 • Scarabeo Motore Rotax 99-03
150: Leonardo 96-01 • Scarabeo Motore Rotax 99-03
200: Scarabeo Motore Rotax 99-03



100110300

250: Leonardo 99-01 • Leonardo ST 01





KIT REVISIONE POMPA ACQUA

WATER PUMP REPAIR KITS

BETA

100110080

MOTORI MINARELLI 50 AM3-4-5-6



DERBI

100110320

50: Senda R DRD Pro Euro2 05-09 • Senda R DRD Racing Euro2 05-08 • Senda R X-Race Euro2 07-09 • Senda R X-Treme Euro2 08 • Senda SM DRD Pro Euro2 05-08 • Senda SM X-Treme Euro2 08 • Senda SM X-Race Euro2 07-09



100110240

50: Atlantis LC 99-01 • Predator LC 98-01



100110250

50: GPR Nude 04-05 • GPR Racing 04-05 • Senda R 99-01 • Senda R DRD Racing 04-05 • Senda R Racer 03 • Senda SM 00-01 • Senda SM X-Race 04-05



GILERA

100110020

50: Dna 00-02 • Runner 97-00 • Runner Purejet 02-07 • Runner SP 02-07



100110230

125: Nexus Euro3 07-08 • Runner VX 4T Euro3 07



100110070

125: DNA 01 • Runner VX-VXR 00-01
180: DNA 01 • Runner VX-VXR 00-04





100110030

125-180: Runner FX-FXR 97-02



100110210

250: Nexus Euro3 06-07 • Oregon 06-08
300: Nexus Euro3 08-09



HONDA

100110180

125-150: Pantheon 2T 98-02



100110190

125-150: Chiocciola 00-06 • SH 125 01-08



100110510

125-150: PCX



100110310

250: Foresight 98



100110520

300: SH 07-14



KYMCO

100110480

50: B&W Euro2 03 • B&W 02 • Dink Lc 98-02 • Super 9 00-04



100110470

125-150: B&W Euro2 03-04 • B&W 00 • Dink 97-98 • Dink Classic 02-03 • Dink LX 98-00 • Gran Dink 01-02
200: Dink Classic 04



100110490

200: Downtown i 10 • People Gti 10
300: Downtown Abs 10-11 • Downtown i 11 • K-Xct i 12-14 • People GTI 10-12





KIT REVISIONE POMPA ACQUA

WATER PUMP REPAIR KITS

100110460

250: B&W 00 • B&W Euro2 03 • Gran Dink 01-02 • Gran Dink Euro2 03-04 • People LC 03-04 • People S 06 • People S i 07 • X-Citing 05 • X-Citing 06-07 • Yup 03
300: People S i 08 • X-Citing i 08 • X-Citing i R 08-09



100110550

400: X-Citing i 13 • X-Citing i Abs 14



100110500

700: Myroad i 11



MBK

100110430

50: Nitro 97-02 • Nitro Euro2 03



100110010

Con paraolio doppia tenuta | *With special watertight seal*

MOTORI MINARELLI 50



100110200

Con paraolio doppia tenuta e completo di disco traino | *With special watertight seal including water pump plate*

MOTORI MINARELLI 50



100110090

125: Skyliner 98-03
150: Skyliner 00-02
180: Skyliner 03





PEUGEOT

100110080

MOTORI MINARELLI 50 AM3-4-5-6



100110530

50: Speedfight • X-Fight • X-Race • X-Team 2
R.O. 734428-743278



100110570 NEW

50: Ludix
R.O. 777258



PIAGGIO

100110020

50: NRG 94-96 • NRG Purejet 02-04 • Quartz 92-96 • Zip SP 96-00



100110230

125: Beverly RST 06-07 • Vespa Granturismo 06-07 • X8 05-06 • X9 Evolution 05-06
200: Vespa GT 06-07 • X8 05-07



100110070

125: Beverly 01-03 • Beverly RST 04-05 • Hexagon GTX 00 • Vespa Gt 03-05 • X9 01-02 • X9 Evolution 03
180: Hexagon GTX 00
200: Beverly 01-03 • Vespa Granturismo 03-05



100110030

125: Hexagon 94-97 • Hexagon LX-LXT 98-99
150: Hexagon 94-97
180: Hexagon LX-LXT 98-99



100110220

250: Beverly RST 04-05



100110210

250: Beverly 06-07 • Beverly Tourer Euro3 08-09 • Carnaby 08 • MP3 06-08 • Vespa GTV 4T Euro3 08 • X7 Euro3 08 • X8 Euro3 05-08 • X9 Evolution 04
300: Beverly ie Tourer 09 • Carnaby Cruiser 09 • MP3 ie MIC 10 • Vespa GTS Super 08 • X7 Evo ie Euro3 09





KIT REVISIONE POMPA ACQUA

WATER PUMP REPAIR KITS

100110440

250: Carnaby 08 • MP3 06-09 • Vespa GT 60 06-07 • Vespa GTS 05-13 • Vespa GTV 06-09 • X7 Euro3
300: Beverly RST 4T 4V ie 10-14 • Beverly Tourer Euro3 09-10 • Carnaby Cruiser 09-12 • MP3 10-13 • MP3 Yourban 11-12 • Vespa GTS 08-13 • Vespa GTV 10-13 • X7 Evo ie Euro3 09-10



100110450

500: Beverly Cruiser 07-12 • MP3 LT Business ABS 14-16 • MP3 LT Sport - Business 14-16 • MP3 RL Sport - Business 11-12 • MP3 Sport ABS 14-15 • X10 4T 4V ie Euro3 12-14
R.O. 872536



SUZUKI

100110150

50: Katana I Serie 97-00



100110260

125: Epicuro 99-01
150: Burgman 02-06 • Epicuro 99-01
250: Burgman 98-02 • Burgman 03-06
400: Burgman 03-06 • Burgman 99-02



100110410

400: Burgman 07-08



YAMAHA

100110010

Con paraolio doppia tenuta | *With special watertight seal*

MOTORI MINARELLI 50



100110200

Con paraolio doppia tenuta e completo di disco traino | *With special watertight seal including water pump plate*

MOTORI MINARELLI 50



100110430

50: Aerox 97-10 • Aerox Euro2 03





100110080

Motori Minarelli 50 cc Am3 • Am4 • Am5 • Am6



100110560

50: Neo's 4T



100110090

125: Majesty 98-09
150: Majesty 00-02
180: Majesty 03-06



100110350

125: X-City • X-Max



100110540

125: Xenter 12-14 • Xcr 12 • Majesty S
150: Xenter 12-14



100110270

250: Majesty 00-03



100110280

400: Majesty 04-08 • Majesty ABS 07-08



100110290

500: T-Max 04-11



100110420

530: T-Max 12-13



100110040

KIT DISCO TRAINO GIRANTE POMPA | *WATER PUMP PLATE*

MOTORI MINARELLI 50: YAMAHA • APRILIA • MALAGUTI • MBK





APRILIA

100300300

125: Atlantic 03-05 • Scarabeo 04-06 • Sport City 06-08
250: Sport City Cube 08-12
300: Sport City Street 12 • Atlantic 10-11 • Scarabeo Light 09-10 • SR Max 11-14
400: Atlantic Sprint 05-08 • Scarabeo Light 06-08
500: Atlantic 01-04 • Scarabeo 03-06
R.O. 8494905



100300400

125: SR Max 11-14 • Sport City 06-08 • Atlantic 06-08
250: Atlantic Euro3 06-08 • Sport City Cube 08-12 • Scarabeo Light 06-08
R.O. 8477975



DERBI

100300400

125: Rambla 08-09
250: GP1 Low Seat Euro3 07-08 • Rambla 08-09
R.O. 8477975



100300300

300: Rambla 10-11
R.O. 8494905



GILERA

100300400

125: Nexus Euro3 ie 08-10
250: Nexus Euro3 06-07 • Nexus SP Euro3 06-07
R.O. 8477975



100300300

250: Oregon 06-10
300: Nexus Euro3 08-11
500: Fuoco Euro3 07-14 • Nexus 06-11
R.O. 8494905





HONDA

100300260

125: SH 05-12 • Pantheon FES 04-05 • Silver Wing FES 07-12 • PES 06-08
150: SH 05-12 • Pantheon FES 03-05
R.O. 31110-KRJ-901



100300290

250: Foresight 98-02 • Foresight 05
R.O. 31110-KFG-008



KYMCO

100300260

125: G-Dink 12
200: Dink Euro3 i 06-07 • Downtown 10 • People GTI 10-14
250: People S-Si 06-07 • X-Citing i 05-07
300: Downtown 09-11 • G-Dink 12 • K-Xct 12-14 • Maxxer 05-06 • MXU 05-10 • People GTI 10-14 • People Si 08 • X-Citing 08-09
350: Downtown 15-16
R.O. 0126013



100300280

125: Agility Carry 11 • Agility Plus 14-16 • Agility R16 08-12 • Agility RS 09 • Heroism 95-97 • Like 09-12 • Mxer 02-03 • People One 13-16 • Agility 4T 06-08 • Movie 99-04 • People 99-11 • People S 05-08 • Super 8 08-09 • Vivio 00 • Zing 97-98
150: Agility R16 08-09 • Heroism 95-97 • Vivio 00 • Zing97-98 • Mxer 04 • MXU 05-06
200: Agility R16 10-12 • Agility Plus 14-16 • Like 09-12 • People S 05-07
R.O. 00128248-00128742



100300290

200: Dink Classic 04 • Dink Euro3 i 06-07 (> 71001291)
250: B&W Euro2 00-03 • Grand Dink Euro2 01-04 • KXR 03-04 • MXU 05 • People LC 03-04 • Yup 03
300: Maxxer 05-06 (> 61100479) • MXU 05-06 (> 61000533)
R.O. 00128935



MBK

100300010

50: CS Mach G 02-04 • CW Booster 90-95 • CW Booster Spirit 96-02 • CW L Booster 01-03 • CW RSP Booster Rocket 97-98 • CW R Booster NG 95-03 • EW Stunt 00-02 • Evolis 92-95 • YH Flipper 99-04 • YA R Forte 94-96 • YM Fizz 94-95 • YN R Ovetto 97-04 • YQ Nitro 97-04
R.O. 3VL155700000



100300230

125: YP Skyliner 98-02 • XC T Flame 95-99 • XC K Flame R 96-99 • Doodo 00-01 • Thunder 01-02
150: YP Skyliner 00-02 • Doodo 01-02 • Thunder 01-02
R.O. 5NSE55700000



100300390

125-180: Skyliner 03
R.O. 5XME55700000



100300270

250: YP Skyliner 00-03 • YP Skyliner ABS 03
300: XC Kilibre 03
R.O. 4HC155900200



PIAGGIO

525260140

Ruota Libera Z 18 | *Freewheel Z 18*
50: Ciao • Ciao Mix Teen • Ciao Tre • Si FL2 • Si Mix • Bravo Erre 2
R.O. 103631



100300200

Ruota Libera Z 16 | *Freewheel Z 16*
50: Bravo • Si
R.O. 114531



100300400

125: Beverly RST 4T 4V 10-15 • MP3 08-12 • Vespa GTS 09-16 • X7 Evo 09-10
250: Beverly Cruiser 07-09 • Beverly Tourer 07-09 • Beverly 06-08 • Carnaby 08 • MP3 06-09 • Vespa GTS 05-16 • Vespa GTV 06-09 • X-Evo 07-16 • X7 08 • X8 05-08
R.O. 8477975



100300300

250: Beverly RST 04-05 • Vespa GTS 05-12 • X9 06
300: Beverly RST 4T 4V 10-15 • Beverly Tourer 09-10 • Carnaby Cruiser 09-12 • MP3 10-14 • Vespa GTS 08-16 • Vespa GTV 10-13 • X7 Evo 09-10
350: Beverly 4T 4V 11-14 • X10 4T 4V 12-15
400: Beverly 06-10 • MP3 07-11 • X-Evo 07-11 • X8 06-08
500: Beverly 02-12 • MP3 11-16 • X10 4T 4V 12-14 • X9 01-02 • X9 Evolution 03-05
R.O. 8494905





SUZUKI

100300330

125: Epicuro 99-01 • Burgman 02-06
150: Epicuro 99-01 • Burgman 02-06



100300290

200: Burgman 07-14
250: Burgman 98-06



100300370

400: Burgman 99-06



100300380

400: Burgman 07-15



YAMAHA

100300010

50: BW'S Bump 97-98 • BW'S Naked 03-16 • BW'S Next Generation 97-06 • BW'S Original 97-02 • BW'S 04-16 • CS Jog R 02-15 • CW BW'S 95-04 • NS Aerox 13-16 • YH Why 99-06 • YN Neo's 97-16 • YQ Aerox 97-12



100300230

125: Beluga 90-95 • Cygnus 95-98 • Teo's 00 • Maxster 01-02 • Majesty 98-02
150: XC Fly One 90-95 • Teo's 01-02 • Maxster 01-02 • Majesty 00-02
R.O. 5NSE55700000



100300250

125: YP X-City 08-11 • YP R X-Max 06-16
R.O. 1B9E55800000





100300390

125: Majesty 03-09
180: Majesty 03-06
R.O. 5XME55700000



100300270

250: X-Clty 07-15 • Majesty 96-03 • YP R X-Max 07-16
300: Versity 03-06
R.O. 4HC155900200



100300310

400: Majesty 04-11 • Yp R X-Max 13-16
R.O. 5RU155900000



100300320

500: T-Max 01-11
530: T-Max 12-14
1200: XTZ Super Tenere 10-11
1300: FJR A ABS 06-11 • FJR A 03-05 • FJR As 06-08 • FJR 01-04 • XVS A Midnight Star 07-08 • XVZ Royal Star 96-00 • XVZ TF Royal Star Venture 00
1700: V-Max 09-10
R.O. 5NK155900000





SETTORI MESSA IN MOTO - *KICK STARTER SECTOR*

100250010

MINARELLI - MBK - YAMAHA 50
R.O. 3ES156010100



100250020

APRILIA 50: Sonic 98-07 • Sonic GP 98-08
R.O. AP8206816
MALAGUTI 50: F10 Jet Line 92-98 • F10 Kat 99-00 • F10 Restyling 01-06 • Yesterday 97-00
R.O. 70104100
MBK 50: YE Evolis 92-95 • YM Fizz 94-95 • YA R Forte 94-96
R.O. 3KJ156010000
YAMAHA 50: YM Breeze 94-95 • YA R Axis 95-96
R.O. 3KJ156010000



100250600

APRILIA 50: SR R Motard 13-19 • Sport City One 2T 08-11 • Sport City One 4T 08-10 • Scarabeo Street 2T Restyling 06-09 • Scarabeo Street 05-06 • Scarabeo Quattro 09 • Scarabeo 4T 4V Net 09-10 • Scarabeo 4T 4V 10-17 • Scarabeo 2T Net 09-10 • Scarabeo 2T Euro2 Motore Piaggio 10-12 • Scrabeo 2T 14 • Mojito Custom 2T Motore Piaggio 04-10
APRILIA 100: Scarabeo 4T 01-05 • Scarabeo 4T 10-12 • Scarabeo 4T Net 09-10 • Scarabeo 4T Restyling 06-09
DERBI 50: Atlantis O2 03-06 • Atlantis 2T 07-10 • Atlantis 4T Euro2 07 • GP1 01-03 • GP1 Open 06-09 • Sonar 2T 09 • Variant Sport 2T 12
GILERA 50: DNA 00-02 • DNA 05-07 • Easy Moving 95-96 • Ice 01-05 • Runner SP 02-12 • Stalker 97-11 • Storm 94-95 • Storm Euro2 07 • Typhoon 94-97 • Typhoon X 98-99 • Typhoon XR 00
PIAGGIO 50: Diesis 01 • Free 92-94 • Free FL 95-02 • Free Delivery 00-01 • Liberty 2T 04-08 • Liberty 4T 00-17 • NTT 95-96• NRG Power DD 05-18 • NRG MC3 01-04 • NRG RST MC2 96-98 • NRG Extreme 99-00 • Quartz 92-96 • Sfera RST 95-97 • Sfera Maquillage 2 94 • Sfera 91-93 • Typhoon 01-11 • Typhoon 2T 10-18 • Vespa LX 2T 05-13 • Vespa LX 4T 05-13 • Vespa Primavera 13-17 • Vespa Sprint 14-17 • Vespa ET2 97-05 • Zip SP 96-13 • Zip 92-04 • Zip Fast Raider 93-97
R.O. 488079



100250620

PIAGGIO 125: Liberty 98-00 • Sfera RST 95-97 • Vespa ET4 96-99 • Hexagon LX4 98-99
R.O. 478723



100250630

GILERA 125: Runner FX-FXR 97-02 • Typhoon X-XR 99-00 • Typhoon 95-98
PIAGGIO 125-150: Hexagon 94-97 • Skipper 94-97 • Skipper LX 98-99 • Hexagon LX-LXT 98-99
R.O. 434087



100250640

PIAGGIO 125: Vespa ET4 99-02 • Vespa LX 05-09 • Vespa LXV 06-09 • Liberty 4T 06-15 • Zip 00-02 • Skipper 4T 00-02
PIAGGIO 150: Vespa LX 05-08 • Skipper 4T 00-02
R.O. 830284



100250660

PIAGGIO 125: Vespa T5
PIAGGIO 150: Vespa GL • Vespa Super • Vespa Sprint
PIAGGIO 180: Vespa Rally
R.O. 140920



100250680

KYMCO 50: Agility 4T Carry 11 • Agility 4T R12 07-08 • Agility RS 09 • Agility R12 05 • CX 93-97 • Dink 4T 07 • DJ 91-00 • Fever ZX 99-04 • K12 95-00 • KB 95-00 • Like 4T 09 • Super 8 07 • Super 8 4T 09 • Vitality 4T 04 People S 4T 06-08
R.O. 00106010



INGRANAGGI AVVIAMENTO - *STARTING GEARS*

100250393

INGRANAGGIO MESSA IN MOTO | *KICK STARTER GEAR*
Z12, Foro Ø20,5 mm | *Z12, Hole Ø20,5 mm*

PIAGGIO 125: Vespa PX 77-82 (> 146314) • Vespa PX T5 • Vespa PE > 81 • Vespa PXE Arcobaleno
PIAGGIO 150: Vespa PX 78-81 (> 264565)
PIAGGIO 200: Vespa Rally • Vespa PE
R.O. 113526



100250403

INGRANAGGIO MESSA IN MOTO | *KICK STARTER GEAR*
Z12, Foro Ø21,8 mm | *Z12, Hole Ø21,8 mm*

PIAGGIO 125: Vespa PX 77-82 (< 146313) • Vespa TS
PIAGGIO 150: Vespa PX 78-81 (< 264564) • Vespa Sprint • Vespa GTR • Vespa Super • Vespa GL
R.O. 089229



100250413

INGRANAGGIO MESSA IN MOTO | *KICK STARTER GEAR*
Z12-13, Foro Ø22 mm | *Z12-13, Hole Ø22 mm*

PIAGGIO 125: Vespa Super 66-68
PIAGGIO 150: Vespa Super 66-79 • Vespa P150S > 78 • Vespa 150 (VBB1-VBB2)
R.O. 058680



100250423

INGRANAGGIO MESSA IN MOTO | *KICK STARTER GEAR*
Z12, Foro Ø22 mm | *Z12, Hole Ø22 mm*

PIAGGIO 150: Vespa 59-61
R.O. 089026



BOCCOLA MESSA IN MOTO - *STARTER BUSH*

100251000

MINARELLI - MBK - YAMAHA 50



100251010

Foro interno Ø 15 mm | *Internal hole Ø 15 mm*

PIAGGIO 125: Vespa ET4 • Sfera RST • Liberty 98 • Hexagon LX4
R.O. 435027



100251020

Foro interno Ø 17 mm | *Internal hole Ø 17 mm*

APRILIA 125: SR 99-01
R.O. AP8550132
GILERA 125: Typhoon 95-98 • Typhoon X -XR 99-00 • Runner FX-FXR 97-00
GILERA 180: Runner FX-FXR 97-00
R.O. 478032
PIAGGIO 125: Skipper 94-97 • Skipper LX 98-99 • Hexagon LX-LXT 98-99 • Hexagon 94-97 • Vespa ET4 99-02
R.O. 478032



100251030

Spessore 4 mm | *Thickness 4 mm*

GILERA 50: Typhoon 94-97 • Typhoon X 98-99 • Storm 94-95 • Easy Moving 95-96
PIAGGIO 50: Sfera Maquillage 2 94 • Sfera RST 95-97 • Quartz 92-96 • NTT 95-96 • NRG 94-96 • NRG RST MC2 96-98 • Free FL 95-02 • Zip 95-96 • Zip Fast Rider RST 96-97 • Zip SP 96-00 •Vespa ET2 97-05
R.O. 433862



100251040

Per pompa Mikuni | *For Mikuni pump*

PEUGEOT 50: Buxy 94-97 • Elyseo 99 • Elystar TSDI 03 • Looxor 01-02 • Looxor TSDI 02 • Metal X 02 • Speedake 95-97 • Speedfight AC • Speedfight Kat LC 97-99 • Squab 95-97 • Vivacity 99 • Trekker 98-00 • Zenith L 94-96 • Zenith LN • Zenith N 97-98 • X-Fight 00 • X-Race 03
100: Elyseo 99-01 • Looxor 01 • SVL 98 • Speedfight 97-00 • Trekker 98 • Vivacity 99-01 • X-Fight 00-01



100251050

APRILIA 50: Scarabeo 2T 09-14 • Scarabeo 4T 4V 09-17 • Scarabeo Street 05-09 • Sport City One 2T 08-11 • Sport City One 4T 08-10 • SR Motard 2T 12-14 • SR R 04-14 • SR Street 04-12
APRILIA 100: Scarabeo 4T 01-14
GILERA 50: DNA 00-07 • DNA GP Experience 03-04 • Ice 01-05 • Runner Poggiali 02 • Runner Purejet 02-11 • Stalker 97-11 • Typhoon XR 00
PIAGGIO 50: Diesis 01 • Free Delivery 00-01 • Fly 2T • Liberty 2T RST • Liberty 4t RST 04 • Liberty 97-02 • Liberty 4T 00-02 • NRG Extreme 99-00 • NRG RST MC2 96-98 • NRG MC3 01-02 • NRG Purejet 02-04 • Vespa ET2 97-01 • Vespa ET2 Iniezione 97-00 • Vespa ET4 00-02 • Zip RST 96-99 • Zip SP 01-04 • Zip SP Euro2 00-02 • Zip 4T 00-04
PIAGGIO 100: Free 02-03 • Fly 4T 06-14 • Zip 4T 06-10
R.O. 479866





KIT INGRANAGGI AVVIAMENTO

STARTER GEARS KIT

KYMCO

100310010

125-150: Agility 4T Euro3 06-08 • Agility 4T 06 • Movie Euro3 06-07 • Movie XL Euro2 03-04 • Movie XL 01• Movie 99-00 • People Euro2 03 • People 99-00 • People Euro3 07-11 • People S DD Euro3 07-08 • People S 05 • Super 8 08-09 • Vivio 00 • Movie Euro3 06-07 • Mixer Euro2 04 • MXU 05-06
200: People Si 07 • People S 05
R.O. 00128249 - 0128730 - 0128728



100310020

250: B&W Euro2 03 • B&W 00 • Grand Dink Euro2 03-04 • Grand Dink 01-02 • KXR 03-04 • MXU 05 • People LC 03-04 • Yup 03
300: Maxxer 05-06 (> 61100480) • MXU 05-06 (> 6100052)
R.O. 00128935 - 00128933



MBK

100310120

125: XC Flame F 00 • XC K Flame R 96-99 • XC T Flame 95-99
R.O. 5NSE55700000 - 4CWE55240100



100310070

250: X-City 07-15 • Majesty 96-03 • YP R X-Max 07-16
300: Versity 03-06
R.O. 4HC155900200 - 4HC155170000





SUZUKI

100310040

125-150: Sixteen 08-11
R.O. 12649-20E02-000 - 12601-20841-000



100310060

400: Burgman 99-06
R.O. 12600-15824-000



YAMAHA

100310110

125: NXC Cygnus X 04-11
R.O. 5TYE55240000 - 5TYE55700100



100310120

125: XC Cygnus R 99-03 • XC K Cygnus R 97-03 • XC T Cygnus 95-98
R.O. 4CVE552400100 - 4CVE55700000



100310070

250: X-City 07-11 • Majesty 96-03 • Majesty Dx 98-99 • Majesty ABS 03 • Black X-Max 09 • X-Max 05-11 • X-Max ABS/Sport 11
300: Versity 03-06
R.O. 4HC155900200 - 1COE55170000



100310090

500: XP T-Max 01-11
530: XP T-Max 12-16
R.O. 5NK155900000 - 5GJ155170000





100254610

GILERA 50: Runner SP 02-12 • Runner 97-00 • Stalker 97-11 • DNA 00-07 • Typhoon 94-97 • Typhoon X 98-99 • Typhoon XR 00
PIAGGIO 50: Fly 4T 02-17 • Fly 2T 05-11 • Liberty 2T 04-08 • Liberty 4T 00-17 • NRG Power DD 05-17 • NRG Power DT 06-15 • Typhoon 01-11 • Typhoon 2T 10-18 • Vespa LX 05-13 • Vespa LXV 06-09 • Vespa Primavera 13-17 • Vespa Sprint 13-17 • Zip 92-04 • Zip 4T 00-13 • Zip SP 96-13
PIAGGIO 125: Vespa ET4 99-02
R.O. 483537



100254620

PIAGGIO 125: Hexagon LX4 98-99 • Zip 4T 00 • Vespa ET4 96-02 • Skipper 4T 00-02 • Liberty 98-02 • Liberty 4T 06-15 • Vespa LX 05-09 • Vespa LXV 06-09
PIAGGIO 150: Vespa LX 05-08 • Skipper 4T 00-02
R.O. 483539



100254630

GILERA 125: Runner FX-FXR 97-98 • Typhoon 95-98 •Typhoon X-XR 99-00
GILERA 180: Runner FX-FXR 97-98
PIAGGIO 125: Hexagon LX 98-99 • Hexagon 94-97 • Skipper 94-97
R.O. 432491



100254640

GILERA 125: Typhoon XR 99-00 • Runner FX-FXR 99-02
GILERA 180: Runner FX-FXR 99-02
PIAGGIO 125: Skipper LX 98
PIAGGIO 180: Hexagon LXT 98-99
R.O. 483538



100254650

MINARELLI - MBK - YAMAHA 50



100254660

PIAGGIO 50: Vespa PK XL 50 85-88 • Vespa PK XL Rush 88-89 • Vespa PK 82-84 • Vespa PK S Automatica 84-89 • Vespa PK XL Plurimatic 85-90 • Vespa N 89-90 • Vespa FL 90 • Vespa FL2 HP 91-97 • Vespa FL2 Automatica 90-91 • Ape TM P 85-89 • Ape FL-FL2 89-95 • Ape FL3 Europa 96-99 • Ape RST Mix 99-03
PIAGGIO 125: Vespa PXE Arcobaleno 91-97 • Vespa PK XL 86-89 • Vespa PK 82-84 • Vespa PK S Automatica 84-89 • Vespa FL 89-90 • Cosa 2 91-97 • Cosa CL-CLX 88-91
PIAGGIO 150: Vespa PXE Arcobaleno 91-97 • Cosa 2 91-97 • Cosa CL-CLX 88-91
PIAGGIO 200: Vespa PXE Arcobaleno 91-97 • Cosa 2 91-97 • Cosa CL-CLX 88-91
R.O. 248293





100254680

Dentatura 14/65 | *Teeth 14/65*

KYMCO 50: Agility 2T R16 10 • Agility 4T Carry 11 • Agility 4T R10 06-08 • Agility 4T R12 07-08 • Agility 4T R16 08-09 • Agility R12 05 • Agility RS Naked 2T 10 • Agility RS 09 • Dink 4T 07 • Filly LX 01-02 • Like 4T 09 • People Euro2 11 • People S 4T 06-08 • Sento 08 • Super 8 4T 09 • Super 8 07 • Vitality 4T 04
R.O. 00107245



100254710

Dentatura 13/47 | *Teeth 13/47*

APRILIA 125: Mojito Retrò - Custom 99-01
PIAGGIO 125: Hexagon LX4 98-99 • Liberty 98-00 • Sfera 95-97 • Vespa ET4 96-98
R.O. 293799



100254720

Dentatura 14/47 | *Teeth 14/47*

APRILIA 100: Scarabeo 4T Net Euro3 10 • Scarabeo 4T Net 10 • Scarabeo 4T Restyling 06-09 • Scarabeo 4T 10-12
DERBI 100: Atlantis 4T 04-06 • Boulevard 4T 10-11
GILERA 125: Runner FX 97-02 • Typhoon X-XR 99-00 • Typhoon 95-98
PIAGGIO 100: Fly 4T 06-14 • Free 02-03 • Zip 4T 06-10
PIAGGIO 125: Hexagon LX-LXT 98-99 • Hexagon 94-97 • Skipper LX 98-99 • Skipper 94-97
R.O. 431321



100254670

Dentatura 14/63 | *Teeth 14/63*

APRILIA 50: Mojito 04-08 • Scarabeo 2T Euro2 Motore Piaggio 10-12 • Scarabeo 2T Net 09-10 • Scarabeo Street 2T Restyling 06-09 • Sport City One 2T 08-11 • SR R Factory ie e Carburatore 10-12 • SR R Factory 04-09
DERBI 50: Atlantis 2T Euro2 07-09 • Atlantis 2T 10 • Atlantis 02 Bullet 03-05 • Atlantis 02 City 03-06 • Atlantis 02 Red Bullet 03 • Atlantis 02 Two Chic 05 • Atlantis 02 02 • Boulevard 2T 09 • GP1 Euro2 05 • GP1 Open Euro2 06-09 • GP1 Race Euro2 05-07 • GP1 01-03 • Sonar 2T 09
GILERA 50: Dna Gp Experience 03-04 • Dna 00-07 • Easy Moving 95-96 • Ice 01-05 • Runner Poggiali 02 • Runner SP Special Edition 07 • Runner SP ST & Simoncelli 08-09 • Runner SP 02-07 • Runner 97-00 • Stalker Naked 08 • Stalker 97-11 • Storm Euro2 07 • Storm 94-95 • Typhoon X 98-99 • Typhoon XR 00 • Typhoon 94-97 • Runner SP 10-11
PIAGGIO 50: Diesis 01 • Fly 2T 05-11 • Free Delivery 01-01 • Free FL 95-02 • Free 92-94 • Liberty 2T RST 04 • Liberty 2T Sport 06-08 • Liberty 2T 06-08 • Liberty PTT Euro2 04-05 • Liberty 97-05 • NRG Extreme 99-00 • NRG MC3 01-04 • NRG Power DD Serie Speciale 07-11 • NRG Power DD 10 • NRG Power DT Serie Speciale 07-08 • NRG Power DT 06 • NRG RST MC2 96-98 • NRG 94-96 • NTT 95-96 • Quartz 92-95 • Sfera Maquillage 2 94 • Sfera RST 95-97 • Sfera 91-93 • Typhoon 2T E2 10-12 • Typhoon 2T E3 CH 11 • Typhoon 01-09 • Vespa ET2 Iniezione 97-00 • Vespa ET2 97-05 • Vespa LX 2T FL 09-10 • Vespa LX 2T 05-08 • Vespa LXV 2T Navy 08 • Vespa LXV 2T 06-08 • Zip 2T 08-11 • Zip Bimodale 94-97 • Zip Fast Raider RST 96-97 • Zip Fast Raider 93-94 • Zip RST 96-99 • Zip SP Euro2 06-12 • Zip SP 96-04 • Zip 92-94 • Liberty Moc 2T & Elle 09-11 • NRG Power DT 07-11 • Vespa LX 2T Touring 10-11 • Vespa S 2T & College 07-11
R.O. 82531R



100254700

Dentatura 14/55 | *Teeth 14/55*

APRILIA 50: RS 06-10 • Scarabeo 4T 4V Net 09-10 • Scarabeo 4T 4V 10 • Scarabeo 4T Restyling Euro3 06-09 • Scarabeo Quattro 09 • Sport City One 4T 08-10 • SR Factory ie e Carburatore 10-12 • SR R - R Factory 04-09
DERBI 50: Atlantis 4T Euro2 07 • Atlantis 4T 04-06 • Boulevard 4T Euro2 25 Km/h 09 • GPR 2T Euro2 09-10 • GPR Nude & GPR Nude Tuning 06-08 • GPR Nude Sport 06 • GPR R Euro2 - GPR Replica Euro2 08 - GPR Racing Euro2 06 • GPR Replica & GPR R Euro2 06 • GPR Replica 2T Malossi 07 • GPR Replica Pesek Euro2 07 • Senda R DRD Pro Euro2 05-11 • Senda SM DRD Pro Euro2 05-11
GILERA 50: Runner Purejet ST 08 • Runner Purejet 02-11
PIAGGIO 50: Fly 4T Motore CHN 06-07 • Fly 4T 05-11 • Liberty 4T Delivery TNT 09 • Liberty 4T Delivery 10-11 • Liberty PTT 09-11 • Liberty RST 04 • Liberty 4T Sport 06-08 • Liberty 4t 00-08 • Liberty MOC 4T & Elle 09-11 • NRG Power Purejet 04-11 • NRG Purejet 02-10 • Vespa ET4 00-05 • Vespa LX 4T-4V Touring 10-11 • Vespa LX 4T-4V 09-11 • Vespa LX 4T 05-08 • Vespa S 4T-4V & College 08-11 • Zip 4T 00-10
R.O. 96922R



100254730

Dentatura 14/40 | *Teeth 14/40*

APRILIA 125: Atlantic Euro3 06-08 • Atlantic Euro3 10-11 • Mojito 03-08 • Sport City Cube 08-10 • Sport City Euro3 06-08 • Sport City One Euro3 08-10 • Sport City 04-06
APRILIA 250: Atlantic Euro3 06-08
DERBI 125: Boulevard Euro3 04-07 • Boulevard 02-04 • GP1 Euro2 06 • GP1 Low Seat Euro3 07-08 • Rambla E3 08 • Rambla 08-09 • Sonar 4T 09 •
DERBI 150: Boulevard 4T E3 10
DERBI 200: Boulevard 05
GILERA 125: DNA 01 • Nexus Euro3 07-08 • Runner VX 4T Euro3 06-07 • Runner VX 4T ST Euro3 08-11 • Runner VX Race 06 • Runner VX SC 06-07 • Runner VX-VXR 00-01 • Runner VX-VXR 02-04 • Runner VX 05-06
GILERA 200: Runner VXR 4T ST Euro3 08-11 • Runner VXR Euro3 07 • Runner VXR Race 06 • Runner VXR 05-06
PIAGGIO 125: Beverly Euro3 MIC 07 • Beverly Euro3 Sport 07-08 • Beverly Euro3 07-08 • Beverly RST 04-07 • Beverly Tourer Euro3 08-10 • Beverly 01-03 • Carnaby 07-10 • Fly Euro3 07-11 • Fly 05-07 • Hexagon GTX 00 • Liberty 4T Euro3 Delivery 08 • Liberty 4T Euro3 07-08 • Liberty 4T Sport Euro3 06-08 • Liberty 4T 06-07 • Liberty MOC 4T & Elle 09-12 • Liberty RST PTT 05-11 • Liberty RST 04-05 • Liberty Sport 06 • Liberty 01-02 • MP3 07-08 • Skipper 4T 00-02 • Super Hexagon GTX12 01-02 • Typhoon 4T 2V E3 10-11 • Vespa ET4 99-02 • Vespa GT Euro3 06-07 • Vespa GT 03-07 • Vespa GTS Euro3 07-11 • Vespa GTV 4T Navy Euro3 08 • Vespa GTV 07-08 • Vespa LX 4T Euro3 Touring 10-11 • Vespa LX 4T FL 09 • Vespa LX Euro3 ie 09-10 • Vespa LX Euro3 06-08 • Vespa LX 05-06 • Vespa LXV 4T Euro3 06-09 • Vespa S 4T ie & College 09-11 • X-Evo 07-11 • X7 Euro3 08 • X8 Premium Euro2-3 06-07 • X8 Street Euro2 06-07 • X8 04-06 • X9 Evolution Euro3 07 • X9 Evolution 03-06 • X9 01-02 • Zip 00-02 • Fly Euro3 08-11
PIAGGIO 150: Fly 05-07 • Liberty 4T Euro3 08 • Liberty 4T Sport Euro3 08 • Liberty MOC 4T 09-10 • Vespa LX Euro3 ie 09-11 • Vespa LX Euro3 06-08 • Vespa LX Touring 10-11 • Vespa LX 05-06 • Vespa S 4T ie & College 09-11 • Vespa S 4T 08-09 • X8 Street Euro2 06-08
PIAGGIO 180: X9 Amalfi 00-03
PIAGGIO 200: Carnaby 07-08 • Liberty 4T Euro3 07-08 • Liberty 4T Sport Euro3 06-07 • Liberty RST 04 • Liberty Sport 06 • Liberty 06 • Vespa GT 06-07 • X8 05-07 • X9 Evolution 03 • X9 02-03
R.O. 82612R





100254740

KYMCO 50: Agility 4T Carry 11• Agility 4T R12 07-08 • Agility 4T R16 08-12 • Agility R12 05 • Agility RS 09 • CX 93-97 • Dink 4T 07 • DJ 93-00 • Fever ZX 99-04 • K12 95-00 • KB 95-00 • Like 4T 09 • Super 8 07 • Super 8 4T 09 • Vitality 4T 04
R.O. 00106109



ACCESSORI PIGNONI MESSA IN MOTO | *PINION STARTERS ACCESSORIES*

121870060

BUSSOLA ALBERO MESSA IN MOTO | *BUSH FOR STARTER SHAFT*

MALAGUTI - MINARELLI -MBK - YAMAHA 50
R.O. 903801524000



121870500

KIT MINUTERIA REVISIONE PIGNONE AVVIAMENTO | *STARTER PINION SERVICING KIT*

PIAGGIO 50: Vespa PK XL 50 85-88 • Vespa PK XL Rush 88-89 • Vespa PK 82-84 • Vespa PK S Automatica 84-89 • Vespa PK XL Plurimatic 85-90 • Vespa N 89-90 • Vespa FL 90 • Vespa FL2 HP 91-97 • Vespa FL2 Automatica 90-91 • Ape TM P 85-89 • Ape FL-FL2 89-95 • Ape FL3 Europa 96-99 • Ape RST Mix 99-03
PIAGGIO 125: Vespa PXE Arcobaleno 91-97 • Vespa PK XL 86-89 • Vespa PK 82-84 • Vespa PK S Automatica 84-89 • Vespa FL 89-90 • Cosa 2 91-97 • Cosa CL-CLX 88-91
PIAGGIO 150: Vespa PXE Arcobaleno 91-97 • Cosa 2 91-97 • Cosa CL-CLX 88-91
PIAGGIO 200: Vespa PXE Arcobaleno 91-97 • Cosa 2 91-97 • Cosa CL-CLX 88-91
R.O. 249482





MOLLE MESSA IN MOTO

STARTER SPRINGS

121930010

MOLLA MESSA IN MOTO | *STARTER SPRING*
Confezione 5 Pz | *5 Pcs Packing*

PIAGGIO - GILERA 50
R.O. 289495



121930020

MOLLA MESSA IN MOTO | *STARTER SPRING*
Confezione 5 Pz | *5 Pcs Packing*

MINARELLI - MBK - YAMAHA 50
R.O. 905083260900



121930030

MOLLA PIGNONE MESSA IN MOTO | *STARTER PINION SPRING*
Confezione 10 Pz | *10 Pcs Packing*

MINARELLI - MBK - YAMAHA 50
R.O. 3VLE56730000



121930050

MOLLA MESSA IN MOTO | *STARTER SPRING*
Confezione 5 Pz | *5 Pcs Packing*

PIAGGIO 125: Cosa 2 91-97 • Cosa CL-CLX 88-91 • Vespa PX 30 anni 07-08 • Vespa PX Euro 2 01-07 • Vespa PX T5 85-89 • Vespa PX 98-17 • Vespa PXE Arcobaleno 81-97 • Vespa Sprint - GR - Super - Rally 65-76 • Vespa 55-65
PIAGGIO 150: Vespa GS - Super Sport 55-65 • Vespa PX 11-17
R.O. 047218



121930060

MOLLA MESSA IN MOTO | *STARTER SPRING*
Confezione 5 Pz | *5 Pcs Packing*

PIAGGIO 50: Ape P 80-85 • Ape TM P 85-89 • Ape FL3 Europa 96-99 • Vespa FL2 HP 91-97 • Vespa N 89-90 • Vespa PK 82-84 • Vespa PK XL 85-88 • Vespa PK XL Rush 88-89 • Vespa 67-82
PIAGGIO 125: Vespa PK XL 86-89 • Vespa Primavera 67-83 • Vespa ET3 67-83
V5A1-V5B1-V5B2-V5SA1-V9A1-VMA2-VMB1-VMX1T
R.O. 078478



121930070

MOLLA INGRANAGGIO MESSA IN MOTO | *STARTER GEAR SPRING*
Confezione 20 Pz | *20 Pcs Packing*

PIAGGIO 125: Cosa 2 91-97 • Cosa CL-CLX 88-91 • Vespa PX 30 anni 07-08 • Vespa PX Euro2 01-07 • Vespa PX T5 85-89 • Vespa PX 98-17 • Vespa PXE Arcobaleno 81-97
PIAGGIO 150: Vespa PX 11-17
R.O. 139100



121890070

MOLLA MASSETTE FRIZIONE | *CLUTCH SPRING*
Confezione 50 Pz | *50 Pcs Packing*

PIAGGIO 50: Ciao • Si • Grillo • Bravo Erre 2
R.O. 121753





Modello *Model*	CC	Da *From*	A *To*	OEM	Codice RMS *RMS Code*
APRILIA					
Scarabeo 4T	50	2002	2006	AP8551071	**163712020**
Scarabeo 4T 4V	50	2010	2012	96933R	**163712020**
Scarabeo 4T 4V	50	2014	2014	96933R	**163712020**
Scarabeo 4T 4V Net	50	2009	2010	96933R	**163712020**
Scarabeo 4T Restyling Eu3	50	2006	2009	96933R	**163712020**
Scarabeo Quattro	50	2009	2009	96933R	**163712020**
Sport City One 4T	50	2008	2010	96933R	**163712020**
Sr Motard 4T 4V	50	2013	2014	96933R	**163712020**
Scarabeo 4T	100	2001	2005	AP8551071	**163712020**
Scarabeo 4T	100	2010	2012	96933R	**163712020**
Scarabeo 4T	100	2014	2014	96933R	**163712020**
Scarabeo 4T Net	100	2009	2009	96933R	**163712020**
Scarabeo 4T Net Eu3	100	2010	2010	96933R	**163712020**
Scarabeo 4T Restyling	100	2006	2009	96933R	**163712020**
Atlantic	125	2003	2005	AP8580130	**163712070**
Atlantic Eu3	125	2010	2012	82644R	**163712070**
Atlantic Eu3 125-250	125	2006	2008	AP8580130	**163712070**
Leonardo	125	1996	2002	AP0297930	**163712140**
Leonardo St	125	2001	2004	AP0297930	**163712140**
Mojito	125	2003	2007	AP8540048	**163712030**
Mojito	125	2008	2008	82643R	**163712030**
Scarabeo	125	2003	2006	AP8580130	**163712070**
Scarabeo Motore Piaggio Eu3	125	2006	2006	AP8580130	**163712070**
Scarabeo Motore Rotax	125	1999	2004	AP0297932	**163712140**
Sport City	125	2004	2006	AP8580130	**163712070**
Sport City Cube	125	2008	2010	82644R	**163712070**
Sport City Eu3	125	2006	2008	AP8580130	**163712070**
Sport City One 4T Eu3	125	2008	2011	82643R	**163712030**
Sport City Street	125	2012	2012	82644R	**163712070**
Sr Max	125	2011	2014	82644R	**163712070**
Sr Motard	125	2012	2014	82643R	**163712030**
Atlantic Eu3 125-250	250	2006	2008	AP8577032	**163712200**
Leonardo	250	1999	2001	AP8122434	**163712180**
Leonardo	250	2002	2004	AP8552083	**163712180**
Leonardo St	250	2001	2001	AP8122434	**163712180**
Scarabeo	250	2004	2006	AP8577032	**163712200**
Scarabeo Light	250	2006	2008	AP8577032	**163712200**
Sport City Cube	250	2008	2012	82723R	**163712200**
Sport City Eu3	250	2006	2008	AP8577032	**163712200**
Atlantic	300	2010	2011	82723R	**163712200**
Scarabeo Light	300	2009	2010	82723R	**163712200**
Sport City Street	300	2012	2012	82723R	**163712200**
Sr Max	300	2011	2014	82723R	**163712200**
Atlantic Sprint 400-500	400	2005	2008	AP8560060	**163712100**
Scarabeo Light 400-500	400	2006	2008	827889	**163712100**
Atlantic	500	2001	2004	AP8560060	**163712100**
Scarabeo	500	2003	2006	AP8560060	**163712100**
DERBI					
Atlantis 4T Eu2	50	2007	2007	96933R	**163712020**
Atlantis 50-100 4T	50	2004	2006	96933R	**163712020**
Boulevard 4T Eu2 25 Km/H	50	2009	2009	96933R	**163712020**
Dirt Boy & Dirt Kid	50	2004	2007	96933R	**163712020**
Boulevard 4T	100	2010	2011	96933R	**163712020**
Boulevard 125-150	125	2003	2004	82643R	**163712030**
Boulevard 125-150 Eu2	125	2004	2007	82643R	**163712030**
Boulevard 4T Eu3	125	2008	2012	82643R	**163712030**
Gp1 Eu2	125	2006	2006	82644R	**163712070**
Gp1 Low Seat 125 Eu3	125	2007	2008	82644R	**163712070**
Rambla 125-250	125	2008	2009	82644R	**163712070**
Rambla 125-250 E3 2Ver	125	2008	2008	82644R	**163712070**
Sonar 4T	125	2009	2011	82643R	**163712030**
Variant Sport 4T E3	125	2012	2012	82643R	**163712030**
Boulevard 4T E3	150	2010	2010	82643R	**163712030**
Sonar 4T	150	2009	2009	82643R	**163712030**
Boulevard Eu2	200	2005	2006	82643R	**163712030**
Gp1	250	2006	2007	82723R	**163712200**
Gp1 Low Seat 250 Eu3	250	2007	2008	82723R	**163712200**
Rambla 125-250	250	2008	2009	82723R	**163712200**
Rambla 125-250 E3 2Ver	250	2008	2008	82723R	**163712200**
Rambla	300	2010	2011	82723R	**163712200**
GILERA					
Dna 125-180	125	2001	2001	82644R	**163712070**
Nexus Eu3	125	2007	2008	82644R	**163712070**
Nexus Eu3 Ie	125	2008	2010	82644R	**163712070**
Runner 4T St Eu3	125	2008	2013	82644R	**163712070**
Runner Vx	125	2005	2006	82644R	**163712070**
Runner Vx 4T Eu3	125	2006	2007	82644R	**163712070**
Runner Vx Race	125	2006	2006	82644R	**163712070**
Runner Vx Sc	125	2006	2007	82644R	**163712070**
Runner Vx-Vxr 125-180	125	2000	2001	82644R	**163712070**
Runner Vx-Vxr 125-200	125	2002	2004	82644R	**163712070**
Runner Vxr	200	2005	2006	82644R	**163712070**
Runner Vxr 4T St Eu3	200	2008	2011	82644R	**163712070**
Runner Vxr Eu3	200	2007	2007	82644R	**163712070**
Runner Vxr Race	200	2005	2006	82644R	**163712070**
Nexus Eu3	250	2006	2007	82723R	**163712200**
Nexus Sp Eu3	250	2006	2007	82723R	**163712200**
Oregon	250	2006	2010	82723R	**163712200**
Nexus Eu3	300	2008	2011	82723R	**163712200**
Fuoco 4T-4V Ie E3 Lt	500	2013	2014	827889	**163712100**
Fuoco Eu3	500	2007	2013	827889	**163712100**
Nexus	500	2003	2005	827889	**163712100**
Nexus Eu3	500	2006	2011	827889	**163712100**
Nexus Sp Eu3	500	2006	2007	827889	**163712100**
HONDA					
Dio Vision 110	110	2011	2011	14401-GFM-971	**163712040**
Lead 110	110	2008	2012	14401-GFM-971	**163712040**
Vision 110	110	2013	2016	14401-GFM-971	**163712040**
Arobase 125	125	2005	2006	14401-KRJ-901	**163712030**
Forza 125	125	2015	2015	14401-KSS-931	**163712050**
Forza 125 Abs	125	2015	2016	14401-KSS-931	**163712050**
Innova 125	125	2010	2012	14401-KSS-931	**163712050**
Pantheon 125 Fes	125	2003	2005	14401-KRJ-901	**163712030**
Pcx 125	125	2010	2015	14401-KSS-931	**163712050**
Pcx 125 Limited Edition	125	2012	2012	14401-KSS-931	**163712050**
Pes 125 Injection	125	2006	2009	14401-KRJ-901	**163712030**
Pes 125 Injection Sporty	125	2006	2009	14401-KRJ-901	**163712030**
Ps 125 Injection	125	2010	2012	14401-KRJ-901	**163712030**
Ps 125 Injection 2Ed	125	2010	2010	14401-KRJ-901	**163712030**
Ps 125 Injection Sporty	125	2010	2010	14401-KRJ-901	**163712030**
Ps 125 Injection Sporty 2Ed	125	2010	2010	14401-KRJ-901	**163712030**
S Wing 125	125	2012	2012	14401-KRJ-901	**163712030**
S Wing 125 Abs	125	2012	2012	14401-KRJ-901	**163712030**
S Wing 125 Fes	125	2007	2009	14401-KRJ-901	**163712030**
S Wing 125 Fes 2Ed	125	2011	2011	14401-KRJ-901	**163712030**
S Wing 125 Fes Abs	125	2007	2011	14401-KRJ-901	**163712030**

Modello *Model*	CC	Da *From*	A *To*	OEM	Codice RMS *RMS Code*
S Wing 125 Fes Abs 2Ed	125	2011	2011	14401-KRJ-901	**163712030**
S Wing 125 Fes Abs Top Box	125	2007	2007	14401-KRJ-901	**163712030**
Sh 125	125	2007	2011	14401-KRJ-901	**163712030**
Sh 125	125	2013	2016	14401-KSS-931	**163712050**
Sh 125 2Ed	125	2007	2007	14401-KRJ-901	**163712030**
Sh 125 Abs	125	2013	2016	14401-KSS-931	**163712050**
Sh 125 Abs Sporty	125	2014	2014	14401-KSS-931	**163712050**
Sh 125 Abs Sporty Top Case	125	2014	2014	14401-KSS-931	**163712050**
Sh 125 Abs Top Case	125	2014	2014	14401-KSS-931	**163712050**
Sh 125 D	125	2016	2016	14401-KSS-931	**163712050**
Sh 125 D Abs	125	2016	2016	14401-KSS-931	**163712050**
Sh 125 D Rear Drum	125	2009	2009	14401-KRJ-901	**163712030**
Sh 125 Ds	125	2016	2016	14401-KSS-931	**163712050**
Sh 125 Ds Abs	125	2016	2016	14401-KSS-931	**163712050**
Sh 125 Injection	125	2005	2005	14401-KRJ-901	**163712030**
Sh 125 Injection Top Box	125	2005	2006	14401-KRJ-901	**163712030**
Sh 125 R 2Ed Rear Drum	125	2008	2008	14401-KRJ-901	**163712030**
Sh 125 R Rear Drum	125	2008	2008	14401-KRJ-901	**163712030**
Sh 125 R Rear Drum, Tob Box	125	2010	2010	14401-KRJ-901	**163712030**
Sh 125 R White	125	2012	2012	14401-KRJ-901	**163712030**
Sh 125 Rear Disk	125	2009	2009	14401-KRJ-901	**163712030**
Sh 125 Rear Disk, Top Box	125	2010	2010	14401-KRJ-901	**163712030**
Sh 125 S	125	2016	2016	14401-KSS-931	**163712050**
Sh 125 S Abs	125	2016	2016	14401-KSS-931	**163712050**
Sh 125 S Top Case	125	2007	2008	14401-KRJ-901	**163712030**
Sh 125 S Top Case 2Ed	125	2007	2007	14401-KRJ-901	**163712030**
Sh 125 Sporty	125	2014	2014	14401-KSS-931	**163712050**
Sh 125 Top Box	125	2012	2012	14401-KRJ-901	**163712030**
Sh Mode 125	125	2014	2016	14401-KSS-931	**163712050**
Arobase 150	150	2005	2006	14401-KRJ-901	**163712030**
Pantheon 150 Fes	150	2003	2005	14401-KRJ-901	**163712030**
Pcx 150	150	2012	2016	14401-KSS-931	**163712050**
Pes 150 Injection	150	2006	2009	14401-KRJ-901	**163712030**
Pes 150 R Two Tones	150	2008	2009	14401-KRJ-901	**163712030**
Ps 150 Injection	150	2010	2010	14401-KRJ-901	**163712030**
S Wing 150 Fes	150	2009	2009	14401-KRJ-901	**163712030**
S Wing 150 Fes Abs	150	2007	2009	14401-KRJ-901	**163712030**
Sh 150	150	2005	2012	14401-KRJ-901	**163712030**
Sh 150	150	2013	2016	14401-KSS-931	**163712050**
Sh 150 2Ed	150	2006	2010	14401-KRJ-901	**163712030**
Sh 150 Abs	150	2014	2016	14401-KSS-931	**163712050**
Sh 150 Abs Sporty	150	2014	2014	14401-KSS-931	**163712050**
Sh 150 D	150	2013	2016	14401-KSS-931	**163712050**
Sh 150 D Abs	150	2016	2016	14401-KSS-931	**163712050**
Sh 150 Ds	150	2016	2016	14401-KSS-931	**163712050**
Sh 150 Ds Abs	150	2016	2016	14401-KSS-931	**163712050**
Sh 150 R	150	2008	2012	14401-KRJ-901	**163712030**
Sh 150 R Top Box	150	2010	2010	14401-KRJ-901	**163712030**
Sh 150 Rear Disk	150	2009	2009	14401-KRJ-901	**163712030**
Sh 150 S	150	2008	2011	14401-KRJ-901	**163712030**
Sh 150 S	150	2016	2016	14401-KSS-931	**163712050**
Sh 150 S Abs	150	2016	2016	14401-KSS-931	**163712050**
Sh 150 Sporty	150	2014	2014	14401-KSS-931	**163712050**
Sh 150 Top Box 2Ed	150	2005	2005	14401-KRJ-901	**163712030**
Crf 230	230	2004	2008	14401-KFB-751	**163712190**
Crf 230 F	230	2009	2009	14401-KFB-751	**163712190**
Forza 250 Abs	250	2008	2008	14401-KFB-751	**163712190**
Reflex 250 Sport	250	2008	2008	14401-KFB-751	**163712190**
Forza 300	300	2013	2016	14401-KFB-751	**163712190**
Forza 300 Abs	300	2013	2016	14401-KFB-751	**163712190**
Sh 300	300	2007	2014	14401-KFB-751	**163712190**
Sh 300 3E	300	2009	2009	14401-KFB-751	**163712190**
Sh 300 Abs	300	2007	2014	14401-KFB-751	**163712190**
Sh 300 Abs 3Ed	300	2009	2009	14401-KFB-751	**163712190**
Sh 300 Abs Black	300	2013	2013	14401-KFB-751	**163712190**
Sh 300 Abs Black Special	300	2014	2014	14401-KFB-751	**163712190**
Sh 300 Abs Sport	300	2009	2009	14401-KFB-751	**163712190**
Sh 300 Abs Sport 3Ed	300	2009	2009	14401-KFB-751	**163712190**
Sh 300 Abs Sporty	300	2014	2014	14401-KFB-751	**163712190**
Sh 300 Abs Top Box	300	2010	2011	14401-KFB-751	**163712190**
Sh 300 Black Special	300	2014	2014	14401-KFB-751	**163712190**
Sh 300 I Abs	300	2015	2015	14401-KFB-751	**163712190**
Sh 300 R	300	2012	2013	14401-KFB-751	**163712190**
Sh 300 R Abs	300	2012	2013	14401-KFB-751	**163712190**
Sh 300 R Abs White	300	2013	2013	14401-KFB-751	**163712190**
Sh 300 Spc	300	2008	2010	14401-KFB-751	**163712190**
Sh 300 Spc 2F	300	2008	2010	14401-KFB-751	**163712190**
Sh 300 Spc 3Ed	300	2009	2009	14401-KFB-751	**163712190**
Sh 300 Sporty	300	2014	2014	14401-KFB-751	**163712190**
Sh 300 Sporty Abs	300	2008	2010	14401-KFB-751	**163712190**
Sh 300 Sporty Abs Top Box	300	2010	2010	14401-KFB-751	**163712190**
Sh 300 Top Box	300	2010	2010	14401-KFB-751	**163712190**
Silver Wing 400	400	2006	2009	14401-MCT-003	**163712170**
Silver Wing 400 Abs	400	2009	2009	14401-MCT-003	**163712170**
Silver Wing 600	600	2001	2011	14401-MCT-003	**163712170**
Silver Wing 600 Abs	600	2003	2011	14401-MCT-003	**163712170**
Ctx 1300 Abs	1300	2014	2014	14401-MCT-003	**163712170**
Pan European 1300 Abs	1300	2002	2014	14401-MCT-003	**163712170**
Pan European St 1300	1300	2002	2009	14401-MCT-003	**163712170**
KYMCO					
Agility 4T Carry	50	2011	2011	00103612	**163712010**
Agility 4T R10	50	2006	2008	00103612	**163712010**
Agility 4T R12	50	2007	2008	00103612	**163712010**
Agility 4T R16	50	2008	2009	00103612	**163712010**
Agility 4T R16	50	2012	2012	00103612	**163712010**
Agility Plus 4T	50	2014	2014	00103612	**163712010**
Agility R12	50	2005	2005	00103612	**163712010**
Agility R12 Ecs	50	2016	2016	00103612	**163712010**
Agility Rs	50	2009	2009	00103612	**163712010**
Dink 50 4T	50	2007	2007	00103612	**163712010**
Filly	50	1998	2000	00103612	**163712010**
Filly Lx	50	2001	2002	00103612	**163712010**
Like 4T	50	2009	2009	00103612	**163712010**
People S 4T	50	2006	2008	00103612	**163712010**
Sento	50	2008	2008	00103612	**163712010**
Super 8	50	2007	2007	00103612	**163712010**
Super 8 4T	50	2009	2009	00103612	**163712010**
Super 8 4T	50	2013	2013	00103612	**163712010**
Vitality 4T	50	2004	2004	00103612	**163712010**
Agility 4T	125	2006	2006	00123110	**163712030**
Agility 4T Eu3	125	2006	2008	00123110	**163712030**
Agility Carry	125	2011	2011	00123110	**163712030**
Agility Plus	125	2014	2014	00123110	**163712030**
Agility Plus E4	125	2016	2016	00123110	**163712030**
Agility R16	125	2008	2009	00123110	**163712030**
Agility R16	125	2012	2012	00123110	**163712030**



Modello *Model*	CC	Da *From*	A *To*	OEM	Codice RMS *RMS Code*
Agility Rs	125	2009	2009	00123110	**163712030**
B&W 125-150	125	2000	2000	00123912	**163712130**
B&W 125-150 Eu2	125	2003	2004	00123912	**163712130**
Dink 125 Eu3	125	2006	2007	00123110	**163712030**
Dink 125-150	125	1997	1998	00123912	**163712130**
Dink Classic 125-150	125	2002	2002	00123912	**163712130**
Dink Classic 125-150 Eu2	125	2003	2003	00123912	**163712130**
Dink Lx 125-150	125	1998	2000	00123912	**163712130**
G-Dink	125	2012	2012	00123110	**163712030**
Grand Dink 125-150	125	2001	2002	00123110	**163712030**
Grand Dink 125-150 Eu2	125	2003	2004	00123110	**163712030**
Like	125	2009	2009	00123110	**163712030**
Like Lx	125	2012	2012	00123110	**163712030**
Movie	125	1999	2000	00123110	**163712030**
Movie 125 Eu3	125	2006	2007	00123110	**163712030**
Movie Xl 125-150	125	2001	2001	00123110	**163712030**
Movie Xl 125-150 Eu2	125	2003	2004	00123110	**163712030**
People 125-150	125	1999	2000	00123110	**163712030**
People 125-150 Eu2	125	2003	2003	00123110	**163712030**
People Eu3	125	2007	2008	00123110	**163712030**
People Eu3	125	2011	2011	00123110	**163712030**
People One E4	125	2016	2016	00123110	**163712030**
People One I	125	2013	2013	00123110	**163712030**
People One I Dd	125	2015	2015	00123110	**163712030**
People S	125	2005	2005	00123110	**163712030**
People S Dd Eu3	125	2007	2008	00123110	**163712030**
Super 8	125	2008	2009	00123110	**163712030**
Vivio 125-150	125	2000	2000	00123110	**163712030**
Agility R16	150	2008	2009	00123110	**163712030**
Movie 150 Eu3	150	2006	2007	00123110	**163712030**
Agility 200I R16	200	2010	2010	00123110	**163712030**
Agility I Plus	200	2014	2014	00123110	**163712030**
Agility R16	200	2012	2012	00123110	**163712030**
Dink Classic	200	2004	2004	00123912	**163712130**
Dink Eu3i	200	2006	2007	00123110	**163712030**
Downtown I	200	2010	2010	00114051	**163712270**
Like 200I	200	2009	2009	00123110	**163712030**
Like Lx	200	2012	2012	00123110	**163712030**
People Gti	200	2010	2010	00114051	**163712270**
People Gti	200	2014	2014	00114051	**163712270**
People S	200	2005	2005	00123110	**163712030**
People S 200I	200	2007	2007	00123110	**163712030**
B&W	250	2000	2000	00123910	**163712080**
B&W Eu2	250	2003	2003	00123910	**163712080**
Grand Dink	250	2001	2002	00123910	**163712080**
Grand Dink Eu2	250	2003	2004	00123910	**163712080**
Kxr	250	2003	2004	00123910	**163712080**
Mxu	250	2005	2005	00123910	**163712080**
People Lc	250	2003	2004	00123910	**163712080**
People S	250	2006	2006	00123910	**163712080**
People S	250	2006	2006	00123092	**163712080**
People S 250I	250	2007	2007	00123910	**163712080**
X Citing	250	2005	2005	00123910	**163712080**
X Citing	250	2005	2005	00123092	**163712080**
X Citing I	250	2006	2007	00123910	**163712080**
Yup	250	2003	2003	00123910	**163712080**
Downtown 300I	300	2009	2009	00114051	**163712270**
Downtown Abs	300	2010	2010	00114051	**163712270**
Downtown Abs I	300	2011	2016	00114051	**163712270**
Downtown I	300	2011	2011	00114051	**163712270**
K-Xct I	300	2012	2012	00114051	**163712270**
K-Xct I Abs	300	2014	2014	00114051	**163712270**
People Gti	300	2010	2011	00114051	**163712270**
People Gti	300	2014	2014	00114051	**163712270**
People Gti Abs	300	2012	2012	00114051	**163712270**
People Gti Abs	300	2014	2014	00114051	**163712270**
People Gti Abs E4	300	2016	2016	00114051	**163712270**
Downtown Abs E4	350	2016	2016	00114051	**163712270**
Downtown I Abs	350	2015	2015	00114051	**163712270**
Mxu	400	2008	2008	00114051	**163712270**
X Citing I	400	2013	2013	00114051	**163712270**
X Citing I	400	2015	2015	00114051	**163712270**
X Citing I Abs	400	2014	2015	00114051	**163712270**
X Citing I Abs E4	400	2016	2016	00114051	**163712270**
Maxxer I	450	2010	2010	00114051	**163712270**
Mxu	500	2005	2006	00123058	**163712290**
Mxu Irs	500	2010	2010	00123058	**163712290**
Uxv	500	2008	2008	00123058	**163712290**
Uxv I	500	2010	2010	00123058	**163712290**
X Citing	500	2005	2005	00123058	**163712290**
X Citing 500 R	500	2009	2009	00123058	**163712290**
X Citing 500I	500	2006	2008	00123058	**163712290**
X Citing 500I R	500	2007	2008	00123058	**163712290**
LML					
STAR 4T	125	-	-	SF5130132	**163712320**
STAR 4T	150	-	-	SF5130132	**163712320**
MALAGUTI					
Ciak	125	2000	2001	51700400	**163712070**
Ciak Master	125	2004	2004	51700400	**163712070**
Ciak Master Eu3	125	2006	2006	51700400	**163712070**
Ciak Restyling Eu2	125	2003	2003	51700400	**163712070**
Madison	125	1999	2001	71700800	**163712130**
Madison R Restyling	125	2002	2002	71700800	**163712130**
Madison R Restyling Eu2	125	2003	2004	71700800	**163712130**
Phantom Max	125	2003	2003	71700800	**163712130**
Ciak	150	2000	2002	51700400	**163712070**
Ciak Master	150	2004	2004	51700400	**163712070**
Ciak Restyling Eu2	150	2003	2003	51700400	**163712070**
Madison T	150	1999	2001	71700800	**163712130**
Ciak Master Euro 2	200	2006	2006	51700400	**163712070**
Madison S	250	1999	2001	91700100	**163712180**
Password	250	2005	2006	71701200	**163712180**
Password Eu3	250	2007	2008	71701200	**163712180**
Spidermax Gt	500	2004	2005	41701000	**163712100**
Spidermax Gt Eu3	500	2006	2006	41701000	**163712100**
Spidermax Rs	500	2008	2008	41701000	**163712100**
MBK					
Xn Doodo	125	2000	2001	945914809400	**163712130**
Xq Thunder	125	2001	2002	945914809400	**163712130**
Yp E Skyliner	125	2003	2003	945914809400	**163712130**
Yp Skyliner	125	1998	2002	945914809400	**163712130**
Xn Doodo	150	2001	2002	945914809400	**163712130**
Xq Thunder	150	2001	2002	945914809400	**163712130**
Yp Skyliner	150	2000	2002	945914809400	**163712130**
Yp E Skyliner	180	2003	2003	945914809400	**163712130**
Yp Skyliner	250	2000	2003	945821710400	**163712180**

Modello *Model*	CC	Da *From*	A *To*	OEM	Codice RMS *RMS Code*
Yp Skyliner Abs	250	2003	2003	945821710400	**163712180**
Xc Kilibre	300	2003	2003	945821710400	**163712180**
PEUGEOT					
Fight 3 4T Dse	50	-	-	801526	**163712210**
Fight 3 A 4T Dse	50	-	-	801526	**163712210**
Fight 3 Ar 4T	50	-	-	801526	**163712210**
Fight 3 R 4T	50	-	-	801526	**163712210**
Tweet	50	-	-	801526	**163712210**
Tweet A Pmx	50	-	-	801526	**163712210**
Tweet N	50	-	-	801526	**163712210**
Tweet Pmx	50	-	-	801526	**163712210**
Tweet V	50	-	-	801526	**163712210**
Tweet X	50	-	-	801526	**163712210**
Viva 3L 4T	50	-	-	801526	**163712210**
Citystar	125	-	-	766961	**163712070**
Geopolis	125	-	-	766961	**163712070**
Looxor	125	-	-	756294	**163712030**
Satelis	125	-	-	766961	**163712070**
Tweet	125	-	-	802130	**163712050**
Looxor	150	-	-	756294	**163712030**
Tweet	150	-	-	802130	**163712050**
Citystar	200	-	-	766961	**163712070**
Geopolis	250	-	-	758715	**163712200**
Setelis	250	-	-	758715	**163712200**
Geopolis	300	-	-	758715	**163712200**
Setelis	300	-	-	758715	**163712200**
Geopolis	400	-	-	759717	**163712100**
Satelis	400	-	-	759717	**163712100**
Geopolis	500	-	-	759717	**163712100**
PIAGGIO					
Fly 4T	50	2005	2007	96933R	**163712020**
Fly 4T & 25-30 Km/H	50	2008	2011	96933R	**163712020**
Fly 4T 2V	50	2013	2015	96933R	**163712020**
Fly 4T 2V 25-30Km-H	50	2012	2014	96933R	**163712020**
Fly 4T 4V	50	2012	2013	96933R	**163712020**
Fly 4T Motore Chn	50	2006	2007	96933R	**163712020**
Liberty 4T	50	2000	2002	96933R	**163712020**
Liberty 4T	50	2005	2008	96933R	**163712020**
Liberty 4T Delivery - Single	50	2010	2014	96933R	**163712020**
Liberty 4T Delivery Tnt	50	2009	2009	96933R	**163712020**
Liberty 4T Ptt - Double - Nexive	50	2009	2015	96933R	**163712020**
Liberty 4T Ptt (Deu)	50	2007	2012	96933R	**163712020**
Liberty 4T Rst	50	2004	2004	96933R	**163712020**
Liberty 4T Sport	50	2006	2008	96933R	**163712020**
Liberty Iget 4T 3V 25Km/H	50	2016	2016	96933R	**163712020**
Liberty Iget 4T 3V Ie	50	2015	2016	96933R	**163712020**
Liberty Moc 4T & Elle	50	2009	2016	96933R	**163712020**
Vespa Et4	50	2000	2005	96933R	**163712020**
Vespa Lx 4T	50	2005	2009	96933R	**163712020**
Vespa Lx 4T-4V	50	2009	2013	96933R	**163712020**
Vespa Lx 4T-4V Touring	50	2010	2013	96933R	**163712020**
Vespa Primavera 4T 2V 25 Km/H	50	2014	2016	96933R	**163712020**
Vespa Primavera 4T-4V	50	2013	2016	96933R	**163712020**
Vespa S 4T-4V & College	50	2008	2012	96933R	**163712020**
Vespa Sprint 4T 2V 25 Km/H	50	2014	2016	96933R	**163712020**
Vespa Sprint 4T 4V	50	2014	2016	96933R	**163712020**
Zip 4T	50	2000	2013	96933R	**163712020**
Zip 4T 25Km-H	50	2006	2016	96933R	**163712020**

Modello *Model*	CC	Da *From*	A *To*	OEM	Codice RMS *RMS Code*
Fly 4T	100	2006	2014	96933R	**163712020**
Free	100	2002	2003	96933R	**163712020**
Zip 4T	100	2006	2010	96933R	**163712020**
Beverly	125	2001	2003	82644R	**163712070**
Beverly Eu3	125	2007	2008	82644R	**163712070**
Beverly Eu3 Mic	125	2007	2007	82644R	**163712070**
Beverly Eu3 Sport	125	2007	2008	82644R	**163712070**
Beverly Rst	125	2004	2005	82644R	**163712070**
Beverly Rst	125	2005	2007	82644R	**163712070**
Beverly Rst 4T 4V Ie Eu3	125	2010	2015	82644R	**163712070**
Beverly Tourer Eu3	125	2007	2010	82644R	**163712070**
Carnaby	125	2007	2010	82644R	**163712070**
Fly	125	2005	2007	82643R	**163712030**
Fly Eu3	125	2007	2011	82643R	**163712030**
Hexagon Gtx	125	2000	2000	82644R	**163712070**
Hexagon Lx4	125	1998	1999	436246	**163712240**
Liberty	125	1998	2000	436246	**163712240**
Liberty	125	2001	2002	82643R	**163712030**
Liberty 4T	125	2006	2007	82643R	**163712030**
Liberty 4T 2V Eu3	125	2009	2012	82643R	**163712030**
Liberty 4T 2V Ie Ptt - Ita	125	2012	2013	82643R	**163712030**
Liberty 4T Eu3	125	2006	2008	82643R	**163712030**
Liberty 4T Eu3 Delivery - Single	125	2007	2015	82643R	**163712030**
Liberty 4T Eu3 Delivery-Tnt-Nexive	125	2008	2015	82643R	**163712030**
Liberty 4T Sport Eu3	125	2006	2008	82643R	**163712030**
Liberty Rst	125	2004	2005	82643R	**163712030**
Liberty Rst Ptt	125	2005	2011	82643R	**163712030**
Liberty Sport	125	2006	2006	82643R	**163712030**
Mp3	125	2006	2008	82644R	**163712070**
Mp3 Ibrido	125	2009	2010	82644R	**163712070**
Mp3 Ie	125	2008	2009	82644R	**163712070**
Mp3 Ie Touring	125	2011	2012	82644R	**163712070**
Mp3 Yourban Erl	125	2011	2013	82644R	**163712070**
Sfera	125	1995	1997	436246	**163712240**
Skipper 4T	125	2000	2002	82643R	**163712030**
Super Hexagon Gtx 12	125	2001	2002	82644R	**163712070**
Typhoon 4T 2V Eu3	125	2010	2011	82643R	**163712030**
Vespa Et4	125	1996	1998	436246	**163712240**
Vespa Et4	125	1999	2002	82643R	**163712030**
Vespa Granturismo	125	2003	2007	82644R	**163712070**
Vespa Granturismo Eu3	125	2006	2007	82644R	**163712070**
Vespa Gts 4T Ie Super	125	2009	2016	82644R	**163712070**
Vespa Gts Eu3	125	2007	2012	82644R	**163712070**
Vespa Gtv	125	2006	2008	82644R	**163712070**
Vespa Gtv 4T Navy Eu3	125	2008	2008	82644R	**163712070**
Vespa Lx	125	2005	2006	82643R	**163712030**
Vespa Lx 4T Eu3 Touring	125	2010	2011	82643R	**163712030**
Vespa Lx 4T Fl	125	2009	2009	82643R	**163712030**
Vespa Lx Eu3	125	2006	2008	82643R	**163712030**
Vespa Lx Eu3 Ie	125	2009	2011	82643R	**163712030**
Vespa Lxv 4T Eu3	125	2006	2009	82643R	**163712030**
Vespa Lxv 4T Navy Eu3	125	2007	2008	82643R	**163712030**
Vespa Lxv Ie 4T	125	2010	2013	82643R	**163712030**
Vespa S 4T Eu3	125	2007	2008	82643R	**163712030**
Vespa S 4T Ie & College	125	2009	2011	82643R	**163712030**
X Evo	125	2007	2016	82644R	**163712070**
X10 4T 4V Ie Eu3	125	2012	2013	82644R	**163712070**
X7 Eu3	125	2008	2008	82644R	**163712070**



Modello *Model*	CC	Da *From*	A *To*	OEM	Codice RMS *RMS Code*
X7 Evo Ie Eu3	125	2009	2010	82644R	**163712070**
X8	125	2004	2006	82644R	**163712070**
X8 Premium Eu3	125	2006	2007	82644R	**163712070**
X8 Premium Euro 2	125	2006	2006	82644R	**163712070**
X8 Street Euro 2	125	2006	2007	82643R	**163712030**
X9	125	2001	2002	82644R	**163712070**
X9 Evolution	125	2003	2003	82644R	**163712070**
X9 Evolution	125	2005	2006	82644R	**163712070**
X9 Evolution Eu3	125	2007	2007	82644R	**163712070**
Zip	125	2000	2002	82643R	**163712030**
Fly	150	2005	2007	82643R	**163712030**
Fly Eu3	150	2008	2011	82643R	**163712030**
Liberty 4T Eu3	150	2008	2008	82643R	**163712030**
Liberty 4T Sport Eu3	150	2008	2008	82643R	**163712030**
Liberty Moc 4T Eu3	150	2009	2013	82643R	**163712030**
Vespa Lx	150	2005	2006	82643R	**163712030**
Vespa Lx 4T Fl	150	2009	2009	82643R	**163712030**
Vespa Lx Eu3	150	2006	2008	82643R	**163712030**
Vespa Lx Eu3 Ie	150	2009	2011	82643R	**163712030**
Vespa Lx Touring	150	2010	2012	82643R	**163712030**
Vespa S 4T	150	2008	2009	82643R	**163712030**
Vespa S 4T Ie & College	150	2009	2012	82643R	**163712030**
X8 Street Euro 2	150	2006	2008	82643R	**163712030**
X9 Amalfi	180	2000	2003	82644R	**163712070**
Carnaby	200	2007	2008	82644R	**163712070**
Liberty	200	2006	2006	82643R	**163712030**
Liberty 4T Eu3	200	2006	2008	82643R	**163712030**
Liberty 4T Sport Eu3	200	2006	2007	82643R	**163712030**
Liberty Rst	200	2004	2004	82643R	**163712030**
Liberty Sport	200	2006	2006	82643R	**163712030**
Vespa Granturismo	200	2006	2007	82644R	**163712070**
X8	200	2005	2007	82644R	**163712070**
X9	200	2002	2003	82644R	**163712070**
X9 Evolution	200	2003	2003	82644R	**163712070**
Beverly	250	2006	2007	82723R	**163712200**
Beverly Cruiser	250	2007	2009	82723R	**163712200**
Beverly Eu3 Mic	250	2007	2007	82723R	**163712200**
Beverly Ie Eu3	250	2006	2008	82723R	**163712200**
Beverly Rst	250	2004	2005	82723R	**163712200**
Beverly Sport	250	2006	2008	82723R	**163712200**
Beverly Tourer Eu3	250	2007	2009	82723R	**163712200**
Carnaby	250	2008	2008	82723R	**163712200**
Mp3	250	2006	2008	82723R	**163712200**
Mp3 Lt	250	2008	2009	82723R	**163712200**
Mp3 Mic	250	2008	2009	82723R	**163712200**
Vespa Gt 60 Eu3	250	2006	2007	82723R	**163712200**
Vespa Gts	250	2005	2016	82723R	**163712200**
Vespa Gts Abs	250	2005	2012	82723R	**163712200**
Vespa Gtv	250	2006	2009	82723R	**163712200**
Vespa Gtv 4T Navy Eu3	250	2007	2007	82723R	**163712200**
X Evo	250	2007	2016	82723R	**163712200**
X7 Eu3	250	2008	2008	82723R	**163712200**
X8 Eu3	250	2005	2008	82723R	**163712200**
X9 Evolution	250	2004	2004	82723R	**163712200**
X9 Evolution	250	2006	2006	82723R	**163712200**
Beverly Ie Abs E4	300	2016	2016	82723R	**163712200**
Beverly Rst 4T 4V Ie Eu3	300	2010	2015	82723R	**163712200**
Beverly Tourer Eu3	300	2009	2010	82723R	**163712200**

Modello *Model*	CC	Da *From*	A *To*	OEM	Codice RMS *RMS Code*
Carnaby Cruiser	300	2009	2012	82723R	**163712200**
Mp3 300 Ie Lt	300	2010	2011	82723R	**163712200**
Mp3 300 Ie Mic	300	2010	2011	82723R	**163712200**
Mp3 4T 4V Ie Erl Ibrido	300	2010	2013	82723R	**163712200**
Mp3 4T 4V Ie Lt Ibrido	300	2010	2011	82723R	**163712200**
Mp3 Ie E4 Lt Business-Sport Abs	300	2016	2016	82723R	**163712200**
Mp3 Ie Lt- Ie Lt Sport	300	2011	2014	82723R	**163712200**
Mp3 Ie Lt Touring	300	2011	2013	82723R	**163712200**
Mp3 Ie Touring	300	2011	2012	82723R	**163712200**
Mp3 Lt Business-Sport Abs-Enjoy	300	2014	2016	82723R	**163712200**
Mp3 Yourban Erl	300	2011	2015	82723R	**163712200**
Mp3 Yourban Lt Erl	300	2011	2012	82723R	**163712200**
Vespa Gts Ie & Touring	300	2012	2016	82723R	**163712200**
Vespa Gts Ie Abs E4	300	2016	2016	82723R	**163712200**
Vespa Gts Ie Touring	300	2011	2012	82723R	**163712200**
Vespa Gts Super	300	2008	2016	82723R	**163712200**
Vespa Gts Super Sport	300	2010	2013	82723R	**163712200**
Vespa Gtv 4T 4V Ie	300	2010	2013	82723R	**163712200**
Vespa Gtv Via Montenapoleone	300	2010	2010	82723R	**163712200**
X7 Evo Ie Eu3	300	2009	2010	82723R	**163712200**
Beverly 4T 4V Ie Eu3 Sport Touring	350	2011	2014	82992R	**163712280**
Beverly 4T St Ie Abs	350	2016	2016	82992R	**163712280**
X10 4T 4V Ie Eu3	350	2012	2015	82992R	**163712280**
Beverly Eu3	400	2006	2007	827889	**163712100**
Beverly Tourer Eu3	400	2008	2010	827889	**163712100**
Mp3	400	2007	2008	827889	**163712100**
Mp3 Ie Lt - Mp3 Ie Lt Sport	400	2008	2010	827889	**163712100**
Mp3 Ie Lt Touring	400	2011	2011	827889	**163712100**
Mp3 Mic	400	2008	2010	827889	**163712100**
Mp3 Rl Touring	400	2011	2011	827889	**163712100**
X Evo	400	2007	2011	827889	**163712100**
X8 Eu3	400	2006	2008	827889	**163712100**
Beverly	500	2002	2006	827889	**163712100**
Beverly Cruiser	500	2007	2012	827889	**163712100**
Beverly Eu3	500	2006	2008	827889	**163712100**
Mp3 Lt Business Abs	500	2014	2016	827889	**163712100**
Mp3 Lt Sport - Business	500	2011	2013	827889	**163712100**
Mp3 Rl Sport - Business	500	2011	2012	827889	**163712100**
Mp3 Sport Abs	500	2014	2015	827889	**163712100**
X10 4T 4V Ie Eu3	500	2012	2014	827889	**163712100**
X9	500	2001	2002	827889	**163712100**
X9 Evolution	500	2003	2007	827889	**163712100**
X9 Evolution Abs	500	2006	2007	827889	**163712100**
SUZUKI					
Uc Epicuro X-K1	125	1999	2001	12760-04B00-000	**163712090**
Uh125 Burgman K2-K6	125	2002	2006	12760-04B00-000	**163712090**
Uh125 Burgman K7-L0	125	2007	2010	12760-04B00-000	**163712090**
Uh125 Burgman L1	125	2011	2012	12760-04B00-000	**163712090**
Uh125 Burgman L3	125	2013	2013	12760-04B00-000	**163712090**
Uh125 Burgman L4	125	2014	2014	12760-04B00-000	**163712090**
Uh125 Burgman L6	125	2016	2016	12760-04B00-000	**163712090**
Ux Sixteen K8-L0	125	2008	2010	12760-055A0-000	**163712060**
Ux Sixteen L1	125	2011	2011	12760-055A0-000	**163712060**
Uc Epicuro X-K1	150	1999	2001	12760-04B00-000	**163712090**
Uh200 Burgman K2-K6	150	2002	2006	12760-04B00-000	**163712090**
Ux Sixteen K8-L0	150	2008	2010	12760-055A0-000	**163712060**

Modello *Model*	CC	Da *From*	A *To*	OEM	Codice RMS *RMS Code*
Ux Sixteen L1	150	2011	2011	12760-055A0-000	**163712060**
Uh200 Burgman K7-L0	200	2007	2010	12760-04B00-000	**163712090**
Uh200 Burgman L1	200	2011	2012	12760-04B00-000	**163712090**
Uh200 Burgman L3	200	2013	2013	12760-04B00-000	**163712090**
Uh200 Burgman L4	200	2014	2014	12760-04B00-000	**163712090**
Uh200 Burgman L6	200	2016	2016	12760-04B00-000	**163712090**
Uh200(A) Burgman L5	200	2015	2015	12760-04B00-000	**163712090**
An250 Burgman K3-K6	250	2003	2006	12760-19B71-000	**163712150**
An250 Burgman W-K2	250	1998	2002	12760-19B71-000	**163712150**
Dr350s L-R	350	1990	1994	12760-19B71-000	**163712150**
Dr350se R-W	350	1994	1998	12760-19B71-000	**163712150**
An400 Burgman K3-K6	400	2003	2006	12760-19B71-000	**163712150**
An400 Burgman K7-L0	400	2007	2010	12760-19F01-000	**163712160**
An400 Burgman L1	400	2011	2011	12760-19F01-000	**163712160**
An400 Burgman L2	400	2012	2012	12760-19F01-000	**163712160**
An400 Burgman L3	400	2013	2013	12760-19F01-000	**163712160**
An400 Burgman L4	400	2014	2014	12760-19F01-000	**163712160**
An400 Burgman L5	400	2015	2015	12760-19F01-000	**163712160**
An400 Burgman L6	400	2016	2016	12760-19F01-000	**163712160**
An400 Burgman X-K2	400	1999	2002	12760-19B71-000	**163712150**
Lt-A400f Kingquad 4X4 K8-L0	400	2008	2010	12760-19B71-000	**163712150**
Lt-A400f Kingquad 4X4 L1	400	2011	2011	12760-19B71-000	**163712150**
Lt-F Kingquad Fs 4X2 K8-L0	400	2008	2010	12760-19B71-000	**163712150**
Lt-F Kingquad Fs 4X4 K8-L0	400	2008	2010	12760-19B71-000	**163712150**
Lt-F Kingquad Fs 4X4 L1	400	2011	2011	12760-19B71-000	**163712150**
Lt-F Kingquad Fs 4X4 L2	400	2012	2012	12760-19B71-000	**163712150**
An650 Burgman L4	650	2014	2014	12760-19F01-000	**163712160**
Dl650 V-Strom K4-K6	650	2004	2006	12760-19F00-000	**163712160**
Dl650 V-Strom K7-L0	650	2007	2010	12760-19F01-000	**163712160**
Dl650 V-Strom L1	650	2011	2011	12760-19F01-000	**163712160**
Dl650 V-Strom L2	650	2012	2012	12760-19F01-000	**163712160**
Dl650a V-Strom Abs L3	650	2013	2013	12760-19F01-000	**163712160**
Dl650a V-Strom Abs L4	650	2014	2014	12760-19F01-000	**163712160**
Dl650a V-Strom Abs L5	650	2015	2015	12760-19F01-000	**163712160**
Dl650a(Ue)/Xa(Ue)L6 V-Strom	650	2016	2016	12760-19F01-000	**163712160**
Dl650xt V-Strom	650	2015	2015	12760-19F01-000	**163712160**
Sfv Gladius K9-L0	650	2009	2010	12760-19F01-000	**163712160**
Sfv Gladius L1	650	2011	2011	12760-19F01-000	**163712160**
Sfv Gladius L2	650	2012	2012	12760-19F01-000	**163712160**
Sfv Gladius L3	650	2013	2013	12760-19F01-000	**163712160**
Sfv Gladius L4	650	2014	2014	12760-19F01-000	**163712160**
Sfv650(U/A/Ua)Gladius L5	650	2015	2015	12760-19F01-000	**163712160**
Sv650 K3-K7	650	2003	2007	12760-19F00-000	**163712160**
Sv650 K8-L0	650	2008	2010	12760-19F01-000	**163712160**
Sv650 X-K2	650	1999	2002	12760-19F00-000	**163712160**
Sv650a L7	650	2017	2017	12760-19F01-000	**163712160**
Sv650sl5	650	2015	2015	12760-19F01-000	**163712160**
SYM					
Cinderella	50	1999	2002	1C14401A31000	**163712250**
Fiddle II	50	2008	2008	1C14401BE2A00	**163712010**
Fiddle II S	50	2009	2013	1C14401A1A000	**163712210**
Fiddle III	50	2014	2014	1C14401A1A000	**163712210**
Jet4	50	2009	2010	1C14401A1A000	**163712210**
Mio	50	2006	2007	1C14401A1A000	**163712210**
Mio	50	2009	2009	1C14401A1A000	**163712210**
Simply II	50	2014	2014	1C14401A1A000	**163712210**
Symphony	50	2009	2009	1C14401A1A000	**163712210**
Symphony S	50	2010	2014	1C14401A1A000	**163712210**
Symphony Sr	50	2010	2014	1C14401A1A000	**163712210**
Symphony St	50	2015	2015	1C14401A1A000	**163712210**
Symply II	50	2009	2009	1C14401A1A000	**163712210**
X Pro	50	2013	2013	1C14401A1A000	**163712210**
Cinderella	100	1999	2001	1C14401A31000	**163712250**
Mio Eu2	100	2005	2006	1C14401A31000	**163712250**
Mio Eu3	100	2007	2008	1C14401A31000	**163712250**
Attila	125	1999	2000	1C14401M900	**163712030**
Euro Mx	125	2002	2002	1C14401M900	**163712030**
Euro Mx E2	125	2003	2004	1C14401M900	**163712030**
Fiddle II	125	2008	2009	1C14401V000	**163712040**
Fiddle II	125	2010	2013	1C14401F6A000	**163712050**
Fiddle III	125	2014	2014	1C14401M900	**163712030**
Gts Joymax	125	2006	2007	1C14401M900	**163712030**
Hd Eu2	125	2003	2004	1C14401M900	**163712030**
Hd Eu3	125	2007	2008	1C14401M900	**163712030**
Hd Evo	125	2005	2006	1C14401M900	**163712030**
Hd Evo Eu3	125	2007	2008	1C14401M900	**163712030**
Hd Evo Eu3	125	2010	2011	1C14401M900	**163712030**
Hd Evo Tamburo Eu3	125	2008	2009	1C14401M900	**163712030**
Hd2	125	2011	2011	1C14401M900	**163712030**
Hd2	125	2014	2014	1C14401M900	**163712030**
Jet V	125	2011	2011	1C14401M900	**163712030**
Jet4	125	2009	2010	1C14401F6A000	**163712050**
Joyride	125	2001	2002	1C14401M900	**163712030**
Joyride Eu2	125	2003	2006	1C14401M900	**163712030**
Joyride Eu3	125	2007	2007	1C14401M900	**163712030**
Joyride Evo	125	2009	2010	1C14401M900	**163712030**
Joyride Evo	125	2013	2014	1C14401M900	**163712030**
Megalo	125	2006	2007	1C14401M900	**163712030**
New Duke	125	2000	2001	1C14401V000	**163712040**
Shark	125	1999	2002	1C14401M900	**163712030**
Super Duke	125	1999	2002	1C14401V000	**163712040**
Symphony	125	2009	2009	1C14401F6A000	**163712050**
Symphony S	125	2009	2010	1C14401F6A000	**163712050**
Symphony S	125	2012	2014	1C14401F6A000	**163712050**
Symphony Sr	125	2010	2010	1C14401F6A000	**163712050**
Symphony Sr	125	2012	2014	1C14401F6A000	**163712050**
Symphony St	125	2015	2015	1C14401M900	**163712030**
Symphony St Euro4	125	2016	2016	1C14401M900	**163712030**
Symply	125	2007	2008	1C14401V000	**163712040**
Symply II	125	2009	2010	1C14401V000	**163712040**
Symply II	125	2014	2014	1C14401F6A000	**163712050**
Vs	125	2006	2006	1C14401M900	**163712030**
Vs Eu3	125	2007	2008	1C14401M900	**163712030**
X Pro	125	2013	2013	1C14401F6A000	**163712050**
Attila	150	2000	2001	1C14401M900	**163712030**
Euro Mx	150	2002	2002	1C14401M900	**163712030**
Euro Mx Eu2	150	2003	2004	1C14401M900	**163712030**
Fiddle II	150	2010	2010	1C14401F6A000	**163712050**
Fiddle II	150	2012	2012	1C14401F6A000	**163712050**
Joyride	150	2001	2002	1C14401M900	**163712030**
Shark	150	2000	2001	1C14401M900	**163712030**
Symphony S	150	2009	2010	1C14401F6A000	**163712050**
Symphony S	150	2012	2014	1C14401F6A000	**163712050**
Symphony Sr	150	2010	2010	1C14401F6A000	**163712050**
Symphony Sr	150	2012	2014	1C14401F6A000	**163712050**
Vs	150	2006	2006	1C14401M900	**163712030**



Modello *Model*	CC	Da *From*	A *To*	OEM	Codice RMS *RMS Code*
Vs Eu3	150	2007	2008	1C14401M900	**163712030**
Track Runner	180	2006	2007	1C14401M900	**163712030**
Fiddle III	200	2015	2015	1C14401M900	**163712030**
Hd Eu2	200	2003	2004	1C14401M900	**163712030**
Hd Eu3 I	200	2007	2007	1C14401M900	**163712030**
Hd Evo Eu2	200	2005	2006	1C14401M900	**163712030**
Hd Evo Eu3 I	200	2007	2007	1C14401M900	**163712030**
Hd Evo I Eu3	200	2010	2012	1C14401M900	**163712030**
Hd Evo I Tamburo Eu3	200	2008	2009	1C14401M900	**163712030**
Hd2 I	200	2011	2011	1C14401M900	**163712030**
Hd2 I	200	2014	2014	1C14401M900	**163712030**
Joyride	200	2003	2003	1C14401M900	**163712030**
Joyride Eu2	200	2003	2006	1C14401M900	**163712030**
Joyride Evo I	200	2009	2009	1C14401M900	**163712030**
Joyride Evo I	200	2013	2014	1C14401M900	**163712030**
Joyride I Eu3	200	2007	2009	1C14401M900	**163712030**
Joyride I Evo	200	2010	2010	1C14401M900	**163712030**
Symphony St	200	2015	2015	1C14401M900	**163712030**
Joymax Eu3 I	250	2007	2008	1C14401RFA000	**163712260**
Sb 250N i	250	2012	2012	1C14401RFA000	**163712260**
Citycom	300	2008	2009	1C14401RFA000	**163712260**
Citycom Efi	300	2010	2011	1C14401RFA000	**163712260**
Citycom I Cbs	300	2012	2012	1C14401RFA000	**163712260**
Citycom S 300 I Cbs	300	2015	2015	1C14401RFA000	**163712260**
Joymax Evo	300	2009	2009	1C14401RFA000	**163712260**
Joymax Evo I	300	2010	2010	1C14401RFA000	**163712260**
Joymax I	300	2012	2012	1C14401RFA000	**163712260**
Joymax I	300	2014	2014	1C14401RFA000	**163712260**
Joymax I Abs	300	2013	2014	1C14401RFA000	**163712260**
Quad Lander	300	2008	2008	1C14401RFA000	**163712260**
Quad Lander S	300	2007	2008	1C14401RFA000	**163712260**
Maxsym I	400	2011	2012	1C14401L4A000	**163712270**
Maxsym I Abs	400	2012	2012	1C14401L4A000	**163712270**
YAMAHA					
Ns50f Aerox F	50	2014	2016	5STE21900000	**163712010**
Xf Giggle	50	2008	2008	5STE21900000	**163712010**
Yn F Neo's 4	50	2009	2015	5STE21900000	**163712010**
Mt125	125	2015	2016	94568A809600	**163712070**
Mt125a	125	2015	2017	94568A809600	**163712070**
Vp X-City	125	2008	2011	94568A809600	**163712070**
Wr125r	125	2009	2011	94568A809600	**163712070**
Wr125x	125	2009	2011	94568A809600	**163712070**
Wr125x	125	2013	2014	94568A809600	**163712070**
Xn Teo's	125	2000	2000	945914809400	**163712130**
Xq Maxster	125	2001	2002	945914809400	**163712130**
Yp125 Majesty	125	1998	2002	945914809400	**163712130**
Yp125e Majesty	125	2003	2009	945914809400	**163712130**
Yp125r X-Max	125	2006	2016	94568A809600	**163712070**
Yp125r X-Max Abs	125	2011	2011	94568A809600	**163712070**
Yp125ra X-Max Abs	125	2013	2017	94568A809600	**163712070**
Yzf-R125	125	2008	2016	94568A809600	**163712070**
Yzf-R125a	125	2015	2017	94568A809600	**163712070**
Mws150-A Tricity	150	2016	2016	94568A809600	**163712070**
Xn Teo's	150	2001	2002	945914809400	**163712130**
Xq Maxster	150	2001	2002	945914809400	**163712130**
Yp150 Majesty	150	2000	2002	945914809400	**163712130**
Yp180e Majesty	180	2003	2006	945914809400	**163712130**
Vp X-City	250	2007	2015	945821710400	**163712180**

Modello *Model*	CC	Da *From*	A *To*	OEM	Codice RMS *RMS Code*
Yp250 Majesty	250	1996	1998	945821710400	**163712180**
Yp250 Majesty	250	2000	2001	945821710400	**163712180**
Yp250 Majesty	250	2002	2003	945816310400	**163712180**
Yp250 Majesty Abs	250	2003	2003	945816310400	**163712180**
Yp250 Majesty Dx	250	1998	1998	945816310400	**163712180**
Yp250 Majesty Dx	250	1999	1999	945821710400	**163712180**
Yp250r Black X-Max	250	2009	2009	945821710400	**163712180**
Yp250r X-Max	250	2005	2012	945821710400	**163712180**
Yp250r X-Max	250	2012	2016	945821710400	**163712180**
Yp250r X-Max Sport	250	2011	2012	945821710400	**163712180**
Yp250ra X-Max Abs	250	2011	2012	945821710400	**163712180**
Yp250ra X-Max Abs	250	2012	2016	945821710400	**163712180**
Xc Versity	300	2003	2006	945821710400	**163712180**
Yp Ra X-Max Momodesign Abs	400	2014	2014	945821813600	**163712120**
Yp400 Majesty	400	2004	2011	945821813600	**163712120**
Yp400 Majesty Abs	400	2007	2011	945821813600	**163712120**
Yp400r X-Max	400	2013	2014	945821813600	**163712120**
Yp400r X-Max Momodesign	400	2014	2014	945821813600	**163712120**
Yp400ra X-Max Abs	400	2014	2014	945821813600	**163712120**
Xp T-Max	500	2001	2011	945821813200	**163712110**
Xp T-Max Abs	500	2005	2011	945821813200	**163712110**
Xp T-Max Abs Sv	500	2010	2011	945821813200	**163712110**
Xp T-Max Black Max	500	2006	2006	945821813200	**163712110**
Xp T-Max Black Max-Night Max	500	2007	2007	945821813200	**163712110**
Xp T-Max Sv	500	2011	2011	945821813200	**163712110**
Xp T-Max White Max	500	2010	2010	945821813200	**163712110**
Xp T-Max	530	2012	2016	945915313400	**163712310**
Xp T-Max Abs	530	2012	2016	945915313400	**163712310**
Xp T-Max Sp	530	2015	2015	945915313400	**163712310**
Xp T-Max Sp Abs	530	2015	2016	945915313400	**163712310**

Le catene di distribuzione **KMC** sono prodotte con materiali di alta qualità, metodi di stampaggio avanzati e speciali trattamenti termici delle piastre. Queste procedure ottimizzano l'area di contatto tra le piastre della catena e le ruote dentate ed aumentano la resistenza a fatica della catena, assicurando una diminuzione del rumore di funzionamento. Queste qualità rendono le catene di distribuzione **KMC** un'ottima alternativa al ricambio originale per qualità, durata e prezzo.

KMC *timing chains are made with an high quality steel, with advanced stamping method and exclusive heat-treatment for link plates. It maximizes contact area between links and sprocket for a better chain strength, impact resistence and low running noise. These properties make* ***KMC*** *timing chains a very good option of OEM timing chains in terms of quality, reliability and price.*



APRILIA: R.O. 96933R
DERBI: R.O. 96933R
PIAGGIO: R.O. 96933R

163712020

MODELLO - *MODEL*
2023LN



APRILIA: R.O. 82643R
DERBI: R.O. 82643R
HONDA: R.O. 14401-KRJ-901
KYMCO: R.O. 00123110
PEUGEOT: R.O. 756294
PIAGGIO: R.O. 82643R
SYM: R.O. 1C14401M900

163712030

MODELLO - *MODEL*
2023LN



HONDA: R.O. 14401-GFM-971
SYM: R.O. 1C14401V000

163712040

MODELLO - *MODEL*
2023LN



HONDA: R.O. 14401-KSS-931
PEUGEOT: R.O. 802130
SYM: R.O. 1C14401F6A000

163712050

MODELLO - *MODEL*
2023LN



SUZUKI: R.O. 12760-055A0-000

163712060

MODELLO - *MODEL*
2034LW



APRILIA: R.O. 82644R
DERBI: R.O. 82644R
GILERA: R.O. 82644R
MALAGUTI: R.O. 51700400
PEUGEOT: R.O. 766961
PIAGGIO: R.O. 82644R
YAMAHA: R.O. 94568A809600

163712070

MODELLO - *MODEL*
2023LN



KYMCO: R.O. 00123092

163712080

MODELLO - *MODEL*
2023LN



SUZUKI: R.O. 12760-04B00-000

163712090

MODELLO - *MODEL*
2023LW



APRILIA: R.O. 827889
GILERA: R.O. 827889
MALAGUTI: R.O. 41701000
PEUGEOT: R.O. 759717
PIAGGIO: R.O. 827889

163712100

MODELLO - *MODEL*
2034LN



YAMAHA: R.O. 945821813200

163712110

MODELLO - *MODEL*
2034LN



YAMAHA: R.O. 945821813600

163712120

MODELLO - *MODEL*
2034LN



KYMCO: R.O. 00123912
MALAGUTI: R.O. 71700800
MBK: R.O. 945914809400
YAMAHA: R.O. 945914809400

163712130

MODELLO - *MODEL*
2023LW



APRILIA: R.O. AP0297930

163712140

MODELLO - *MODEL*
2023LW



SUZUKI: R.O. 12760-19B71-000

163712150

MODELLO - *MODEL*
2034LW



SUZUKI: R.O. 12760-19F00-000

163712160

MODELLO - *MODEL*
2034LW



HONDA: R.O. 14401-MCT-003

163712170

MODELLO - *MODEL*
2034LN



APRILIA: R.O. AP8122434
MALAGUTI: R.O. 71701200
MBK: R.O. 945821710400
YAMAHA: R.O. 945816310400

163712180

MODELLO - *MODEL*
2023LW



HONDA: R.O. 14401-KFB-751

163712190

MODELLO - *MODEL*
2023LN



APRILIA: R.O. 82723R
DERBI: R.O. 82723R
GILERA: R.O. 82723R
PEUGEOT: R.O. 758715
PIAGGIO: R.O. 82723R

163712200

MODELLO - *MODEL*
2023LN



PEUGEOT: R.O. 801526
SYM: R.O. 1C14401A1A000

163712210

MODELLO - *MODEL*
2023LN



PIAGGIO: R.O. 436246

163712240

MODELLO - *MODEL*
2023LN



SYM: R.O. 1C14401A31000

163712250

MODELLO - *MODEL*
2023LN



SYM: R.O. 1C14401RFA000

163712260

MODELLO - *MODEL*
2034LN



KYMCO: R.O. 00114051
SYM: R.O. 1C14401L4A000

163712270

MODELLO - *MODEL*
2034LN



PIAGGIO: R.O. 82992R

163712280

MODELLO - *MODEL*
2023LN



KYMCO: R.O. 00123058

163712290

MODELLO - *MODEL*
2034LN



YAMAHA: R.O. 945915313400

163712310

MODELLO - *MODEL*
2034LN



LML: R.O. SF5130132

163712320

MODELLO - *MODEL*
2023LN

Codice KMC *KMC Code*	P Passo *Pitch*	W Larghezza interna *Roller link width*	T1 Spessore maglia esterna *Outer plate thickness*	T2 Spessore maglia interna *Inner plate thickness*	H Altezza maglia interna *Inner plate height*	d Diam. Perno *Pin diameter*	L Lunghezza perno *Over all width. Riv.*	Carico rottura minimo *Minimum tensile strength*	Carico rottura medio *Average tensile strength*
2023LN	6,35 mm	3,05 mm	0,7 mm	1,0 mm	6,70 mm	2,42 mm	6,10 mm	550 kgf	660 kgf
2034LN	6,35 mm	5,10 mm	0,7 mm	1,0 mm	6,70 mm	2,42 mm	8,25 mm	800 kgf	1100 kgf
2023LW	6,35 mm	3,05 mm	0,7 mm	1,0 mm	6,72 mm	2,72 mm	6,10 mm	520 kgf	620 kgf
2034LW	6,35 mm	5,10 mm	0,7 mm	1,0 mm	6,72 mm	2,72 mm	8,25 mm	700 kgf	850 kgf

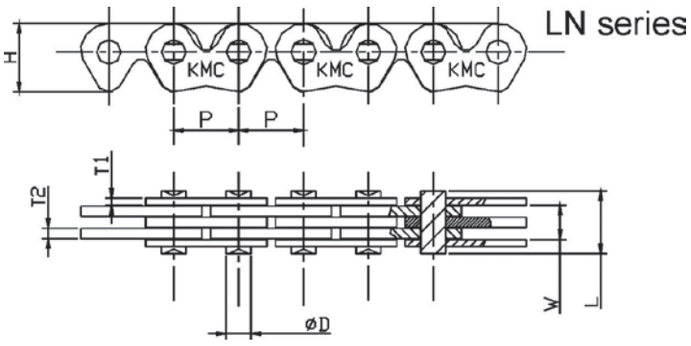

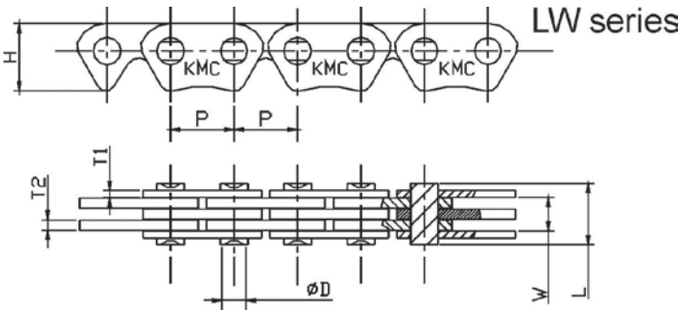



GIUNTI CATENE DISTRIBUZIONE

TIMING CHAINS CONNECTING LINKS

163719180

Confezione 10 Pz. | *10 Pcs Packing*

2023 LN



163719190

Confezione 10 Pz. | *10 Pcs Packing*

2023 LW



163719200

Confezione 10 Pz. | *10 Pcs Packing*

2034 LN



163719210

Confezione 10 Pz. | *10 Pcs Packing*

2034 LW





163714010

KYMCO 125: B&W Euro2 03-04 • B&W 00 • Dink Euro3 06-07 • Dink 97-98 • Dink Classic Euro2 03 • Dink Classic 02 • Dink LX 98-00 • Gran Dink Euro2 03-04 • Gran Dink 01-02
KYMCO 200: Dink Classic 04 • Dink Euro3 I 06-07
R.O. 00123913-00123914



163714020

KYMCO 125: Downtown i 09 • K-XCT i 12-14 • People GTI 10-14
R.O. 00114104-00114105



163714030

KYMCO 200: Downtown i 10 • People GTI 10-14
KYMCO 300: Downtown i 09 • Downtown ABS i 11 • Downtown ABS 10 • Downtown i 11 • K-XCT i ABS 14 • K-XCT i 12 • People GTI ABS 12-14 • People GTI 10-14
KYMCO 350: Downtown i ABS 15
KYMCO 400: X-Citing i ABS 14-15 • X-Citing i 13-15
R.O. 00114090-00114091



163714040

KYMCO 50: Agility 4T Carry 11 • Agility 4T R10 06-08 • Agility R12 07-08 • Agility R16 08-12 • Agility Plus 4T 14 • Agility R12 05 • Agility RS 09 • Dink 4T 07 • Filly LX 01-02 • Filly 98-00 • Like 4T 01-02 • People S 4T 06-08 • Sento 08 • Super 8 4T 09-13 • Super 8 07 • Vitality 4T 04
R.O. 00103613-00103614



163714050

KYMCO 250: B&W Euro2 03 • B&W 00 • Grand Dink Euro2 03-04 • Grand Dink 01-02 • KXR 03-04 • MXU 05 • People LC 03-04 • People S i 07 • People S 06 • X-Citing i 06-07 • X-Citing 05 • Yup 03
R.O. 00123911-00123917



163714060

KYMCO 125: Agility 4T Eu3 06-08 • Agility 4T 06 • Agility Carry 11 • Agility Plus 14 • Agility R16 08-12 • Agility RS 09 • Like LX 12 • Like 09 • Movie Euro3 06-07 • Movie XL Euro2 03-04 • Movie XL 01 • Movie 99-00 • People Euro2 03 • People 99-00 • People Euro3 07-11 • People One i DD 15 • People One i 13 • People S DD Euro3 07-08 • People S 05 • Super 8 08-09 • Vivio 00
KYMCO 200: Agility R16 08-09 • Movie Euro3 06-07 • Agility i R16 10 • Agility i Plus 14 • Agility R16 12 • Like i 09 • Like LX 12 • People S i 07 • People S 05
R.O. 00123111-00123112



163714070

KYMCO 500: X-Citing R 09 • X-Citing i R 07-08 • X-Citing i 06-08 • X-Citing 05
R.O. 00123060-00122047



163714080

KYMCO 300: G-Dink 12 • Maxxer 05-06 • MXU R 10 • MXU 05-06 • People S i 08 • X-Citing i R 08-09 • X-Citing i 08
R.O. 00123095-00123096



Modello *Model*	CC	Da *From*	A *To*	Telaio *Frame*	OEM	Codice Dayco *Dayco Code*	Codice RMS *RMS Code*
DUCATI							
Superbike 748 E	748	2001	2002	H300AA	73740102B	**941030**	**163770110**
Superbike 748 S	748	2002	2002	H300AA	73740103B	**941030**	**163770110**
Superbike 749	748	2003	2003	H500AA	73740124A	**94817**	**163770090**
Superbike 749 Dark	748	2004	2006	H500AA	73740124A	**94817**	**163770090**
Superbike 749 R	748	2004	2006	H501AG	73740124A	**94817**	**163770090**
Superbike 749 S	748	2003	2003	H500AA	73740124A	**94817**	**163770090**
Superbike 749 S	748	2004	2004	H500AC	73740124A	**94817**	**163770090**
Superbike 749 S	748	2005	2005	H500AD	73740124A	**94817**	**163770090**
Superbike 749 S	748	2006	2006	H500AC	73740124A	**94817**	**163770090**
Monster 900	900	1993	1999	900M	73740021A	**94819**	**163770070**
Monster 900	900	2000	2002	M200AA	73740021A	**94819**	**163770070**
Monster 900 City	900	1999	1999	900M	73740021A	**94819**	**163770070**
Monster 900 Cromo	900	1998	1998	900M	73740021A	**94819**	**163770070**
Monster 900 Dark City	900	1999	1999	900M	73740021A	**94819**	**163770070**
Monster 900 S	900	1998	1998	900M	73740021A	**94819**	**163770070**
Superbike 907 I.E.	900	1990	1993	906PI2	73740021A	**94819**	**163770070**
Supersport 900 S	900	2002	2002	V100AA	73710081A	**94819**	**163770070**
Supersport 900 Ss	900	1991	1997	906SC2	73740021A	**94819**	**163770070**
Supersport 900 Ss	900	1998	2002	V100AA	73740021A	**94819**	**163770070**
Supersport 900 Ss Final Ed.	900	1998	1998	906SC2	73740021A	**94819**	**163770070**
Monster S4	916	2001	2002	M400AA	73740102B	**941030**	**163770110**
Monster S4 Fogarty	916	2002	2002	M400AA	73740102B	**941030**	**163770110**
Sport Touring St4	916	1999	2003	S200AA	73710041A	**941030**	**163770110**
Sport Touring St4	916	2003	2003	S200AA	73740102B	**941030**	**163770110**
Sport Touring St2	944	1997	2000	S100AA	73740021A	**94819**	**163770070**
Monster S4R	996	2003	2004	M400AA	73710101A	**941030**	**163770110**
Monster S4R	996	2005	2006	M405AA	73710101A	**941030**	**163770110**
Sport Touring St4 S	996	2001	2003	S2001B	73710101A	**941030**	**163770110**
Sport Touring St4 S	996	2004	2004	S301AA4B	73710101A	**941030**	**163770110**
Sport Touring St4 S	996	2005	2005	S301AA	73740103B	**941030**	**163770110**
Sport Touring St4 S Abs	996	2003	2003	S200AA	73710101A	**941030**	**163770110**
Sport Touring St4 S Abs	996	2004	2005	S301AA	73710101A	**941030**	**163770110**
Superbike 998	998	2002	2003	H200AA	73740124A	**94817**	**163770090**
Superbike 998 Final Ed.	998	2004	2004	H400AA	73740124A	**94817**	**163770090**
Superbike 998 Final Ed. Single	998	2004	2004	H400AA	73740124A	**94817**	**163770090**
Superbike 998 Matrix	998	2004	2004	-	73740124A	**94817**	**163770090**
Superbike 998 Matrix Single-Se	998	2004	2004	-	73740124A	**94817**	**163770090**
Superbike 998 R	998	2002	2002	H200AA	73740124A	**94817**	**163770090**
Superbike 998 Rs	998	2002	2003	H200AA	73740124A	**94817**	**163770090**
Superbike 998 S Bayliss	998	2002	2002	H200AA	73740124A	**94817**	**163770090**
Superbike 998 S Bostrom	998	2002	2002	H200AA	73740124A	**94817**	**163770090**
Superbike 999	998	2003	2003	H400AA	73740124A	**94817**	**163770090**
Superbike 999	998	2004	2006	H400AE	73740124A	**94817**	**163770090**
Superbike 999 R	998	2003	2003	H200AA	73740124A	**94817**	**163770090**
Superbike 999 R	998	2004	2004	H401AA	73740124A	**94817**	**163770090**
Superbike 999 R	998	2005	2005	H402AA	73740124A	**94817**	**163770090**
Superbike 999 R	998	2006	2006	H401AA	73740124A	**94817**	**163770090**
Superbike 999 R Xerox	998	2006	2006	H401AA	73740124A	**94817**	**163770090**
Superbike 999 S	998	2003	2003	H400AA	73740124A	**94817**	**163770090**
Superbike 999 S	998	2004	2006	H400AE	73740124A	**94817**	**163770090**
Monster 1000	1000	2003	2005	M400AA	73740211A	**941073**	**163770120**
Monster 1000 S	1000	2005	2005	M404AA	73740211A	**941073**	**163770120**
Monster S2R 1000	1000	2006	2008	M416AA	73740211A	**941073**	**163770120**
Monster S4R	1000	2007	2008	4417AA	73740124A	**94817**	**163770090**
Monster S4Rs	1000	2006	2008	4417AA	73740124A	**94817**	**163770090**
Monster S4Rs Tricolore	1000	2008	2008	4417AA	73740124A	**94817**	**163770090**
Multistrada 1000	1000	2003	2004	A100AA	73740211A	**941073**	**163770120**
Multistrada 1000	1000	2005	2006	A100AB	73740211A	**941073**	**163770120**

Modello *Model*	**CC**	**Da** *From*	**A** *To*	**Telaio** *Frame*	**OEM**	**Codice Dayco** *Dayco Code*	**Codice RMS** *RMS Code*
Multistrada 1000 S	1000	2005	2006	A100AB	73740211A	**941073**	**163770120**
Sport Touring St3	1000	2004	2007	S300AA	73740211A	**941073**	**163770120**
Sport Touring St3 S Abs	1000	2006	2007	S302AA	73740211A	**941073**	**163770120**
Sportclassic Gt1000	1000	2007	2010	C103AA	73740211A	**941073**	**163770120**
Sportclassic Gt1000 Touring	1000	2009	2009	C103AB	73740211A	**941073**	**163770120**
Sportclassic Paul Smart	1000	2006	2006	C100AA	73740211A	**941073**	**163770120**
Sportclassic Sport 1000	1000	2007	2008	C102AA	73740211A	**941073**	**163770120**
Sportclassic Sport 1000 S	1000	2007	2009	C102AB	73740211A	**941073**	**163770120**
Sportclassic Sport 1000 Single-Se	1000	2006	2006	1WABP	73740211A	**941073**	**163770120**
Sportclassic Sport 1000 Single-Se	1000	2006	2007	C101AA	73740211A	**941073**	**163770120**
Sportclassic Sport 1000 Single-Se	1000	2007	2007	C102AA	73740211A	**941073**	**163770120**
Supersport 1000 Ss	1000	2003	2003	V500AA	73740211A	**941073**	**163770120**
Supersport 1000 Ss	1000	2004	2006	V503AA	73740211A	**941073**	**163770120**
Scrambler 1100	1079	2018	2018	-	73740211A	**941073**	**163770120**
Scrambler 1100 Special	1079	2019	2019	-	73740211A	**941073**	**163770120**
Hypermotard 1100	1100	2008	2009	B100AA	73740211A	**941073**	**163770120**
Hypermotard 1100 Evo	1100	2010	2012	B103AA\B106AA	73740211A	**941073**	**163770120**
Hypermotard 1100 Evo Sp	1100	2010	2012	B104AA\B107AA	73740211A	**941073**	**163770120**
Hypermotard 1100 S	1100	2008	2009	B100AA	73740211A	**941073**	**163770120**
Monster 1100	1100	2009	2010	M502AA	73740211A	**941073**	**163770120**
Monster 1100 Abs	1100	2010	2010	M505AA	73740211A	**941073**	**163770120**
Monster 1100 Diesel	1100	2013	2013	-	73740211A	**941073**	**163770120**
Monster 1100 Evo Abs	1100	2012	2013	-	73740211A	**941073**	**163770120**
Monster 1100 Evo Anniversary	1100	2013	2013	-	73740211A	**941073**	**163770120**
Monster 1100 S	1100	2009	2010	M502AA	73740211A	**941073**	**163770120**
Monster 1100 S Abs	1100	2010	2010	M502AA	73740211A	**941073**	**163770120**
Multistrada 1100	1100	2007	2009	A109AA	73740211A	**941073**	**163770120**
Multistrada 1100 S	1100	2007	2009	A109AA	73740211A	**941073**	**163770120**

163770070 NEW

DUCATI: R.O. 73740021A



163770090 NEW

DUCATI: R.O. 73740124A



163770110 NEW

DUCATI: R.O. 73740102B



163770120 NEW

DUCATI: R.O. 73740211A





VITI CARTER MOTORE - *CRANKCASE BOLTS*



Dimensioni *Dimensions*	Applicazioni *Applications*	Pezzi *Pcs*	OEM	Codice RMS *RMS Code*	Codice a Barre *Barcode*
M7 x 45 mm	**PIAGGIO 50-90-125:** Vespa 50-90-125 • Vespa Primavera ET3	5	008420	**121858660**	
M7 x 50 mm	**PIAGGIO 125-150-200:** Vespa PX	5	239149	**121858690**	
M7 x 52 mm	**PIAGGIO 125:** Vespa PXE Arcobaleno	10	239153	**121858740**	
M7 x 54 mm	**PIAGGIO 50-90-125:** Vespa 50-90-125 • Vespa Primavera ET3	5	008421	**121858670**	
M7 x 75 mm	**PIAGGIO 50-90-125:** Vespa 50-90-125 • Vespa Primavera ET3	5	008499	**121858650**	
M7 x 80 mm	**PIAGGIO 50-90-125:** Vespa 50-90-125 • Vespa Primavera ET3	5	008419	**121858680**	
M7 x 90 mm	**PIAGGIO 50:** Ape FL-FL2-FL3 • Ape P • Ape TM **PIAGGIO 220:** Ape Car P2-P3 • Ape TM P703	5	015647	**121858760**	
M7 x 95 mm	**PIAGGIO 125-150-200:** Vespa PX	5	239150	**121858700**	

PRIGIONIERI - *STUDS*



Dimensioni *Dimensions*	Adatto Per *Suitable*	Applicazioni *Applications*	Pezzi *Pcs*	OEM	Codice RMS *RMS Code*	Codice a Barre *Barcode*
6 x 26 mm	Scarico *Exhaust*	**PIAGGIO 50-125-180-500**	2	**PIAGGIO:** R.O. 239397	**121856010**	
6 x 33 mm	Scarico *Exhaust*	**PIAGGIO 50:** Vespa 50 • Vespa PK **PIAGGIO 90:** Vespa 90 **PIAGGIO 125:** Vespa Primavera ET3 **PEUGEOT 50:** Buxy • Speedake • SV • Geopolis • Squab • Speedfight • Trekker	2	**PIAGGIO:** R.O. 003918	**121856000**	
6 x 106 mm	Cilindro *Cylinder*	**GILERA - PIAGGIO 50** **MBK 50** Modelli ad aria/liquido con cilindro verticale | *Vertical cylinder AC/LC models*	4	**GILERA-PIAGGIO:** R.O. 239382 **MBK:** R.O. 901160641800	**121856020**	
7 x 35 mm	Carter motore *Crankcase*	**PIAGGIO 50:** Vespa 50 • Vespa PK • Vespa PK XL • Ape 50 • Ape P	10	**PIAGGIO:** R.O. 000480	**121860280**	
7 x 52 mm	Carter motore *Crankcase*	**PIAGGIO 125:** Vespa PX • Vespa GL • Vespa Sprint	10	**PIAGGIO:** R.O. 239153	**121858740**	
7 x 58 mm	Base cilindro *Cylinder Base*	**PIAGGIO 50:** Vespa PK **PIAGGIO 125:** Vespa Primavera ET3 • Vespa PK	10	**PIAGGIO:** R.O. 004515	**121860260**	
7 x 109 mm	Cilindro *Cylinder*	**MALAGUTI 50** **YAMAHA 50** Per modelli ad aria/liquido con cilindro orizzontale | *Horizontal cylinder AC/LC models*	4	**MALAGUTI:** R.O. 7491880 **YAMAHA:** R.O. 901160735300	**121856030**	
7 x 142 mm	Cilindro *Cylinder*	**PIAGGIO 125:** Vespa ET3 • Vespa Primavera • Vespa PX **PIAGGIO 150:** Vespa PX	4	**PIAGGIO:** R.O. 150656	**121856040**	
8 x 36 mm	Flangia *Flange*	**PIAGGIO 50:** Vespa PK • Vespa PK XL • Vepsa N • Vespa FL-FL2 **PIAGGIO 125:** Vespa PK XL • Vespa FL **PIAGGIO 1200:** Porter D120 E5 • Porter Maxxi D120 Euro5	10	**PIAGGIO:** R.O. 000456	**121860250**	
8 x 160 mm	Cilindro *Cylinder*	**PIAGGIO 200:** Vespa PE • Vespa Rally 200 **PIAGGIO 220:** Ape MP • Ape TM • Ape Car	4	**PIAGGIO:** R.O. 016058	**121856130**	



KIT BULLONI/PRIGIONIERI CARTER MOTORE - *BOLT/STUD KIT CRANKCASE*



			Composto da *Composed by*			
Codice RMS *RMS Code*	**Codice a Barre** *Barcode*	**Applicazioni** *Applications*	**Descrizione** *Description*	**Dimensioni** *Dimensions*	**Pezzi** *Pcs*	**Codice RMS** *RMS Code*
121860120		**PIAGGIO 50-90-125:** Vespa 50-90-125 • Vespa Primavera ET3	Bullone | *Bolt*	M7 x 75 mm	3	**121858650**
			Bullone | *Bolt*	M7 x 45 mm	5	**121858660**
			Bullone | *Bolt*	M7 x 54 mm	2	**121858670**
			Bullone | *Bolt*	M7 x 80 mm	1	**121858680**
			Rondella | *Washer*	7 mm	11	**121858720**
			Rondella Grower | *Grower Washer*	7 mm	11	**121858730**
			Dado | *Nut*	M7	11	**121878710**
121860130		**PIAGGIO 125-150:** Vespa PX	Colonnina | *Spacer*		1	**121858620**
			Bullone | *Bolt*	M7 x 50 mm	4	**121858690**
			Bullone | *Bolt*	M7 x 95 mm	1	**121858700**
			Rondella | *Washer*	7 mm	13	**121858720**
			Rondella Grower | *Grower Washer*	7 mm	13	**121858730**
			Bullone | *Bolt*	M7 x 52 mm	52	**121858740**
			Dado | *Nut*	M7	13	**121878710**
121860140		**PIAGGIO 200:** Vespa PE	Bullone | *Bolt*	M7 x 50 mm	4	**121858690**
			Bullone | *Bolt*	M7 x 95 mm	1	**121858700**
			Rondella | *Washer*	7 mm	13	**121858720**
			Rondella Grower | *Grower Washer*	7 mm	13	**121858730**
			Bullone | *Bolt*	M7 x 52 mm	8	**121858740**
			Colonnina | *Spacer*		1	**121860290**
			Dado | *Nut*	M7	13	**121878710**



121860160

KIT PRIGIONIERI CILINDRO | *CYLINDER STUDS KIT*

PIAGGIO 50: Vespa 50
PIAGGIO 125: Vespa Primavera ET3

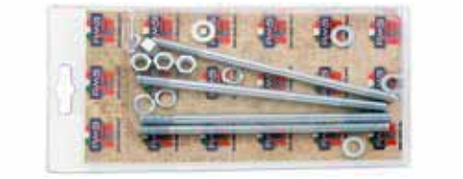

121860110

KIT BULLONE MOTORE | *ENGINE BOLT KIT*

PIAGGIO 50-90-125: Vespa Primavera ET3



121860353

KIT BULLONE MOTORE | *ENGINE BOLT KIT*

PIAGGIO 125-150-200: Vespa Sprint • Vespa GL • Vespa Super
VNX - VLX - VSX - VLA - VLB - VBC



121860363

KIT TUBO MOTORE COMPLETO | *ENGINE TUBE KIT*

PIAGGIO 125-150-200: Vespa Sprint • Vespa GL • Vespa Super
VNX - VLX - VSX - VLA - VLB - VBC





142560011

CUFFIA MOTORE | *CYLINDER COWLING*
Cilindro orizzontale | *Horizontal Cylinder*

MINARELLI - YAMAHA - MBK 50
R.O. 72105400



142560020

142560021

CUFFIA MOTORE | *CYLINDER COWLING*
Cilindro verticale | *Vertical Cylinder*

MINARELLI - YAMAHA - MBK 50
R.O. 3VLE265100



142560110

CUFFIA MOTORE | *CYLINDER COWLING*

PIAGGIO 50: Vespa 50 • Vespa PK • Vespa PK XL • Vespa FL • Vespa PK XL Rush • Vespa N
R.O. 139261



142560120

CUFFIA MOTORE | *CYLINDER COWLING*

PIAGGIO 180: Vespa Rally
PIAGGIO 200: Vespa PX • Vespa PE • Vespa Rally
R.O. 431054



142560130

CUFFIA MOTORE | *CYLINDER COWLING*

PIAGGIO 125-150: Vespa PX
VNX-VLX--VNX2-VLX2-VLR1T-VLR-VLX1
R.O. 843530 - 431056



142560160

CUFFIA MOTORE | *CYLINDER COWLING*

PIAGGIO 125: Vespa Primavera ET3 • Vespa PK • Vespa PK XL
R.O.174702



142560180

CUFFIA MOTORE | *CYLINDER COWLING*

PIAGGIO 220: Ape TM P602 82-83 • Ape TMP703 - P703V - FL2 84-05 • Ape TM 09-15
R.O. 231308



142580090

COPRIVENTOLA IN ACCIAIO CROMATO | *CHROMED STEEL FLYWHEEL COVER*

PIAGGIO 50: Vespa PK • Vespa PK XL • Vespa PK XL Rush • Vespa N • Vespa FL • Ape
R.O. 2447355



142580091

COPRIVENTOLA IN ACCIAIO NERO | *BLACK STEEL FLYWHEEL COVER*

PIAGGIO 50: Vespa PK • Vespa PK XL • Vespa PK XL Rush • Vespa N • Vespa FL • Ape
R.O. 2447355



142580100

COPRIVENTOLA IN ACCIAIO CROMATO | *CHROMED STEEL FLYWHEEL COVER*
Senza avviamento elettrico | *Without electric starter*

PIAGGIO: Vespa PX • Vespa PE



142580101

COPRIVENTOLA IN ACCIAIO NERO | *BLACK STEEL FLYWHEEL COVER*
Senza avviamento elettrico | *Without electric starter*

PIAGGIO: Vespa PX • PE
R.O. 194362



142580140

COPRIVENTOLA IN ACCIAIO NERO | *BLACK STEEL FLYWHEEL COVER*

PIAGGIO 50-90-125: Vespa Primavera
R.O. 133658



ACCESSORI COPRIVENTOLA | *FAN COVER ACCESSORIES*

121858890

VITE ZINCATA COPRIVENTOLA VESPA | *GALVANIZED SCREW FLYWHEEL COVER*
M6 x 12 mm, Testa taglio | *M6 x 12 mm, Flat head*
Conf. 10 Pz. | *10 pcs Pack*

PIAGGIO 125: Vespa Sprint • Vespa GR • Vepsa Super • Vespa Rally 65-76
PIAGGIO 150: Vespa GS • Vespa Super Sport 55-65
R.O. 002856



121830270

SUPPORTO MOTORE ANTIVIBRANTE | *ENGINE MOUNT SILENTBLOCK*

PIAGGIO 50: Vespa 50 • Vespa PK
PIAGGIO 90: Vespa 90
PIAGGIO 125: Vespa Primavera ET3
R.O. 112204



121830283

SUPPORTO MOTORE ANTIVIBRANTE | *ENGINE MOUNT SILENTBLOCK*

PIAGGIO 200: Vespa PE • Vespa PXE Arcobaleno • Vespa Rally
R.O. 174724



121830873

COPPIA SILENTBLOCK | *SILENTBLOCK PAIR*

PIAGGIO 50-90: Vespa 50-90
V5A1-V5B1-V5SA1-V9A1-VMA2



121830200

SUPPORTO ELASTICO MOTORE POSTERIORE APE | *REAR RUBBER ENGINE MOUNTING*

PIAGGIO 220: Ape Car P2-P3 78-85 • Ape MP P501-P601-P601V 78-96
R.O. 105976



121830640

SILENTBLOCK SUPPORTO MOTORE | *ENGINE MOUNT SILENTBLOCK*

MOTORI PIAGGIO 50-125-150-200-250-300
R.O. 272750



121830760

SILENTBLOCK SUPPORTO MOTORE | *ENGINE MOUNT SILENTBLOCK*

KYMCO 250: People LC 03-04 • People S i 250 07 • People S 06 • X-Citing i 06-07 • X-Citing 05-05 • Yup 03
KYMCO 300: G-Dink 12 • People S i 08 • X-Citing i R 08-09 • X-Citing i 08 • X-Town ABS 16
KYMCO 400: X-Citing i ABS 14-15 • X-Citing i ABS E4 16-17 • X-Citing i 13-15
R.O. 00121020



121830770

SILENTBLOCK SUPPORTO MOTORE | *ENGINE MOUNT SILENTBLOCK*

KYMCO 125: Downtown i 09 • K-XCT i 12-14 • People GTI 10
KYMCO 200: Downtown i 10 • People GTI 10 • People GTI 14
KYMCO 250: B&W Euro2 03 • B&W 00 • Grand Dink Euro2 03-04 • Grand Dink 01-02
KYMCO 300: Downtown i 09 • Downtown ABS i 10-11 • Downtown i 11 • G-Dink 12 • K-XCT i ABS 14 • K-XCT i 12 • People GTI ABS 12-14 • People GTI 10-14
KYMCO 350: Downtown i ABS 15
R.O. 00169989





121830380

TAMPONE DI SCONTRO | *BUFFER*
Confezione 5 Pz. | *5 Pcs Packing*

PIAGGIO 50-125: Vespa PK XL
V5A1-V5B1-V5B2-V5SA1-V9A1-VMA2-VMB1
R.O. 078578



121830390

TAMPONE DI SCONTRO | *BUFFER*
Confezione 5 Pz. | *5 Pcs Packing*

PIAGGIO 50-90: Vespa 50-90
PIAGGIO 125: Vespa Primavera ET3 • Vespa PK
V5X1T-V5X5T-V5S1T-VMX1T-VMX5T
R.O. 165206



121830400

TAMPONE DI SCONTRO | *BUFFER*
Confezione 5 Pz. | *5 Pcs Packing*

PIAGGIO 125-150-200: Vespa PX • Vespa PE
Tutti i modelli - *All models*
R.O. 178338



121830510

TAMPONE MOTORE | *ENGINE BUFFER*
Confezione 5 Pz. | *5 Pcs Packing*

PIAGGIO 125-150: Vespa PX
VNX1T-VLX1T
R.O. 059589



121830520

TAMPONE MOTORE | *ENGINE BUFFER*
Confezione 5 Pz. | *5 Pcs Packing*

PIAGGIO 125-150: Vespa PX
VNX1T-VLX1T
R.O. 059588





121858620

COLONNINA CUFFIA | *SPACER*
Dimensioni 7 x 29 mm | *Dimensions 7 x 29 mm*
Confezione 5 Pz. | *5 Pcs Packing*

PIAGGIO 125: Vespa PX E 81-97
PIAGGIO 150: Vespa PX E 81-97
VMX - VLX
R.O. 001447



121860290

COLONNINA CUFFIA | *COOLING HOOD SPACER*
Dimensioni 8 x 33 mm | *Dimensions 8 x 33 mm*
Confezione 5 Pz. | *5 Pcs Packing*

PIAGGIO 200: Vespa PX E 81-07
VSX
R.O. 015239



SCARICO

EXHAUST SYSTEM
SISTEMA DE ESCAPE
SYSTÈME D'ÉCHAPPEMENT









Pots d'Echappement	*Escapes*	*Mufflers*	**MARMITTE - TUBI SCARICO**	**294**
Accessoires Pots d'Echappement	*Accesorios Escapes*	*Mufflers Accessories*	**ACCESSORI MARMITTE - TUBI DI SCARICO**	**296**
Collecteur d'Echappement	*Colectores de Escape*	*Exhaust Manifolds*	**COLLETTORI SCARICO**	**299**
Sondes Lambda	*Sondas Lambda*	*Oxygen Sensors*	**SONDE LAMBDA**	**300**



100751000

Resistente fino a 500°, verniciata trasparente | *500° Heat resistance, transparent painting*

PIAGGIO 50: Vespa 50 Special 75-83
V5B3-V5R1
R.O. 137655



100751010

Resistente fino a 500°, verniciata trasparente | *500° Heat resistance, transparent painting*

PIAGGIO 50: Vespa S 68-82
PIAGGIO 90: Vespa 90 78-83
PIAGGIO 125: Vespa Primavera 67-83
VMA2-V5SA1-V9B1
R.O.120218



100751020

Resistente fino a 500°, verniciata trasparente | *500° Heat resistance, transparent painting*

PIAGGIO 125: Vespa GT • Vespa GTR
PIAGGIO 150: Vespa Sprint • Vespa Sprint Veloce
VLB1T-VLB2T-VNL2T
R.O. 124046



100751030

Resistente fino a 500°, verniciata nera | *500° Heat resistance, black painting*

PIAGGIO 200: Vespa PX • Vespa PXE Arcobaleno 81-97
VSX1T
R.O. 417809



100751040

PIAGGIO 125: Vespa PX
R.O. 417806



100751090

Resistente fino a 500°, verniciata nera | *500° Heat resistance, black painting*

PIAGGIO 50: Ape P 80-85
R.O. 129246



100751110

100751120

PIAGGIO 50: Ciao 80-88
R.O. 2472605



100751150

Modello Touring | *Touring model*

PIAGGIO 125-150: Vespa PX



100751160

Modello Touring | *Touring model*

PIAGGIO 200: Vespa PE



Marmitte non omologate. Vietato l'uso su strade pubbliche | *Only for race and show. For road legal use in your country, contact local traffic authorithies*



100751170

PIAGGIO 125-150: Vespa Super
R.O. 131869



100751180

Resistente fino a 500°, verniciata nera | *500° Heat resistance, black painting*

PIAGGIO 50: Ape Europa
R.O. 830452



Marmitte non omologate. Vietato l'uso su strade pubbliche | *Only for race and show. For road legal use in your country, contact local traffic authorithies*



142680590

PROTEZIONE MARMITTA IN PLASTICA | *EXHAUST PLASTIC COVER*
Verniciato nero | *Black painted*

YAMAHA 500: XP T-Max ABS 05-06 • XP T-Max Black Max 06 • XP T-Max 01-07
R.O. 5GJ1465T0000



142680600

PROTEZIONE MARMITTA IN PLASTICA | *EXHAUST PLASTIC COVER*
Verniciato nero | *Black painted*

YAMAHA 500: XP T-Max ABS SV 10-11 • XP T-Max ABS 07-11 • XP T-Max Black Max - Night Max 07 • XP T-Max SV 11 • XP T-Max White Max 10 • XP T-Max 07-08
YAMAHA 530: XP T-Max ABS 12-16 • XP T-Max SP ABS 15-16 • XP T-Max SP 15 • XP T-Max 12-16
R.O. 5VU1465T0000



142680610

PROTEZIONE MARMITTA IN PLASTICA | *EXHAUST PLASTIC COVER*
Verniciato grigio | *Grey painted*

YAMAHA 125: YP R X-Max 14-16 • YP RA X-Max ABS 14-17
YAMAHA 250: YP R X-Max 14-16 • YP RA X-Max ABS 14-16
R.O. 2DME47180000



142680620

PROTEZIONE MARMITTA IN PLASTICA | *EXHAUST PLASTIC COVER*
Verniciato nero grezzo | *Raw black painted*

HONDA 300: SH 07-13



142680740

PROTEZIONE SUPERIORE MARMITTA NERA | *EXHAUST PLASTIC TOP COVER BLACK*

YAMAHA 530: XP T-Max SX 17-18 • XP T-Max DX 17-18 • XP T-Max 17-18
R.O. BC3147180000



142680750

PROTEZIONE INFERIORE MARMITTA NERA | *EXHAUST PLASTIC BOTTOM COVER BLACK*

YAMAHA 530: XP T-Max SX 17-18 • XP T-Max DX 17-18 • XP T-Max 17-18
R.O. BC31465T0000



142680630

FONDELLO MARMITTA IN PLASTICA | *EXHAUST END PLASTIC COVER*
Verniciato grigio | *Grey painted*

YAMAHA 500: XP T-Max ABS 05-06 • XP T-Max Black Max 06 • XP T-Max 01-07
R.O. 5GJ147990100



142680640

FONDELLO MARMITTA IN PLASTICA | *EXHAUST END PLASTIC COVER*
Verniciato grigio | *Grey painted*

YAMAHA 400: YP Majesty 04-06
YAMAHA 500: XP T-Max ABS SV 10-11 • XP T-Max ABS 07-11 • XP T-Max Black Max - Night Max 07 • XP T-Max SV 11 • XP T-Max White Max 10 • XP T-Max 07-11
R.O. 5RU14799000



142680650

FONDELLO MARMITTA IN PLASTICA | *EXHAUST END PLASTIC COVER*
Verniciato grigio | *Grey painted*

YAMAHA 125: YP R X-Max 14-16 • YP RA X-Max ABS 14-17
YAMAHA 250: YP R X-Max 14-16 • YP RA X-Max ABS 14-16
R.O. 2DME47990000





142680660

FONDELLO MARMITTA IN PLASTICA | *EXHAUST END PLASTIC COVER*
Verniciato nero grezzo | *Raw black painted*

HONDA 300: SH 07-13



142680760

FONDELLO MARMITTA IN PLASTICA | *EXHAUST END PLASTIC COVER*

YAMAHA 530: XP T-Max SX 17-18 • XP T-Max DX 17-18 • XP T-Max 17-18
R.O. BC3147990000



100720010

CARTUCCIA LANA DI ROCCIA Ø60x170 mm
Silenziatore cross | *Rock wool cartridge for cross silencers*



100720020

CARTUCCIA LANA DI ROCCIA Ø80x300 mm
Silenziatore cross | *Rock wool cartridge for cross silencers*



100720030

FOGLIO LANA DI ROCCIA 600x320x30 mm
Per marmitta scooter | *Rock wool sheet for scooter muffler*



121830130

SUPPORTO ELASTICO X MARMITTA | *RUBBER MUFFLER BRACKET*

PIAGGIO 50: Ape FL-FL2 89-95 • Ape FL3 Europa 96-99 • Ape Mix 2T 98-08 • Ape P 80-85 • Ape RST Mix 99-03 • Ape TM P 85-89 • Ape 09-15
R.O. 127350



121850250

DADO TUBO SCARICO FLANGIATO M7X1 | *SILENCER NUT M7X1*
Confezione 10 pz. | *10 Pcs Packing*

APRILIA 50-125-250-300-1000-1100
DERBI 50-125-150-200-250-300
GILERA 50-125-200-250-300
PIAGGIO 125-150-180-200-250-300
R.O. 436947



121856050

BULLONE M6x1 | *BOLT M6x1*
Confezione 10 pz. | *10 Pcs Packing*

MINARELLI - YAMAHA 50



121858900

VITE PER MARMITTA | *BOLT MUFFLER*
Confezione 10 pz. | *10 Pcs Packing*

PIAGGIO 125-150-200: Vespa PX
R.O. 014691





100751070

GHIERA SCARICO | *EXHAUST RING*

PIAGGIO 200: Vespa PX • Cosa • Vespa Rally
VSX1T-VSR1T-VSE1T
R.O. 130143



142800040

TERMINALE MARMITTA | *EXHAUST TERMINAL*

PIAGGIO: Vari modelli Vespa - *Various Vespa models*
R.O. 610157M



142800060

TUBETTO MARMITTA | *EXAUST TUBE*

PIAGGIO: Vari modelli Vespa - *Various Vespa models*





100540010

PIAGGIO 50: Vespa 50 • Vespa PK • Vespa PK XL • Vespa HP • Vespa N • Vespa Rush
PIAGGIO 125: Vespa Primavera ET3
V5A1-V5B1-V5B2-V9A1-VMA2-VMB1
R.O. 247033



100540020

PIAGGIO 125: Vespa PK • Vespa PK S
VMX1T-VMX5T
R.O. 222208





SONDE LAMBDA

OXYGEN SENSORS

Modello *Model*	CC	Da *From*	A *To*	OEM	Codice RMS *RMS Code*
APRILIA					
Atlantic Eu3 125-250	125	2006	2008	AP8127829	**100120090**
Sport City Euro3	125	2006	2008	AP8127829	**100120090**
Sr Max	125	2011	2014	639806	**100120080**
Atlantic Eu3 125-250	250	2006	2008	AP8127829	**100120090**
Scarabeo Light	250	2006	2008	AP8127829	**100120090**
Sport City Cube	250	2008	2012	584344	**100120090**
Sport City Cube	250	2008	2012	639806	**100120080**
Atlantic	300	2010	2012	639806	**100120080**
Scarabeo Light	300	2009	2010	639806	**100120080**
Sport City Street	300	2012	2012	639806	**100120080**
Sr Max	300	2011	2014	639806	**100120080**
Atlantic Sprint 400-500	400	2005	2008	AP8119860	**100120080**
Scarabeo Light 400-500	400	2006	2008	639806	**100120080**
Atlantic Sprint 400-500	500	2005	2008	AP8119860	**100120080**
Scarabeo Light 400-500	500	2006	2008	639806	**100120080**
Dorsoduro	750	2008	2016	584344	**100120090**
Mana	850	2007	2011	584344	**100120090**
Mana Gt	850	2009	2016	584344	**100120090**
Srv - Srv Abs Atc	850	2012	2014	639806	**100120080**
Dorsoduro	900	2017	2017	584344	**100120090**
Dorsoduro Euro 4 Abs	900	2018	2018	584344	**100120090**
Shiver	900	2017	2017	584344	**100120090**
Rsv R - Factory - Dream	1000	2004	2008	AP0266030	**100120180**
Rsv4 Aprc R	1000	2011	2012	584344	**100120090**
Rsv4 Aprc R Abs	1000	2013	2014	584344	**100120090**
Rsv4 Factory - Sbk Racing	1000	2009	2010	584344	**100120090**
Rsv4 Factory Aprc Abs	1000	2013	2014	584344	**100120090**
Rsv4 Factory Aprc Std - Se	1000	2011	2012	584344	**100120090**
Rsv4 R	1000	2009	2010	584344	**100120090**
Tuono R-Factory	1000	2006	2009	AP0266030	**100120180**
Tuono V4 R Aprc Abs	1000	2014	2014	584344	**100120090**
Tuono V4 R Std - Aprc	1000	2011	2013	584344	**100120090**
Tuono V4 Factory	1100	2015	2016	584344	**100120090**
Tuono V4 Rr	1100	2015	2016	584344	**100120090**
BMW					
F 650 Cs Scarver	650	2002	2005	11787685320	**100120200**
F 650 Cs Scarver Abs	650	2002	2005	11787685320	**100120200**
F 650 Gs	650	2000	2003	11787685320	**100120200**
F 650 Gs Abs	650	2000	2003	11787685320	**100120200**
F 650 Gs Dakar	650	2000	2003	11787685320	**100120200**
F 650 Gs Dakar Abs	650	2002	2003	11787685320	**100120200**
R 850 C	850	1998	2001	11781341022	**100120190**
R 850 C Abs	850	1998	2001	11781341022	**100120190**
R 850 R Roadster	850	2003	2006	11781341022	**100120190**
R 850 R Roadster Abs	850	2003	2006	11781341022	**100120190**
R 1100 S 5 Inch Rim	1100	1998	2005	11781341022	**100120190**
R 1100 S 5 Inch Rim Abs	1100	1998	2005	11781341022	**100120190**
R 1100 S 55 Inch Rim	1100	1998	2005	11781341022	**100120190**
R 1100 S 55 Inch Rim Abs	1100	1998	2005	11781341022	**100120190**
R 1150 Gs	1150	1999	2004	11781341022	**100120190**
R 1150 Gs Abs	1150	1999	2004	11781341022	**100120190**
R 1150 Gs Adventure	1150	2002	2005	11781341022	**100120190**
R 1150 Gs Adventure Abs	1150	2002	2005	11781341022	**100120190**
R 1150 R Roadster	1150	2001	2006	11781341022	**100120190**
R 1150 R Roadster Abs	1150	2001	2006	11781341022	**100120190**
R 1150 R Rockster	1150	2003	2005	11781341022	**100120190**
R 1150 R Rockster Abs	1150	2003	2005	11781341022	**100120190**
R 1150 Rs	1150	2001	2002	11781341022	**100120190**
R 1150 Rs Abs	1150	2002	2005	11781341022	**100120190**
R 1150 Rs Doppia Accensione	1150	2003	2005	11781341022	**100120190**
R 1150 Rt Abs	1150	2002	2005	11781341022	**100120190**
K 1200 Rs 5 Inch Rim Abs	1200	1997	2000	11781341022	**100120190**
K 1200 Rs 55 Inch Rim Abs	1200	1997	2000	11781341022	**100120190**
R 1200	1200	1997	2003	11781341022	**100120190**
R 1200 Abs	1200	1997	2003	11781341022	**100120190**
R 1200 C	1200	1999	2003	11781341022	**100120190**
R 1200 C Abs	1200	1999	2003	11781341022	**100120190**
R 1200 Cl	1200	2003	2005	11781341022	**100120190**
R 1200 Cl Abs	1200	2003	2005	11781341022	**100120190**
R 1200 High Bar	1200	1997	2002	11781341022	**100120190**
R 1200 Hochlenker Abs	1200	1997	2002	11781341022	**100120190**
DERBI					
Rambla 125-250	125	2008	2009	584344	**100120090**
Rambla 125-250 E3 2Ver	125	2008	2008	584344	**100120090**
Gp1 Low Seat 250 Eu3	250	2007	2008	584344	**100120090**
Rambla 125-250	250	2008	2009	584344	**100120090**
Rambla 125-250 E3 2Ver	250	2008	2008	584344	**100120090**
Rambla	300	2010	2011	639806	**100120080**
DUCATI					
Monster 695	695	2007	2008	55211111A	**100120210**
Monster S2R 800	800	2007	2007	55211111A	**100120210**
Streetfighter 848	848	2013	2015	55211111A	**100120210**
Superbike 848 Evo	848	2013	2013	55211111A	**100120210**
Superbike 848 Evo Corse Se	848	2013	2013	55211111A	**100120210**
Streetfighter 848	850	2012	2012	55211111A	**100120210**
Superbike 848	850	2008	2010	55211111A	**100120210**
Superbike 848 Evo	850	2011	2012	55211111A	**100120210**
Superbike 848 Evo Corse Se	850	2012	2012	55211111A	**100120210**
Superbike 848 Hayden	850	2010	2010	55211111A	**100120210**
Desmosedici Rr	1000	2008	2008	55211111A	**100120210**
Monster S2R 1000	1000	2006	2008	55211111A	**100120210**
Monster S4R	1000	2007	2008	55211111A	**100120210**
Monster S4Rs	1000	2006	2008	55211111A	**100120210**
Monster S4Rs Tricolore	1000	2008	2008	55211111A	**100120210**
Sport Touring St3	1000	2006	2007	55211111A	**100120210**
Sport Touring St3 S Abs	1000	2006	2007	55211111A	**100120210**
Sportclassic Gt1000	1000	2007	2010	55211111A	**100120210**
Sportclassic Gt1000 Touring	1000	2009	2009	55211111A	**100120210**
Sportclassic Paul Smart	1000	2006	2006	55211111A	**100120210**
Sportclassic Sport 1000	1000	2007	2008	55211111A	**100120210**
Sportclassic Sport 1000 S	1000	2007	2009	55211111A	**100120210**
Sportclassic Sport 1000 Single-Se	1000	2006	2007	55211111A	**100120210**
Streetfighter S	1098	2013	2013	55211111A	**100120210**
Hypermotard 1100	1100	2008	2009	55211111A	**100120210**
Hypermotard 1100 S	1100	2008	2009	55211111A	**100120210**
Multistrada 1100	1100	2007	2009	55211111A	**100120210**
Multistrada 1100 S	1100	2007	2009	55211111A	**100120210**
Streetfighter	1100	2010	2011	55211111A	**100120210**
Streetfighter S	1100	2010	2012	55211111A	**100120210**
Superbike 1098	1100	2007	2008	55211111A	**100120210**
Superbike 1098 S	1100	2007	2008	55211111A	**100120210**
Superbike 1098 S Tricolore	1100	2007	2008	55211111A	**100120210**
Superbike 1098 R	1200	2008	2009	55211111A	**100120210**
Superbike 1098 R Bayliss	1200	2009	2009	55211111A	**100120210**
Superbike 1198	1200	2009	2011	55211111A	**100120210**
Superbike 1198 R	1200	2010	2010	55211111A	**100120210**



Modello *Model*	CC	Da *From*	A *To*	OEM	Codice RMS *RMS Code*
Superbike 1198 S	1200	2009	2010	55211111A	**100120210**
Superbike 1198 S Corse	1200	2010	2010	55211111A	**100120210**
Superbike 1198 Sp	1200	2011	2011	55211111A	**100120210**
GILERA					
Nexus Euro3 Ie	125	2008	2010	639806	**100120080**
Nexus Euro3	250	2006	2007	584344	**100120090**
Nexus Sp Euro3	250	2006	2007	584344	**100120090**
Nexus Euro3	300	2008	2011	639806	**100120080**
Fuoco 4T-4V Ie E3 Lt	500	2013	2014	639806	**100120080**
Fuoco Euro3	500	2007	2013	639806	**100120080**
Nexus Euro3	500	2006	2011	639806	**100120080**
Nexus Sp Euro3	500	2006	2007	639806	**100120080**
Gp	800	2007	2011	584344	**100120090**
Gp Centenario	800	2009	2009	584344	**100120090**
HARLEY DAVIDSON					
Xl 883 C Sportster Custom	883	2007	2010	-	**100120220**
Xl 883 L Sportster Super Low	883	2011	2014	-	**100120220**
Xl 883 L Sportster Super Low Abs	883	2015	2016	-	**100120220**
Xl 883 N Sportster Iron	883	2009	2014	-	**100120220**
Xl 883 R Sportster Roadster	883	2007	2014	-	**100120220**
Xl 883 Sportster	883	2007	2009	-	**100120220**
Xl 1200 C Sportster Custom	1200	2007	2014	-	**100120220**
Xl 1200 N Sportster Nightster	1200	2008	2012	-	**100120220**
Xl 1200 R Sportster Roadster	1200	2007	2008	-	**100120220**
Xl 1200 X Sportster Forty Eight	1200	2010	2014	-	**100120220**
Xl 1200 X Sportster Forty Eight Abs	1200	2015	2016	-	**100120220**
Xl-Anv 1200 C Sportster Custom Anniversary	1200	2013	2013	-	**100120220**
Vrscaw 1250 V-Rod Abs	1250	2009	2010	-	**100120220**
Vrscawa 1250 V-Rod Abs	1250	2008	2008	-	**100120220**
Vrscf 1250 V-Rod Muscle Abs	1250	2009	2017	-	**100120220**
Flhr 1584 Road King	1584	2007	2008	-	**100120220**
Flhr 1584 Road King Abs	1584	2008	2009	-	**100120220**
Flht 1584 Electra Glide Standard	1584	2007	2008	-	**100120220**
Flhtcutg 1584 Tri Glide Ultra Classic Trike	1584	2009	2009	-	**100120220**
Flhx 1584 Street Glide	1584	2007	2009	-	**100120220**
Flhx 1584 Street Glide Abs	1584	2008	2009	-	**100120220**
HONDA					
Fes 125 Pantheon	125	2004	2006	36531-KRJ-901	**100120260**
Fes 125 S-Wing	125	2007	2010	36531-KTF-641	**100120250**
Pes 125 Ps I	125	2006	2010	36531-KTF-641	**100120250**
Sh 125 I	125	2005	2012	36531-KTF-641	**100120250**
Fes 150 A S-Wing Abs	150	2007	2009	36531-KTF-641	**100120250**
Fes 150 Pantheon	150	2003	2005	36531-KRJ-901	**100120260**
Fes 150 S-Wing	150	2007	2009	36531-KTF-641	**100120250**
Pes 150 Ps I	150	2006	2010	36531-KTF-641	**100120250**
Sh 150 I	150	2005	2008	36531-KTF-641	**100120250**
Cb 600 F Hornet	600	2007	2011	36531-MFG-D01	**100120230**
Cbr 600 F	600	2011	2011	36531-MFG-D01	**100120230**
Cbf 1000	1000	2006	2010	36531-MFA-D01	**100120240**
Cbf 1000 A Abs	1000	2006	2010	36531-MFA-D01	**100120240**
KYMCO					
Agility Plus E4	125	2016	2016	00168213	**100120070**
Downtown 125I	125	2009	2016	00168213	**100120070**
Downtown E4	125	2016	2016	00168213	**100120070**
G-Dink	125	2012	2012	00168213	**100120070**

Modello *Model*	CC	Da *From*	A *To*	OEM	Codice RMS *RMS Code*
K-Xct I	125	2012	2014	00168213	**100120070**
People Gti	125	2010	2010	00168213	**100120070**
People Gti	125	2014	2014	00168213	**100120070**
People One E4	125	2016	2016	00168213	**100120070**
People One I	125	2013	2013	00168213	**100120070**
People One I Dd	125	2015	2015	00168213	**100120070**
X-Town Cbs	125	2016	2016	00168213	**100120070**
Agility 200I R16	200	2010	2010	00168213	**100120070**
Agility I Plus	200	2014	2014	00168213	**100120070**
Agility R16	200	2012	2012	00168213	**100120070**
Dink Euro3I	200	2006	2007	00168213	**100120070**
Downtown I	200	2010	2010	00168148	**100120070**
Like 200I	200	2009	2009	00168213	**100120070**
Like Lx	200	2012	2012	00168213	**100120070**
People Gti	200	2010	2010	00168148	**100120070**
People Gti	200	2014	2014	00168148	**100120070**
People S 200I	200	2007	2007	00168213	**100120070**
People S 250I	250	2007	2007	00168148	**100120070**
X Citing I	250	2006	2007	00168148	**100120070**
Downtown 300I	300	2009	2009	00168148	**100120070**
Downtown Abs	300	2010	2010	00168148	**100120070**
Downtown Abs I	300	2011	2016	00168148	**100120070**
Downtown I	300	2011	2011	00168148	**100120070**
G-Dink	300	2012	2012	00168148	**100120070**
K-Xct I	300	2012	2012	00168213	**100120070**
K-Xct I Abs	300	2014	2014	00168213	**100120070**
People Gti	300	2010	2011	00168148	**100120070**
People Gti	300	2014	2014	00168148	**100120070**
People Gti Abs	300	2012	2012	00168148	**100120070**
People Gti Abs	300	2014	2014	00168148	**100120070**
People Gti Abs E4	300	2016	2016	00168148	**100120070**
People S 300I	300	2008	2008	00168148	**100120070**
X Citing 300I	300	2008	2008	00168148	**100120070**
X Citing 300I R	300	2008	2009	00168148	**100120070**
X-Town Abs	300	2016	2016	00168213	**100120070**
Downtown Abs E4	350	2016	2016	00168213	**100120070**
Downtown I Abs	350	2015	2015	00168213	**100120070**
X Citing I	400	2013	2013	00168213	**100120070**
X Citing I	400	2015	2015	00168213	**100120070**
X Citing I Abs	400	2014	2015	00168213	**100120070**
X Citing I Abs E4	400	2016	2016	00168213	**100120070**
X Citing 500 R	500	2009	2009	00168148	**100120070**
X Citing 500I	500	2006	2008	00168148	**100120070**
X Citing 500I R	500	2007	2008	00168148	**100120070**
MOTO GUZZI					
Breva Std - Pubblica Amministrazione	750	2003	2009	GU32727010	**100120270**
Nevada Classic	750	2004	2008	GU32727010	**100120270**
Nevada Classic - Aquila Nera	750	2009	2010	GU32727010	**100120270**
Nevada S	750	2010	2010	GU32727010	**100120270**
V7 Cafe' Classic	750	2009	2009	GU32727010	**100120270**
V7 Classic	750	2008	2012	GU32727010	**100120270**
V7 Racer	750	2010	2011	GU32727010	**100120270**
Breva	850	2006	2007	GU32727010	**100120270**
Griso	850	2006	2007	GU32727010	**100120270**
Norge	850	2007	2007	GU32727010	**100120270**
Bellagio - Aquila Nera	940	2007	2013	GU32727010	**100120270**
Breva	1100	2005	2007	GU32727010	**100120270**
California Aluminium - Titanium	1100	2003	2004	GU32727010	**100120270**



SONDE LAMBDA

OXYGEN SENSORS

Modello *Model*	CC	Da *From*	A *To*	OEM	Codice RMS *RMS Code*
California Aquila Nera	1100	2009	2011	GU32727010	**100120270**
California Classic - Touring	1100	2006	2008	GU32727010	**100120270**
California Ev - Ev Touring	1100	2003	2005	GU32727010	**100120270**
California Stone	1100	2004	2005	GU32727010	**100120270**
California Vintage	1100	2006	2012	GU32727010	**100120270**
Griso	1100	2005	2008	GU32727010	**100120270**
V11 Cafe Sport, Ballabio, Coppa Italia	1100	2003	2005	GU32727010	**100120270**
V11 Le Mans, Naked, Sport	1100	2003	2005	GU32727010	**100120270**
Breva	1200	2007	2007	GU32727010	**100120270**
Griso 8V - 8V Special Edition	1200	2007	2013	GU32727010	**100120270**
Griso Se 8V	1200	2015	2016	GU32727010	**100120270**
Norge	1200	2006	2008	GU32727010	**100120270**
Sport	1200	2006	2007	GU32727010	**100120270**
Sport 8V	1200	2008	2013	GU32727010	**100120270**
Stelvio	1200	2008	2008	GU32727010	**100120270**
Stelvio Std - Ntx	1200	2009	2010	GU32727010	**100120270**
MOTO MORINI					
9 1/2	1200	2007	2008	M31500001400	**100120270**
Corsaro	1200	2005	2007	M31500001400	**100120270**
Corsaro Carbon	1200	2007	2007	M31500001400	**100120270**
Corsaro Veloce	1200	2007	2008	M31500001400	**100120270**
Corsaro Zz	1200	2017	2017	M31500001400	**100120270**
Granpasso	1200	2008	2009	M31500001400	**100120270**
Scrambler	1200	2009	2009	M31500001400	**100120270**
PEUGEOT					
Geopolis 125 Executive Abs	125	2007	2011	767525	**100120280**
Geopolis 125 Premium	125	2007	2012	767525	**100120280**
Geopolis 125 Premium Rs	125	2007	2012	767525	**100120280**
Geopolis 125 Urban Abs	125	2008	2012	767525	**100120280**
Satelis 125 K15 Compressor Executive Abs	125	2008	2012	767525	**100120280**
Satelis 125 K15 Compressor Executive Black Sat Abs	125	2008	2012	767525	**100120280**
Satelis 125 K15 Compressor Premium	125	2007	2012	767525	**100120280**
Satelis 125 K15 Compressor Premium Black Sat	125	2008	2012	767525	**100120280**
Satelis 125 K15 Compressor White Sat	125	2011	2012	767525	**100120280**
Satelis 125 K15 Compressor White Sat Abs	125	2011	2012	767525	**100120280**
Satelis 125 K20 Compressor Executive Abs	125	2008	2009	767525	**100120280**
Satelis 125 K20 Compressor Premium	125	2007	2009	767525	**100120280**
PIAGGIO					
Liberty 4T Iget Corporate E4	50	2018	2018	584344	**100120090**
Liberty Iget 4T 3V 25Km/H	50	2016	2016	584344	**100120090**
Liberty Iget 4T 3V Ie	50	2015	2017	584344	**100120090**
Liberty Iget 4T 3V Ie E4 Emea	50	2017	2018	584344	**100120090**
Liberty Iget 4T 3V Ie E4 Emea 25Km/H	50	2017	2018	584344	**100120090**
Vespa Primavera 4T 3V 25 Km/H E4	50	2017	2018	584344	**100120090**
Vespa Primavera 4T-3V Noabs E4	50	2017	2018	584344	**100120090**
Vespa Sprint 4T 3V 25 Km/H E4	50	2017	2018	584344	**100120090**
Vespa Sprint 4T-3V E4	50	2017	2018	584344	**100120090**
Zip 4T 25Km-H	50	2018	2018	584344	**100120090**
Zip 4T E4	50	2018	2018	584344	**100120090**
Beverly Rst 4T 4V Ie Euro3	125	2010	2015	639806	**100120080**
Fly 4T 3V Ie E3 Dt	125	2013	2015	584344	**100120090**
Liberty 4T 2V Ie Ptt - Ita	125	2012	2013	584344	**100120090**
Liberty 4T 3V Ie	125	2015	2015	584344	**100120090**
Liberty 4T Iget Corporate E4	125	2017	2018	584344	**100120090**
Liberty Iget 4T 3V Ie	125	2015	2018	584344	**100120090**
Medley 4T Ie Abs	125	2016	2018	584344	**100120090**
Mp3 Ibrido	125	2009	2010	639806	**100120080**
Mp3 Ie	125	2008	2009	639806	**100120080**
Mp3 Ie Touring	125	2011	2012	639806	**100120080**
Vespa Gts 4T Ie Super	125	2009	2016	639806	**100120080**
Vespa Gts 4T Ie Super	125	2009	2016	6411235	**100120080**
Vespa Gts Ie Abs E4 (Emea)	125	2016	2018	584344	**100120090**
Vespa Gts Ie Abs E4 Abs 4T Super	125	2018	2018	584344	**100120090**
Vespa Lx 4T Euro3 Touring	125	2010	2011	584344	**100120090**
Vespa Lx Euro 3 Ie	125	2009	2011	584344	**100120090**
Vespa Lx Primavera 4T 3V Ie	125	2013	2017	584344	**100120090**
Vespa Lxv Ie 4T	125	2010	2013	584344	**100120090**
Vespa Primavera 4T 3V E4 Iget Abs	125	2016	2018	584344	**100120090**
Vespa S 4T Ie & College	125	2009	2011	584344	**100120090**
Vespa Sprint Iget 4T 3V Abs (Emea)	125	2016	2018	584344	**100120090**
X10 4T 4V Ie Euro3	125	2012	2015	639806	**100120080**
X7 Evo Ie Euro 3	125	2009	2010	639806	**100120080**
Liberty Iget 4T 3V Ie	150	2015	2018	584344	**100120090**
Medley 4T Ie Abs	150	2016	2017	584344	**100120090**
Vespa Gts 4T E4 Abs (Emea)	150	2016	2017	584344	**100120090**
Vespa Lx Euro 3 Ie	150	2009	2011	584344	**100120090**
Vespa Lx Touring	150	2010	2012	584344	**100120090**
Vespa Primavera 4T 3V Iget Abs (Emea)	150	2016	2018	584344	**100120090**
Vespa Primavera 4T-3V	150	2013	2016	584344	**100120090**
Vespa S 4T Ie & College	150	2009	2012	584344	**100120090**
Vespa Sprint Sport 4T 3V Iget Abs	150	2016	2018	584344	**100120090**
Ape Calessino E4	200	2017	2019	584344	**100120090**
Beverly Cruiser	250	2007	2009	584344	**100120090**
Beverly Euro 3 Mic	250	2007	2007	584344	**100120090**
Beverly Ie Euro 3	250	2006	2008	584344	**100120090**
Beverly Sport	250	2006	2008	584344	**100120090**
Beverly Tourer Euro3	250	2007	2009	584344	**100120090**
Carnaby	250	2008	2009	584344	**100120090**
Carnaby	250	2008	2009	639806	**100120080**
Mp3	250	2006	2008	584344	**100120090**
Mp3 Lt	250	2008	2009	584344	**100120090**
Mp3 Mic	250	2008	2009	584344	**100120090**
Vespa Gt 60 Euro 3	250	2006	2007	584344	**100120090**
Vespa Gts	250	2005	2014	584344	**100120090**
Vespa Gts Abs	250	2005	2012	584344	**100120090**
Vespa Gtv	250	2006	2009	584344	**100120090**
Vespa Gtv 4T Navy Euro3	250	2007	2007	584344	**100120090**
X Evo	250	2007	2013	584344	**100120090**
X7 Euro 3	250	2008	2008	584344	**100120090**
X8 Euro3	250	2005	2008	584344	**100120090**
Beverly Ie Abs E4 (Emea)	300	2016	2018	584344	**100120090**
Beverly Rst 4T 4V Ie Euro3	300	2010	2016	639806	**100120080**
Beverly Tourer Euro3	300	2009	2010	639806	**100120080**
Carnaby Cruiser	300	2009	2012	639806	**100120080**
Mp3 300 Ie Lt	300	2010	2011	639806	**100120080**



Modello *Model*	CC	Da *From*	A *To*	OEM	Codice RMS *RMS Code*
Mp3 300 Ie Mic	300	2010	2011	639806	**100120080**
Mp3 300 Lt Business - Sport Abs - Enjoy	300	2014	2016	639806	**100120080**
Mp3 4T 4V Ie Erl Ibrido	300	2010	2013	639806	**100120080**
Mp3 4T 4V Ie Lt Ibrido	300	2010	2011	639806	**100120080**
Mp3 Ie E4 Lt Business - Sport Abs	300	2016	2018	584344	**100120090**
Mp3 Ie Lt- Ie Lt Sport	300	2011	2014	639806	**100120080**
Mp3 Ie Lt Touring	300	2011	2013	639806	**100120080**
Mp3 Ie Touring	300	2011	2012	639806	**100120080**
Mp3 Yourban Lt Erl	300	2011	2016	639806	**100120080**
Vespa Gts - Gts Super Ie Abs E4 (Emea)	300	2016	2018	584344	**100120090**
Vespa Gts Ie & Touring	300	2012	2016	6411235	**100120080**
Vespa Gts Ie Touring	300	2011	2012	6411235	**100120080**
Vespa Gts Super	300	2008	2016	6411235	**100120080**
Vespa Gts Super Hpe 4T/4V Ie Abs	300	2018	2018	584344	**100120090**
Vespa Gts Super Sport	300	2010	2013	6411235	**100120080**
Vespa Gtv 4T 4V Ie	300	2010	2013	6411235	**100120080**
Vespa Gtv Sei Giorni Ie E4 Abs (Emea)	300	2017	2017	584344	**100120090**
Vespa Gtv Via Montenapoleone	300	2010	2010	6411235	**100120080**
X7 Evo Ie Euro 3	300	2009	2010	639806	**100120080**
Beverly 4T 4V Ie Euro3 Sport Touring	350	2011	2014	639806	**100120080**
Beverly 4T St Ie Abs	350	2016	2018	639806	**100120080**
Mp3 Maxi Sport E4 Abs	350	2018	2018	639806	**100120080**
X10 4T 4V Ie Euro3	350	2012	2015	639806	**100120080**
Beverly Euro 3	400	2006	2007	639806	**100120080**
Beverly Tourer Euro3	400	2008	2010	639806	**100120080**
Mp3	400	2007	2008	639806	**100120080**
Mp3 Ie Lt - Mp3 Ie Lt Sport	400	2008	2010	639806	**100120080**
Mp3 Ie Lt Touring	400	2011	2011	639806	**100120080**
Mp3 Mic	400	2008	2010	639806	**100120080**
Mp3 Rl Touring	400	2011	2011	639806	**100120080**
X Evo	400	2007	2011	639806	**100120080**
X8 Euro3	400	2006	2008	639806	**100120080**
Beverly Cruiser	500	2007	2012	639806	**100120080**
Beverly Euro 3	500	2006	2008	639806	**100120080**
Mp3 Lt Business Abs	500	2014	2016	639806	**100120080**
Mp3 Lt E4 Sport - Business	500	2016	2018	639806	**100120080**
Mp3 Lt Sport - Business	500	2011	2013	639806	**100120080**
Mp3 Rl Sport - Business	500	2011	2012	639806	**100120080**
Mp3 Sport Abs	500	2014	2016	639806	**100120080**
X10 4T 4V Ie Euro3	500	2012	2014	639806	**100120080**
SUZUKI					
Gsr600K6-L0	600	2006	2010	18213-01H00-000	**100120330**
Gsx-R600K6-K7	600	2006	2007	18213-01H00-000	**100120330**
Dl650 V-Strom K7-L0	650	2007	2010	18213-27G00-000	**100120340**
Gsx-R750K6-K7	750	2006	2007	18213-01H00-000	**100120330**
TRIUMPH					
Daytona 600	600	2003	2004	T2201347	**100120290**
Speed Four 600	600	2002	2002	T2201347	**100120290**
Speed Four 600	600	2003	2003	T2201347	**100120290**
Speed Four 600	600	2004	2004	T2201347	**100120290**
Speed Four 600	600	2005	2005	T2201347	**100120290**
Daytona 955 i Doppio braccio	955	2002	2002	T2201347	**100120290**
Daytona 955 i Mono braccio	955	2002	2002	T2201347	**100120290**
Daytona 955 i Mono braccio	955	2003	2003	T2201347	**100120290**

Modello *Model*	CC	Da *From*	A *To*	OEM	Codice RMS *RMS Code*
Daytona 955 i Mono braccio	955	2004	2004	T2201347	**100120290**
Daytona 955 i Mono braccio	955	2005	2006	T2201347	**100120290**
Speed Triple 955 EFI	955	2001	2001	T2201347	**100120290**
Speed Triple 955 EFI	955	2002	2002	T2201347	**100120290**
Speed Triple 955 EFI	955	2003	2003	T2201347	**100120290**
Speed Triple 955 EFI	955	2004	2004	T2201347	**100120290**
Sprint 955 RS Doppio braccio	955	2001	2001	T2201347	**100120290**
Sprint 955 RS Doppio braccio	955	2002	2002	T2201347	**100120290**
Sprint 955 RS Einarmschwinge Last Edition	955	2004	2004	T2201347	**100120290**
Sprint 955 RS Mono braccio	955	2002	2002	T2201347	**100120290**
Sprint 955 RS Mono braccio	955	2003	2003	T2201347	**100120290**
Sprint 955 ST	955	2001	2001	T2201347	**100120290**
Sprint 955 ST	955	2002	2002	T2201347	**100120290**
Sprint 955 ST	955	2003	2003	T2201347	**100120290**
Sprint 955 ST	955	2004	2004	T2201347	**100120290**
Tiger 955 i Cast wheel	955	2005	2005	T2201347	**100120290**
Tiger 955 i Cast wheel	955	2006	2006	T2201347	**100120290**
Tiger 955 i Spoked wheel	955	2003	2003	T2201347	**100120290**
Tiger 955 i Spoked wheel	955	2004	2004	T2201347	**100120290**
Sprint 1050 ST	1050	2005	2005	T2201347	**100120290**
Sprint 1050 ST	1050	2006	2006	T2201347	**100120290**
Sprint 1050 ST	1050	2007	2007	T2201347	**100120290**
Sprint 1050 ST	1050	2007	2007	T2201347	**100120290**
Sprint 1050 ST ABS	1050	2006	2007	T2201347	**100120290**
YAMAHA					
Yp125R X-Max	125	2006	2012	1B98592A0000	**100120310**
Yp125R X-Max	125	2012	2016	1B98592A0000	**100120310**
Yp125R X-Max Abs	125	2011	2011	1B98592A0000	**100120310**
Yp125Ra X-Max Abs	125	2013	2016	1B98592A0000	**100120310**
Yw Bw'S	125	2010	2010	1B98592A0000	**100120310**
Xp T-Max	500	2007	2007	1B98592A0000	**100120310**
Xp T-Max Abs	500	2007	2007	1B98592A0000	**100120310**
Xp T-Max Black Max-Night Max	500	2007	2007	1B98592A0000	**100120310**
Mt-03	660	2007	2012	1B98592A0000	**100120310**
Xt660R	660	2007	2011	1B98592A0000	**100120310**
Xt660R	660	2014	2014	1B98592A0000	**100120310**
Xt660X	660	2007	2011	1B98592A0000	**100120310**
Xt660X	660	2014	2014	1B98592A0000	**100120310**
Xt660Z Tenere	660	2008	2015	1B98592A0000	**100120310**
Xt660Za Tenere	660	2011	2011	1B98592A0000	**100120310**
Xt660Za Tenere	660	2015	2015	1B98592A0000	**100120310**



SONDE LAMBDA

OXYGEN SENSORS

100120070

KYMCO: R.O. 00168213 - 00168148



100120080

APRILIA: R.O. AP8119860
DERBI: R.O. 639806
GILERA: R.O. 639806
PIAGGIO: R.O. 639806



100120090

APRILIA: R.O. AP8127829
DERBI: R.O. 584344
GILERA: R.O. 584344
PIAGGIO: R.O. 584344



100120180 NEW

APRILIA: R.O. AP0266030



100120190 NEW

BMW: R.O. 11781341022



100120200 NEW

BMW: R.O. 11787685320





100120210 NEW

DUCATI: R.O. 55211111A



100120220 NEW

HARLEY DAVIDSON



100120230 NEW

HONDA: R.O. 36531-MFG-D01



100120240 NEW

HONDA: R.O. 36531-MFA-D01



100120250 NEW

HONDA: R.O. 36531-KTF-641



100120260 NEW

HONDA: R.O. 36531-KRJ-901





SONDE LAMBDA

OXYGEN SENSORS

100120270 NEW

MOTO GUZZI: R.O. GU32727010
MOTO MORINI: R.O. M31500001400



100120280 NEW

PEUGEOT: R.O. 767525



100120290 NEW

TRIUMPH: R.O. T2201347



100120310 NEW

YAMAHA: R.O.1B98592A0000



100120330 NEW

SUZUKI: R.O. 18213-01H00-000



100120340 NEW

SUZUKI: R.O. 18213-27G00-000



IMPIANTO FRENANTE

BRAKING SYSTEM
SISTEMA DE FRENADOS
SYSTÈME DE FREINAGE

Application pour Plaquettes et Machoires de Frein	*Apl. para Pastillas y Zapatas de Freno*	*Brake Pads and Brake Shoes Applications*	**APPLICAZIONI PASTIGLIE E GANASCE FRENO**	**308**
Plaquettes de Frein	*Pastillas de Freno*	*Brake Pads*	**PASTIGLIE FRENO**	**425**
Machoires de Freins	*Zapatas Freno*	*Brake Shoes*	**GANASCE FRENO**	**486**
Accessoires Machoires de Freins	*Accesorios Zapatas de Freno*	*Brake Shoes Accessories*	**ACCESSORI GANASCE FRENO**	**491**
Disques de Frein	*Discos de Freno*	*Brake Discs*	**DISCHI FRENO**	**492**
Frein à Tambour	*Tambores de Freno*	*Brake Drums*	**TAMBURI FRENO**	**522**
Accessoires Frein à Tambour	*Accesorios Tambores de Freno*	*Brake Drums Accessories*	**ACCESSORI TAMBURO**	**523**
Cylindres de Frein	*Cilindros Frenos*	*Brake Cylinders*	**CILINDRETTI FRENO**	**524**
Pompes Freins	*Bombas Freno*	*Brake Master Cylinders*	**POMPE FRENO**	**527**
Accessoires Système de Freinage	*Accesorios Sistema de Frenos*	*Braking System Accessories*	**ACCESSORI IMPIANTO FRENANTE**	**528**

Modello *Model*	**CC**	**Da** *From*	**A** *To*	RMS YOUR BEST PARTNER **Anteriore Organica** *Front Organic*	SINTER **Anteriore Sinterizzata** *Front Sintered*	RMS YOUR BEST PARTNER **Posteriore Organica** *Rear Organic*	SINTER **Posteriore Sinterizzata** *Rear Sintered*	**Note** *Notes*
ADLY								
Silver Fox	25	2000	2005	**225100180**	-	-	-	
Cat	50	2001	2001	**225100180**	-	-	-	
Cosy	50	2001	2001	**225100180**	-	-	-	
Fox	50	2000	2000	**225100180**	-	-	-	
Fox Plus	50	2001	2001	**225100180**	-	-	-	
Jet	50	1996	1996	**225100180**	-	-	-	
Panther	50	2001	2001	**225102800**	-	-	-	
Pista, Pista Twin Light	50	1996	1996	**225100180**	-	-	-	
RS Super Sonic	50	2006	2006	**225102800**	-	**225102800**	-	
RT Road Tracer	50	2002	2002	**225100180**	-	-	-	
Silver Fox	50	2000	2005	**225100180**	-	-	-	
Silver Fox	50	2006	2006	**225102800**	-	-	-	
Super Sonic	50	2000	2005	**225102800**	-	-	-	
Thunderbike	50	1997	1997	**225102800**	-	-	-	
Fox Plus	70	2001	2001	**225100180**	-	-	-	
Pista, Pista Twin Light	70	2001	2001	**225100180**	-	-	-	
Cosy	80	2001	2001	**225100180**	-	-	-	
RT Road Tracer	90	2002	2002	**225100180**	-	-	-	
Cat	100	2001	2001	**225100180**	-	-	-	
Jet	100	1996	1996	**225100180**	-	-	-	
Panther	100	2001	2001	**225102800**	-	-	-	
RT Road Tracer	100	2002	2002	**225100180**	-	-	-	
Silver Fox	100	2001	2005	**225100180**	-	-	-	
Silver Fox	100	2006	2006	**225102800**	-	-	-	
Super Sonic	100	2001	2005	**225102800**	-	-	-	
Thunderbike	100	2001	2001	**225102800**	-	**225102800**	-	
Cat	125	2001	2001	**225100180**	-	-	-	
Super Sonic	125	2001	2005	**225102800**	-	-	-	
Thunderbike	125	2001	2001	**225102800**	-	**225102800**	-	
ATV	150	2005	2005	**225100040**	-	**225100040**	-	
Interceptor	150	2005	2005	**225100040**	-	**225100040**	-	
ATV	300	2005	2005	**225100040**	-	**225100040**	-	
ATV Sport	300	2007	2007	**225103070**	**225103073**	-	-	
Cross X Over	300	2007	2007	**225103070**	**225103073**	-	-	
Cross X Road	300	2007	2007	**225103070**	**225103073**	-	-	
S	320	2007	2007	**225103070**	**225103073**	-	-	
U	320	2007	2007	**225103070**	**225103073**	-	-	
AEON								
Aero	50	2006	2006	**225100040**	-	-	-	
Regal	50	2006	2006	**225100040**	-	-	-	
Torch	50	2006	2006	**225100040**	-	-	-	
Regal	90	2006	2006	**225100040**	-	-	-	
Pulsar	100	2006	2006	**225100040**	-	-	-	
Revo 2	100	2004	2004	-	-	**225100040**	-	
Aero	110	2006	2006	**225100040**	-	-	-	
Pulsar	110	2006	2006	**225100040**	-	-	-	
Co-In	125	2014	2014	**225100040**	-	-	-	
Elite	125	2013	2013	**225100580**	**225100583**	**225100040**	-	
Overland	125	2002	2002	-	-	**225101070**	**225101073**	
Oz	125	2014	2014	**225100350**	**225100353**	-	-	
Pulsar	125	2006	2006	**225100040**	-	-	-	
Urban	125	2011	2013	**225100580**	**225100583**	**225100040**	-	
Urban	125	2014	2014	**225100350**	**225100353**	-	-	

Modello *Model*	**CC**	**Da** *From*	**A** *To*	RMS YOUR BEST PARTNER **Anteriore Organica** *Front Organic*	SINTER **Anteriore Sinterizzata** *Front Sintered*	RMS YOUR BEST PARTNER **Posteriore Organica** *Rear Organic*	SINTER **Posteriore Sinterizzata** *Rear Sintered*	**Note** *Notes*
Pulsar	150	2006	2006	**225100040**	-	-	-	
Overland	180	2002	2002	-	-	**225101070**	**225101073**	
Roadster	180	2002	2002	-	-	**225101070**	**225101073**	
Elite	250	2011	2011	**225100580**	**225100583**	**225100040**	-	
Urban	350	2011	2011	**225100580**	**225100583**	**225100040**	-	
Elite	400	2013	2013	**225100580**	**225100583**	**225100040**	-	
AJP								
PR3 Enduro	125	2008	2012	**225100360**	**225100363**	**225100640**	-	
PR3 Enduro	125	2013	2013	**225103340**	**225103343**	**225103460**	**225103463**	
PR3 Enduro Pro	125	2013	2013	**225103340**	**225103343**	**225103460**	**225103463**	
PR3 Extreme	125	2013	2013	**225103340**	**225103343**	**225103460**	**225103463**	
PR3 Supermotard	125	2008	2012	**225100360**	**225100363**	**225100640**	-	
PR3 Supermoto	125	2013	2013	**225103340**	**225103343**	-	-	
PR3 Trial	125	2013	2015	-	-	**225103460**	**225103463**	
PR4 Enduro	125	2004	2004	**225102720**	-	**225100640**	-	
PR4 Enduro	125	2013	2013	**225103340**	**225103343**	**225103460**	**225103463**	
PR4 Enduro Pro	125	2013	2013	**225103340**	**225103343**	**225103460**	**225103463**	
PR4 Extreme	125	2013	2015	-	-	**225103460**	**225103463**	
PR4 Supermotard	125	2004	2004	**225102720**	-	**225100640**	-	
PR4 Supermoto	125	2013	2013	**225103340**	**225103343**	**225103460**	**225103463**	
PR4 Trail	125	2013	2013	**225103340**	**225103343**	-	-	
MX	200	2009	2009	**225100360**	**225100363**	**225100080**	**225100083**	
PR3 200 M/X Pro	200	2012	2014	-	-	**225103460**	**225103463**	
PR3 Enduro	200	2008	2012	**225100360**	**225100363**	**225100640**	-	
PR3 Enduro	200	2012	2014	-	-	**225103460**	**225103463**	
PR3 Enduro Pro	200	2012	2014	-	-	**225103460**	**225103463**	
PR3 Supermotard	200	2008	2012	**225100360**	**225100363**	**225100640**	-	
PR3 Supermoto	200	2012	2014	-	-	**225103460**	**225103463**	
PR4 Enduro	200	2004	2004	**225102720**	-	**225100640**	-	
PR4 Enduro	200	2012	2014	-	-	**225103460**	**225103463**	
PR4 Enduro Pro	200	2013	2015	-	-	**225103460**	**225103463**	
PR4 Extreme	200	2012	2014	-	-	**225103460**	**225103463**	
PR4 Supermotard	200	2004	2004	**225102720**	-	**225100640**	-	
PR4 Supermoto	200	2012	2014	-	-	**225103460**	**225103463**	
PR3 MX	240	2013	2013	**225103340**	**225103343**	**225103460**	**225103463**	
PR4 Extreme	240	2010	2015	-	-	**225103460**	**225103463**	
PR5 Enduro	250	2009	2009	**225100920**	**225100923**	**225102630**	**225102633**	
PR5 Enduro	250	2010	2010	**225103340**	**225103343**	**225103460**	**225103463**	
PR5 Extreme	250	2012	2012	**225103340**	**225103343**	**225103460**	**225103463**	
PR5 Supermotard	250	2009	2009	**225100920**	**225100923**	**225102630**	**225102633**	
PR5 Supermoto	250	2010	2010	**225103340**	**225103343**	**225103460**	**225103463**	
PR7 Adventure	650	2017	2017	**225103340**	**225103343**	**225102630**	**225102633**	
APRILIA								
AC Rally	50	1995	2002	**225100190**	**225100193**	-	-	
AF1 AE	50	1986	1986	**225100070**	-	-	-	
AF1 Europa, Futura	50	1990	1990	**225100070**	-	**225100020***	-	* = Pastiglia non omologata | ** = Not homologated brake pad*
Amico	50	1990	1991	**225120090**	-	**225120090**	-	
Amico	50	1990	1991	**225120091**	-	**225120091**	-	
Amico, Scooter	50	1992	1992	**225100190**	**225100193**	**225120051**	-	
Amico,GL,GLE	50	1993	1993	**225100190**	**225100193**	-	-	
Area 51	50	1999	1999	**225100190**	**225100193**	**225100190**	**225100193**	
Business	50	1997	1997	**225100190**	**225100193**	-	-	
Classic	50	1996	1996	**225100190**	**225100193**	-	-	

Modello *Model*	**CC**	**Da** *From*	**A** *To*	RMS YOUR BEST PARTNER **Anteriore Organica** *Front Organic*	SINTER **Anteriore Sinterizzata** *Front Sintered*	RMS YOUR BEST PARTNER **Posteriore Organica** *Rear Organic*	SINTER **Posteriore Sinterizzata** *Rear Sintered*	**Note** *Notes*
Club	50	1997	1997	**225100190**	**225100193**	-	-	
Compay	50	2009	2013	**225100190**	**225100193**	-	-	
ET	50	1985	1985	**225100010**	**225100013**	-	-	
Gulliver	50	1996	2000	**225100190**	**225100193**	-	-	
Habana/Custom	50	1999	2002	**225100190**	**225100193**	-	-	
LC Rally	50	1996	2001	**225100190**	**225100193**	**225100190**	**225100193**	
LX Amico, Sport	50	1992	1992	**225103210**	-	-	-	
McGulliver	50	2000	2000	**225100190**	**225100193**	-	-	
Mini RX	50	2004	2004	**225100650**	-	-	-	
Mojito Retro	50	1999	2003	**225100190**	**225100193**	**225120130**	-	
Mojito Retro	50	1999	2003	**225100190**	**225100193**	**225120131**	-	
Mojito, Mojito Custom	50	1999	2003	**225100190**	**225100193**	**225120130**	-	
Mojito, Mojito Custom	50	1999	2003	**225100190**	**225100193**	**225120131**	-	
Mojito, Mojito Custom	50	2004	2012	**225100190**	**225100193**	-	-	
MX	50	2003	2003	**225100360**	**225100363**	-	-	
Rally	50	1995	1995	**225100190**	**225100193**	-	-	
Red Rose	50	1988	1989	**225100030**	-	-	-	
Red Rose	50	1990	1990	**225100070**	-	-	-	
Red Rose Classic	50	1992	1992	**225100070**	-	-	-	
RS	50	1993	1995	**225100010**	**225100013**	**225100010**	**225100013**	
RS	50	1996	1999	**225100010**	**225100013**	**225100020***	-	* = Pastiglia non omologata | * = *Not homologated brake pad*
RS	50	2006	2006	**225100490**	**225100493**	**225100080**	**225100083**	
RS Replica	50	2000	2005	**225100360**	**225100363**	**225100020***	-	* = Pastiglia non omologata | * = *Not homologated brake pad*
RS-4	50	2012	2012	**225103160**	**225103163**	**225100040**	-	
RS-4 Replica	50	2016	2016	**225103160**	**225103163**	**225100040**	-	
RX	50	1990	1990	**225100360**	**225100363**	**225100020***	-	* = Pastiglia non omologata | * = *Not homologated brake pad*
RX	50	2006	2006	**225100740**	-	**225100080**	**225100083**	
RX Racing	50	2004	2006	**225100360**	**225100363**	-	-	
Scarabeo 4T	50	2004	2004	**225100460**	-	-	-	
Scarabeo Ditech	50	2002	2002	**225100190**	**225100193**	**225100310**	**225100313**	
Scarabeo Street	50	2000	2000	**225100190**	**225100193**	-	-	
Scarabeo, 2nd series	50	1994	1999	**225100190**	**225100193**	-	-	
Sonic, GP	50	1999	1999	**225100190**	**225100193**	-	-	
Sport City One	50	2008	2008	**225102620**	**225102623**	-	-	
SR Ditech	50	2001	2006	**225100190**	**225100193**	**225100310**	**225100313**	
SR Europa	50	1993	1993	**225103210**	-	-	-	
SR Racing	50	2000	2000	**225100190**	**225100193**	**225100310**	**225100313**	
SR Replica	50	1994	1994	**225100160**	-	-	-	
SR Replica (Liquid Cooled)	50	1996	1996	**225100190**	**225100193**	-	-	
SR Stealth, Racing	50	1997	1997	**225100190**	**225100193**	**225100190**	**225100193**	
SR Street	50	2005	2012	**225100190**	**225100193**	**225100310**	**225100313**	
SR Urban Kid	50	1993	1993	**225103210**	-	-	-	
SR Viper	50	1993	1993	**225103210**	-	-	-	
SR WWW, Netscaper	50	1997	1997	**225102020**	-	-	-	
SX	50	2006	2013	**225100740**	-	-	-	
SX Ltd.	50	2014	2014	**225101420**	**225101423**	**225100040**	-	
Tuareg	50	1985	1985	**225100010**	**225100013**	-	-	
Tuareg	50	1986	1986	**225100070**	-	-	-	
Tuareg Rally	50	1990	1990	**225100070**	-	-	-	
Tuono	50	2004	2004	**225100360**	**225100363**	**225100010**	**225100013**	
Younger	50	1997	1997	**225100190**	**225100193**	-	-	
Scarabeo	100	2000	2000	**225100460**	-	-	-	

Modello *Model*	**CC**	**Da** *From*	**A** *To*	RMS YOUR BEST PARTNER **Anteriore Organica** *Front Organic*	SINTER **Anteriore Sinterizzata** *Front Sintered*	RMS YOUR BEST PARTNER **Posteriore Organica** *Rear Organic*	SINTER **Posteriore Sinterizzata** *Rear Sintered*	**Note** *Notes*
Scarabeo 4T	100	2003	2003	**225100460**	-	-	-	
Scarabeo Net	100	2010	2010	**225100460**	-	-	-	
AF1	125	1987	1987	-	-	**225100010**	**225100013**	
AF1 Europa, Futura	125	1990	1992	**225100530**	**225100533**	**225100010**	**225100013**	
AF1 Replica, Sintesi	125	1989	1991	**225100530**	**225100533**	**225100010**	**225100013**	
Atlantic	125	2003	2003	**225102670**	**225102673**	**225100310**	**225100313**	
Classic	125	1996	1996	**225100740**	-	**225100010**	**225100013**	
ETX	125	1986	1986	**225100060**	**225100063**	-	-	
ETX	125	1999	1999	**225100360**	**225100363**	-	-	
ETX Tuareg	125	1986	1987	**225100060**	**225100063**	**225100010**	**225100013**	
Habana/Custom	125	2000	2002	**225100460**	-	**225120421**	-	
Leonardo	125	1996	1996	**225100190**	**225100193**	-	-	
Leonardo	125	1997	1998	**225102020**	-	**225100190**	**225100193**	
Leonardo	125	1999	1999	**225100060**	**225100063**	**225100460**	-	Impianto Grimeca | *Grimeca Caliper*
Leonardo	125	1999	1999	**225100460**	-	**225100460**	-	
Mojito, Mojito Custom	125	2002	2012	**225100460**	-	**225120421**	-	
MX	125	2004	2007	**225100430**	-	**225101200**	-	
MX Cross	125	1985	1985	**225100060**	**225100063**	-	-	
MX Supermoto	125	2007	2007	**225100430**	-	**225101200**	-	
Pegaso	125	1990	1991	**225100740**	-	-	-	
Pegaso	125	1992	1999	**225100360**	**225100363**	**225101200**	-	
Red Rose	125	1989	1989	**225100060**	**225100063**	**225100010**	**225100013**	
Red Rose	125	1990	1990	**225100740**	-	**225100010**	**225100013**	
RS	125	1999	2005	**225100530**	**225100533**	**225100010**	**225100013**	
RS	125	2006	2006	**225102830**	**225102833**	**225100310**	**225100313**	
RS Extrema	125	1993	1998	**225100530**	**225100533**	**225100010**	**225100013**	
RS Pista	125	2005	2005	**225100530**	**225100533**	**225100010**	**225100013**	
RS-4	125	2011	2011	**225100520**	**225100523**	**225100040**	-	Impianto Juan | *Juan Caliper*
RS-4	125	2011	2011	**225103160**	**225103163**	-	-	Impianto AJP | *AJP Caliper*
RS-4 Replica, ABS	125	2016	2016	**225103160**	**225103163**	**225100040**	-	
RX	125	1990	1990	-	-	**225101200**	-	
RX	125	1992	1992	**225100360**	**225100363**	**225101200**	-	
RX	125	1997	1997	**225100430**	-	-	-	
RX Enduro	125	2008	2008	**225100430**	-	**225100040**	-	
RX Supermotard	125	2008	2008	**225100430**	-	**225100040**	-	
Scarabeo, Scarabeo GT	125	1999	2003	**225100060**	**225100063**	**225100310**	**225100313**	
Scarabeo, Scarabeo GT	125	2004	2004	**225102670**	**225102673**	**225100310**	**225100313**	
Sport Pro.	125	1992	1992	**225100530**	**225100533**	**225100010**	**225100013**	
Sportcity	125	2004	2012	**225100060**	**225100063**	**225100310**	**225100313**	
SR	125	1999	2003	**225100460**	-	**225120421**	-	
SR Max	125	2012	2012	**225102620**	**225102623**	**225102620**	**225102623**	
SR Sport City One	125	2012	2012	**225102620**	**225102623**	-	-	
SX	125	2008	2013	**225100430**	-	**225101200**	-	
Tuareg	125	1986	1986	**225100060**	**225100063**	-	-	
Tuareg	125	1987	1987	-	-	**225100010**	**225100013**	
Tuareg AS	125	-	-	-	-	**225100010**	**225100013**	
Tuareg Rally	125	1986	1986	**225100060**	**225100063**	-	-	
Tuareg Rally	125	1989	1989	**225100060**	**225100063**	**225100010**	**225100013**	
Tuareg Rally	125	1990	1990	-	-	**225100010**	**225100013**	
Tuareg Rally	125	1992	1992	**225100740**	-	**225101200**	-	
Tuareg Wind	125	1988	1988	**225100070**	-	-	-	
Tuareg Wind	125	1990	1990	**225100740**	-	-	-	
Tuono	125	2004	2007	**225100530**	**225100533**	**225100010**	**225100013**	
Tuono ABS	125	2017	2017	**225103160**	**225103163**	**225100040**	-	

Modello *Model*	**CC**	**Da** *From*	**A** *To*	RMS YOUR BEST PARTNER **Anteriore Organica** *Front Organic*	SINTER **Anteriore Sinterizzata** *Front Sintered*	RMS YOUR BEST PARTNER **Posteriore Organica** *Rear Organic*	SINTER **Posteriore Sinterizzata** *Rear Sintered*	**Note** *Notes*
Leonardo	150	1997	1998	**225102020**	-	**225100190**	**225100193**	
Leonardo	150	1999	1999	**225100060**	**225100063**	**225100460**	-	Impianto Grimeca | *Grimeca Caliper*
Leonardo	150	1999	1999	**225100460**	-	**225100460**	-	
Scarabeo	150	1999	1999	**225100060**	**225100063**	**225100310**	**225100313**	
Scarabeo, Scarabeo GT	150	2004	2004	**225102670**	**225102673**	**225100310**	**225100313**	
SR	150	2000	2003	**225100460**	-	**225120421**	-	
Atlantic	200	2003	2003	**225102670**	**225102673**	**225100310**	**225100313**	
Climber	200	1993	1993	**225100010**	**225100013**	**225100010**	**225100013**	
Scarabeo	200	2007	2007	**225102670**	**225102673**	**225100310**	**225100313**	
Scarabeo Class	200	2010	2010	**225102670**	**225102673**	**225100310**	**225100313**	
Scarabeo ie	200	2012	2012	**225102670**	**225102673**	**225100310**	**225100313**	
Scarabeo, Scarabeo GT	200	2002	2003	**225100060**	**225100063**	**225100310**	**225100313**	
Sportcity	200	2004	2008	**225100060**	**225100063**	**225100310**	**225100313**	
Climber	240	1989	1990	**225100070**	-	-	-	
TX	240	1986	1986	**225100080**	**225100083**	-	-	
AF1 Replica	250	1990	1990	**225100530**	**225100533**	**225103150**	**225103153**	
Atlantic ie	250	2007	2007	**225102670**	**225102673**	**225100310**	**225100313**	
Leonardo	250	1999	1999	**225100060**	**225100063**	**225100310**	**225100313**	Impianto Grimeca | *Grimeca Caliper*
Leonardo	250	1999	1999	**225100460**	-	**225100310**	**225100313**	
MX Cross	250	1985	1985	**225100010**	**225100013**	-	-	
RS	250	1995	1996	**225100520**	**225100523**	**225100010**	**225100013**	
RS	250	1997	2002	**225101100**	**225101103**	**225100010**	**225100013**	
RS Pista	250	2004	2004	**225101100**	**225101103**	**225100010**	**225100013**	
RX	250	1986	1986	**225100010**	**225100013**	-	-	
Scarabeo, Scarabeo ie	250	2006	2006	**225102670**	**225102673**	**225100310**	**225100313**	
Sportcity ie	250	2006	2008	**225100060**	**225100063**	**225100310**	**225100313**	
Tuareg Rally	250	1986	1986	**225100060**	**225100063**	**225100010**	**225100013**	
Climber	275	1989	1990	**225100070**	-	-	-	
R, Climber	280	1992	1992	**225100080**	**225100083**	**225100080**	**225100083**	
Leonardo	300	2005	2005	**225100060**	**225100063**	**225100460**	-	Impianto Grimeca | *Grimeca Caliper*
Scarabeo Special	300	2010	2010	**225102670**	**225102673**	**225100310**	**225100313**	
SR Max	300	2012	2012	**225102620**	**225102623**	**225102620**	**225102623**	
TX	311	1986	1986	**225100080**	**225100083**	-	-	
TX M	312	1988	1988	**225100080**	**225100083**	**225100080**	**225100083**	
TXR M	312	1988	1988	**225100080**	**225100083**	**225100080**	**225100083**	
ETX	350	1986	1986	**225100060**	**225100063**	**225100010**	**225100013**	
ETX	350	1986	1992	-	-	**225100010**	**225100013**	
Tuareg	350	1986	1986	**225100060**	**225100063**	**225100010**	**225100013**	
Tuareg	350	1988	1989	-	-	**225100010**	**225100013**	
Tuareg Wind	350	1987	1987	**225100060**	**225100063**	**225100010**	**225100013**	
Tuareg Wind	350	1988	1988	-	-	**225100010**	**225100013**	
Tuareg Wind	350	1990	1990	-	-	**225101200**	-	
Scarabeo ie	400	2007	2007	**225100060**	**225100063**	**225100310**	**225100313**	
MXV	450	2009	2009	**225100920**	**225100923**	**225101450**	**225101453**	
RXV	450	2006	2006	**225100920**	**225100923**	**225101450**	**225101453**	
SXV	450	2006	2006	-	-	**225101450**	**225101453**	
SXV Van den Bosch Rep.	450	2008	2008	-	-	**225101450**	**225101453**	
Atlantic	500	2002	2005	**225100060**	**225100063**	**225100310**	**225100313**	Pinza sinistra | *Left Caliper*
Atlantic	500	2002	2005	**225100680**	-	**225100310**	**225100313**	Pinza destra | *Right Caliper*
Atlantic Sprint	500	2006	2006	**225102670**	**225102673**	**225100310**	**225100313**	
Scarabeo	500	2003	2006	**225100060**	**225100063**	**225100310**	**225100313**	
Scarabeo Class	500	2010	2010	**225100060**	**225100063**	**225100310**	**225100313**	
Scarabeo ie	500	2007	2007	**225100060**	**225100063**	**225100310**	**225100313**	
RXV	550	2006	2006	**225100920**	**225100923**	**225101450**	**225101453**	

Modello *Model*	**CC**	**Da** *From*	**A** *To*	RMS YOUR BEST PARTNER **Anteriore Organica** *Front Organic*	SINTER **Anteriore Sinterizzata** *Front Sintered*	RMS YOUR BEST PARTNER **Posteriore Organica** *Rear Organic*	SINTER **Posteriore Sinterizzata** *Rear Sintered*	**Note** *Notes*
SXV	550	2006	2006	-	-	**225101450**	**225101453**	
SXV Van den Bosch Rep.	550	2008	2008	-	-	**225101450**	**225101453**	
ETX	600	1986	1992	**225100060**	**225100063**	**225100010**	**225100013**	
Pegaso	600	1990	1992	-	-	**225101200**	-	
Tuareg	600	1986	1986	**225100060**	**225100063**	**225100010**	**225100013**	
Tuareg Wind	600	1988	1988	-	-	**225100010**	**225100013**	
Moto	650	1995	1995	**225101010**	**225101013**	-	-	
Pegaso	650	1992	1994	-	-	**225101200**	-	
Pegaso	650	1995	2000	**225101010**	**225101013**	-	-	
Pegaso Factory	650	2007	2009	-	-	**225101330**	**225101333**	
Pegaso i.e.	650	2001	2004	**225101010**	**225101013**	**225101330**	**225101333**	
Pegaso Strada	650	2005	2009	**225101100**	**225101103**	**225101330**	**225101333**	
Pegaso Trail	650	2006	2008	**225101010**	**225101013**	**225101330**	**225101333**	
Starck	650	1996	1996	**225101010**	**225101013**	-	-	
Dorsoduro Factory	750	2012	2012	**225101100**	**225101103**	**225101330**	**225101333**	
SL Shiver GT, ABS	750	2009	2009	**225102830**	**225102833**	**225101330**	**225101333**	
SL Shiver, ABS	750	2007	2007	**225102830**	**225102833**	**225101330**	**225101333**	
SMV Dorsoduro	750	2008	2008	**225101100**	**225101103**	**225101330**	**225101333**	
SMV Dorsoduro	750	2009	2016	**225102830**	**225102833**	**225101330**	**225101333**	
NA Mana	850	2007	2007	**225102830**	**225102833**	**225101330**	**225101333**	
NA Mana GT, ABS	850	2009	2013	**225102830**	**225102833**	**225100060**	**225100063**	
NA Mana, ABS	850	2008	2011	**225102830**	**225102833**	**225100060**	**225100063**	
SRV	850	2012	2012	**225100430**	-	**225102620**	**225102623**	
Dorsoduro	900	2017	2017	**225102830**	**225102833**	**225101330**	**225101333**	
Shiver	900	2017	2017	**225102830**	**225102833**	**225101330**	**225101333**	
Blue Marlin	1000	2002	2002	**225101100**	**225101103**	**225100490**	**225100493**	
ETV Caponord	1000	2001	2008	**225101010**	**225101013**	**225100490**	**225100493**	
ETV Caponord Rally Raid	1000	2004	2008	**225101010**	**225101013**	**225100490**	**225100493**	
RST Futura	1000	2001	2003	**225101100**	**225101103**	**225100430**	-	
RSV Factory Pista	1000	2004	2004	**225102860**	**225102863**	**225100490**	**225100493**	Pinza radiale | *Radial Caliper*
RSV Falco SL, R	1000	2000	2004	**225101100**	**225101103**	**225100490**	**225100493**	
RSV Mille	1000	1997	2001	**225101100**	**225101103**	**225100490**	**225100493**	
RSV Mille	1000	2002	2003	**225102860**	**225102863**	**225100490**	**225100493**	
RSV Mille Nera	1000	2004	2004	**225102860**	**225102863**	**225100490**	**225100493**	Pinza radiale | *Radial Caliper*
RSV Mille R	1000	2000	2000	**225101100**	**225101103**	**225100490**	**225100493**	
RSV Mille R	1000	2001	2002	**225102860**	**225102863**	**225100490**	**225100493**	
RSV Mille R	1000	2003	2003	**225102860**	**225102863**	**225100490**	**225100493**	Pinza radiale | *Radial Caliper*
RSV Mille R	1000	2004	2004	**225102860**	**225102863**	**225100490**	**225100493**	
RSV Mille R	1000	2005	2005	**225102860**	**225102863**	**225100490**	**225100493**	Pinza radiale | *Radial Caliper*
RSV Mille R Factory	1000	2004	2004	**225102860**	**225102863**	**225100490**	**225100493**	Pinza radiale | *Radial Caliper*
RSV Mille SP	1000	2000	2000	**225101100**	**225101103**	**225100490**	**225100493**	
RSV Tuono Fighter	1000	2003	2005	**225101100**	**225101103**	**225100490**	**225100493**	
RSV Tuono R	1000	2003	2003	**225102860**	**225102863**	**225100490**	**225100493**	
RSV Tuono R Factory, ABS	1000	2006	2006	**225102860**	**225102863**	**225100490**	**225100493**	
RSV Tuono R, ABS	1000	2004	2004	**225101100**	**225101103**	**225100490**	**225100493**	Pinza radiale | *Radial Caliper*
RSV Tuono V4 R	1000	2011	2013	**225101100**	**225101103**	**225100490**	**225100493**	
RSV Tuono V4 R	1000	2014	2014	-	**225103193**	**225100490**	**225100493**	
RSV4 ABS	1000	2009	2009	-	**225102923**	**225100490**	**225100493**	
RSV4-R ABS APRC	1000	2010	2010	-	**225102923**	**225100490**	**225100493**	
RSV4-RF	1000	2015	2015	-	**225102923**	**225100490**	**225100493**	
RSV4-RR	1000	2015	2015	-	**225102923**	**225100490**	**225100493**	
RSV Tuono V4	1100	2015	2015	-	**225103193**	**225100490**	**225100493**	
RSV Tuono V4 Factory	1100	2016	2016	-	**225103193**	**225100490**	**225100493**	
RSV Tuono V4 RR	1100	2015	2015	-	**225103193**	**225100490**	**225100493**	

Modello *Model*	**CC**	**Da** *From*	**A** *To*	RMS YOUR BEST PARTNER **Anteriore Organica** *Front Organic*	SINTER **Anteriore Sinterizzata** *Front Sintered*	RMS YOUR BEST PARTNER **Posteriore Organica** *Rear Organic*	SINTER **Posteriore Sinterizzata** *Rear Sintered*	**Note** *Notes*
Caponord	1200	2013	2013	-	**225103193**	**225101330**	**225101333**	
Caponord Rally	1200	2015	2015	-	**225103193**	**225101330**	**225101333**	
Dorsoduro, ABS	1200	2011	2011	**225101100**	**225101103**	**225101330**	**225101333**	
ARCTIC CAT								
DVX	50	2006	2006	-	-	**225101070**	**225101073**	
DVX	90	2006	2006	-	-	**225101070**	**225101073**	
DVX	250	2006	2009	**225103070**	**225103073**	**225100500**	-	
DVX	300	2009	2009	**225103070**	**225103073**	**225100500**	-	
DVX	400	2004	2008	**225102850**	**225102853**	**225100500**	-	
ATALA								
AT10	25	1997	1997	**225103210**	-	-	-	
Carosello	25	1997	1997	**225100190**	**225100193**	-	-	
AT10	50	1997	1997	**225103210**	-	-	-	
Carosello	50	1997	1997	**225100190**	**225100193**	-	-	
Hacker	50	1995	1995	**225100190**	**225100193**	-	-	
Skeggia	50	1998	1998	**225103210**	-	-	-	
Hacker	125	1998	1998	**225100190**	**225100193**	-	-	
BENELLI								
491 GT, Sport	50	1998	1998	**225100190**	**225100193**	-	-	
491 Naked	50	1999	1999	**225100190**	**225100193**	-	-	
491 Racing	50	1999	1999	**225100190**	**225100193**	**225100190**	**225100193**	
491 RR, -GP	50	2000	2000	**225100190**	**225100193**	**225100190**	**225100193**	
491 ST	50	2001	2001	**225100190**	**225100193**	-	-	
491 Superbike	50	1999	1999	**225100190**	**225100193**	**225100190**	**225100193**	
BOBO 50	50	1978	-	**225120190**	-	**225120190**	-	
Chrono	50	1992	1993	**225100070**	-	-	-	
Chrono	50	1994	1994	**225100190**	**225100193**	-	-	
Devil	50	1992	1992	**225100530**	**225100533**	**225100030**	-	
EXPORT 3 V 50	50	1979	-	**225120190**	-	**225120190**	-	
G 2 50	50	1979	-	**225120190**	-	**225120190**	-	
K2 Air	50	1998	1998	**225100190**	**225100193**	**225100190**	**225100193**	
K2 LC	50	1999	1999	**225100190**	**225100193**	**225100190**	**225100193**	
K2 Namur	50	1999	1999	**225100190**	**225100193**	**225100190**	**225100193**	
KB-X Race	50	-	-	**225100180**	-	-	-	
MOTORELLA 50	50	1979	-	**225120190**	-	**225120190**	-	
Naked	50	2002	2002	**225100190**	**225100193**	**225120061**	-	
Nemo, Quadra	50	1994	1994	**225100190**	**225100193**	-	-	
Pepe	50	1999	1999	**225100190**	**225100193**	-	-	
Spring	50	1992	1992	**225100530**	**225100533**	**225100030**	-	
K2 Biposto	100	1999	1999	**225100190**	**225100193**	-	-	
LX Pepe	100	2002	2002	**225100190**	**225100193**	**225120061**	-	
Naked	100	2002	2002	**225100190**	**225100193**	-	-	
T	124	1983	1983	**225100010**	**225100013**	-	-	
2CE	125	1976	1978	**225100010**	**225100013**	-	-	
666 Born in Hell	125	1998	1998	**225101100**	**225101103**	**225100190**	**225100193**	
Adiva	125	2000	2000	**225100190**	**225100193**	**225100450**	**225100453**	
BX	125	1989	1989	**225100530**	**225100533**	**225100010**	**225100013**	
BXK	125	1988	1988	**225100010**	**225100013**	**225100080**	**225100083**	
Caffenero	125	2008	2008	**225101070**	**225101073**	**225101420**	**225101423**	Pinza destra | *Right Caliper*
Caffenero	125	2008	2008	**225101420**	**225101423**	**225101420**	**225101423**	Pinza sinistra | *Left Caliper*
Custom	125	1985	1985	**225100010**	**225100013**	-	-	
E L.C.	125	1985	1985	**225100010**	**225100013**	-	-	
Jarno	125	1989	1989	**225100530**	**225100533**	**225100010**	**225100013**	
MJ	125	2010	2010	**225101420**	**225101423**	**225101420**	**225101423**	

Modello *Model*	**CC**	**Da** *From*	**A** *To*	**Anteriore Organica** *Front Organic*	**Anteriore Sinterizzata** *Front Sintered*	**Posteriore Organica** *Rear Organic*	**Posteriore Sinterizzata** *Rear Sintered*	**Note** *Notes*
Sport	125	-	-	**225100010**	**225100013**	**-**	**-**	
T	125	1976	1976	**225100010**	**225100013**	**-**	**-**	
TNT	125	2017	2017	**225102650**	**225102653**	**-**	**-**	
TT	125	-	-	**225100010**	**225100013**	**-**	**-**	
Velvet, Velvet Touring	125	1999	1999	**225100190**	**225100193**	**225100010**	**225100013**	
Adiva	150	2000	2000	**225100190**	**225100193**	**225100450**	**225100453**	
MJ	150	2010	2010	**225101420**	**225101423**	**225101420**	**225101423**	
Velvet, Velvet Touring	150	2000	2000	**225100190**	**225100193**	**225100010**	**225100013**	
2CE	250	-	-	**225100010**	**225100013**	**-**	**-**	
Caffenero	250	2008	2008	**225101070**	**225101073**	**225102870**	**225102873**	Pinza destra | *Right Caliper*
Caffenero	250	2008	2008	**225101420**	**225101423**	**225102870**	**225102873**	Pinza sinistra | *Left Caliper*
Disc	250	1976	1976	**225100010**	**225100013**	**-**	**-**	
Velvet, Velvet Touring	250	1999	1999	**225100190**	**225100193**	**225100010**	**225100013**	
BN	302	2014	2014	**225101100**	**225101103**	**225100490**	**225100493**	
BN	302	2015	2015	**-**	**-**	**225102560**	**225102563**	
BN Tornado	302	2016	2016	**-**	**-**	**225102560**	**225102563**	
304	304	1983	1983	**225100010**	**225100013**	**-**	**-**	
4T Turismo	350	-	-	**225100010**	**225100013**	**225103150**	**225103153**	
Zenzero	350	2012	2012	**225100580**	**225100583**	**225100040**	**-**	
354	354	1978	1982	**225100010**	**225100013**	**225103150**	**225103153**	
Sport	354	1983	1983	**225100010**	**225100013**	**225100010**	**225100013**	
Velvet Dusk	400	2003	2003	**225100360**	**225100363**	**225100190**	**225100193**	
BX Cross	449	2007	2007	**225100430**	**-**	**225101330**	**225101333**	
BX Supermotard	449	2008	2008	**225102860**	**225102863**	**225101330**	**225101333**	
4	500	1976	1976	**225100010**	**225100013**	**-**	**-**	
4T	500	1976	1976	**225100010**	**225100013**	**225103150**	**225103153**	
Leoncino	500	2016	2016	**225101100**	**225101103**	**225100490**	**225100493**	
TRK	502	2016	2016	**225101100**	**225101103**	**225100490**	**225100493**	
BX Enduro	505	2008	2008	**225100430**	**-**	**225101330**	**225101333**	
BN	600	2012	2013	**225101100**	**225101103**	**225100490**	**225100493**	
BN	600	2014	2014	**225102860**	**225102863**	**225100490**	**225100493**	
BN GT	600	2014	2014	**225102860**	**225102863**	**225100490**	**225100493**	
Sport	654	1983	1983	**225100010**	**225100013**	**225100010**	**225100013**	
Sei	750	1975	1975	**225103150**	**225103153**	**-**	**-**	
Cue	756	2007	2009	**225102860**	**225102863**	**225100490**	**225100493**	
Cue	756	2010	2010	**225101100**	**225101103**	**225100490**	**225100493**	
TnT	899	2007	2007	**225101100**	**225101103**	**225100490**	**225100493**	
TnT Century Racer	899	2011	2011	**225102860**	**225102863**	**225100490**	**225100493**	
Trek	899	2007	2007	**225101100**	**225101103**	**225100490**	**225100493**	
Sei	900	1984	1984	**225103150**	**225103153**	**225103150**	**225103153**	
Tornado 3	900	2000	2006	**225101100**	**225101103**	**225100010**	**225100013**	
Tornado TRE	900	2003	2006	**225102860**	**225102863**	**225100490**	**225100493**	
Tornado TRE RS	900	2004	2006	**225102860**	**225102863**	**225100490**	**225100493**	Pinza radiale | *Radial Caliper*
TnT	1100	2004	2004	**225101100**	**225101103**	**225100010**	**225100013**	
TnT	1130	2005	2005	**225101100**	**225101103**	**225100490**	**225100493**	
TnT Cafe Racer	1130	2005	2005	**225102860**	**225102863**	**225100490**	**225100493**	
TnT Century Racer	1130	2011	2011	**225102860**	**225102863**	**225100490**	**225100493**	
TnT Officine	1130	2007	2007	**225102860**	**225102863**	**225100490**	**225100493**	
TnT R	1130	2017	2017	**-**	**225102923**	**225100490**	**225100493**	
TnT Sport	1130	2005	2005	**225102860**	**225102863**	**225100490**	**225100493**	
TnT Titanium	1130	2005	2005	**225102860**	**225102863**	**225100490**	**225100493**	
TnT Trek	1130	2006	2006	**225101100**	**225101103**	**225100490**	**225100493**	
TnT Trek Amazonas	1130	2007	2007	**225101100**	**225101103**	**225100490**	**225100493**	

Modello *Model*	**CC**	**Da** *From*	**A** *To*	RMS YOUR BEST PARTNER **Anteriore Organica** *Front Organic*	SINTER **Anteriore Sinterizzata** *Front Sintered*	RMS YOUR BEST PARTNER **Posteriore Organica** *Rear Organic*	SINTER **Posteriore Sinterizzata** *Rear Sintered*	**Note** *Notes*
BETA								
AE Four Twin	50	1988	1988	**225100030**	-	-	-	
ALP	50	1990	1990	**225100030**	-	**225100070**	-	
ALP	50	1991	1991	**225100030**	-	**225100070**	-	
ANDY 50 ruote lega	50	1978	-	**225120190**	-	**225120190**	-	
ANDY 50 ruote raggi	50	1978	-	**225120190**	-	**225120190**	-	
Ark AirCooled	50	1999	1999	**225100190**	**225100193**	-	-	
Ark K Series	50	1997	1997	**225100190**	**225100193**	**225100190**	**225100193**	
Ark LC	50	1999	1999	**225100190**	**225100193**	**225100190**	**225100193**	
B12 50	50	1973	-	**225120190**	-	**225120190**	-	
Chrono 13	50	1994	1999	**225100190**	**225100193**	-	-	
Crono 502	50	1997	1997	**225100010**	**225100013**	-	-	
Eikon	50	1999	1999	**225100080**	**225100083**	**225100080**	**225100083**	
Eikon	50	2004	2004	**225100190**	**225100193**	**225100310**	**225100313**	
KR	50	1986	1987	**225100010**	**225100013**	-	-	
KR Twin	50	1988	1988	**225100010**	**225100013**	**225100010**	**225100013**	
MIO 50	50	1979	-	**225120190**	-	**225120190**	-	
MX Enduro	50	1992	1992	**225100070**	-	-	-	
ProRace 12/10	50	2004	2004	**225100650**	-	**225100650**	-	
PULMAN 50	50	1970	-	**225120200**	-	**225120200**	-	
Quadra	50	1995	1996	**225100190**	**225100193**	-	-	
Quadra	50	1997	2000	**225100010**	**225100013**	-	-	
Rev	50	2000	2000	**225100080**	**225100083**	**225100080**	**225100083**	
RR Enduro	50	1999	1999	**225100740**	-	**225100080**	**225100083**	
RR Enduro	50	2010	2010	**225100360**	**225100363**	**225103020**	**225103023**	
RR Enduro Alu	50	2004	2007	**225100360**	**225100363**	-	-	
RR Pro Race	50	1998	1998	**225100740**	-	**225100080**	**225100083**	
RR Standard	50	1999	1999	**225100740**	-	**225100080**	**225100083**	
RR Supermotard	50	1999	2003	**225100740**	-	**225100080**	**225100083**	
RR Supermotard	50	2004	2007	**225100080**	**225100083**	**225100080**	**225100083**	
RR Supermotard	50	2008	2008	**225100360**	**225100363**	**225103020**	**225103023**	
RR Supermotard Alu	50	2004	2005	**225100360**	**225100363**	-	-	
RV	50	1988	1988	**225100030**	-	-	-	
ST	50	1997	1997	**225100080**	**225100083**	**225100080**	**225100083**	
Super Trial	50	1992	1992	**225100080**	**225100083**	-	-	
Techno	50	1996	1996	**225100080**	**225100083**	**225100080**	**225100083**	
Tempo	50	1992	1996	**225100080**	**225100083**	-	-	
Tempo	50	1997	1998	**225100010**	**225100013**	-	-	
Tempo	50	1999	1999	**225100190**	**225100193**	-	-	
Tempo (Ruota 13")	50	2000	2000	**225100190**	**225100193**	-	-	
Tempo (Ruota 16")	50	2000	2000	**225100190**	**225100193**	-	-	
VRS	50	1986	1986	**225100030**	-	-	-	
EVO	80	2009	2009	**225100640**	-	-	-	
EVO Junior	80	2010	2010	**225100080**	**225100083**	**225100080**	**225100083**	
Rev	80	2000	2007	**225100080**	**225100083**	**225100080**	**225100083**	
Rev	80	2008	2008	**225100640**	-	-	-	
ALP	125	1999	1999	**225100080**	**225100083**	**225100080**	**225100083**	
ALP 4-stroke	125	2000	2005	**225100080**	**225100083**	**225100080**	**225100083**	
ALP 4-stroke	125	2006	2006	**225100360**	**225100363**	**225103020**	**225103023**	
Eikon	125	1999	2003	**225100080**	**225100083**	**225100080**	**225100083**	
Eikon	125	2004	2004	**225100190**	**225100193**	**225100310**	**225100313**	
EVO	125	2009	2009	**225100640**	-	-	-	
Jonathan	125	1999	1999	**225100520**	**225100523**	**225101330**	**225101333**	
M4	125	2006	2006	**225100360**	**225100363**	**225103020**	**225103023**	

Modello *Model*	**CC**	**Da** *From*	**A** *To*	RMS YOUR BEST PARTNER **Anteriore Organica** *Front Organic*	SINTER **Anteriore Sinterizzata** *Front Sintered*	RMS YOUR BEST PARTNER **Posteriore Organica** *Rear Organic*	SINTER **Posteriore Sinterizzata** *Rear Sintered*	**Note** *Notes*
Rev 3	125	2000	2005	**225100640**	-	**225100640**	-	
Rev 3	125	2006	2006	**225100640**	-	-	-	
RR Enduro 4T	125	2010	2010	**225100360**	**225100363**	**225103020**	**225103023**	
RR Supermotard	125	2008	2008	**225100360**	**225100363**	**225103020**	**225103023**	
TR 32,33	125	1986	1987	**225100030**	-	-	-	
TR 34	125	1988	1988	**225100030**	-	**225100070**	-	
TR 34,35	125	1989	1990	**225100080**	**225100083**	**225100080**	**225100083**	
TRIAL	125	1997	1997	**225100080**	**225100083**	-	-	
Urban	125	2010	2010	**225100360**	**225100363**	**225103020**	**225103023**	
Eikon	150	1999	2003	**225100080**	**225100083**	**225100080**	**225100083**	
Eikon	150	2004	2004	**225100190**	**225100193**	**225100310**	**225100313**	
R	150	2010	2010	**225102590**	**225102593**	-	-	
ALP 4-stroke	200	2000	2005	**225100080**	**225100083**	**225100080**	**225100083**	
ALP 4-stroke	200	2006	2006	**225100360**	**225100363**	**225103020**	**225103023**	
EVO	200	2009	2009	**225100640**	-	-	-	
Rev 3	200	2006	2006	**225100640**	-	-	-	
Urban	200	2010	2010	**225100360**	**225100363**	**225103020**	**225103023**	
ALP	240	1992	1992	**225100080**	**225100083**	-	-	
ALP	240	1996	1996	**225100080**	**225100083**	**225100010**	**225100013**	
Super Trial	240	1992	1992	**225100080**	**225100083**	-	-	
TR 33	240	1986	1988	**225100030**	-	-	-	
4-T Rev 3	250	2007	2007	**225100640**	-	-	-	
ALP	250	1992	1992	**225100080**	**225100083**	-	-	
ALP	250	1997	1997	**225100080**	**225100083**	**225100080**	**225100083**	
CR	250	1983	1983	**225100010**	**225100013**	-	-	
Eikon	250	1999	1999	**225100080**	**225100083**	**225100080**	**225100083**	
EVO (2T/4T)	250	2009	2009	**225100640**	-	-	-	
Rev 3	250	2000	2004	**225100640**	-	**225100640**	-	
Rev 3	250	2005	2005	**225100640**	-	-	-	
RR	250	2005	2005	**225100920**	**225100923**	**225101450**	**225101453**	
Techno	250	1996	1996	**225100080**	**225100083**	**225100080**	**225100083**	
Zero	250	1991	1991	**225100080**	**225100083**	-	-	
ALP	260	1996	1996	**225100080**	**225100083**	**225100010**	**225100013**	
Synt	260	1992	1992	**225100030**	-	-	-	
TR 34	260	1986	1988	**225100030**	-	**225100070**	-	
TR 34,35,ZERO	260	1989	1992	**225100080**	**225100083**	-	-	
Zero	260	1991	1991	**225100080**	**225100083**	-	-	
Rev 3	270	2000	2004	**225100640**	-	**225100640**	-	
Rev 3	270	2005	2005	**225100640**	-	-	-	
EVO	290	2009	2009	**225100640**	-	-	-	
Crosstrainer	300	2015	2015	**225100920**	**225100923**	**225101450**	**225101453**	
EVO	300	2009	2009	**225100640**	-	-	-	
RR	300	2013	2013	**225100920**	**225100923**	**225101450**	**225101453**	
4.0 Motard	350	2004	2004	**225100520**	**225100523**	-	-	
ALP 4	350	2004	2005	**225100360**	**225100363**	-	-	
ALP 4	350	2006	2006	**225100360**	**225100363**	**225103020**	**225103023**	
Euro	350	1999	1999	**225100520**	**225100523**	**225101330**	**225101333**	
Jonathan	350	2002	2002	**225100520**	**225100523**	**225101330**	**225101333**	
M4	350	2006	2006	**225100520**	**225100523**	**225103020**	**225103023**	Impianto Brembo | *Brembo Caliper*
RR Efi	350	2015	2015	**225100920**	**225100923**	**225101450**	**225101453**	
RR Efi Racing	350	2015	2015	**225100920**	**225100923**	**225101450**	**225101453**	
RR Enduro	350	2012	2014	**225100920**	**225100923**	**225101450**	**225101453**	
RR	390	2015	2015	**225100920**	**225100923**	**225101450**	**225101453**	
RR Enduro	400	2005	2005	**225100920**	**225100923**	**225101450**	**225101453**	

Modello *Model*	**CC**	**Da** *From*	**A** *To*	RMS YOUR BEST PARTNER **Anteriore Organica** *Front Organic*	SINTER **Anteriore Sinterizzata** *Front Sintered*	RMS YOUR BEST PARTNER **Posteriore Organica** *Rear Organic*	SINTER **Posteriore Sinterizzata** *Rear Sintered*	**Note** *Notes*
RR	430	2015	2015	**225100920**	**225100923**	**225101450**	**225101453**	
RR Racing	430	2015	2015	**225100920**	**225100923**	**225101450**	**225101453**	
RR Cross Country	450	2012	2012	**225100920**	**225100923**	**225101450**	**225101453**	
RR Enduro	450	2005	2005	**225100920**	**225100923**	**225101450**	**225101453**	
RR	480	2015	2015	**225100920**	**225100923**	**225101450**	**225101453**	
RR Racing	480	2015	2015	**225100920**	**225100923**	**225101450**	**225101453**	
RR Enduro	498	2012	2012	**225100920**	**225100923**	**225101450**	**225101453**	
GS, RV	500	1984	1984	**225100010**	**225100013**	-	-	
RR Enduro	525	2005	2005	**225100920**	**225100923**	**225101450**	**225101453**	
BIMOTA								
BBX Enduro	300	2012	2012	**225100920**	**225100923**	**225101450**	**225101453**	
YB7	400	1989	1989	**225100520**	**225100523**	**225100010**	**225100013**	
Vdue	500	1997	2000	**225100520**	**225100523**	**225100010**	**225100013**	
BBX Enduro	508	2012	2012	**225100920**	**225100923**	**225102630**	**225102633**	
Bellaria	600	1991	1991	**225100520**	**225100523**	**225100010**	**225100013**	
YB9 SRI	600	1997	1997	**225100520**	**225100523**	**225100010**	**225100013**	
BB1 Supermono	650	1997	2000	**225100520**	**225100523**	**225100010**	**225100013**	
SB7	750	1996	1996	**225100520**	**225100523**	**225100010**	**225100013**	
YB4	750	1989	1989	**225100520**	**225100523**	**225100010**	**225100013**	
3D Tesi	800	2016	2016	-	**225102923**	**225100490**	**225100493**	
1D Tesi	851	1991	1991	**225100520**	**225100523**	**225100010**	**225100013**	
DB2	900	1992	2000	**225100520**	**225100523**	**225100010**	**225100013**	
DB3 Mantra	900	1997	2000	**225100520**	**225100523**	**225100010**	**225100013**	
DB4	900	1999	2000	**225101100**	**225101103**	**225100010**	**225100013**	
1D Tesi	906	1991	1991	**225100520**	**225100523**	**225100010**	**225100013**	
2D Tesi	1000	2004	2006	**225100520**	**225100523**	**225100010**	**225100013**	
BB3	1000	2014	2014	-	**225102923**	**225100490**	**225100493**	
DB5 Mille	1000	2005	2011	**225102860**	**225102863**	**225100490**	**225100493**	Pinza radiale | *Radial Caliper*
DB5 S	1000	2007	2011	**225102860**	**225102863**	**225100490**	**225100493**	Pinza radiale | *Radial Caliper*
DB6 Delirio	1000	2007	2007	**225102860**	**225102863**	**225100490**	**225100493**	Pinza radiale | *Radial Caliper*
SB8 R	1000	1998	2000	**225101100**	**225101103**	**225100010**	**225100013**	
SB8K	1000	2006	2006	**225101100**	**225101103**	**225100010**	**225100013**	
SB8K Santamonica	1000	2007	2007	**225102860**	**225102863**	**225100010**	**225100013**	
YB11	1000	1997	1997	**225100520**	**225100523**	**225100010**	**225100013**	
YB6	1000	1989	1989	**225100520**	**225100523**	**225100010**	**225100013**	
YB8	1000	1990	1990	**225100520**	**225100523**	**225100010**	**225100013**	
Dieci	1002	1991	1991	**225100520**	**225100523**	**225100010**	**225100013**	
DB10 Bimotard	1078	2012	2012	**225102860**	**225102863**	**225100490**	**225100493**	
DB5 RE	1078	2012	2012	**225102860**	**225102863**	**225100490**	**225100493**	
DB7	1098	2008	2008	**225102860**	**225102863**	**225100490**	**225100493**	Pinza radiale | *Radial Caliper*
DB7	1099	2009	2009	-	**225102923**	**225100010**	**225100013**	Pinza radiale | *Radial Caliper*
3D Tesi	1100	2007	2007	**225102860**	**225102863**	**225100490**	**225100493**	Pinza radiale | *Radial Caliper*
DB6R Delirio	1100	2008	2008	**225102860**	**225102863**	**225100490**	**225100493**	Pinza radiale | *Radial Caliper*
DBX	1100	2013	2013	**225101010**	**225101013**	**225100430**	-	
SB6	1100	1997	2000	**225100520**	**225100523**	**225100010**	**225100013**	
DB8	1198	2010	2010	-	**225102923**	**225100490**	**225100493**	Pinza radiale | *Radial Caliper*
DB11 VLX	1200	2013	2013	-	**225102923**	**225100490**	**225100493**	Pinza radiale | *Radial Caliper*
DB12	1200	2012	2012	**225102860**	**225102863**	**225100490**	**225100493**	
DB9 Brivido	1200	2012	2012	**225102860**	**225102863**	**225100490**	**225100493**	
DB9 Brivido S	1200	-	-	-	**225103043**	-	-	
Impeto	1200	2016	2016	-	**225102923**	**225100490**	**225100493**	
BMW								
C1	125	2000	2000	**225101010**	**225101013**	**225101330**	**225101333**	
C1	200	2002	2002	**225101010**	**225101013**	**225101330**	**225101333**	

Modello *Model*	**CC**	**Da** *From*	**A** *To*	RMS YOUR BEST PARTNER **Anteriore Organica** *Front Organic*	SINTER **Anteriore Sinterizzata** *Front Sintered*	RMS YOUR BEST PARTNER **Posteriore Organica** *Rear Organic*	SINTER **Posteriore Sinterizzata** *Rear Sintered*	**Note** *Notes*
G GS	310	2017	2017	**225103310**	**225103313**	**225101330**	**225101333**	
G R	310	2016	2016	**225103310**	**225103313**	**225101330**	**225101333**	
G SMR	450	2009	2010	**225102860**	**225102863**	**225100750**	**225100753**	
G X	450	2008	2010	**225100430**	-	**225100750**	**225100753**	
C Sport	600	2012	2015	**225100870**	**225100873**	**225100870**	**225100873**	
C GT	650	2012	2015	**225100870**	**225100873**	**225100870**	**225100873**	
C GT	650	2016	2016	**225100870**	**225100873**	**225100870**	**225100873**	
C Sport	650	2016	2016	**225100870**	**225100873**	**225100870**	**225100873**	
F , ST	650	1994	2000	**225101010**	**225101013**	**225101330**	**225101333**	
F CS Scarver	650	2002	2006	**225101010**	**225101013**	**225101330**	**225101333**	
F GS	650	2008	2012	**225101010**	**225101013**	**225101330**	**225101333**	
F GS ABS	650	2001	2007	**225101010**	**225101013**	**225101330**	**225101333**	
F GS ABS	650	2008	2012	**225101010**	**225101013**	**225101330**	**225101333**	
F GS Dakar	650	2001	2007	**225101010**	**225101013**	**225101330**	**225101333**	
F GS, Rallye	650	2001	2007	**225101010**	**225101013**	**225101330**	**225101333**	
F ST Strada	650	1997	2001	**225101010**	**225101013**	**225101330**	**225101333**	
G GS	650	2009	2009	**225101010**	**225101013**	**225101330**	**225101333**	
G GS Sertao	650	2012	2014	**225101010**	**225101013**	**225101330**	**225101333**	
G Xchallenge	650	2006	2007	**225101010**	**225101013**	**225101330**	**225101333**	
G Xcountry	650	2006	2009	**225101010**	**225101013**	**225101330**	**225101333**	
G Xmoto	650	2006	2007	**225101100**	**225101103**	**225101330**	**225101333**	
R65 GS	650	1987	1992	**225103150**	**225103153**	-	-	
R65 GS	650	1991	1992	**225103150**	**225103153**	-	-	
R65 LS	650	1982	1985	**225103150**	**225103153**	-	-	
R65/1	650	1986	1986	-	-	**225103150**	**225103153**	
F GS	700	2013	2013	**225101010**	**225101013**	**225101330**	**225101333**	
R70 Series	700	1974	1980	-	-	-	-	
K75	750	1990	1990	**225103150**	**225103153**	**225103150**	**225103153**	
K75 C	750	1985	1988	**225103150**	**225103153**	-	-	
K75 RT	750	1991	1991	**225103150**	**225103153**	**225103150**	**225103153**	
K75 S, C	750	1985	1995	**225103150**	**225103153**	**225103150**	**225103153**	
F GS	800	2008	2008	**225101010**	**225101013**	**225101330**	**225101333**	
F GT	800	2013	2013	**225101100**	**225101103**	**225101330**	**225101333**	
F R	800	2009	2014	**225101100**	**225101103**	**225101330**	**225101333**	
F R	800	2015	2015	-	**225103193**	**225101330**	**225101333**	
F S	800	2006	2010	**225101100**	**225101103**	**225101330**	**225101333**	
F ST	800	2006	2012	**225101100**	**225101103**	**225101330**	**225101333**	
F ST Touring	800	2011	2012	**225101100**	**225101103**	**225101330**	**225101333**	
R80	800	1985	1985	**225103150**	**225103153**	-	-	
R80 G/S P.-D.	800	1986	1986	**225103150**	**225103153**	-	-	
R80 GS	800	1981	1987	**225103150**	**225103153**	-	-	
R80 R	800	1991	1991	-	-	**225103150**	**225103153**	
R80 R	800	1993	1993	**225103150**	**225103153**	-	-	
R80 RT	800	1983	1983	**225103150**	**225103153**	-	-	
R80/7	800	1979	1981	-	-	**225103150**	**225103153**	
R C	850	1999	2001	-	-	**225101380**	**225101383**	
R GS	850	1999	2007	-	-	**225101380**	**225101383**	
R R	850	1996	1996	-	-	**225101380**	**225101383**	
R R	850	2003	2007	**225102120***	**225103013**	**225101380**	**225101383**	* = Pastiglia non omologata | ** = Not homologated brake pad*
R RT	850	1996	2001	-	-	**225101330**	**225101333**	
R RT With Integral ABS	850	2001	2006	-	**225101603**	**225101380**	**225101383**	
K1	1000	1989	1989	-	-	**225103150**	**225103153**	
K100 LT	1000	1987	1987	**225103150**	**225103153**	**225103150**	**225103153**	

Modello *Model*	**CC**	**Da** *From*	**A** *To*	RMS YOUR BEST PARTNER **Anteriore Organica** *Front Organic*	SINTER **Anteriore Sinterizzata** *Front Sintered*	RMS YOUR BEST PARTNER **Posteriore Organica** *Rear Organic*	SINTER **Posteriore Sinterizzata** *Rear Sintered*	**Note** *Notes*
K100 LT	1000	1992	1992	-	-	**225103150**	**225103153**	
K100 LT ABS	1000	1989	1989	**225103150**	**225103153**	**225103150**	**225103153**	
K100 RS	1000	1990	1990	-	-	**225103150**	**225103153**	
K100 RS ABS	1000	1988	1989	**225103150**	**225103153**	**225103150**	**225103153**	
K100 RS, RT	1000	1983	1989	**225103150**	**225103153**	**225103150**	**225103153**	
R100	1000	1981	1984	**225103150**	**225103153**	**225103150**	**225103153**	
R100 CS,RS, RT	1000	1981	1984	**225103150**	**225103153**	**225103150**	**225103153**	
R100 R	1000	1991	1991	-	-	**225103150**	**225103153**	
R100 RS	1000	1976	1980	-	-	**225103150**	**225103153**	
R100 RS	1000	1993	1993	**225103150**	**225103153**	**225103150**	**225103153**	
R100 S	1000	1978	1980	-	-	**225103150**	**225103153**	
R100 T	1000	1979	1979	-	-	**225103150**	**225103153**	
S R	1000	2013	2013	-	**225103003**	**225101330**	**225101333**	
S RR	1000	2009	2009	-	**225103003**	**225101330**	**225101333**	
S RR HP4	1000	2012	2014	-	**225102923**	**225101330**	**225101333**	
S XR	1000	2015	2015	-	**225103193**	**225101380**	**225101383**	
K1100 LT/SE	1100	1992	1992	-	-	**225103150**	**225103153**	
K1100 RS	1100	1993	1993	-	-	**225103150**	**225103153**	
R GS	1100	1999	1999	-	-	**225101380**	**225101383**	
R R	1100	1999	1999	-	-	**225101380**	**225101383**	
R RT	1100	1995	1995	-	-	**225101380**	**225101383**	
R S	1100	1999	2000	-	-	**225101380**	**225101383**	
R S With Integral ABS	1100	2001	2005	**225102120***	**225103013**	**225101380**	**225101383**	* = Pastiglia non omologata | * = *Not homologated brake pad*
R S Without Integral ABS	1100	2001	2005	-	**225101603**	**225101380**	**225101383**	
R1100 GS	1100	1994	1994	-	-	**225101380**	**225101383**	
R1100 RS	1100	1993	1993	-	-	**225103150**	**225103153**	
R1100 RS	1100	1994	1994	-	-	**225103150**	**225103153**	
R GS	1150	2000	2001	-	-	**225101380**	**225101383**	
R GS, GS Adventurer	1150	2002	2005	-	**225101603**	**225101380**	**225101383**	
R R	1150	2001	2006	**225102120***	**225103013**	**225101380**	**225101383**	* = Pastiglia non omologata | * = *Not homologated brake pad*
R R Rockster	1150	2003	2005	**225102120***	**225103013**	**225101380**	**225101383**	* = Pastiglia non omologata | * = *Not homologated brake pad*
R RS	1150	2001	2004	**225102120***	**225103013**	**225101380**	**225101383**	* = Pastiglia non omologata | * = *Not homologated brake pad*
R RT With Integral ABS	1150	2001	2006	-	**225101603**	**225101380**	**225101383**	
HP2 Enduro	1200	2004	2006	**225101010**	**225101013**	**225100430**	-	
HP2 Megamoto	1200	2006	2008	-	**225101603**	**225101380**	**225101383**	
HP2 Sport	1200	2008	2010	-	**225102923**	**225100430**	-	
K GT (K41) With Integral ABS	1200	2002	2005	-	**225101603**	**225103150**	**225103153**	
K GT (K44) With Integral ABS	1200	2004	2004	-	**225101603**	**225100430**	-	
K LT With Integral ABS	1200	2001	2008	**225102120***	**225103013**	-	-	* = Pastiglia non omologata | * = *Not homologated brake pad*
K R	1200	2005	2008	**225102120***	**225103013**	**225101380**	**225101383**	* = Pastiglia non omologata | * = *Not homologated brake pad*
K R Sport	1200	2005	2007	**225102120***	**225103013**	**225101380**	**225101383**	* = Pastiglia non omologata | * = *Not homologated brake pad*
K RS	1200	1997	2000	-	-	**225103150**	**225103153**	
K RS	1200	2001	2005	-	**225101603**	**225103150**	**225103153**	
K S	1200	2005	2008	-	**225101603**	**225101380**	**225101383**	
R C	1200	1998	2002	-	-	**225101380**	**225101383**	
R C Classic	1200	2003	2004	**225102120***	**225103013**	**225101380**	**225101383**	* = Pastiglia non omologata | * = *Not homologated brake pad*
R C Independent	1200	2003	2004	**225102120***	**225103013**	**225101380**	**225101383**	* = Pastiglia non omologata | * = *Not homologated brake pad*

Modello *Model*	**CC**	**Da** *From*	**A** *To*	**Anteriore Organica** *Front Organic*	**Anteriore Sinterizzata** *Front Sintered*	**Posteriore Organica** *Rear Organic*	**Posteriore Sinterizzata** *Rear Sintered*	**Note** *Notes*
R C Montauk	1200	2002	2004	**225102120***	**225103013**	**225101380**	**225101383**	* = Pastiglia non omologata | * = *Not homologated brake pad*
R CL	1200	2003	2004	**225102120***	**225103013**	-	-	* = Pastiglia non omologata | * = *Not homologated brake pad*
R GS	1200	2004	2012	-	**225101603**	**225101380**	**225101383**	
R GS	1200	2013	2013	-	**225103193**	**225101010**	**225101013**	
R GS Adventure	1200	2014	2014	-	**225103193**	**225101010**	**225101013**	
R GS Tripple Black	1200	2011	2011	-	**225101603**	**225101380**	**225101383**	
R Nine-T	1200	2014	2014	-	**225103193**	**225100430**	-	
R Nine-T Pure	1200	2017	2017	**225101100**	**225101103**	**225100430**	-	
R Nine-T Racer	1200	2017	2017	**225101100**	**225101103**	**225100430**	-	
R Nine-T Scrambler	1200	2016	2016	**225101100**	**225101103**	**225100430**	-	
R Nine-T Urban GS	1200	2017	2017	**225101100**	**225101103**	**225100430**	-	
R R	1200	2007	2014	**225102120***	**225103013**	**225101380**	**225101383**	* = Pastiglia non omologata | * = *Not homologated brake pad*
R R	1200	2015	2015	-	**225103193**	**225101010**	**225101013**	
R RS	1200	2015	2015	-	**225103193**	**225101010**	**225101013**	
R RT	1200	2006	2013	-	**225101603**	**225101380**	**225101383**	
R RT	1200	2014	2014	-	**225103193**	**225101010**	**225101013**	
R S	1200	2006	2007	-	**225101603**	**225101380**	**225101383**	
R ST	1200	2006	2007	-	**225101603**	**225101380**	**225101383**	
K GT	1300	2009	2010	-	**225101603**	**225100430**	-	
K R	1300	2009	2009	**225102120***	**225103013**	**225101380**	**225101383**	* = Pastiglia non omologata | * = *Not homologated brake pad*
K R Dynamic	1300	2011	2011	**225102120***	**225103013**	**225101380**	**225101383**	* = Pastiglia non omologata | * = *Not homologated brake pad*
K S	1300	2009	2009	-	**225101603**	**225101380**	**225101383**	
K B	1600	2017	2017	**225102120***	**225103013**	**225101010**	**225101013**	* = Pastiglia non omologata | * = *Not homologated brake pad*
K GT	1600	2011	2011	**225102120***	**225103013**	**225101010**	**225101013**	* = Pastiglia non omologata | * = *Not homologated brake pad*
K GTL	1600	2011	2011	**225102120***	**225103013**	**225101010**	**225101013**	* = Pastiglia non omologata | * = *Not homologated brake pad*
BOMBARDIER								
Rally 2x4	200	2003	2004	**225100040**	-	-	-	
Rally 2x4	200	2005	2006	**225100040**	-	**225101200**	-	
DS	250	2006	2006	**225102870**	**225102873**	**225102870**	**225102873**	Pinza sinistra | *Left Caliper*
DS	250	2006	2006	**225102890**	**225102893**	**225102870**	**225102873**	Pinza destra | *Right Caliper*
Outlander	330	2003	2006	**225102870**	**225102873**	**225102870**	**225102873**	Pinza sinistra | *Left Caliper*
Outlander	330	2003	2006	**225102890**	**225102893**	**225102870**	**225102873**	Pinza destra | *Right Caliper*
Outlander	400	2003	2006	**225102870**	**225102873**	**225102870**	**225102873**	Pinza sinistra | *Left Caliper*
Outlander	400	2003	2006	**225102890**	**225102893**	**225102870**	**225102873**	Pinza destra | *Right Caliper*
Outlander Max	400	2003	2006	**225102870**	**225102873**	**225102870**	**225102873**	Pinza sinistra | *Left Caliper*
Outlander Max	400	2003	2006	**225102890**	**225102893**	**225102870**	**225102873**	Pinza destra | *Right Caliper*
Quest	500	2002	2006	**225102870**	**225102873**	**225102870**	**225102873**	Pinza sinistra | *Left Caliper*
Quest	500	2002	2006	**225102890**	**225102893**	**225102870**	**225102873**	Pinza destra | *Right Caliper*
Traxter 4x4	500	1999	2000	**225100490**	**225100493**	**225100490**	**225100493**	
Traxter 4x4	500	2001	2006	**225102870**	**225102873**	**225102890**	**225102893**	Pinza sinistra | *Left Caliper*
Traxter 4x4	500	2001	2006	**225102890**	**225102893**	**225102890**	**225102893**	Pinza destra | *Right Caliper*
Traxter Max	500	2003	2005	**225102870**	**225102873**	**225102890**	**225102893**	Pinza sinistra | *Left Caliper*
Traxter Max	500	2003	2005	**225102890**	**225102893**	**225102890**	**225102893**	Pinza destra | *Right Caliper*
DS	650	2001	2006	**225102870**	**225102873**	**225102870**	**225102873**	Pinza sinistra | *Left Caliper*
DS	650	2001	2006	**225102890**	**225102893**	**225102870**	**225102873**	Pinza destra | *Right Caliper*
Quest	650	2002	2006	**225102870**	**225102873**	**225102870**	**225102873**	Pinza sinistra | *Left Caliper*
Quest	650	2002	2006	**225102890**	**225102893**	**225102870**	**225102873**	Pinza destra | *Right Caliper*
Quest Max	650	2003	2006	**225102870**	**225102873**	**225102890**	**225102893**	Pinza sinistra | *Left Caliper*

Modello *Model*	**CC**	**Da** *From*	**A** *To*	RMS YOUR BEST PARTNER **Anteriore Organica** *Front Organic*	SINTER **Anteriore Sinterizzata** *Front Sintered*	RMS YOUR BEST PARTNER **Posteriore Organica** *Rear Organic*	SINTER **Posteriore Sinterizzata** *Rear Sintered*	**Note** *Notes*
Quest Max	650	2003	2006	**225102890**	**225102893**	**225102890**	**225102893**	Pinza destra | *Right Caliper*
Traxter Max	650	2003	2005	**225102870**	**225102873**	**225102890**	**225102893**	Pinza sinistra | *Left Caliper*
Traxter Max	650	2003	2005	**225102890**	**225102893**	**225102890**	**225102893**	Pinza destra | *Right Caliper*
Outlander	800	2006	2006	**225102870**	**225102873**	**225102870**	**225102873**	Pinza sinistra | *Left Caliper*
Outlander	800	2006	2006	**225102890**	**225102893**	**225102870**	**225102873**	Pinza destra | *Right Caliper*
Outlander XT	800	2006	2006	**225102870**	**225102873**	**225102870**	**225102873**	Pinza sinistra | *Left Caliper*
Outlander XT	800	2006	2006	**225102890**	**225102893**	**225102870**	**225102873**	Pinza destra | *Right Caliper*
BUELL								
Blast	500	2001	2009	**225100870**	**225100873**	**225102610**	**225102613**	
XB9R Firebolt	984	2002	2010	-	-	**225102610**	**225102613**	
XB9S Lightning	984	2003	2010	-	-	**225102610**	**225102613**	
XB9SX CityX	984	2005	2010	-	-	**225102610**	**225102613**	
M2 Cyclone	1200	1998	2002	-	-	**225102610**	**225102613**	
S1 Lightning	1200	1998	2002	-	-	**225102610**	**225102613**	
S1 Whitelightning	1200	1998	2002	-	-	**225102610**	**225102613**	
S3 Thunderbolt	1200	1998	2002	-	-	**225102610**	**225102613**	
X1 Lightning	1200	2001	2002	-	-	**225102610**	**225102613**	
XB12R Firebolt	1200	2004	2008	-	-	**225102610**	**225102613**	
XB12R Firebolt	1200	2009	2010	-	-	**225102610**	**225102613**	
XB12S Lightning	1200	2004	2008	-	-	**225102610**	**225102613**	
XB12Scg Lightning	1200	2006	2008	-	-	**225102610**	**225102613**	
XB12Scg Lightning	1200	2009	2010	-	-	**225102610**	**225102613**	
XB12Ss Lightning Long	1200	2006	2008	-	-	**225102610**	**225102613**	
XB12Ss Lightning Long	1200	2009	2010	-	-	**225102610**	**225102613**	
XB12STT Super TT	1200	2007	2010	-	-	**225102610**	**225102613**	
XB12X Ulysses	1200	2006	2010	-	-	**225102610**	**225102613**	
BULTACO								
Astro	50	2001	2001	**225100740**	-	**225100080**	**225100083**	
Lobito	50	1999	1999	**225100740**	-	**225100080**	**225100083**	
CAGIVA								
Blues	50	1989	1989	**225100060**	**225100063**	-	-	
City	50	1992	1994	**225103240**	-	-	-	
City	50	1995	1995	**225102750**	**225102753**	-	-	
City	50	2008	2008	**225100180**	-	-	-	
Cocis	50	1988	1988	**225100010**	**225100013**	-	-	
Cocis	50	1989	1989	**225100010**	**225100013**	**225100010**	**225100013**	
Corsa	50	1998	1998	**225100080**	**225100083**	-	-	
Cucciolo	50	1997	1997	**225100010**	**225100013**	-	-	
Lucky Explorer	50	1988	1988	**225100010**	**225100013**	-	-	
Mantis	50	1999	1999	**225100080**	**225100083**	-	-	
Mito	50	1999	1999	**225102590**	**225102593**	**225100080**	**225100083**	
Nuvola	50	2000	2000	**225100010**	**225100013**	-	-	
Prima	50	1992	1992	**225100010**	**225100013**	**225100010**	**225100013**	
Prima	50	1993	1993	-	-	**225100160**	-	
Progress	50	1998	1998	**225100080**	**225100083**	-	-	
Super City	50	1993	1993	-	-	**225100010**	**225100013**	
Supercity	50	1992	1992	**225100010**	**225100013**	**225100010**	**225100013**	
W4	50	1992	1992	**225100010**	**225100013**	**225100010**	**225100013**	
WMX	50	1989	1989	-	-	**225101200**	-	
City	80	1993	1993	-	-	**225100160**	-	
Cocis	80	1991	1991	**225100010**	**225100013**	-	-	
LR	80	1983	1983	**225100010**	**225100013**	-	-	
Prima	80	1992	1992	-	-	**225100160**	-	
SST	80	1983	1983	**225100010**	**225100013**	-	-	

Modello *Model*	**CC**	**Da** *From*	**A** *To*	**Anteriore Organica** *Front Organic*	**Anteriore Sinterizzata** *Front Sintered*	**Posteriore Organica** *Rear Organic*	**Posteriore Sinterizzata** *Rear Sintered*	**Note** *Notes*
Super City	80	1994	1994	-	-	**225100010**	**225100013**	
Supercity	80	1992	1993	**225100010**	**225100013**	**225100010**	**225100013**	
SXT	80	1983	1983	**225100010**	**225100013**	-	-	
W4	80	1992	1992	**225100010**	**225100013**	**225100010**	**225100013**	
Passing	110	1994	1994	**225101420**	**225101423**	-	-	
Aletta Electra	125	1987	1987	**225100010**	**225100013**	-	-	
Aletta Oro	125	1986	1986	**225100010**	**225100013**	**225100010**	**225100013**	
Blues	125	1993	1993	**225100010**	**225100013**	**225100010**	**225100013**	
Blues	125	-	-	**225100060**	**225100063**	**225100010**	**225100013**	
Cruiser	125	1988	1988	-	-	**225100010**	**225100013**	
Cucciolo	125	2000	2000	**225100010**	**225100013**	-	-	
Dakar	125	1986	1986	**225100010**	**225100013**	-	-	
Elefantre	125	1987	1987	**225100010**	**225100013**	-	-	
Enduro	125	1986	1986	**225100010**	**225100013**	-	-	
Freccia	125	1989	1989	-	-	**225100010**	**225100013**	
Freccia C 12 R	125	1991	1991	-	-	**225100010**	**225100013**	
K7	125	1991	1991	-	-	**225100010**	**225100013**	
Mito	125	1991	1992	-	-	**225100010**	**225100013**	
Mito	125	1993	1993	**225100520**	**225100523**	**225100010**	**225100013**	
N1	125	1996	1996	-	-	**225100010**	**225100013**	
Nuvola	125	2000	2000	**225100010**	**225100013**	-	-	
Planet	125	1997	2007	**225100520**	**225100523**	**225100010**	**225100013**	
Raptor	125	2003	2010	**225100520**	**225100523**	**225100010**	**225100013**	
Roadster	125	1994	1994	**225100060**	**225100063**	-	-	
Stella	125	1997	1997	**225102590**	**225102593**	-	-	
Supercity	125	1992	2000	-	-	**225100010**	**225100013**	
Tamanaco	125	1989	1989	-	-	**225100010**	**225100013**	
Tamanaco	125	-	-	-	-	-	-	
W8	125	1992	1995	**225100010**	**225100013**	**225100010**	**225100013**	
WMX GP-Replica	125	1986	1986	**225100010**	**225100013**	-	-	
WRX	125	-	-	**225100010**	**225100013**	-	-	
Elefant	200	1986	1986	**225100010**	**225100013**	-	-	
Roadster	200	1996	1996	**225100060**	**225100063**	-	-	
MXR	250	1982	1982	**225100010**	**225100013**	-	-	
SST Ala Verde	250	1981	1981	**225100010**	**225100013**	-	-	
WMX GP	250	1982	1982	**225100010**	**225100013**	-	-	
Alazurra	350	1985	1986	**225100010**	**225100013**	**225100010**	**225100013**	
Alazurra	350	1987	1987	**225100010**	**225100013**	**225100010**	**225100013**	
Elefant	350	1986	1986	-	-	**225100010**	**225100013**	
SST	350	1983	1983	**225100010**	**225100013**	-	-	
SST Ala Verde	350	1981	1981	**225100010**	**225100013**	-	-	
SXT Ala Rosa	350	1982	1982	**225100010**	**225100013**	-	-	
T4 E	350	1987	1987	**225100010**	**225100013**	-	-	
T4 R	350	1987	1987	**225100010**	**225100013**	-	-	
W 12	350	1992	1992	-	-	**225100010**	**225100013**	
MXR	400	1982	1982	**225100010**	**225100013**	-	-	
Canyon	500	1999	1999	**225103170**	**225103173**	**225101070**	**225101073**	
Mito	500	2007	2007	**225100520**	**225100523**	**225100010**	**225100013**	
MXR	500	1982	1982	**225100010**	**225100013**	-	-	
River	500	2000	2000	**225100520**	**225100523**	**225100010**	**225100013**	
T4 E	500	1987	1987	**225100010**	**225100013**	-	-	
WMX	500	1985	1986	**225100010**	**225100013**	-	-	
WMX Cross	500	1987	1987	**225100010**	**225100013**	**225100010**	**225100013**	
SP Mito	525	2008	2010	**225100520**	**225100523**	**225100010**	**225100013**	

Modello *Model*	**CC**	**Da** *From*	**A** *To*	RMS YOUR BEST PARTNER **Anteriore Organica** *Front Organic*	SINTER **Anteriore Sinterizzata** *Front Sintered*	RMS YOUR BEST PARTNER **Posteriore Organica** *Rear Organic*	SINTER **Posteriore Sinterizzata** *Rear Sintered*	**Note** *Notes*
Canyon	600	1995	1995	**225101420**	**225101423**	**225101070**	**225101073**	
River	600	1994	1999	**225100520**	**225100523**	**225100010**	**225100013**	
Alazurra	650	-	-	**225100010**	**225100013**	**225100010**	**225100013**	
Elefant	650	1986	1986	-	-	**225100010**	**225100013**	
Raptor	650	2001	2001	**225101100**	**225101103**	**225100490**	**225100493**	
V-Raptor	650	2001	2001	**225101100**	**225101103**	**225100490**	**225100493**	
Elefant	750	1988	1988	**225100010**	**225100013**	**225100010**	**225100013**	
Elefant	750	1993	1995	**225103170**	**225103173**	**225100430**	-	
Lucky Explorer	750	1988	1988	-	-	**225100010**	**225100013**	
Canyon I.E.	900	1997	1997	**225103170**	**225103173**	**225101070**	**225101073**	
Elefant	900	1993	1997	**225100430**	-	**225100430**	-	
Elefant I.E.	900	1991	1992	**225103170**	**225103173**	**225101070**	**225101073**	
Gran Canyon	900	1999	2004	**225100870**	**225100873**	**225101070**	**225101073**	
Navigator, T	1000	2000	2005	**225100870**	**225100873**	**225101070**	**225101073**	
Raptor	1000	2000	2000	**225101100**	**225101103**	**225100490**	**225100493**	
V-Raptor	1000	2000	2000	**225101100**	**225101103**	**225100490**	**225100493**	
X3 Raptor	1000	2004	2004	**225102860**	**225102863**	**225100490**	**225100493**	
X-Raptor	1000	2003	2003	**225102860**	**225102863**	**225100490**	**225100493**	
Xtra Raptor	1000	2002	2002	**225101100**	**225101103**	**225100490**	**225100493**	
CAN-AM								
DS X	90	2008	2008	**225100040**	-	**225100040**	-	
ASE	200	1986	1986	**225100010**	**225100013**	-	-	
ASE	250	1986	1986	**225100010**	**225100013**	-	-	
DS	250	2008	2008	**225103070**	**225103073**	**225103070**	**225103073**	
MX LC	250	1986	1986	**225100010**	**225100013**	-	-	
ASE	350	1986	1986	**225100010**	**225100013**	-	-	
Outlander EFi	400	2009	2009	**225102870**	**225102873**	**225102890**	**225102893**	Pinza sinistra | *Left Caliper*
Outlander EFi	400	2009	2009	**225102890**	**225102893**	**225102890**	**225102893**	Pinza destra | *Right Caliper*
Outlander MAX STD	400	2007	2007	**225102870**	**225102873**	**225102890**	**225102893**	Pinza sinistra | *Left Caliper*
Outlander MAX STD	400	2007	2007	**225102890**	**225102893**	**225102890**	**225102893**	Pinza destra | *Right Caliper*
Outlander MAX XT	400	2007	2007	**225102870**	**225102873**	**225102890**	**225102893**	Pinza sinistra | *Left Caliper*
Outlander MAX XT	400	2007	2007	**225102890**	**225102893**	**225102890**	**225102893**	Pinza destra | *Right Caliper*
Outlander STD	400	2007	2007	**225102870**	**225102873**	**225102890**	**225102893**	Pinza sinistra | *Left Caliper*
Outlander STD	400	2007	2007	**225102890**	**225102893**	**225102890**	**225102893**	Pinza destra | *Right Caliper*
Outlander XT	400	2007	2007	**225102870**	**225102873**	**225102890**	**225102893**	Pinza sinistra | *Left Caliper*
Outlander XT	400	2007	2007	**225102890**	**225102893**	**225102890**	**225102893**	Pinza destra | *Right Caliper*
ASE	406	1987	1987	**225100010**	**225100013**	-	-	
ASE	500	1986	1986	**225100010**	**225100013**	-	-	
MX	500	1986	1986	**225100010**	**225100013**	-	-	
Outlander MAX STD	500	2007	2012	**225102870**	**225102873**	**225102890**	**225102893**	Pinza sinistra | *Left Caliper*
Outlander MAX STD	500	2007	2012	**225102890**	**225102893**	**225102890**	**225102893**	Pinza destra | *Right Caliper*
Outlander MAX XT	500	2007	2012	**225102870**	**225102873**	**225102890**	**225102893**	Pinza sinistra | *Left Caliper*
Outlander MAX XT	500	2007	2012	**225102890**	**225102893**	**225102890**	**225102893**	Pinza destra | *Right Caliper*
Outlander STD	500	2007	2012	**225102870**	**225102873**	**225102890**	**225102893**	Pinza sinistra | *Left Caliper*
Outlander STD	500	2007	2012	**225102890**	**225102893**	**225102890**	**225102893**	Pinza destra | *Right Caliper*
Outlander XT	500	2007	2012	**225102870**	**225102873**	**225102890**	**225102893**	Pinza sinistra | *Left Caliper*
Outlander XT	500	2007	2012	**225102890**	**225102893**	**225102890**	**225102893**	Pinza destra | *Right Caliper*
Renegade	500	2008	2011	**225102870**	**225102873**	**225102890**	**225102893**	Pinza sinistra | *Left Caliper*
Renegade	500	2008	2011	**225102890**	**225102893**	**225102890**	**225102893**	Pinza destra | *Right Caliper*
Sonic	560	1986	1986	**225100010**	**225100013**	-	-	
Outlander MAX STD	650	2007	2012	**225102870**	**225102873**	**225102890**	**225102893**	Pinza sinistra | *Left Caliper*
Outlander MAX STD	650	2007	2012	**225102890**	**225102893**	**225102890**	**225102893**	Pinza destra | *Right Caliper*
Outlander MAX XT	650	2007	2012	**225102870**	**225102873**	**225102890**	**225102893**	Pinza sinistra | *Left Caliper*
Outlander MAX XT	650	2007	2012	**225102890**	**225102893**	**225102890**	**225102893**	Pinza destra | *Right Caliper*

Modello *Model*	**CC**	**Da** *From*	**A** *To*	**Anteriore Organica** *Front Organic*	**Anteriore Sinterizzata** *Front Sintered*	**Posteriore Organica** *Rear Organic*	**Posteriore Sinterizzata** *Rear Sintered*	**Note** *Notes*
Outlander STD	650	2007	2012	**225102870**	**225102873**	**225102890**	**225102893**	Pinza sinistra | *Left Caliper*
Outlander STD	650	2007	2012	**225102890**	**225102893**	**225102890**	**225102893**	Pinza destra | *Right Caliper*
Outlander XT	650	2007	2012	**225102870**	**225102873**	**225102890**	**225102893**	Pinza sinistra | *Left Caliper*
Outlander XT	650	2007	2012	**225102890**	**225102893**	**225102890**	**225102893**	Pinza destra | *Right Caliper*
Commander	800	2011	2011	**225101070**	**225101073**	**225101420**	**225101423**	Pinza sinistra | *Left Caliper*
Commander	800	2011	2011	**225101420**	**225101423**	**225101420**	**225101423**	Pinza destra | *Right Caliper*
Outlander MAX LTD	800	2007	2011	**225102870**	**225102873**	**225102890**	**225102893**	Pinza sinistra | *Left Caliper*
Outlander MAX LTD	800	2007	2011	**225102890**	**225102893**	**225102890**	**225102893**	Pinza destra | *Right Caliper*
Outlander MAX STD	800	2007	2011	**225102870**	**225102873**	**225102890**	**225102893**	Pinza sinistra | *Left Caliper*
Outlander MAX STD	800	2007	2011	**225102890**	**225102893**	**225102890**	**225102893**	Pinza destra | *Right Caliper*
Outlander MAX XT	800	2007	2011	**225102870**	**225102873**	**225102890**	**225102893**	Pinza sinistra | *Left Caliper*
Outlander MAX XT	800	2007	2011	**225102890**	**225102893**	**225102890**	**225102893**	Pinza destra | *Right Caliper*
Outlander STD	800	2007	2011	**225102870**	**225102873**	**225102890**	**225102893**	Pinza sinistra | *Left Caliper*
Outlander STD	800	2007	2011	**225102890**	**225102893**	**225102890**	**225102893**	Pinza destra | *Right Caliper*
Outlander XT	800	2007	2011	**225102870**	**225102873**	**225102890**	**225102893**	Pinza sinistra | *Left Caliper*
Outlander XT	800	2007	2011	**225102890**	**225102893**	**225102890**	**225102893**	Pinza destra | *Right Caliper*
Renegade	800	2008	2011	**225102870**	**225102873**	**225102890**	**225102893**	Pinza sinistra | *Left Caliper*
Renegade	800	2008	2011	**225102890**	**225102893**	**225102890**	**225102893**	Pinza destra | *Right Caliper*
Renegade EFi	800	2007	2011	**225102870**	**225102873**	**225102890**	**225102893**	Pinza sinistra | *Left Caliper*
Renegade EFi	800	2007	2011	**225102890**	**225102893**	**225102890**	**225102893**	Pinza destra | *Right Caliper*
Renegade X	800	2008	2011	**225102870**	**225102873**	**225102890**	**225102893**	Pinza sinistra | *Left Caliper*
Renegade X	800	2008	2011	**225102890**	**225102893**	**225102890**	**225102893**	Pinza destra | *Right Caliper*
Commander	1000	2011	2011	**225101070**	**225101073**	**225101420**	**225101423**	Pinza sinistra | *Left Caliper*
Commander	1000	2011	2011	**225101420**	**225101423**	**225101420**	**225101423**	Pinza destra | *Right Caliper*
Commander MAX	1000	2014	2014	**225101070**	**225101073**	**225102870**	**225102873**	Pinza sinistra | *Left Caliper*
Commander MAX	1000	2014	2014	**225101420**	**225101423**	**225102890**	**225102893**	Pinza destra | *Right Caliper*
Maverick	1000	2013	2013	**225101070**	**225101073**	**225102870**	**225102873**	Pinza sinistra | *Left Caliper*
Maverick	1000	2013	2013	**225101420**	**225101423**	**225102890**	**225102893**	Pinza destra | *Right Caliper*
CANNONDALE								
MX	400	2000	2003	**225100920**	**225100923**	**225101790**	-	
Blaze	440	2003	2003	**225102870**	**225102873**	**225102870**	**225102873**	Pinza sinistra | *Left Caliper*
Blaze	440	2003	2003	**225102890**	**225102893**	**225102870**	**225102873**	Pinza destra | *Right Caliper*
C R	440	2003	2003	**225100920**	**225100923**	**225101790**	-	
Cannibal	440	2003	2003	**225102870**	**225102873**	**225102870**	**225102873**	Pinza sinistra | *Left Caliper*
Cannibal	440	2003	2003	**225102890**	**225102893**	**225102870**	**225102873**	Pinza destra | *Right Caliper*
E, A, R	440	2003	2003	**225100920**	**225100923**	**225101790**	-	
Glamis	440	2003	2003	**225102870**	**225102873**	**225102870**	**225102873**	Pinza sinistra | *Left Caliper*
Glamis	440	2003	2003	**225102890**	**225102893**	**225102870**	**225102873**	Pinza destra | *Right Caliper*
Moto	440	2003	2003	**225102870**	**225102873**	**225102870**	**225102873**	Pinza sinistra | *Left Caliper*
Moto	440	2003	2003	**225102890**	**225102893**	**225102870**	**225102873**	Pinza destra | *Right Caliper*
S	440	2003	2003	**225100520**	**225100523**	**225101790**	-	
Speed	440	2003	2003	**225102870**	**225102873**	**225102870**	**225102873**	Pinza sinistra | *Left Caliper*
Speed	440	2003	2003	**225102890**	**225102893**	**225102870**	**225102873**	Pinza destra | *Right Caliper*
X	440	2003	2003	**225100920**	**225100923**	**225101790**	-	
CF MOTO								
Papio	125	2017	2017	**225100350**	**225100353**	-	-	
NK Efi	400	2017	2017	**225101010**	**225101013**	**225101330**	**225101333**	
U-Force	550	2015	2015	**225101070**	**225101073**	-	-	Pinza sinistra | *Left Caliper*
U-Force	550	2015	2015	**225101420**	**225101423**	-	-	Pinza destra | *Right Caliper*
Z-Force	550	2015	2015	**225101070**	**225101073**	-	-	Pinza sinistra | *Left Caliper*
Z-Force	550	2015	2015	**225101420**	**225101423**	-	-	Pinza destra | *Right Caliper*
NK	650	2014	2016	**225101010**	**225101013**	**225101330**	**225101333**	
NK Efi	650	2017	2017	**225101010**	**225101013**	**225101330**	**225101333**	
TK	650	2014	2014	**225101010**	**225101013**	**225101330**	**225101333**	

Modello *Model*	**CC**	**Da** *From*	**A** *To*	RMS YOUR BEST PARTNER **Anteriore Organica** *Front Organic*	SINTER **Anteriore Sinterizzata** *Front Sintered*	RMS YOUR BEST PARTNER **Posteriore Organica** *Rear Organic*	SINTER **Posteriore Sinterizzata** *Rear Sintered*	**Note** *Notes*
Z-Force EX	800	2015	2015	**225101070**	**225101073**	-	-	Pinza sinistra | *Left Caliper*
Z-Force EX	800	2015	2015	**225101420**	**225101423**	-	-	Pinza destra | *Right Caliper*
CPI								
Baby	50	2002	2002	**225100040**	-	**225120061**	-	
GTR	50	2002	2002	**225100360**	**225100363**	-	-	
GTR	50	2003	2003	**225100490**	**225100493**	**225100190**	**225100193**	
GTS	50	2002	2002	**225100360**	**225100363**	**225100280**	-	
Hussar	50	2001	2002	**225100040**	-	**225120061**	-	
Hussar	50	2003	2006	-	-	**225120061**	-	
Mars	50	2001	2001	-	-	**225120061**	-	
Oliver	50	2003	2003	-	-	**225120061**	-	
Oliver City	50	2003	2012	-	-	**225120061**	-	
Oliver Sport	50	2003	2012	-	-	**225120061**	-	
Popcorn	50	2001	2002	-	-	**225120061**	-	
Supermoto, Supercross	50	2003	2003	**225100080**	**225100083**	**225100080**	**225100083**	
GTR, GTS	125	2002	2002	**225100360**	**225100363**	**225100190**	**225100193**	
Sahel	125	2002	2002	**225100920**	**225100923**	**225102630**	**225102633**	
Supermoto	125	2007	2007	**225100080**	**225100083**	-	-	
X-Large	125	2002	2002	**225100490**	**225100493**	**225100490**	**225100493**	
GTR, GTS	200	2002	2002	**225100360**	**225100363**	**225100190**	**225100193**	
X-Large	200	2002	2002	**225100490**	**225100493**	**225100490**	**225100493**	
XS ATV	250	2007	2007	**225103070**	**225103073**	-	-	
XS Quad	250	2006	2006	**225100040**	-	-	-	
CZ								
CZ	180	1993	1993	**225103150**	**225103153**	-	-	
DAELIM								
a Four	50	2006	2006	**225100580**	**225100583**	-	-	
Besbi	50	2007	2007	**225102630**	**225102633**	-	-	
Bonita	50	2009	2009	**225103240**	-	-	-	
Delfino	50	1999	1999	**225101440**	-	-	-	
E-Five	50	2003	2003	**225101440**	-	-	-	
GZ G Message	50	1998	1998	**225103240**	-	-	-	
History, S-Five	50	2001	2001	**225101440**	-	**225101440**	-	
Message II	50	2002	2002	**225101440**	-	-	-	
SE Cordi	50	2006	2006	**225101440**	-	-	-	
SJ S-Five	50	2006	2012	**225103240**	-	-	-	
Tapo	50	1999	1999	**225101440**	-	-	-	
Vivo	50	1999	1999	**225101440**	-	-	-	
Altino	100	1999	1999	**225101440**	-	-	-	
Delfino	100	1999	1999	**225101440**	-	-	-	
City Ace	110	2003	2003	**225102590**	**225102593**	-	-	
Altino	125	2002	2002	**225101440**	-	-	-	
Delfino	125	2008	2008	**225100580**	**225100583**	-	-	
DLX, Otello DLX	125	2001	2001	**225101440**	-	**225101440**	-	
History	125	2001	2001	**225101440**	-	**225101440**	-	
Message II	125	2000	2000	**225101440**	-	-	-	
NF	125	2003	2003	**225101440**	-	-	-	
NS II	125	2000	2000	**225101440**	-	-	-	
Otello	125	1999	1999	**225101440**	-	-	-	
Otello	125	2008	2008	**225100380**	**225100383**	**225101440**	-	
Roadwin	125	2004	2004	**225102640**	**225102643**	**225100350**	**225100353**	
Rocket	125	1999	1999	**225102640**	**225102643**	-	-	
S2	125	2006	2006	**225100870**	**225100873**	**225101440**	-	
S2 FI	125	2007	2007	**225100380**	**225100383**	**225101440**	-	

Modello *Model*	**CC**	**Da** *From*	**A** *To*	RMS YOUR BEST PARTNER **Anteriore Organica** *Front Organic*	SINTER **Anteriore Sinterizzata** *Front Sintered*	RMS YOUR BEST PARTNER **Posteriore Organica** *Rear Organic*	SINTER **Posteriore Sinterizzata** *Rear Sintered*	**Note** *Notes*
SC Besbi	125	2008	2008	**225102630**	**225102633**	-	-	
SL U3 FI	125	2007	2007	**225100380**	**225100383**	**225101440**	-	
SV S3	125	2011	2011	**225100380**	**225100383**	**225100350**	**225100353**	
VL Daystar	125	2000	2000	**225102640**	**225102643**	-	-	
VS , Evolution	125	1995	1995	**225101440**	-	-	-	
VT Evolution	125	2000	2000	**225102640**	**225102643**	-	-	
VT Magna	125	1997	1997	**225102640**	**225102643**	-	-	
Roadwin	250	2008	2008	**225102640**	**225102643**	**225100350**	**225100353**	
S2	250	2006	2006	**225100870**	**225100873**	**225101440**	-	
ST Sector Quad	250	2005	2006	**225100040**	-	**225103230**	-	
DERBI								
Atlantis	50	1999	1999	**225100080**	**225100083**	-	-	
Atlantis 4T	50	2004	2004	**225100080**	**225100083**	-	-	
Atlantis Bullet	50	2004	2004	**225100080**	**225100083**	-	-	
Atlantis H2O	50	2001	2001	**225100080**	**225100083**	-	-	
Atlantis H2O Wave	50	2001	2001	**225100080**	**225100083**	-	-	
Atlantis Wave	50	2001	2001	**225100080**	**225100083**	-	-	
Aventura	50	1996	1996	**225100080**	**225100083**	-	-	
Black Devil	50	2004	2004	**225100360**	**225100363**	**225100080**	**225100083**	
Boulevard	50	2009	2009	**225102620**	**225102623**	-	-	
DRD Pro corse	50	2006	2006	**225103160**	**225103163**	**225100080**	**225100083**	
DRD Racing R	50	2005	2005	**225100360**	**225100363**	**225100080**	**225100083**	
DRD Racing R Ltd.	50	2005	2005	**225100360**	**225100363**	**225100080**	**225100083**	
DRD Racing SM	50	2005	2005	**225100360**	**225100363**	**225100080**	**225100083**	
DRD Racing SM Ltd.	50	2005	2005	**225100360**	**225100363**	**225100080**	**225100083**	
DS	50	1988	1988	**225100080**	**225100083**	-	-	
Easy	50	1996	1996	**225100010**	**225100013**	-	-	
FDX	50	1989	1989	**225100080**	**225100083**	-	-	
Fenix	50	1994	1994	**225100080**	**225100083**	**225100080**	**225100083**	
Furax	50	1996	1996	**225100080**	**225100083**	**225100080**	**225100083**	
GP	50	2001	2001	**225100080**	**225100083**	-	-	
GP1	50	2001	2001	**225100080**	**225100083**	**225100080**	**225100083**	
GP1	50	2005	2005	**225100490**	**225100493**	**225100080**	**225100083**	
GPR Nude	50	2004	2004	**225100490**	**225100493**	**225100080**	**225100083**	
GPR R	50	1998	1998	**225100740**	-	**225100080**	**225100083**	
GPR Racing	50	2004	2004	**225100490**	**225100493**	**225100080**	**225100083**	
GPX1	50	2006	2006	**225103160**	**225103163**	**225100080**	**225100083**	
Hunter	50	1997	1997	**225100080**	**225100083**	**225120130**	-	
Hunter	50	1997	1997	**225100080**	**225100083**	**225120131**	-	
Manhattan	50	1999	1999	**225100080**	**225100083**	-	-	
Predator LC	50	1999	1999	**225100080**	**225100083**	**225100080**	**225100083**	
Predator O2	50	2000	2000	**225100080**	**225100083**	**225100080**	**225100083**	
Rambla	50	2006	2006	**225100080**	**225100083**	**225100080**	**225100083**	
Savannah	50	1991	1991	**225100080**	**225100083**	-	-	
Senda DRD Pro SM	50	2005	2005	**225100490**	**225100493**	**225102810**	-	
Senda L	50	1999	1999	**225100080**	**225100083**	**225100080**	**225100083**	
Senda R DRD	50	2003	2004	**225100740**	-	**225100080**	**225100083**	
Senda R, X-Treme	50	1994	2004	**225100080**	**225100083**	**225100080**	**225100083**	
Senda SM DRD	50	2003	2004	**225100080**	**225100083**	**225100080**	**225100083**	
Senda SM, X-Treme	50	1999	1999	**225100080**	**225100083**	**225100080**	**225100083**	
Sonar	50	2010	2010	**225100300**	**225100303**	-	-	
ST Paddock	50	1996	1996	**225100080**	**225100083**	-	-	
Stinger	50	1996	1996	**225100080**	**225100083**	-	-	
Vamos FL	50	1995	1995	**225100080**	**225100083**	-	-	

Modello *Model*	**CC**	**Da** *From*	**A** *To*	RMS YOUR BEST PARTNER **Anteriore Organica** *Front Organic*	SINTER **Anteriore Sinterizzata** *Front Sintered*	RMS YOUR BEST PARTNER **Posteriore Organica** *Rear Organic*	SINTER **Posteriore Sinterizzata** *Rear Sintered*	**Note** *Notes*
Vamos L	50	1995	1995	**225100080**	**225100083**	-	-	
Vamos R	50	1995	1995	**225100080**	**225100083**	**225120130**	-	Impianto AJP | *AJP Caliper*
Vamos R	50	1995	1995	**225100080**	**225100083**	**225120131**	-	Impianto AJP | *AJP Caliper*
Vamos R	50	1995	1995	**225100190**	**225100193**	**225120130**	-	Impianto Brembo | *Brembo Caliper*
Vamos R	50	1995	1995	**225100190**	**225100193**	**225120131**	-	Impianto Brembo | *Brembo Caliper*
Variant Sport-R	50	2001	2001	**225100080**	**225100083**	-	-	
X-Race R	50	2005	2005	**225100080**	**225100083**	**225100080**	**225100083**	
X-Treme R	50	2005	2005	**225100080**	**225100083**	**225100080**	**225100083**	
GPR	75	1989	1989	**225100070**	-	**225100080**	**225100083**	
GPR Sport	75	-	-	**225100070**	-	**225100080**	**225100083**	
Sport, Coppa	75	1984	1984	**225100080**	**225100083**	-	-	
GPR Cup	80	2004	2004	**225103160**	**225103163**	**225100080**	**225100083**	
Atlantis 4T	100	2004	2004	**225100080**	**225100083**	-	-	
Atlantis O2/H2O	100	2001	2001	**225100080**	**225100083**	-	-	
Atmosphere	125	1999	1999	**225100740**	-	-	-	
Boulevard	125	2003	2003	**225102810**	-	**225120421**	-	
GP1	125	2005	2005	**225100490**	**225100493**	**225100080**	**225100083**	
GPR	125	2005	2005	**225103160**	**225103163**	**225100080**	**225100083**	
GPR Nude	125	2005	2005	**225103160**	**225103163**	**225100080**	**225100083**	
GPR Racing	125	2009	2009	**225103160**	**225103163**	**225100080**	**225100083**	
Mulhacen	125	2007	2007	**225100360**	**225100363**	**225100010**	**225100013**	
Mulhacen	125	2008	2008	**225103340**	**225103343**	-	-	
Predator	125	1999	1999	**225100080**	**225100083**	-	-	
Rambla	125	2008	2008	**225100060**	**225100063**	**225100310**	**225100313**	
Senda Baja	125	2006	2006	**225100360**	**225100363**	**225102810**	-	
Senda DRD SM	125	2010	2010	**225100490**	**225100493**	-	-	
Senda R 4T	125	2004	2004	**225100360**	**225100363**	**225100080**	**225100083**	
Senda X-Treme SM 4T	125	2004	2004	**225100360**	**225100363**	**225100080**	**225100083**	
Terra	125	2007	2007	**225100080**	**225100083**	**225100010**	**225100013**	
Terra	125	2008	2008	**225103340**	**225103343**	-	-	
Terra Adventure	125	2008	2008	**225103340**	**225103343**	-	-	
Boulevard	150	2003	2003	**225102810**	-	**225120421**	-	
Predator	180	1999	1999	**225100740**	-	-	-	
DXR Quad (Front disc)	200	2004	2004	**225100040**	-	**225101200**	-	
DXR Quad (Front drum)	200	2004	2004	**225120061**	-	**225101200**	-	
DXR Quad (Front drum)	200	2004	2004	**225120061**	-	**225101420**	**225101423**	
DXR Quad (Front disc)	250	2004	2004	**225100040**	-	**225101200**	-	
DXR Quad (Front drum)	250	2004	2004	-	-	**225101200**	-	
DXR Quad (Front drum)	250	2004	2004	-	-	**225101420**	**225101423**	
GP1	250	2005	2005	**225100490**	**225100493**	**225100450**	**225100453**	
RC	250	1985	1985	**225100010**	**225100013**	-	-	
Rambla	300	2008	2008	**225100060**	**225100063**	**225100310**	**225100313**	
Mulhacen	659	2005	2005	-	**225102983**	**225100490**	**225100493**	
Mulhacen	659	2006	2007	**225102860**	**225102863**	**225100490**	**225100493**	
Mulhacen Cafe	659	2008	2008	**225102860**	**225102863**	**225100490**	**225100493**	
DUCATI								
Desmo	250	1977	1977	**225103150**	**225103153**	-	-	
350	350	1975	1975	**225100010**	**225100013**	-	-	
Desmo	350	1977	1977	**225103150**	**225103153**	-	-	
F3	350	1986	1986	**225100010**	**225100013**	**225100010**	**225100013**	
F3	350	1986	1986	**225103150**	**225103153**	**225103150**	**225103153**	
GTV	350	1977	1977	**225100010**	**225100013**	**225100010**	**225100013**	
Indiana	350	1986	1986	-	-	**225100010**	**225100013**	
Paso	350	1986	1986	**225100010**	**225100013**	**225100010**	**225100013**	

Modello *Model*	**CC**	**Da** *From*	**A** *To*	RMS YOUR BEST PARTNER **Anteriore Organica** *Front Organic*	SINTER **Anteriore Sinterizzata** *Front Sintered*	RMS YOUR BEST PARTNER **Posteriore Organica** *Rear Organic*	SINTER **Posteriore Sinterizzata** *Rear Sintered*	**Note** *Notes*
Sport	350	1977	1977	**225100010**	**225100013**	**225100010**	**225100013**	
Monster (Japan)	400	2001	2006	**225101100**	**225101103**	**225100010**	**225100013**	
Scrambler Sixty Two	400	2016	2016	**225101010**	**225101013**	**225101330**	**225101333**	
SS, Junior	400	1992	1997	**225100520**	**225100523**	**225100010**	**225100013**	
SS, Nuda	400	1992	1992	**225100520**	**225100523**	**225100010**	**225100013**	
GTV	500	1977	1977	**225100010**	**225100013**	**225100010**	**225100013**	
Pantah	500	1985	1985	**225100010**	**225100013**	**225100010**	**225100013**	
Sport	500	1977	1977	**225103150**	**225103153**	**225103150**	**225103153**	
Sport Desmo	500	1977	1977	**225100010**	**225100013**	-	-	
Twin GTL	500	1975	1975	**225100010**	**225100013**	-	-	
Single	502	1993	1993	**225100520**	**225100523**	**225100010**	**225100013**	
Supermono	502	1993	1993	**225100520**	**225100523**	**225100010**	**225100013**	
M Monster	600	1994	1999	**225100520**	**225100523**	**225100010**	**225100013**	
Monster	600	2000	2001	**225101100**	**225101103**	**225100010**	**225100013**	
Pantah TL, SL	600	-	-	**225103150**	**225103153**	**225103150**	**225103153**	
SL, TL Pantah	600	1976	1976	**225103150**	**225103153**	**225100010**	**225100013**	
SS Supersport	600	1995	2000	**225100520**	**225100523**	**225100010**	**225100013**	
Monster Dark i.e.	620	2002	2006	**225101100**	**225101103**	**225100010**	**225100013**	
Monster i.e., s i.e.	620	2002	2006	**225101100**	**225101103**	**225100010**	**225100013**	
Multistrada	620	2005	2006	**225100430**	-	**225100490**	**225100493**	
Multistrada Dark	620	2005	2006	**225101100**	**225101103**	**225100490**	**225100493**	
Sport	620	2003	2006	**225101100**	**225101103**	**225100490**	**225100493**	
Indiana	650	1986	1986	-	-	**225100010**	**225100013**	
Pantah	650	1984	1984	**225103150**	**225103153**	**225103150**	**225103153**	
Monster	695	2007	2012	**225100430**	-	**225100010**	**225100013**	
Monster	696	2008	2012	**225101100**	**225101103**	**225100490**	**225100493**	Pinza radiale | *Radial Caliper*
748 Biposto	748	1995	1998	**225100520**	**225100523**	**225100010**	**225100013**	
748 R	748	2000	2000	**225101100**	**225101103**	**225100010**	**225100013**	
748 R	748	2001	2002	**225102860**	**225102863**	**225100010**	**225100013**	
748 S	748	1999	2002	**225101100**	**225101103**	**225100010**	**225100013**	
748 SP	748	1995	1997	**225100520**	**225100523**	**225100010**	**225100013**	
748 SPS	748	1998	1999	**225101100**	**225101103**	**225100010**	**225100013**	
749 R	749	2004	2007	**225102860**	**225102863**	**225100490**	**225100493**	Pinza radiale | *Radial Caliper*
749 S	749	2003	2007	**225102860**	**225102863**	**225100490**	**225100493**	
F1	750	1986	1986	**225103150**	**225103153**	**225103150**	**225103153**	
GT	750	1974	1976	**225103150**	**225103153**	-	-	
Indiana	750	-	-	-	-	**225100010**	**225100013**	
Monster	750	1996	1999	**225100520**	**225100523**	**225100010**	**225100013**	
Monster	750	2000	2001	**225101100**	**225101103**	**225100010**	**225100013**	
Monster i.e.	750	2002	2002	**225101100**	**225101103**	**225100010**	**225100013**	
Paso	750	1986	1986	**225100010**	**225100013**	**225100010**	**225100013**	
Paso	750	1987	1987	**225103150**	**225103153**	**225100010**	**225100013**	
Paso	750	1988	1988	**225100010**	**225100013**	**225100010**	**225100013**	
Sport	750	1990	1990	**225103150**	**225103153**	**225103150**	**225103153**	
Sport	750	2000	2002	**225101100**	**225101103**	**225100490**	**225100493**	
SS	750	1974	1974	**225103150**	**225103153**	**225103150**	**225103153**	
SS	750	1991	1991	**225100520**	**225100523**	**225103150**	**225103153**	
SS Supersport	750	1995	1999	**225100520**	**225100523**	**225100010**	**225100013**	
SS, Carenara	750	1992	1992	**225100520**	**225100523**	**225100010**	**225100013**	
SS, Nuda	750	1992	1992	**225100520**	**225100523**	**225100010**	**225100013**	
Super Sport	750	1992	1994	**225100520**	**225100523**	**225100010**	**225100013**	
Super Sport	750	2000	2002	**225101100**	**225101103**	**225100490**	**225100493**	
Monster	795	2012	2012	**225101100**	**225101103**	**225100490**	**225100493**	
Hypermotard ABS	796	2010	2012	**225101100**	**225101103**	**225100490**	**225100493**	

Modello *Model*	**CC**	**Da** *From*	**A** *To*	RMS YOUR BEST PARTNER **Anteriore Organica** *Front Organic*	SINTER **Anteriore Sinterizzata** *Front Sintered*	RMS YOUR BEST PARTNER **Posteriore Organica** *Rear Organic*	SINTER **Posteriore Sinterizzata** *Rear Sintered*	**Note** *Notes*
Monster	796	2011	2014	**225101100**	**225101103**	**225100490**	**225100493**	Pinza radiale | *Radial Caliper*
Monster ABS	796	2011	2014	**225101100**	**225101103**	**225100490**	**225100493**	Pinza radiale | *Radial Caliper*
Monster	797	2017	2017	-	**225103193**	**225101330**	**225101333**	
Hypermotard	800	2013	2015	-	**225103193**	**225100490**	**225100493**	
Hypermotard ABS	800	2013	2015	-	**225103193**	**225100490**	**225100493**	
Hypermotard SP	800	2013	2015	-	**225103193**	**225100490**	**225100493**	
Hypermotard SP ABS	800	2013	2015	-	**225103193**	**225100490**	**225100493**	
Hyperstrada	800	2013	2015	-	**225103193**	**225100490**	**225100493**	
Hyperstrada ABS	800	2013	2015	-	**225103193**	**225100490**	**225100493**	
Monster Dark i.e., s i.e.	800	2003	2007	**225101100**	**225101103**	**225100010**	**225100013**	
Monster i.e., s i.e.	800	2003	2007	**225101100**	**225101103**	**225100010**	**225100013**	
Monster S2R	800	2005	2007	**225100430**	-	**225100010**	**225100013**	
Monster S2R ABS	800	2005	2007	**225100430**	-	**225100010**	**225100013**	
Scrambler Classic	800	2015	2015	-	**225103193**	**225101330**	**225101333**	
Scrambler Enduro	800	2015	2015	-	**225103193**	**225101330**	**225101333**	
Scrambler Flat Track Pro	800	2016	2016	-	**225103193**	**225101330**	**225101333**	
Scrambler Full Throttle	800	2015	2015	-	**225103193**	**225101330**	**225101333**	
Scrambler Icon	800	2015	2015	-	**225103193**	**225101330**	**225101333**	
Scrambler Urban Enduro	800	2016	2016	-	**225103193**	**225101330**	**225101333**	
Scrambler-X Desert Sled	800	2017	2017	-	**225103193**	**225101330**	**225101333**	
Sport	800	2003	2006	**225101100**	**225101103**	**225100490**	**225100493**	
Supersport	800	2003	2006	**225101100**	**225101103**	**225100490**	**225100493**	
Monster	821	2015	2015	-	**225103193**	**225100490**	**225100493**	
Monster Dark	821	2015	2015	-	**225103193**	**225100490**	**225100493**	
848	848	2008	2010	**225101100**	**225101103**	**225100490**	**225100493**	Pinza radiale | *Radial Caliper*
848 EVO	848	2011	2012	-	**225102923**	**225100490**	**225100493**	Pinza radiale | *Radial Caliper*
Streetfighter	848	2012	2012	**225101100**	**225101103**	**225100490**	**225100493**	
Streetfighter S	848	2012	2012	-	**225102923**	**225100490**	**225100493**	
Strada	851	1989	1989	**225100520**	**225100523**	**225100010**	**225100013**	
Strada	851	1991	1991	**225100520**	**225100523**	**225103150**	**225103153**	
Superbike	851	1990	1990	**225100520**	**225100523**	**225100010**	**225100013**	
GT	860	1975	1977	**225103150**	**225103153**	-	-	
GT	860	-	-	**225103150**	**225103153**	**225103150**	**225103153**	
Roche Replica	888	1991	1991	**225100520**	**225100523**	**225103150**	**225103153**	
SP V	888	1993	1993	**225100520**	**225100523**	**225100010**	**225100013**	
SP4	888	1992	1995	**225100520**	**225100523**	**225100010**	**225100013**	
SPO	888	-	-	**225100520**	**225100523**	**225100010**	**225100013**	
SPS	888	1992	1995	**225100520**	**225100523**	**225100010**	**225100013**	
Strada	888	1993	1993	**225100520**	**225100523**	**225100010**	**225100013**	
Superbike	888	1993	1993	**225100520**	**225100523**	**225100010**	**225100013**	
Panigale	899	2014	2015	-	**225103193**	**225100490**	**225100493**	
906 Paso	900	1989	1989	**225103150**	**225103153**	**225100010**	**225100013**	
907 I. E.	900	1990	1993	**225100520**	**225100523**	**225100010**	**225100013**	
FE	900	1997	1997	**225100520**	**225100523**	**225100010**	**225100013**	
GTS	900	1977	1977	**225103150**	**225103153**	-	-	
M Street Monster	900	1994	1999	**225100520**	**225100523**	**225100010**	**225100013**	
M, IL Monster	900	1993	1999	**225100520**	**225100523**	**225100010**	**225100013**	
MH	900	2000	2000	**225101100**	**225101103**	**225100010**	**225100013**	
Mike Hailwood Replica	900	1985	1985	**225103150**	**225103153**	**225103150**	**225103153**	
Monster	900	2000	2001	**225101100**	**225101103**	**225100010**	**225100013**	
Monster i.e.	900	2002	2002	**225101100**	**225101103**	**225100010**	**225100013**	
S2 Desmo	900	1985	1985	**225103150**	**225103153**	**225103150**	**225103153**	
SL	900	1992	1997	**225100520**	**225100523**	**225100010**	**225100013**	
Sport	900	1977	1977	**225103150**	**225103153**	**225103150**	**225103153**	

Modello *Model*	**CC**	**Da** *From*	**A** *To*	RMS YOUR BEST PARTNER **Anteriore Organica** *Front Organic*	SINTER **Anteriore Sinterizzata** *Front Sintered*	RMS YOUR BEST PARTNER **Posteriore Organica** *Rear Organic*	SINTER **Posteriore Sinterizzata** *Rear Sintered*	**Note** *Notes*
SS	900	1978	1989	**225103150**	**225103153**	**225103150**	**225103153**	
SS	900	1990	1994	**225100520**	**225100523**	**225100010**	**225100013**	
SS Supersport	900	1995	1997	**225100520**	**225100523**	**225100010**	**225100013**	
SSR	900	1992	1992	**225100520**	**225100523**	**225100010**	**225100013**	
Super Sport	900	1998	2002	**225101100**	**225101103**	**225100490**	**225100493**	
Biposto	916	1994	1994	**225100520**	**225100523**	**225100010**	**225100013**	
Monster S4	916	2001	2003	**225101100**	**225101103**	**225100010**	**225100013**	
Sport Touring 4	916	1999	2001	**225101100**	**225101103**	**225100490**	**225100493**	
SPS	916	1997	1998	**225101100**	**225101103**	**225100010**	**225100013**	
Hypermotard	939	2016	2016	-	**225103193**	**225100490**	**225100493**	
Hypermotard SP	939	2016	2016	-	**225103193**	**225100490**	**225100493**	
Hyperstrada	939	2016	2016	-	**225103193**	**225100490**	**225100493**	
SuperSport	939	2017	2017	-	**225103193**	**225100490**	**225100493**	
SuperSport S	939	2017	2017	-	**225103193**	**225100490**	**225100493**	
Sport Touring	944	1998	1998	**225101100**	**225101103**	**225100490**	**225100493**	
ST2	944	1997	1997	**225101100**	**225101103**	**225100490**	**225100493**	
Multistrada	950	2017	2017	-	**225103193**	**225100430**	-	
Panigale	959	2016	2016	-	**225103193**	**225100490**	**225100493**	
D16RR Desmosedici RR	990	2007	2008	-	**225102923**	**225100490**	**225100493**	
ST3	992	2004	2004	**225101100**	**225101103**	**225100490**	**225100493**	
ST3s ABS	992	2006	2006	**225101100**	**225101103**	**225100490**	**225100493**	
996 R	996	2001	2001	**225102860**	**225102863**	**225100010**	**225100013**	
Monster S4R	996	2004	2004	**225101100**	**225101103**	**225100010**	**225100013**	
SPS	996	1999	2001	**225101100**	**225101103**	**225100010**	**225100013**	
ST4s	996	2002	2006	**225101100**	**225101103**	**225100490**	**225100493**	
ST4s ABS	996	2003	2006	**225101100**	**225101103**	**225100490**	**225100493**	
998 R	998	2002	2002	**225102860**	**225102863**	**225100010**	**225100013**	
998 S	998	2002	2002	**225101100**	**225101103**	**225100010**	**225100013**	
Monster S4Rs	998	2006	2006	**225102860**	**225102863**	**225100490**	**225100493**	
999 R	999	2003	2007	**225102860**	**225102863**	**225100490**	**225100493**	Pinza radiale | *Radial Caliper*
999 S	999	2003	2007	**225102860**	**225102863**	**225100490**	**225100493**	
Monster S4R	999	2007	2007	**225102860**	**225102863**	**225100490**	**225100493**	
Monster S4RS	999	2007	2007	**225102860**	**225102863**	**225100490**	**225100493**	
Biposto	1000	2007	2007	**225101010**	**225101013**	**225101330**	**225101333**	
GT	1000	2005	2010	**225101010**	**225101013**	**225101330**	**225101333**	
GT Touring	1000	2009	2009	**225101010**	**225101013**	**225101330**	**225101333**	
Hypermotard	1000	2006	2006	**225102860**	**225102863**	**225100490**	**225100493**	
Mike Hailwood Replica	1000	1985	1985	**225103150**	**225103153**	**225103150**	**225103153**	
Mille Replica	1000	1984	1984	**225103150**	**225103153**	**225103150**	**225103153**	
Monster Dark i.e., s i.e.	1000	2003	2006	**225101100**	**225101103**	**225100010**	**225100013**	
Monster i.e., s i.e.	1000	2003	2006	**225101100**	**225101103**	**225100010**	**225100013**	
Monster S2R	1000	2006	2007	**225101100**	**225101103**	**225100490**	**225100493**	
Multistrada	1000	2007	2007	**225101100**	**225101103**	**225100490**	**225100493**	
Multistrada DS	1000	2003	2006	**225101100**	**225101103**	**225100490**	**225100493**	
Multistrada S DS	1000	2005	2005	**225101100**	**225101103**	**225100490**	**225100493**	
Paul Smart	1000	2005	2005	**225101010**	**225101013**	**225101330**	**225101333**	
S2 Desmo	1000	1985	1985	**225103150**	**225103153**	**225103150**	**225103153**	
Sport, Sport S	1000	2005	2009	**225101010**	**225101013**	**225101330**	**225101333**	
Supersport DS	1000	2003	2006	**225101100**	**225101103**	**225100490**	**225100493**	
1098	1098	2007	2008	-	**225102923**	**225100490**	**225100493**	Pinza radiale | *Radial Caliper*
1098 R	1098	2008	2008	-	**225102923**	**225100490**	**225100493**	Pinza radiale | *Radial Caliper*
1098 S	1098	2007	2008	-	**225102923**	**225100490**	**225100493**	Pinza radiale | *Radial Caliper*
R Bayliss LE	1098	2009	2009	-	**225102923**	**225100490**	**225100493**	Pinza radiale | *Radial Caliper*
Streetfighter	1098	2009	2009	-	**225102923**	**225100490**	**225100493**	Pinza radiale | *Radial Caliper*

Modello *Model*	**CC**	**Da** *From*	**A** *To*	**Anteriore Organica** *Front Organic*	**Anteriore Sinterizzata** *Front Sintered*	**Posteriore Organica** *Rear Organic*	**Posteriore Sinterizzata** *Rear Sintered*	**Note** *Notes*
Streetfighter S	1098	2009	2009	-	**225102923**	**225100490**	**225100493**	Pinza radiale | *Radial Caliper*
Hypermotard	1100	2007	2007	-	**225102923**	**225100490**	**225100493**	
Hypermotard EVO	1100	2010	2010	**225101100**	**225101103**	**225100490**	**225100493**	
Hypermotard EVO SP	1100	2010	2010	-	**225102923**	**225100490**	**225100493**	
Monster	1100	2009	2009	**225101100**	**225101103**	**225100490**	**225100493**	Pinza radiale | *Radial Caliper*
Monster ABS	1100	2009	2009	**225101100**	**225101103**	**225100490**	**225100493**	Pinza radiale | *Radial Caliper*
Monster EVO	1100	2011	2011	**225101100**	**225101103**	**225100490**	**225100493**	Pinza radiale | *Radial Caliper*
Monster EVO ABS	1100	2011	2011	**225101100**	**225101103**	**225100490**	**225100493**	Pinza radiale | *Radial Caliper*
Monster S	1100	2009	2009	**225101100**	**225101103**	**225100490**	**225100493**	Pinza radiale | *Radial Caliper*
Monster S ABS	1100	2009	2009	**225101100**	**225101103**	**225100490**	**225100493**	Pinza radiale | *Radial Caliper*
Multistrada	1100	2007	2009	**225101100**	**225101103**	**225100490**	**225100493**	
Multistrada S	1100	2007	2009	**225101100**	**225101103**	**225100490**	**225100493**	
1198	1198	2009	2009	-	**225102923**	**225100490**	**225100493**	Pinza radiale | *Radial Caliper*
1198 S	1198	2009	2009	-	**225102923**	**225100490**	**225100493**	Pinza radiale | *Radial Caliper*
1198 SP	1198	2011	2011	-	**225102923**	**225100490**	**225100493**	Pinza radiale | *Radial Caliper*
Panigale	1199	2012	2014	-	**225102923**	**225100490**	**225100493**	
Panigale R	1199	2013	2013	-	**225102923**	**225100490**	**225100493**	
Panigale S	1199	2012	2014	-	**225102923**	**225100490**	**225100493**	
Superleggera	1199	2014	2014	-	**225102923**	**225100490**	**225100493**	
Diavel	1200	2011	2011	-	**225102923**	**225101010**	**225101013**	
Diavel Strada	1200	2011	2011	-	**225102923**	**225101010**	**225101013**	
Monster	1200	2014	2016	-	**225103193**	**225100490**	**225100493**	
Monster	1200	2017	2017	-	**225103193**	**225100490**	**225100493**	
Monster R	1200	2016	2016	-	**225102923**	**225100490**	**225100493**	
Monster S	1200	2014	2016	-	**225102923**	**225100490**	**225100493**	
Monster S	1200	2017	2017	-	**225102923**	**225100490**	**225100493**	
Multistrada	1200	2010	2014	**225101100**	**225101103**	**225100490**	**225100493**	
Multistrada	1200	2015	2015	-	**225103193**	**225100430**	-	
Multistrada Enduro	1200	2016	2016	-	**225103193**	**225101010**	**225101013**	
Multistrada S	1200	2015	2015	-	**225102923**	**225100430**	-	
Multistrada S D-air	1200	2015	2015	-	**225102923**	**225100430**	-	
Multistrada S GT	1200	2012	2014	**225101100**	**225101103**	**225100490**	**225100493**	
Multistrada S Pikes Peak	1200	2011	2014	**225101100**	**225101103**	**225100490**	**225100493**	
Multistrada S Pikes Peak	1200	2016	2016	-	**225102923**	**225100430**	-	
Multistrada S Sport	1200	2010	2014	**225101100**	**225101103**	**225100490**	**225100493**	
Multistrada S Touring	1200	2010	2014	**225101100**	**225101103**	**225100490**	**225100493**	
Xdiavel	1200	2016	2016	-	**225102923**	**225101010**	**225101013**	
Xdiavel S	1200	2016	2016	-	**225102923**	**225101010**	**225101013**	
Panigale	1299	2015	2015	-	**225102923**	**225100490**	**225100493**	
Panigale R	1299	2015	2015	-	**225102923**	**225100490**	**225100493**	
Panigale S	1299	2015	2015	-	**225102923**	**225100490**	**225100493**	
Panigale S Anniversario	1299	2017	2017	-	**225102923**	**225100490**	**225100493**	
Superleggera	1299	2017	2017	-	**225102923**	**225100490**	**225100493**	
E-TON								
RXL Viper	150	2007	2007	-	-	**225103230**	-	
VXL Vector, ST Vector	250	2006	2006	**225100040**	-	**225103230**	-	
VTX Vortex, ST Vortex	300	2007	2007	**225100040**	-	**225103230**	-	
VXL Vector, ST Vector	300	2007	2007	**225100040**	-	**225103230**	-	
FACTORY								
Helix	50	2004	2004	-	-	**225100040**	-	
R12 Phantom Agua	50	2006	2006	**225100650**	-	**225100080**	**225100083**	
R14 Phantom Agua	50	2004	2004	**225100650**	-	**225100080**	**225100083**	
R14 Phantom Aire	50	2003	2003	**225100080**	**225100083**	-	-	
Rex	50	2004	2004	-	-	**225100040**	-	

Modello *Model*	**CC**	**Da** *From*	**A** *To*	**Anteriore Organica** *Front Organic*	**Anteriore Sinterizzata** *Front Sintered*	**Posteriore Organica** *Rear Organic*	**Posteriore Sinterizzata** *Rear Sintered*	**Note** *Notes*
RP Desert	50	2004	2004	**225100360**	**225100363**	**225100080**	**225100083**	
SM Chrono	50	2004	2004	**225100360**	**225100363**	**225100080**	**225100083**	
SP Chrono	50	2004	2004	**225100360**	**225100363**	**225100080**	**225100083**	
YR Desert	50	2004	2004	**225100360**	**225100363**	**225100080**	**225100083**	
R2 Phantom	65	2004	2004	**225100650**	-	**225100080**	**225100083**	
Helix	100	2004	2004	-	-	**225100040**	-	
Rex	100	2004	2004	-	-	**225100040**	-	
YR	125	2006	2006	**225102590**	**225102593**	**225100080**	**225100083**	
YR	250	1999	1999	**225100430**	-	**225101330**	**225101333**	
FANTIC								
Big Wheel	50	1993	1993	**225100180**	-	-	-	
Caballero Motard	50	2010	2010	-	-	**225100660**	**225100663**	
Caballero Regolarita	50	2010	2010	-	-	**225100660**	**225100663**	
Fast	50	-	-	**225100070**	-	-	-	
Grinta	50	1995	1995	**225100180**	-	-	-	
ISSIMO 50 (ruote raggi)	50	-	-	**225120190**	-	**225120190**	-	
Koala	50	1988	1988	**225100010**	**225100013**	**225100010**	**225100013**	
Leader	50	1995	1995	**225100180**	-	-	-	
MX Regolarna Competizione	50	2008	2008	**225100920**	**225100923**	**225102630**	**225102633**	
Oasis	50	1990	1990	**225100070**	-	-	-	
Pony	50	1993	1993	**225120061**	-	**225120061**	-	
Pony SR	50	1993	1993	**225100180**	-	**225120061**	-	
Queenie	50	1995	1995	**225100180**	-	**225120061**	-	
RC Caballero	50	1991	1991	**225100010**	**225100013**	**225100010**	**225100013**	
Regolarna Casa	50	2008	2008	**225100360**	**225100363**	**225100040**	-	
Regolarna Competizione	50	2008	2008	**225100920**	**225100923**	**225102630**	**225102633**	
RS Caballero	50	1991	1991	**225100010**	**225100013**	**225100010**	**225100013**	
SPRINTER 50	50	1984	-	**225120200**	-	**225120200**	-	
SPRINTER 50 3V. R (FM. 248)	50	1983	-	**225120200**	-	**225120200**	-	
Supersei Motard	50	2008	2008	**225100360**	**225100363**	**225100040**	-	
Trial	50	-	-	**225100030**	-	-	-	
Trial .5 .7 .9	50	1989	1989	**225100080**	**225100083**	**225100080**	**225100083**	
MX Regolarna Competizione	65	2008	2008	**225100920**	**225100923**	**225102630**	**225102633**	
Oasis	75	1989	1989	**225100070**	-	-	-	
Regolarna Competizione	80	2008	2008	**225100920**	**225100923**	**225102630**	**225102633**	
MX Regolarna Competizione	85	2008	2008	**225100920**	**225100923**	**225102630**	**225102633**	
Caballero Enduro 2T	125	2012	2012	**225100920**	**225100923**	**225100660**	**225100663**	
Caballero Motard 2T	125	2010	2010	**225100920**	**225100923**	**225100660**	**225100663**	
Caballero Motard 4T	125	2010	2010	-	-	**225100660**	**225100663**	
Caballero Regolarita 4T	125	2010	2010	-	-	**225100660**	**225100663**	
HP1 Strada	125	1985	1985	**225100030**	-	-	-	
Regolarna Casa	125	2008	2008	**225100360**	**225100363**	**225100040**	-	
Regolarna Competizione	125	2008	2008	**225100920**	**225100923**	**225102630**	**225102633**	
Supersei Motard	125	2008	2008	**225100360**	**225100363**	**225100040**	-	
Trial	125	-	-	**225100030**	-	-	-	
Trial Professional	125	1987	1987	**225100030**	-	**225100030**	-	
Trial Progress 1	125	1987	1987	**225100030**	-	-	-	
TZ SM	125	2012	2012	**225100520**	**225100523**	-	-	
Caballero Motard 4T	200	2010	2010	-	-	**225100660**	**225100663**	
Caballero Regolarita 4T	200	2010	2010	-	-	**225100660**	**225100663**	
Trial	201	-	-	**225100030**	-	-	-	
Trial Progress 2	201	1987	1987	**225100030**	-	-	-	
Trial Progress 2	241	1987	1987	**225100030**	-	-	-	
Trial	243	1987	1987	**225100030**	-	**225100030**	-	

Modello *Model*	**CC**	**Da** *From*	**A** *To*	RMS YOUR BEST PARTNER **Anteriore Organica** *Front Organic*	SINTER **Anteriore Sinterizzata** *Front Sintered*	RMS YOUR BEST PARTNER **Posteriore Organica** *Rear Organic*	SINTER **Posteriore Sinterizzata** *Rear Sintered*	**Note** *Notes*
Coach	250	1991	1991	**225100010**	**225100013**	-	-	
Enduro 4T	250	2016	2016	-	-	**225100660**	**225100663**	
K-Roo	250	1993	1993	**225100080**	**225100083**	**225100080**	**225100083**	
Raider	250	1985	1985	**225100060**	**225100063**	-	-	
Trial	301	1985	1985	**225100030**	-	-	-	
Trial Progress 2	301	1987	1987	**225100030**	-	-	-	
Trial Professional	303	1987	1987	**225100030**	-	**225100030**	-	
305	305	1989	1989	**225100080**	**225100083**	**225100080**	**225100083**	
Trial	307	1991	1991	**225100080**	**225100083**	**225100080**	**225100083**	
Trial Progress 2	343	1987	1987	**225100030**	-	**225100030**	-	
Caballero	500	2017	2017	-	**225103193**	**225101330**	**225101333**	
GARELLI								
BASIC 50 (ruota raggi)	50	-	-	**225120190**	-	**225120190**	-	
CPR	50	2002	2002	**225100180**	-	-	-	
EUREKA 50	50	-	-	**225120190**	-	**225120190**	-	
Flo'	50	2000	2000	**225100190**	**225100193**	-	-	
FX	50	2002	2002	**225100180**	-	-	-	
GSP	50	2012	2012	-	-	**225100080**	**225100083**	
GULP 50	50	-	-	**225120190**	-	**225120190**	-	
JUNIOR 50 TURISMO (ruota raggi)	50	-	-	**225120200**	-	**225120200**	-	
KRS	50	2002	2002	**225102750**	**225102753**	-	-	
NOI 50 (ruota raggi)	50	-	-	**225120190**	-	**225120190**	-	
NOI 50 MATIC	50	-	-	**225120190**	-	**225120190**	-	
PMX Rally	50	2000	2000	**225100180**	-	-	-	
PMX Sport	50	2000	2000	**225102750**	**225102753**	-	-	
Sahel	50	1991	1991	**225100070**	-	**225100080**	**225100083**	
SR Pony	50	1995	1995	**225100180**	-	-	-	
Starter	50	2002	2002	**225100180**	-	-	-	
SUPER VIP 50	50	-	-	**225120190**	-	**225120190**	-	
Tiger XLE	50	1986	1986	**225100010**	**225100013**	**225100010**	**225100013**	
VIP 50 (ruota raggi)	50	-	-	**225120190**	-	**225120190**	-	
Xo	50	2012	2012	-	-	**225100080**	**225100083**	
Flexi	125	2012	2012	**225102590**	**225102593**	-	-	
Freeland	125	2002	2002	**225102750**	**225102753**	-	-	
GTA	125	1983	1985	**225100010**	**225100013**	-	-	
GTA	125	-	-	**225100010**	**225100013**	**225100010**	**225100013**	
Joker 2	125	2002	2002	**225102590**	**225102593**	-	-	
Panther	125	2002	2002	**225103240**	-	**225100190**	**225100193**	
Raider	125	2002	2002	**225100040**	-	-	-	
Tiger XLE	125	1986	1986	**225100060**	**225100063**	-	-	
T-Rex	125	2000	2000	**225102750**	**225102753**	-	-	
Xo	125	2012	2012	**225102590**	**225102593**	**225102730**	-	
XR Tiger XRD	125	1985	1985	**225100010**	**225100013**	-	-	
Freeland	150	2002	2002	**225102750**	**225102753**	-	-	
Joker 2	150	2002	2002	**225102590**	**225102593**	-	-	
Panther	150	2002	2002	**225103240**	-	**225100190**	**225100193**	
Xo	150	2012	2012	**225102590**	**225102593**	**225102730**	-	
Xo	200	2012	2012	**225101420**	**225101423**	**225102730**	-	
Panther	250	2002	2002	**225103240**	-	**225100190**	**225100193**	
Trial	323	1986	1986	**225100030**	-	-	-	
GAS GAS								
EC Boy	50	2001	2001	**225100630**	-	**225100630**	-	
EC Rookie	50	2001	2004	**225100740**	-	-	-	
EC Rookie	50	2005	2005	**225100360**	**225100363**	-	-	

Modello *Model*	**CC**	**Da** *From*	**A** *To*	RMS YOUR BEST PARTNER **Anteriore Organica** *Front Organic*	SINTER **Anteriore Sinterizzata** *Front Sintered*	RMS YOUR BEST PARTNER **Posteriore Organica** *Rear Organic*	SINTER **Posteriore Sinterizzata** *Rear Sintered*	**Note** *Notes*
SM Rookie	50	2001	2001	**225100740**	-	-	-	
TXT Boy	50	2001	2001	**225100630**	-	**225100630**	-	
TXT Boy	50	2004	2004	**225100080**	**225100083**	**225100080**	**225100083**	
TXT Rookie	50	2002	2003	**225100630**	-	**225100630**	-	
Wild HP	50	2004	2004	**225100430**	-	**225100430**	-	
MC	65	2005	2005	**225100630**	-	**225100630**	-	
TXT Rookie	80	2002	2003	**225100630**	-	**225100630**	-	
Delta	125	1991	1991	**225100080**	**225100083**	-	-	
EC	125	1997	1999	**225100430**	-	**225101330**	**225101333**	
EC	125	2000	2000	**225100920**	**225100923**	**225102630**	**225102633**	
Enducross	125	1993	1993	**225100920**	**225100923**	**225101200**	-	
MC	125	2003	2003	**225100920**	**225100923**	**225102630**	**225102633**	
Pampera	125	1996	2003	**225100080**	**225100083**	**225100080**	**225100083**	
Pampera	125	2004	2004	**225100360**	**225100363**	**225100630**	-	
SM	125	2002	2002	**225100520**	**225100523**	**225102630**	**225102633**	
Trial	125	1991	1991	**225100080**	**225100083**	-	-	
TX Randone	125	2012	2012	**225100640**	-	**225100650**	-	
TXT	125	2004	2004	**225100640**	-	**225100650**	-	
TXT	125	2012	2012	-	**225103543**	**225100650**	-	Impianto Formula | *Formula Caliper*
TXT Pro Racing	125	2014	2014	-	-	**225100650**	-	
TXT Pro Replica	125	2013	2013	-	-	**225100650**	-	
EC	200	1999	1999	**225100430**	-	**225101330**	**225101333**	
EC	200	2000	2000	**225100920**	**225100923**	**225102630**	**225102633**	
EC	200	2017	2017	**225100920**	**225100923**	**225101450**	**225101453**	
EC Hobby	200	2007	2016	**225100920**	**225100923**	**225102630**	**225102633**	
Pampera	200	1999	1999	**225100080**	**225100083**	**225100080**	**225100083**	
TX	200	1997	1997	**225100080**	**225100083**	**225100080**	**225100083**	
TXT	200	2004	2004	**225100640**	-	**225100650**	-	
Wild HP	200	2008	2008	**225100430**	-	**225100430**	-	
Wild HP	240	2004	2004	**225100430**	-	**225100430**	-	
EC	250	1997	1999	**225100430**	-	**225101330**	**225101333**	
EC	250	2000	2011	**225100920**	**225100923**	**225102630**	**225102633**	
EC	250	2012	2016	**225100920**	**225100923**	**225101450**	**225101453**	
EC	250	2017	2017	**225100920**	**225100923**	**225101450**	**225101453**	
EC fse	250	2002	2002	**225100920**	**225100923**	**225102630**	**225102633**	
GT Contact	250	-	-	**225100080**	**225100083**	**225100080**	**225100083**	
MC	250	1997	1999	**225100430**	-	**225101330**	**225101333**	
MC	250	2000	2000	**225100920**	**225100923**	**225102630**	**225102633**	
Pampera	250	1996	1999	**225100080**	**225100083**	**225100080**	**225100083**	
Pampera	250	2002	2002	**225100360**	**225100363**	**225100630**	-	
SM	250	2002	2002	**225100520**	**225100523**	**225102630**	**225102633**	
Trial	250	1989	1989	**225100080**	**225100083**	**225100080**	**225100083**	
TXT	250	2004	2004	**225100640**	-	**225100650**	-	
TXT	250	2012	2012	-	**225103543**	**225100650**	-	Impianto Formula | *Formula Caliper*
TXT Pro Racing	250	2014	2014	-	-	**225100650**	-	
TXT Pro Replica	250	2013	2013	-	-	**225100650**	-	
Wild HP	250	2008	2008	**225100430**	-	**225100430**	-	
XC	250	2017	2017	**225100920**	**225100923**	**225101450**	**225101453**	
TX	270	1997	1997	**225100080**	**225100083**	**225100080**	**225100083**	
Pampera	280	2004	2004	**225100360**	**225100363**	**225100630**	-	
TXT	280	2004	2004	**225100640**	-	**225100650**	-	
TXT	280	2012	2012	-	**225103543**	**225100650**	-	Impianto Formula | *Formula Caliper*
TXT Pro Racing	280	2014	2014	-	-	**225100650**	-	
TXT Pro Replica	280	2013	2013	-	-	**225100650**	-	

Modello *Model*	**CC**	**Da** *From*	**A** *To*	RMS YOUR BEST PARTNER **Anteriore Organica** *Front Organic*	SINTER **Anteriore Sinterizzata** *Front Sintered*	RMS YOUR BEST PARTNER **Posteriore Organica** *Rear Organic*	SINTER **Posteriore Sinterizzata** *Rear Sintered*	**Note** *Notes*
EC	300	1999	1999	**225100430**	-	**225101330**	**225101333**	
EC	300	2000	2011	**225100920**	**225100923**	**225102630**	**225102633**	
EC	300	2012	2016	**225100920**	**225100923**	**225101450**	**225101453**	
EC	300	2017	2017	**225100920**	**225100923**	**225101450**	**225101453**	
TXT	300	2004	2004	**225100640**	-	**225100650**	-	
TXT	300	2012	2012	-	**225103543**	**225100650**	-	Impianto Formula | *Formula Caliper*
TXT Pro	300	2007	2007	**225100640**	-	**225100650**	-	
TXT Pro Racing	300	2014	2014	-	-	**225100650**	-	
TXT Pro Replica	300	2013	2013	-	-	**225100650**	-	
Wild HP	300	2003	2003	**225100430**	-	**225100430**	-	
TX	320	1997	1997	**225100080**	**225100083**	**225100080**	**225100083**	
Halley PXC	325	-	-	**225100080**	**225100083**	**225100080**	**225100083**	
GT Contact	327	-	-	**225100080**	**225100083**	**225100080**	**225100083**	
Trial	327	-	-	**225100080**	**225100083**	**225100080**	**225100083**	
Pampera	370	1996	1996	**225100080**	**225100083**	**225100080**	**225100083**	
EC fse	400	2002	2002	**225100920**	**225100923**	**225102630**	**225102633**	
Pampera	400	2006	2006	**225100920**	**225100923**	**225102630**	**225102633**	
SM fse	400	2002	2002	**225100520**	**225100523**	**225102630**	**225102633**	
EC fse	450	2003	2003	**225100920**	**225100923**	**225102630**	**225102633**	
EC FSR	450	2007	2016	**225100920**	**225100923**	**225102630**	**225102633**	
SM fse	450	2003	2006	**225100520**	**225100523**	**225102630**	**225102633**	
SM FSR	450	2007	2007	**225100520**	**225100523**	**225102630**	**225102633**	
Wild HP	450	2003	2003	**225100430**	-	**225100430**	-	
EC fsr	515	2008	2016	**225100920**	**225100923**	**225102630**	**225102633**	
Wild HP	515	2009	2009	**225100430**	-	**225100430**	-	
GENERIC								
Ideo	50	2006	2013	-	-	**225120061**	-	
Toxic	50	2007	2007	**225100360**	**225100363**	**225100190**	**225100193**	
Trigger SM	50	2006	2006	**225100360**	**225100363**	**225100190**	**225100193**	
Trigger SM Competition	50	2008	2008	**225100360**	**225100363**	**225100190**	**225100193**	
Trigger X	50	2006	2006	**225100360**	**225100363**	**225100190**	**225100193**	
Trigger X Competition	50	2008	2008	**225100360**	**225100363**	**225100190**	**225100193**	
XOR	50	2006	2013	-	-	**225120061**	-	
Zion	125	2008	2008	**225100580**	**225100583**	-	-	
GILERA								
503	50	1991	1991	**225100030**	-	**225100030**	-	
Bullit	50	1990	1990	**225100030**	-	-	-	
CB 1 50	50	-	-	**225120190**	-	-	-	
CB 1 50	50	-	-	-	-	**225120230**	-	
CBA 50	50	1986	-	**225120190**	-	-	-	
CBA 50	50	1986	-	-	-	**225120230**	-	
CBA 50	50	-	-	**225120190**	-	-	-	
CBA 50	50	-	-	-	-	**225120230**	-	
DNA	50	2001	2001	**225100360**	**225100363**	**225100190**	**225100193**	
DT Stalker	50	2001	2001	**225100190**	**225100193**	**225100300**	**225100303**	
Eaglet	50	1996	1996	-	-	**225120350**	-	
Eaglet	50	1997	1997	**225100190**	**225100193**	**225102800**	-	
Easy Moving	50	1996	1996	**225103500**	-	**225120301**	-	
ECO 50	50	-	-	**225120190**	-	-	-	
ECO 50	50	-	-	-	-	**225120230**	-	
GSM Supermotard	50	2001	2001	**225100080**	**225100083**	**225100080**	**225100083**	
H@k	50	1999	1999	**225100080**	**225100083**	**225100080**	**225100083**	
Ice	50	2002	2002	**225100190**	**225100193**	-	-	
NRG	50	1994	1994	**225100190**	**225100193**	**225120301**	-	

Modello *Model*	**CC**	**Da** *From*	**A** *To*	**Anteriore Organica** *Front Organic*	**Anteriore Sinterizzata** *Front Sintered*	**Posteriore Organica** *Rear Organic*	**Posteriore Sinterizzata** *Rear Sintered*	**Note** *Notes*
R	50	1996	1996	**225100030**	-	-	-	
Rally, R1	50	-	-	**225100010**	**225100013**	-	-	
RC Top Rally	50	1990	1990	**225100010**	**225100013**	**225100010**	**225100013**	
RCR	50	2004	2004	**225100080**	**225100083**	**225100080**	**225100083**	
Runner	50	1997	2005	**225100190**	**225100193**	**225120350**	-	
Runner PJ	50	2006	2006	**225102620**	**225102623**	**225100300**	**225100303**	
Runner SP	50	2006	2006	**225102620**	**225102623**	**225100300**	**225100303**	
Runner SP, Purejet	50	1998	2005	**225100190**	**225100193**	**225100300**	**225100303**	
Sioux	50	1992	1992	**225100010**	**225100013**	**225100010**	**225100013**	
SMT	50	2004	2004	**225100080**	**225100083**	**225100080**	**225100083**	
Stalker	50	1997	1997	**225100190**	**225100193**	**225100300**	**225100303**	
Storm	50	1994	1994	**225100190**	**225100193**	**225120301**	-	
TREND 50	50	1989	-	**225120200**	-	**225120230**	-	
Typhoon	50	1993	1995	**225100190**	**225100193**	**225120301**	-	
Typhoon	50	1996	1996	**225103500**	-	**225120360**	-	
Zulu	50	2001	2001	**225100080**	**225100083**	**225100080**	**225100083**	
Runner Malossi	70	1998	1998	**225100190**	**225100193**	-	-	
Typhoon	80	1995	1995	**225100190**	**225100193**	**225120301**	-	
Apache	125	1991	1991	-	-	**225102730**	-	
Arizona Hawk	125	1986	1986	**225100010**	**225100013**	-	-	
Cougar	125	1999	1999	**225100060**	**225100063**	-	-	
Crono	125	1992	1992	**225100530**	**225100533**	**225100010**	**225100013**	
CX	125	1991	1991	**225100530**	**225100533**	**225100010**	**225100013**	
DNA	125	2001	2001	**225100360**	**225100363**	**225100190**	**225100193**	
ER Rally	125	1987	1987	**225100060**	**225100063**	-	-	
Fast Bike	125	1988	1988	**225100060**	**225100063**	-	-	
Freestyle	125	1992	1992	**225100530**	**225100533**	**225100010**	**225100013**	
FX Runner	125	1997	1999	**225100740**	-	**225120421**	-	
FX Runner	125	2000	2000	**225100360**	**225100363**	**225100300**	**225100303**	Impianto Grimeca | *Grimeca Caliper*
FX Runner	125	2000	2000	**225102620**	**225102623**	**225100300**	**225100303**	Impianto Heng Tong | *Heng Tong Caliper*
FX Runner SP	125	2000	2000	**225100360**	**225100363**	**225100300**	**225100303**	Impianto Grimeca | *Grimeca Caliper*
FX Runner SP	125	2000	2000	**225102620**	**225102623**	**225100300**	**225100303**	Impianto Heng Tong | *Heng Tong Caliper*
GSM	125	2000	2000	**225100080**	**225100083**	**225100080**	**225100083**	
HX, HE	125	1983	1983	**225100010**	**225100013**	-	-	
KK, KR, KZ	125	1986	1986	**225100060**	**225100063**	**225100010**	**225100013**	
MX1, MRX, SP01	125	-	-	**225100530**	**225100533**	**225100010**	**225100013**	
MXR	125	1990	1990	**225100060**	**225100063**	**225100010**	**225100013**	
Nexus	125	2007	2007	**225102620**	**225102623**	**225102620**	**225102623**	
R1, R1S	125	1990	1990	**225100060**	**225100063**	**225100010**	**225100013**	
RC Top Rally	125	1990	1990	-	-	**225102730**	-	
RRT Nebraska	125	1987	1987	**225100060**	**225100063**	-	-	
RTX	125	1986	1986	**225100060**	**225100063**	-	-	
RX	125	1983	1983	**225100010**	**225100013**	-	-	
RX Arizona Hawk	125	1985	1985	**225100060**	**225100063**	-	-	
SC	125	2006	2006	**225103160**	**225103163**	**225100080**	**225100083**	
SP02	125	1990	1990	**225100530**	**225100533**	**225100010**	**225100013**	
ST Runner	125	2008	2011	**225102620**	**225102623**	**225100450**	**225100453**	
ST Runner	125	2012	2012	**225102620**	**225102623**	**225100300**	**225100303**	
Surfer	125	2000	2000	**225100080**	**225100083**	**225100080**	**225100083**	
Typhoon	125	1996	1996	**225103500**	-	**225120350**	-	
VX Runner 4T	125	2001	2001	**225100360**	**225100363**	**225100450**	**225100453**	Impianto Grimeca | *Grimeca Caliper*
VX Runner 4T	125	2001	2001	**225102620**	**225102623**	**225100450**	**225100453**	Impianto Heng Tong | *Heng Tong Caliper*
X1	125	1989	1989	**225100060**	**225100063**	-	-	
XR2	125	1990	1990	**225100060**	**225100063**	**225100010**	**225100013**	

Modello *Model*	**CC**	**Da** *From*	**A** *To*	RMS YOUR BEST PARTNER **Anteriore Organica** *Front Organic*	SINTER **Anteriore Sinterizzata** *Front Sintered*	RMS YOUR BEST PARTNER **Posteriore Organica** *Rear Organic*	SINTER **Posteriore Sinterizzata** *Rear Sintered*	**Note** *Notes*
FX Runner	150	1997	1997	**225100740**	-	**225120421**	-	
Mad Mud	175	2002	2002	**225100360**	**225100363**	**225100190**	**225100193**	
DNA	180	2001	2001	**225100360**	**225100363**	**225100190**	**225100193**	
FXR Runner	180	1997	1997	**225100740**	-	-	-	
FXR Runner	180	1998	1999	**225100360**	**225100363**	-	-	
FXR Runner	180	2000	2000	**225100360**	**225100363**	**225100300**	**225100303**	Impianto Grimeca | *Grimeca Caliper*
FXR Runner	180	2000	2000	**225102620**	**225102623**	**225100300**	**225100303**	Impianto Heng Tong | *Heng Tong Caliper*
FXR Runner SP	180	2000	2000	**225100360**	**225100363**	**225100300**	**225100303**	Impianto Grimeca | *Grimeca Caliper*
FXR Runner SP	180	2000	2000	**225102620**	**225102623**	**225100300**	**225100303**	Impianto Heng Tong | *Heng Tong Caliper*
VXR Runner	180	2001	2001	**225102620**	**225102623**	-	-	
VXR Runner 4T	180	2001	2001	**225100360**	**225100363**	**225100450**	**225100453**	Impianto Grimeca | *Grimeca Caliper*
VXR Runner 4T	180	2001	2001	**225102620**	**225102623**	**225100450**	**225100453**	Impianto Heng Tong | *Heng Tong Caliper*
Arizona Hawk	200	1985	1985	**225100060**	**225100063**	-	-	
ER	200	1987	1987	**225100060**	**225100063**	-	-	
Fast Bike	200	-	-	**225100060**	**225100063**	**225100010**	**225100013**	
FX Runner	200	1997	1998	**225100740**	-	**225120421**	-	
FX Runner SP	200	1998	1998	**225100360**	**225100363**	**225100300**	**225100303**	
RV	200	-	-	-	-	**225100010**	**225100013**	
RX	200	1983	1983	**225100010**	**225100013**	-	-	
ST Runner	200	2008	2008	**225102620**	**225102623**	**225100450**	**225100453**	
Stalker	200	1997	1997	**225100190**	**225100193**	**225100300**	**225100303**	
VXR Runner 4T	200	2001	2001	**225100360**	**225100363**	**225100450**	**225100453**	Impianto Grimeca | *Grimeca Caliper*
VXR Runner 4T	200	2001	2001	**225102620**	**225102623**	**225100450**	**225100453**	Impianto Heng Tong | *Heng Tong Caliper*
Arizona Hawk	250	1986	1986	**225100010**	**225100013**	-	-	
Arizona Rally	250	1986	1986	**225100010**	**225100013**	-	-	
Arizona Rally	250	-	-	**225100060**	**225100063**	**225100010**	**225100013**	
Nexus	250	2007	2007	**225102620**	**225102623**	**225102620**	**225102623**	
NGR	250	1985	1985	-	-	**225100010**	**225100013**	
Oregon Quad	250	2007	2007	**225102730**	-	**225100500**	-	
Dakota	350	-	-	**225100060**	**225100063**	-	-	
Saturno Bialbero	350	-	-	**225100520**	**225100523**	**225100010**	**225100013**	
XRT	350	1990	1990	**225100060**	**225100063**	**225100010**	**225100013**	
Dakota	500	1986	1986	**225100060**	**225100063**	-	-	
Nexus	500	2004	2004	**225100430**	-	**225100490**	**225100493**	
RC Fuoco ie	500	2008	2008	**225100300**	**225100303**	**225100780**	-	
Saturno Bialbero	500	1990	1990	**225100520**	**225100523**	**225100010**	**225100013**	
Saturno Piuma	500	1990	1990	**225100520**	**225100523**	**225100010**	**225100013**	
Nordwest	600	1991	1991	**225100530**	**225100533**	**225100010**	**225100013**	
RC	600	1988	1988	**225100060**	**225100063**	**225100010**	**225100013**	
RC Top Rally	600	1990	1990	-	-	**225102730**	-	
Supersport	600	2002	2002	**225102860**	**225102863**	**225100490**	**225100493**	
XRT	600	1989	1989	**225100060**	**225100063**	**225100010**	**225100013**	
GP	800	2008	2008	**225100430**	-	**225102620**	**225102623**	
HARLEY DAVIDSON								
XG Street	500	2014	2015	-	**225103403**	-	**225103403**	
XG Street	500	2016	2016	**225101010**	**225101013**	**225100430**	-	
XG Street	750	2014	2015	-	**225103403**	-	**225103403**	
XG Street	750	2016	2016	**225101010**	**225101013**	**225100430**	-	
XL C Sportster Custom	883	2004	2013	-	**225103383**	-	**225103393**	
XL L Sportster Low	883	2006	2013	-	**225103383**	-	**225103393**	
XL L Super Low	883	2011	2013	-	**225103383**	-	**225103393**	
XL L Super Low	883	2014	2014	-	-	**225103110**	**225103113**	
XL N Iron	883	2013	2013	-	**225103383**	-	**225103393**	
XL N Iron	883	2014	2014	-	-	**225103110**	**225103113**	

Modello *Model*	**CC**	**Da** *From*	**A** *To*	RMS YOUR BEST PARTNER **Anteriore Organica** *Front Organic*	SINTER **Anteriore Sinterizzata** *Front Sintered*	RMS YOUR BEST PARTNER **Posteriore Organica** *Rear Organic*	SINTER **Posteriore Sinterizzata** *Rear Sintered*	**Note** *Notes*
XL R Roadster	883	2010	2013	-	**225103383**	-	**225103393**	
XL R Roadster	883	2014	2014	-	-	**225103110**	**225103113**	
XL R Sportster	883	2000	2003	-	**225103373**	-	**225103373**	
XL Sportster	883	2004	2013	-	**225103383**	-	**225103393**	
XL Sportster Custom	883	2000	2003	-	**225103373**	-	**225103373**	
XL Sportster R	883	2005	2013	-	**225103383**	-	**225103393**	
XLH Sportster	883	2000	2003	-	**225103373**	-	**225103373**	
XLH Sportster Hugger	883	2000	2003	-	**225103373**	-	**225103373**	
VRSCA V-Rod	1130	2002	2005	-	**225103373**	-	**225103373**	
VRSCA V-Rod	1130	2006	2006	-	**225103423**	-	**225103423**	
VRSCB V-Rod	1130	2004	2004	-	**225103373**	-	**225103373**	
VRSCD Night Rod	1130	2006	2006	-	**225103423**	-	**225103423**	
VRSCR Street Rod	1130	2006	2006	-	**225103423**	-	**225103423**	
XL C Sportster Custom	1200	2004	2004	-	**225103383**	-	**225103393**	
XL C, CA, CB, CP Custom	1200	2014	2014	-	-	**225103110**	**225103113**	
XL CX	1200	2017	2017	-	-	**225103110**	**225103113**	
XL L Sportster Low	1200	2007	2007	-	**225103383**	-	**225103393**	
XL N Nightster	1200	2007	2007	-	**225103383**	-	**225103393**	
XL R Sportster Roadster	1200	2004	2004	-	**225103383**	-	**225103393**	
XL Sportster Custom	1200	2000	2003	-	**225103373**	-	**225103373**	
XL Sportster Sport	1200	2000	2003	-	**225103373**	-	**225103373**	
XL T Super Low	1200	2015	2015	-	-	**225103110**	**225103113**	
XL V Seventy-Two	1200	2011	2013	-	**225103383**	-	**225103393**	
XL V Seventy-Two	1200	2014	2014	-	-	**225103110**	**225103113**	
XL X Forty-Eight	1200	2011	2013	-	**225103383**	-	**225103393**	
XL X Forty-Eight	1200	2014	2014	-	-	**225103110**	**225103113**	
XLH Sportster	1200	2000	2003	-	**225103373**	-	**225103373**	
XR	1200	2008	2008	-	**225103413**	-	**225103393**	
XR X	1200	2010	2010	-	**225103413**	-	**225103393**	
VRSCAW V-Rod	1250	2008	2008	-	**225103423**	-	**225103423**	
VRSCDX Night Rod Special	1250	2008	2008	-	**225103423**	-	**225103423**	
VRSCF Muscle	1250	2009	2009	-	**225103423**	-	**225103423**	
VRSCX V-Rod	1250	2008	2008	-	**225103423**	-	**225103423**	
FLHR/I Road King	1450	2000	2006	-	**225103373**	-	**225103373**	
FLHRCI Road King Classic	1450	2000	2006	-	**225103373**	-	**225103373**	
FLHRS/I Road King Custom	1450	2004	2006	-	**225103373**	-	**225103373**	
FLHT/I Electra Glide Standard	1450	2000	2006	-	**225103373**	-	**225103373**	
FLHTC/I Electra Glide Classic	1450	2000	2006	-	**225103373**	-	**225103373**	
FLHTCUI Ultra Classic Electra Glide	1450	2000	2006	-	**225103373**	-	**225103373**	
FLHXI Street Glide	1450	2006	2006	-	**225103373**	-	**225103373**	
FLSTC Softail	1450	2006	2007	-	**225103373**	-	**225103373**	
FLSTC/I Heritage Softail Classic	1450	2000	2004	-	**225103373**	-	**225103373**	
FLSTCI Softail	1450	2006	2006	-	**225103373**	-	**225103373**	
FLSTF Fat Boy	1450	2006	2007	-	**225103373**	-	**225103373**	
FLSTF/I Fat Boy	1450	2000	2004	-	**225103373**	-	**225103373**	
FLSTFI Fat Boy	1450	2006	2006	-	**225103373**	-	**225103373**	
FLSTI Heritage Softail	1450	2006	2006	-	**225103373**	-	**225103363**	
FLSTN/I Softail Deluxe	1450	2006	2006	-	**225103373**	-	**225103373**	
FLSTS/I Heritage Springer	1450	2000	2003	-	-	-	**225103373**	
FLSTSC/I Springer Softail Classic	1450	2006	2006	-	-	-	**225103373**	
FLTR/I Road Glide Classic	1450	2000	2006	-	**225103373**	-	**225103373**	
FXD Dyna Super Glide	1450	2000	2003	-	**225103373**	-	**225103373**	
FXDBI Dyna Street Bob	1450	2006	2006	-	**225103373**	-	**225103373**	
FXDC/I Dyna Super Glide Custom	1450	2005	2006	-	**225103373**	-	**225103373**	

Modello *Model*	**CC**	**Da** *From*	**A** *To*	RMS YOUR BEST PARTNER **Anteriore Organica** *Front Organic*	SINTER **Anteriore Sinterizzata** *Front Sintered*	RMS YOUR BEST PARTNER **Posteriore Organica** *Rear Organic*	SINTER **Posteriore Sinterizzata** *Rear Sintered*	**Note** *Notes*
FXDI 35th Anniversary Super Glide	1450	2006	2006	-	**225103373**	-	**225103363**	
FXDI Dyna Super Glide	1450	2004	2007	-	**225103373**	-	**225103373**	
FXDL Dyna Low Rider	1450	2000	2003	-	**225103373**	-	**225103373**	
FXDLI Dyna Low Rider	1450	2004	2006	-	**225103373**	-	**225103373**	
FXDS Dyna Convertible	1450	2000	2002	-	**225103373**	-	**225103373**	
FXDWG Dyna Wide Glide	1450	2000	2003	-	**225103373**	-	**225103373**	
FXDWGI Dyna Wide Glide	1450	2004	2006	-	**225103373**	-	**225103373**	
FXDX Dyna Super Glide Sport	1450	2000	2003	-	**225103373**	-	**225103373**	
FXDXI Dyna Super Glide Sport	1450	2004	2006	-	**225103373**	-	**225103373**	
FXDXT Dyna Super Glide T-Sport	1450	2000	2003	-	**225103373**	-	**225103373**	
FXST/I Softail Standard	1450	2000	2005	-	**225103373**	-	**225103373**	
FXST/I Softail Standard	1450	2006	2006	-	**225103373**	-	**225103363**	
FXSTB/I Night Train	1450	2000	2005	-	**225103373**	-	**225103373**	
FXSTB/I Night Train	1450	2006	2006	-	**225103373**	-	**225103363**	
FXSTD/I Softail Deuce	1450	2000	2005	-	**225103373**	-	**225103373**	
FXSTD/I Softail Deuce	1450	2006	2006	-	**225103373**	-	**225103363**	
FXSTS/I Softail	1450	2005	2005	-	-	-	**225103373**	
FXSTS/I Softail	1450	2006	2006	-	-	-	**225103363**	
FXSTS/I Springer Softail	1450	2000	2004	-	-	-	**225103373**	
FLHR Road King	1584	2007	2007	-	**225103373**	-	**225103373**	
FLHR Road King	1584	2008	2010	-	**225103423**	-	**225103423**	
FLHRC Road King Classic	1584	2007	2007	-	**225103373**	-	**225103373**	
FLHRC Road King Classic	1584	2008	2008	-	**225103423**	-	**225103423**	
FLHRS Road King Custom	1584	2007	2007	-	**225103373**	-	**225103373**	
FLHT Electra Glide Standard	1584	2007	2007	-	**225103373**	-	**225103373**	
FLHT Electra Glide Standard	1584	2008	2008	-	**225103423**	-	**225103423**	
FLHTC Electra Glide Classic	1584	2007	2007	-	**225103373**	-	**225103373**	
FLHTC Electra Glide Classic	1584	2008	2008	-	**225103423**	-	**225103423**	
FLHTCi Ultra Electra Glide Classic	1584	2008	2008	-	**225103423**	-	**225103423**	
FLHTCU Ultra Classic Electra Glide	1584	2007	2010	-	**225103373**	-	**225103373**	
FLHTK Electra Glide Ultra LTD	1584	2010	2010	-	**225103423**	-	**225103423**	
FLHX Street Glide	1584	2007	2007	-	**225103373**	-	**225103373**	
FLHX Street Glide	1584	2008	2008	-	**225103423**	-	**225103423**	
FLSTC Heritage Softail Classic	1584	2007	2007	-	**225103373**	-	**225103363**	
FLSTC Heritage Softail Classic	1584	2008	2008	-	**225103433**	-	**225103353**	
FLSTF Fat Boy	1584	2007	2007	-	**225103373**	-	**225103363**	
FLSTF Fat Boy	1584	2008	2008	-	**225103433**	-	**225103353**	
FLSTFB Fat Boy Special	1584	2010	2010	-	**225103433**	-	**225103353**	
FLSTN Softail Deluxe	1584	2007	2007	-	**225103373**	-	**225103363**	
FLSTN Softail Deluxe	1584	2008	2008	-	**225103433**	-	**225103353**	
FLSTSC/I Softail	1584	2007	2007	-	-	-	**225103363**	
FLTR Road Glide	1584	2008	2008	-	**225103423**	-	**225103423**	
FLTRU Road Glide Ultra	1584	2011	2016	-	**225103423**	-	**225103423**	
FLTRX Road Glide Custom	1584	2010	2010	-	**225103423**	-	**225103423**	
FXCW Rocker	1584	2008	2008	-	**225103433**	-	**225103353**	
FXCWC Rocker C	1584	2008	2008	-	**225103433**	-	**225103353**	
FXD Dyna Super Glide	1584	2007	2007	-	**225103373**	-	**225103373**	
FXD Dyna Super Glide	1584	2008	2008	-	**225103433**	-	**225103353**	
FXDB Dyna Street Bob	1584	2007	2007	-	**225103373**	-	**225103373**	
FXDB Dyna Street Bob	1584	2008	2013	-	**225103433**	-	**225103353**	
FXDC Dyna Super Glide Custom	1584	2007	2007	-	**225103373**	-	**225103373**	
FXDC Dyna Super Glide Custom	1584	2008	2008	-	**225103433**	-	**225103353**	
FXDF Fat Bob	1584	2008	2008	-	**225103433**	-	**225103353**	
FXDL Dyna Low Rider	1584	2007	2007	-	**225103373**	-	**225103373**	

Modello *Model*	**CC**	**Da** *From*	**A** *To*	RMS YOUR BEST PARTNER **Anteriore Organica** *Front Organic*	SINTER **Anteriore Sinterizzata** *Front Sintered*	RMS YOUR BEST PARTNER **Posteriore Organica** *Rear Organic*	SINTER **Posteriore Sinterizzata** *Rear Sintered*	**Note** *Notes*
FXDL Dyna Low Rider	1584	2008	2008	-	**225103433**	-	**225103353**	
FXDWG Dyna Wide Glide	1584	2007	2007	-	**225103373**	-	**225103373**	
FXDWG Dyna Wide Glide	1584	2008	2008	-	**225103433**	-	**225103353**	
FXST Softail Standard	1584	2007	2007	-	**225103373**	-	**225103363**	
FXST Softail Standard	1584	2008	2014	-	**225103433**	-	**225103353**	
FXST Softail Standard	1584	2015	2015	-	**225103413**	-	**225103353**	
FXSTB Night Train	1584	2007	2007	-	**225103373**	-	**225103363**	
FXSTB Night Train	1584	2008	2008	-	**225103433**	-	**225103353**	
FXSTC Softail Custom	1584	2007	2007	-	**225103373**	-	**225103363**	
FXSTC Softail Custom	1584	2008	2008	-	**225103433**	-	**225103353**	
FXSTD Softail Deuce	1584	2007	2007	-	**225103373**	-	**225103363**	
FLD Switchback	1690	2012	2012	-	**225103433**	-	**225103353**	
FLHR Road King	1690	2011	2015	-	**225103423**	-	**225103423**	
FLHR Road King	1690	2016	2016	-	**225103423**	-	**225103423**	
FLHRC Road King Classic	1690	2011	2011	-	**225103433**	-	**225103353**	
FLHTC Electra Glide Classic	1690	2011	2011	-	**225103433**	-	**225103353**	
FLHTCU Ultra Classic Electra Glide	1690	2011	2016	-	**225103423**	-	**225103423**	
FLHTCUL Electra Glide Ultra Classic Low	1690	2015	2015	-	**225103423**	-	**225103423**	
FLHTCUTG 1690 Tri Glide Ultra Classic Trike	1690	2009	2013	-	**225103423**	-	-	
FLHTK Ultra Classic Electra Glide	1690	2010	2010	-	**225103423**	-	**225103423**	
FLHTK Ultra Electra Glide	1690	2011	2011	-	**225103433**	-	**225103353**	
FLHTKL Ultra Limited Low	1690	2015	2016	-	**225103423**	-	**225103423**	
FLHX Street Glide	1690	2011	2016	-	**225103423**	-	**225103423**	
FLHXS Street Glide Special	1690	2014	2016	-	**225103423**	-	**225103423**	
FLHXXX Street Glide Trike	1690	2010	2010	-	**225103423**	-	-	
FLS Softail Slim	1690	2012	2014	-	**225103433**	-	**225103353**	
FLS Softail Slim	1690	2015	2015	-	**225103413**	-	**225103353**	
FLS Softail Slim	1690	2016	2016	-	**225103413**	-	**225103353**	
FLSTC Heritage Softail Classic	1690	2012	2014	-	**225103433**	-	**225103353**	
FLSTC Heritage Softail Classic	1690	2015	2015	-	**225103413**	-	**225103353**	
FLSTF Fat Boy	1690	2012	2014	-	**225103433**	-	**225103353**	
FLSTF Fat Boy	1690	2015	2015	-	**225103413**	-	**225103353**	
FLSTF Fat Boy Special	1690	2012	2014	-	**225103433**	-	**225103353**	
FLSTFB Fat Boy	1690	2012	2014	-	**225103433**	-	**225103353**	
FLSTFB Fat Boy	1690	2015	2015	-	**225103413**	-	**225103353**	
FLSTN Softail Deluxe	1690	2012	2014	-	**225103433**	-	**225103353**	
FLSTN Softail Deluxe	1690	2015	2015	-	**225103413**	-	**225103353**	
FLTRX Road Glide	1690	2015	2016	-	**225103423**	-	**225103423**	
FLTRXS Road Glide Special	1690	2015	2016	-	**225103423**	-	**225103423**	
FXDB Dyna Street Bob	1690	2014	2014	-	**225103433**	-	**225103353**	
FXDBA Dyna Street Bob	1690	2013	2013	-	**225103433**	-	**225103353**	
FXDBB Dyna Street Bob	1690	2014	2014	-	**225103433**	-	**225103353**	
FXDBP Dyna Street Bob	1690	2013	2013	-	**225103433**	-	**225103353**	
FXDC Dyna Super Glide Custom	1690	2014	2014	-	**225103433**	-	**225103353**	
FXDF Dyna Wide Glide	1690	2012	2012	-	**225103433**	-	**225103353**	
FXDF Fat Bob	1690	2012	2012	-	**225103433**	-	**225103353**	
FXDL Dyna Low Rider	1690	2014	2014	-	**225103433**	-	**225103353**	
FXDLS Dyna Low Rider S	1690	2017	2017	-	**225103433**	-	**225103353**	
FXS Blackline	1690	2013	2013	-	**225103433**	-	**225103353**	
FXSB Breakout	1690	2014	2014	-	**225103433**	-	**225103353**	
FXSB Breakout	1690	2015	2015	-	**225103413**	-	**225103353**	
FLHR Road King	1750	2017	2017	-	**225103423**	-	**225103423**	
FLHRC Road King Classic	1750	2017	2017	-	**225103423**	-	**225103423**	
FLHTCU Ultra Classic Electra Glide	1750	2017	2017	-	**225103423**	-	**225103423**	

Modello *Model*	**CC**	**Da** *From*	**A** *To*	RMS YOUR BEST PARTNER **Anteriore Organica** *Front Organic*	SINTER **Anteriore Sinterizzata** *Front Sintered*	RMS YOUR BEST PARTNER **Posteriore Organica** *Rear Organic*	SINTER **Posteriore Sinterizzata** *Rear Sintered*	**Note** *Notes*
FLHTK Ultra Limited	1750	2017	2017	-	**225103423**	-	**225103423**	
FLHTKL Ultra Limited Low	1750	2017	2017	-	**225103423**	-	**225103423**	
FLHX Street Glide	1750	2017	2017	-	**225103423**	-	**225103423**	
FLHXS Street Glide Special	1750	2017	2017	-	**225103423**	-	**225103423**	
FLTRU Road Glide Ultra	1750	2017	2017	-	**225103423**	-	**225103423**	
FLTRX Road Glide	1750	2017	2017	-	**225103423**	-	**225103423**	
FLTRXS Road Glide Special	1750	2017	2017	-	**225103423**	-	**225103423**	
FLHRSE5 CVO Road King	1802	2014	2014	-	**225103423**	-	**225103423**	
FLHTKSE CVO Limited	1802	2014	2016	-	**225103423**	-	**225103423**	
FLHXSE CVO Street Glide	1802	2010	2016	-	**225103423**	-	**225103423**	
FLSS Softail Slim S	1802	2016	2016	-	**225103413**	-	**225103353**	
FLSTFBS Fat Boy S	1802	2016	2016	-	**225103413**	-	**225103353**	
FLSTNSE CVO Softail Deluxe	1802	2014	2014	-	**225103433**	-	**225103353**	
FLSTNSE CVO Softail Deluxe	1802	2015	2015	-	**225103413**	-	**225103353**	
FLTRUSE CVO Road Glide Ultra	1802	2011	2011	-	**225103423**	-	**225103423**	
FXSBSE CVO Breakout	1802	2013	2013	-	**225103433**	-	**225103353**	
FLHTKSE CVO Limited	1870	2017	2017	-	**225103423**	-	**225103423**	
FLHXSE CVO Street Glide	1870	2017	2017	-	**225103423**	-	**225103423**	
HERCULES								
Gipsy, Splinter, Reggae	50	1995	1995	**225100190**	**225100193**	-	-	
ATV	280	2007	2007	**225103070**	**225103073**	-	-	
ATV Sport	300	2007	2007	**225103070**	**225103073**	-	-	
HM								
CRE	50	1998	2001	-	-	**225102800**	-	
CRE	50	2006	2013	**225100360**	**225100363**	**225102630**	**225102633**	
CRE Baja	50	1997	2001	**225102800**	-	**225102800**	-	
CRE Six Comp.	50	2007	2012	-	-	**225101450**	**225101453**	
CRM Derapage Comp.	50	2007	2012	-	-	**225101450**	**225101453**	
CR Supermotard	125	2004	2006	**225100920**	**225100923**	**225100660**	**225100663**	
CRE Enduro	125	1995	2001	**225100920**	**225100923**	**225102630**	**225102633**	
CRE Enduro	125	2002	2006	**225100920**	**225100923**	**225100660**	**225100663**	
CRE Six Comp.	125	2010	2011	-	-	**225101450**	**225101453**	
CRE Supermotard	125	2003	2003	**225100920**	**225100923**	**225102630**	**225102633**	
CRM Derapage Comp. 2T	125	2011	2012	-	-	**225101450**	**225101453**	
CRM Derapage Comp. 4T	125	2011	2012	-	-	**225101450**	**225101453**	
CRM X Supermotard	125	2007	2007	-	-	**225100660**	**225100663**	
Supermotard	125	2000	2002	**225100920**	**225100923**	**225102630**	**225102633**	
CRE Enduro	250	1995	2001	**225100920**	**225100923**	**225102630**	**225102633**	
CRE Enduro	250	2002	2003	**225100920**	**225100923**	**225100660**	**225100663**	
CRE F Enduro	250	2004	2013	**225100920**	**225100923**	**225100660**	**225100663**	
CRE Supermotard	250	2003	2003	**225100920**	**225100923**	**225102630**	**225102633**	
CRE Supermotard	250	2004	2007	**225100920**	**225100923**	**225100660**	**225100663**	
CRE X Enduro	250	2004	2013	**225100920**	**225100923**	**225100660**	**225100663**	
CRF Supermotard	250	2004	2006	**225100920**	**225100923**	**225100660**	**225100663**	
CRM X Supermotard	250	2007	2013	-	-	**225100660**	**225100663**	
Supermotard	250	2000	2002	**225100920**	**225100923**	**225102630**	**225102633**	
CRE F Enduro	450	2002	2013	**225100920**	**225100923**	**225100660**	**225100663**	
CRE X Enduro	450	2004	2013	**225100920**	**225100923**	**225100660**	**225100663**	
CRF Supermotard	450	2002	2006	**225100920**	**225100923**	**225100660**	**225100663**	
CRM X Supermotard	450	2007	2013	-	-	**225100660**	**225100663**	
CRM X Supermotard	500	2007	2013	-	-	**225100660**	**225100663**	
HONDA								
CB Replica	50	1999	1999	-	-	**225102630**	**225102633**	
CRM	50	1988	1992	**225101440**	-	**225102630**	**225102633**	

Modello *Model*	**CC**	**Da** *From*	**A** *To*	RMS YOUR BEST PARTNER **Anteriore Organica** *Front Organic*	SINTER **Anteriore Sinterizzata** *Front Sintered*	RMS YOUR BEST PARTNER **Posteriore Organica** *Rear Organic*	SINTER **Posteriore Sinterizzata** *Rear Sintered*	**Note** *Notes*
CRM	50	1993	1996	**225103240**	-	**225102630**	**225102633**	
Formula	50	1994	1994	**225100190**	**225100193**	-	-	
Giorno	50	1992	1994	**225103240**	-	-	-	
GP Dio	50	1989	1990	**225103240**	-	-	-	
GP Dio	50	1991	1991	**225103240**	-	-	-	
HSC ZR, 01 Scooter	50	1992	1992	**225103240**	-	-	-	
Jazz	50	1992	1992	**225103240**	-	-	-	
MB S	50	1980	1982	**225101440**	-	-	-	
MBX	50	1980	1982	**225101440**	-	-	-	
MBX S	50	1983	1985	**225102590**	**225102593**	-	-	
MRX	50	1988	1988	**225101440**	-	-	-	
NS F, Aero	50	1988	1988	**225102590**	**225102593**	-	-	
NS-1	50	1991	1991	**225102590**	**225102593**	-	-	
NSC Vision	50	2010	2010	**225102780**	-	-	-	
NSR	50	1989	1990	**225102590**	**225102593**	-	-	
PA	50	1982	1983	-	-	-	-	
PC K1	50	1979	1979	-	-	-	-	
PK Walaroo DX-STD	50	1990	2001	**225120070**	-	**225120090**	-	
PK Walaroo DX-STD	50	1990	2001	**225120070**	-	**225120091**	-	
R Monkey	50	1988	1988	**225103440**	-	-	-	
SC 1-ZX	50	1992	1992	**225103240**	-	-	-	
SFX Sport	50	1996	1996	**225100190**	**225100193**	-	-	
SGX Sky DX	50	1997	1997	**225100190**	**225100193**	-	-	
SH City Express	50	1984	-	**225120090**	-	**225120080**	-	
SH City Express	50	1984	-	**225120091**	-	**225120080**	-	
SH Fifty, Scoopy	50	2000	2000	**225100190**	**225100193**	-	-	
SH Scoopy	50	1988	1994	**225120080**	-	**225120080**	-	
SH T	50	1997	1997	**225100190**	**225100193**	-	-	
Sky Classic	50	2000	2000	**225100190**	**225100193**	-	-	
Sky Vetro	50	2000	2000	**225100190**	**225100193**	-	-	
SP	50	1991	1991	**225101440**	-	-	-	
SP	50	1992	1992	**225103240**	-	-	-	
SR Dio	50	1993	1993	**225103240**	-	-	-	
SR Super Dio	50	1991	1992	**225103240**	-	-	-	
SRX Shadow	50	1998	1998	**225102630**	**225102633**	-	-	
SXR	50	1998	1998	**225100190**	**225100193**	-	-	
SZX X8R-S	50	1998	1998	**225100190**	**225100193**	-	-	
SZX X8R-X	50	1998	1998	**225100190**	**225100193**	-	-	
Tact S	50	1993	1993	**225103240**	-	-	-	
ZX Super Dio	50	1992	1992	**225103240**	-	-	-	
CRM R	75	1990	1994	-	-	**225102630**	**225102633**	
NS-1	75	1992	1992	**225100350**	**225100353**	**225102630**	**225102633**	
NSR FII	75	1988	2000	**225102590**	**225102593**	-	-	
Yupy	75	1990	1990	**225102630**	**225102633**	-	-	
CB	80	1980	1981	**225101440**	-	-	-	
CR R	80	1986	1991	**225102850**	**225102853**	-	-	
CR R, RB	80	1992	2002	**225102850**	**225102853**	**225102630**	**225102633**	
CRM	80	1989	1989	**225102850**	**225102853**	**225102630**	**225102633**	
MB	80	1980	1980	**225102800**	-	-	-	
MBX	80	1983	1986	**225102590**	**225102593**	-	-	
MBX	80	1986	1986	**225102650**	**225102653**	-	-	
MBX DX	80	1982	1982	**225102590**	**225102593**	-	-	
MBX FWD	80	1983	1986	**225101440**	-	-	-	
MBX SW, SWD	80	1983	1983	**225102590**	**225102593**	-	-	

Modello *Model*	**CC**	**Da** *From*	**A** *To*	RMS YOUR BEST PARTNER **Anteriore Organica** *Front Organic*	SINTER **Anteriore Sinterizzata** *Front Sintered*	RMS YOUR BEST PARTNER **Posteriore Organica** *Rear Organic*	SINTER **Posteriore Sinterizzata** *Rear Sintered*	**Note** *Notes*
MCX	80	1982	1982	**225102800**	-	-	-	
MTX R	80	1987	1987	**225102650**	**225102653**	-	-	
NH Lead Scooter	80	1986	1986	**225103440**	-	-	-	
NSR R	80	1987	1992	**225102590**	**225102593**	**225102630**	**225102633**	
NSR R	80	1993	1993	**225100350**	**225100353**	**225102630**	**225102633**	
R Lead	80	1988	1988	**225103440**	-	-	-	
CR R, R Expert	85	2003	2003	**225102850**	**225102853**	**225102630**	**225102633**	
NH Yupy	90	1990	1994	**225102630**	**225102633**	-	-	
SRX Shadow	90	1999	1999	**225102630**	**225102633**	-	-	
Lead	100	2000	2000	**225102650**	**225102653**	-	-	
NSF	100	2006	2006	**225100350**	**225100353**	**225102630**	**225102633**	
NHX	110	2008	2009	**225100270**	**225100273**	-	-	
NHX	110	2010	2010	**225102650**	**225102653**	-	-	
NSC Vision	110	2010	2012	**225102780**	-	-	-	
SCV Lead	110	2008	2009	**225100270**	**225100273**	-	-	
SCV Lead	110	2010	2012	**225102780**	-	-	-	
ANF i Innova	125	2007	2011	**225102820**	**225102823**	-	-	
ANF Innova	125	2003	2006	**225102820**	**225102823**	-	-	
CA Rebel	125	1995	1996	**225100580**	**225100583**	-	-	
CA Rebel	125	1997	1997	**225100060**	**225100063**	-	-	
CB F	125	2015	2015	**225101070**	**225101073**	-	-	
CB RS	125	1983	1983	**225101440**	-	-	-	
CB TDC	125	1983	1989	**225103580**	**225103583**	-	-	
CB TDC	125	1983	1989	**225100330***	-	-	-	* = Pastiglia non omologata | ** = Not homologated brake pad*
CB TT	125	1990	1990	**225103170**	**225103173**	-	-	
CBF	125	2009	2009	**225102820**	**225102823**	-	-	
CBR R	125	2003	2010	**225102820**	**225102823**	-	-	
CBR R	125	2011	2014	**225102820**	**225102823**	**225103280**	**225103283**	
CBX Custom	125	1988	1988	**225102590**	**225102593**	-	-	
CG	125	2004	2004	**225101440**	-	-	-	
CH Spacy	125	1994	1994	**225100270**	**225100273**	-	-	
CLR Cityfly	125	1999	2003	**225100060**	**225100063**	-	-	
CR R	125	1995	2001	**225100920**	**225100923**	**225102630**	**225102633**	
CR R	125	2002	2007	**225100920**	**225100923**	**225100660**	**225100663**	
CR RE, RF	125	1984	1985	**225102650**	**225102653**	-	-	
CR RG	125	1986	1986	**225102650**	**225102653**	-	-	
CR RH, RJ, RK	125	1987	1994	-	-	**225102630**	**225102633**	
CRE	125	2002	2007	**225100920**	**225100923**	**225100660**	**225100663**	
CRE RR	125	2011	2011	**225103340**	**225103343**	**225100660**	**225100663**	
CRF F	125	2014	2014	**225100920**	**225100923**	-	-	
CRM ,R	125	1990	1998	**225100060**	**225100063**	**225102020**	-	
FES Pantheon	125	1998	2002	**225100340**	**225100343**	**225120410**	-	
FES Pantheon	125	2003	2006	**225100340**	**225100343**	**225102610**	**225102613**	
FES S-Wing	125	2007	2011	**225102540**	**225102543**	**225102560**	**225102563**	
FES S-Wing	125	2007	2011	**225102540**	**225102543**	**225102570***	-	Posteriore con piastra | *Rear with plate* * = Pastiglia non omologata | ** = Not homologated brake pad*
FES S-Wing	125	2007	2011	**225102550***	-	**225102560**	**225102563**	Anteriore con piastra | *Front with plate* * = Pastiglia non omologata | ** = Not homologated brake pad*
FES S-Wing	125	2007	2011	**225102550***	-	**225102570***	-	Anteriore-Posteriore con piastra | *Front-Rear with plate* * = Pastiglia non omologata | ** = Not homologated brake pad*
FS Sonic	125	2003	2003	**225102590**	**225102593**	-	-	

Modello *Model*	**CC**	**Da** *From*	**A** *To*	RMS YOUR BEST PARTNER **Anteriore Organica** *Front Organic*	SINTER **Anteriore Sinterizzata** *Front Sintered*	RMS YOUR BEST PARTNER **Posteriore Organica** *Rear Organic*	SINTER **Posteriore Sinterizzata** *Rear Sintered*	**Note** *Notes*
MBX RWB	125	1984	1984	**225102590**	**225102593**	-	-	
MSX	125	2014	2014	**225102820**	**225102823**	**225103280**	**225103283**	
MTX Camel, Italy	125	1988	1988	**225100060**	**225100063**	-	-	
MTX R	125	1984	1995	**225102650**	**225102653**	-	-	
MTX R, Italy	125	1986	1986	**225100060**	**225100063**	-	-	
NES @	125	2001	2006	**225102650**	**225102653**	**225120470**	-	
NES @	125	2001	2006	**225102650**	**225102653**	**225120471**	-	
NS	125	1989	1989	-	**225103103**	**225103440**	-	
NS	125	1989		**225103250**	**225103253**	-	-	
NS Italy	125	1985	1988	**225100060**	**225100063**	-	-	
NSR F	125	1988	1989	**225102650**	**225102653**	-	-	
NSR F, R	125	1990	1992	**225100060**	**225100063**	**225102020**	-	
NSR R, Italy	125	1989	1989	**225100060**	**225100063**	**225102020**	-	
NSS Forza	125	2015	2015	**225100870**	**225100873**	**225102560**	**225102563**	
NSS Forza	125	2015	2015	**225100870**	**225100873**	**225102570***	-	Posteriore con piastra | *Rear with plate* * = Pastiglia non omologata | ** = Not homologated brake pad*
NX , Transcity	125	1990	1998	**225100060**	**225100063**	-	-	
PCX	125	2009	2009	**225102780**	-	**225120470**	-	
PCX	125	2009	2009	**225102780**	-	**225120471**	-	
PS i	125	2007	2013	**225100270**	**225100273**	**225120470**	-	
PS i	125	2007	2013	**225100270**	**225100273**	**225120471**	-	
R Lead	125	1988	1988	**225103440**	-	-	-	
RS	125	1995	1995	**225100520**	**225100523**	**225103440**	-	
RS R	125	1991	1994	**225100870**	**225100873**	**225103440**	-	
RTV NRS, Italy	125	1987	1987	**225100060**	**225100063**	-	-	
SES Dylan	125	2002	2007	**225100270**	**225100273**	**225120470**	-	
SES Dylan	125	2002	2007	**225100270**	**225100273**	**225120471**	-	
SH	125	2002	2008	**225100270**	**225100273**	**225120470**	-	
SH	125	2002	2008	**225100270**	**225100273**	**225120471**	-	
SH	125	2013	2013	**225100870**	**225100873**	**225102560**	**225102563**	
SH	125	2013	2013	**225100870**	**225100873**	**225102570***	-	Posteriore con piastra | *Rear with plate* * = Pastiglia non omologata | ** = Not homologated brake pad*
SH i	125	2009	2012	**225102540**	**225102543**	**225102560**	**225102563**	
SH i	125	2009	2012	**225102540**	**225102543**	**225102570***	-	Posteriore con piastra | *Rear with plate* * = Pastiglia non omologata | ** = Not homologated brake pad*
SH i	125	2009	2012	**225102550***	-	**225102560**	**225102563**	Anteriore con piastra | *Front with plate* * = Pastiglia non omologata | ** = Not homologated brake pad*
SH i	125	2009	2012	**225102550***	-	**225102570***	-	Anteriore-Posteriore con piastra | *Front-Rear with plate* * = Pastiglia non omologata | ** = Not homologated brake pad*
VT C1 Shadow	125	1999	1999	**225100350**	**225100353**	-	-	
VT C2 Shadow	125	1999	1999	**225100350**	**225100353**	-	-	
XL R	125	1986	1986	**225102650**	**225102653**	-	-	
XL R, P.D., Italy	125	1985	1985	**225100060**	**225100063**	-	-	
XL R, P.D., Italy, EX	125	1987	1987	**225100060**	**225100063**	-	-	
XLR R	125	1998	1998	**225100920**	**225100923**	-	-	
XLV Varadero	125	2001	2001	**225100350**	**225100353**	-	-	
XR L	125	2003	2003	**225100920**	**225100923**	-	-	
CBR R	150	2000	2000	**225102820**	**225102823**	-	-	
CG	150	2004	2004	**225101440**	-	-	-	
CRF F	150	2003	2003	**225100920**	**225100923**	-	-	
CRF R	150	2007	2007	**225102850**	**225102853**	**225100660**	**225100663**	

Modello *Model*	**CC**	**Da** *From*	**A** *To*	RMS YOUR BEST PARTNER **Anteriore Organica** *Front Organic*	SINTER **Anteriore Sinterizzata** *Front Sintered*	RMS YOUR BEST PARTNER **Posteriore Organica** *Rear Organic*	SINTER **Posteriore Sinterizzata** *Rear Sintered*	**Note** *Notes*
FES Pantheon	150	1999	2002	**225100340**	**225100343**	**225120410**	-	
FES Pantheon	150	2003	2006	**225100340**	**225100343**	**225102610**	**225102613**	
FES S-Wing	150	2007	2011	**225102540**	**225102543**	**225102560**	**225102563**	
FES S-Wing	150	2007	2011	**225102540**	**225102543**	**225102570***	-	Posteriore con piastra | *Rear with plate* * = Pastiglia non omologata | * = *Not homologated brake pad*
FES S-Wing	150	2007	2011	**225102550***	-	**225102560**	**225102563**	Anteriore con piastra | *Front with plate* * = Pastiglia non omologata | * = *Not homologated brake pad*
FES S-Wing	150	2007	2011	**225102550***	-	**225102570***	-	Anteriore-Posteriore con piastra | *Front-Rear with plate* * = Pastiglia non omologata | * = *Not homologated brake pad*
NES @	150	2001	2006	**225102650**	**225102653**	**225120470**	-	
NES @	150	2001	2006	**225102650**	**225102653**	**225120471**	-	
NS	150	1992	1992	**225102630**	**225102633**	-	-	
NSR	150	2002	2002	**225100350**	**225100353**	**225101420**	**225101423**	
PCX	150	2012	2012	**225102780**	-	**225120470**	-	
PCX	150	2012	2012	**225102780**	-	**225120471**	-	
PS i	150	2007	2011	**225100270**	**225100273**	**225120470**	-	
PS i	150	2007	2011	**225100270**	**225100273**	**225120471**	-	
SES Dylan	150	2002	2006	**225100270**	**225100273**	**225120470**	-	
SES Dylan	150	2002	2006	**225100270**	**225100273**	**225120471**	-	
SH	150	2002	2008	**225100270**	**225100273**	**225120470**	-	
SH	150	2002	2008	**225100270**	**225100273**	**225120471**	-	
SH	150	2013	2013	**225100870**	**225100873**	**225102560**	**225102563**	
SH	150	2013	2013	**225100870**	**225100873**	**225102570***	-	Posteriore con piastra | *Rear with plate* * = Pastiglia non omologata | * = *Not homologated brake pad*
SH i	150	2009	2012	**225102540**	**225102543**	**225102560**	**225102563**	
SH i	150	2009	2012	**225102540**	**225102543**	**225102570***	-	Posteriore con piastra | *Rear with plate* * = Pastiglia non omologata | * = *Not homologated brake pad*
SH i	150	2009	2012	**225102550***	-	**225102560**	**225102563**	Anteriore con piastra | *Front with plate* * = Pastiglia non omologata | * = *Not homologated brake pad*
SH i	150	2009	2012	**225102550***	-	**225102570***	-	Anteriore-Posteriore con piastra | *Front-Rear with plate* * = Pastiglia non omologata | * = *Not homologated brake pad*
ATC X	200	1983	1985	**225102850**	**225102853**	**225102850**	**225102853**	
CTX	200	2004	2004	**225100920**	**225100923**	-	-	
MTX R	200	1985	1985	**225102650**	**225102653**	-	-	
XL R, P.D., Italy	200	1985	1985	**225100060**	**225100063**	-	-	
CRF	230	2004	2009	**225100920**	**225100923**	-	-	
CRF L	230	2008	2008	**225100920**	**225100923**	**225102630**	**225102633**	
CRF M	230	2009	2009	**225100920**	**225100923**	**225102630**	**225102633**	
SL	230	1997	2001	**225100920**	**225100923**	**225102630**	**225102633**	
ATC R	250	1981	1981	**225101440**	-	-	-	
ATC R	250	1982	1984	**225102850**	**225102853**	**225102850**	**225102853**	
ATC R	250	1985	1986	**225102650**	**225102653**	**225102650**	**225102653**	
ATC X	250	1985	1985	**225102650**	**225102653**	**225102850**	**225102853**	
CA Rebel	250	1990	1990	**225101070**	**225101073**	-	-	
CB	250	1988	1988	**225103170**	**225103173**	-	-	
CB	250	1992	2005	**225100870**	**225100873**	-	-	
CB N	250	1978	1978	**225100720**	**225100723**	-	-	
CB NA, NB, T, TZ	250	1977	1977	**225100720**	**225100723**	-	-	
CB Rebel	250	1986	1986	**225102590**	**225102593**	-	-	

Modello *Model*	**CC**	**Da** *From*	**A** *To*	**Anteriore Organica** *Front Organic*	**Anteriore Sinterizzata** *Front Sintered*	**Posteriore Organica** *Rear Organic*	**Posteriore Sinterizzata** *Rear Sintered*	**Note** *Notes*
CB RS	250	1980	1984	**225100720**	**225100723**	-	-	
CB RS	250	1985	1985	**225102650**	**225102653**	-	-	
CBF	250	2004	2004	**225100350**	**225100353**	-	-	
CBR Hurricane	250	1987	1987	-	-	**225102610**	**225102613**	
CBR Nighthawk	250	1992	1992	**225100870**	**225100873**	-	-	
CBR R	250	2011	2013	**225100870**	**225100873**	**225103520**	**225103323**	Impianto Nissin | *Nissin Caliper*
CBR R (Bybre cal)	250	2011	2011	**225101010**	**225101013**	**225101330**	**225101333**	
CBR R ABS	250	2011	2013	**225102540**	**225102543**	**225103520**	**225103323**	Impianto Nissin | *Nissin Caliper*
CBR R ABS	250	2011	2013	**225102550***	-	**225103520**	**225103323**	Anteriore con piastra , Impianto Nissin | *Front with plate, Nissin Caliper* * = Pastiglia non omologata | * *= Not homologated brake pad*
CBR R, RR	250	1990	1990	**225100870**	**225100873**	**225102610**	**225102613**	
CBR RJ	250	1988	1988	**225100870**	**225100873**	**225102610**	**225102613**	
CBX RSE	250	1984	1984	**225103580**	**225103583**	-	-	
CBX RSE	250	1984	1984	**225100330***	-	-	-	* = Pastiglia non omologata | * *= Not homologated brake pad*
CD UJ	250	1988	1992	**225103170**	**225103173**	-	-	
CH Spacy	250	1985	1986	**225102650**	**225102653**	-	-	
CH Spacy, Freeway Fusion	250	1988	1988	**225102650**	**225102653**	-	-	
CM TB	250	1981	1981	**225100720**	**225100723**	-	-	
CMX C Rebel	250	1996	1996	**225100580**	**225100583**	-	-	
CMX Rebel	250	1985	1985	**225102590**	**225102593**	-	-	
CN	250	1995	1999	-	-	**225120401**	-	
CN Helix	250	1986	1987	**225103580**	**225103583**	-	-	
CN Helix	250	1986	1987	**225100330***	-	-	-	* = Pastiglia non omologata | * *= Not homologated brake pad*
CN Helix (Fusion)	250	1993	1993	**225100870**	**225100873**	-	-	
CN Spazio	250	1988	1989	**225102650**	**225102653**	-	-	
Cota 4RT	250	2005	2013	**225100640**	-	**225100650**	-	
CR R	250	1987	1994	-	-	**225102630**	**225102633**	
CR R	250	1995	2001	**225100920**	**225100923**	**225102630**	**225102633**	
CR R	250	2002	2007	**225100920**	**225100923**	**225100660**	**225100663**	
CR RE, RF	250	1984	1985	**225102650**	**225102653**	-	-	
CR RG	250	1986	1986	**225102650**	**225102653**	-	-	
CRE	250	2002	2007	**225100920**	**225100923**	**225100660**	**225100663**	
CRE F	250	2004	2004	**225100920**	**225100923**	**225100660**	**225100663**	
CRF L	250	2013	2013	**225103340**	**225103343**	**225103280**	**225103283**	
CRF L ABS	250	2017	2017	**225103340**	**225103343**	**225103280**	**225103283**	
CRF M	250	2014	2014	**225103340**	**225103343**	**225103280**	**225103283**	
CRF R	250	2004	2009	**225100920**	**225100923**	**225100660**	**225100663**	
CRF R Efi	250	2010	2010	**225100920**	**225100923**	**225100660**	**225100663**	
CRF Rally	250	2017	2017	**225103340**	**225103343**	**225103280**	**225103283**	
CRF X	250	2004	2004	**225100920**	**225100923**	**225100660**	**225100663**	
FES Foresight	250	1998	1999	**225100970**	**225100973**	**225120410**	-	
FES Foresight	250	2000	2007	**225100970**	**225100973**	**225102610**	**225102613**	
FTR	250	1986	1986	**225102650**	**225102653**	**225102650**	**225102653**	
GB Clubman	250	1988	1988	**225103580**	**225103583**	-	-	
GB Clubman	250	1988	1988	**225100330***	-	-	-	* = Pastiglia non omologata | * *= Not homologated brake pad*
NS	250	1989	1989	-	**225103103**	**225103440**	-	
NS	250	1989		**225103250**	**225103253**	-	-	
NS R	250	1985	1985	-	-	**225103580**	**225103583**	
NS R	250	1985	1985	-	-	**225100330***	-	* = Pastiglia non omologata | * *= Not homologated brake pad*
NS R	250	1985		-	-	**225103580**	**225103583**	

Modello *Model*	**CC**	**Da** *From*	**A** *To*	RMS YOUR BEST PARTNER **Anteriore Organica** *Front Organic*	SINTER **Anteriore Sinterizzata** *Front Sintered*	RMS YOUR BEST PARTNER **Posteriore Organica** *Rear Organic*	SINTER **Posteriore Sinterizzata** *Rear Sintered*	**Note** *Notes*
NSR R	250	1987	1987	-	-	**225103580**	**225103583**	
NSR R	250	1987	1987	-	-	**225100330***	-	* = Pastiglia non omologata | * = *Not homologated brake pad*
NSR R	250	1987	-	-	-	**225103580**	**225103583**	
NSR R, SP	250	1990	1990	-	**225103103**	**225102610**	**225102613**	
NSR R, SP	250	1990		**225103250**	**225103253**	-	-	
NSR RJ	250	1988	1988	-	**225103103**	**225102610**	**225102613**	
NSS	250	2000	2004	**225100970**	**225100973**	**225100930**	**225100933**	
NSS	250	2005	2005	**225102540**	**225102543**	**225102560**	**225102563**	
NSS	250	2005	2005	**225102540**	**225102543**	**225102570***	-	Posteriore con piastra | *Rear with plate* * = Pastiglia non omologata | * = *Not homologated brake pad*
NSS	250	2005	2005	**225102550***	-	**225102560**	**225102563**	Anteriore con piastra | *Front with plate* * = Pastiglia non omologata | * = *Not homologated brake pad*
NSS	250	2005	2005	**225102550***	-	**225102570***	-	Anteriore-Posteriore con piastra | *Front-Rear with plate* * = Pastiglia non omologata | * = *Not homologated brake pad*
NSS Forza	250	2000	2004	**225100970**	**225100973**	**225100930**	**225100933**	
NSS Forza	250	2005	2013	**225102540**	**225102543**	**225102560**	**225102563**	
NSS Forza	250	2005	2013	**225102540**	**225102543**	**225102570***	-	Posteriore con piastra | *Rear with plate* * = Pastiglia non omologata | * = *Not homologated brake pad*
NSS Forza	250	2005	2013	**225102550***	-	**225102560**	**225102563**	Anteriore con piastra | *Front with plate* * = Pastiglia non omologata | * = *Not homologated brake pad*
NSS Forza	250	2005	2013	**225102550***	-	**225102570***	-	Anteriore-Posteriore con piastra | *Front-Rear with plate* * = Pastiglia non omologata | * = *Not homologated brake pad*
NSS Jazz	250	2001	2004	**225100970**	**225100973**	**225100930**	**225100933**	
PS	250	2005	2005	**225102540**	**225102543**	-	-	
PS	250	2005	2005	**225102550***	-	-	-	Anteriore con piastra | *Front with plate* * = Pastiglia non omologata | * = *Not homologated brake pad*
RS R	250	1991	1992	**225103250**	**225103253**	-	-	
RS R	250	1991	1992	-	**225103103**	**225102610**	**225102613**	
RS R	250	1993	1993	**225100520**	**225100523**	**225103440**	-	
Steed	250	1993	1993	**225100870**	**225100873**	-	-	
TRX EX Sportrax	250	2001	2008	**225102850**	**225102853**	-	-	
TRX R	250	1986	1989	-	-	**225102650**	**225102653**	
TRX X	250	2008	2008	**225102850**	**225102853**	-	-	
TRX X Fourtrax	250	1987	1987	-	-	**225102650**	**225102653**	
VT Spada	250	1989	1989	**225100870**	**225100873**	**225102610**	**225102613**	
VTR	250	1998	2002	**225102640**	**225102643**	**225102610**	**225102613**	
XL R	250	1984	1987	**225102650**	**225102653**	-	-	
XLR R	250	1988	1988	**225102650**	**225102653**	-	-	
XLR R SPL	250	1994	1994	**225100920**	**225100923**	**225102630**	**225102633**	
XR L	250	1991	1992	-	-	**225102630**	**225102633**	
XR L	250	1993	1997	**225100920**	**225100923**	**225102630**	**225102633**	
XR R	250	1984	1987	**225102650**	**225102653**	-	-	
XR R	250	1990	1995	-	-	**225102630**	**225102633**	
XR S, R	250	1996	1996	**225100920**	**225100923**	**225102630**	**225102633**	
Cota 4Ride	260	2016	2016	-	-	**225100650**	-	
Cota 4RT	260	2014	2014	**225100640**	-	**225100650**	-	
Cota 4RT Race Replica	260	2015	2015	-	-	**225100650**	-	
CB	300	2010	2010	**225100350**	**225100353**	-	-	
CBR F	300	2014	2014	**225102640**	**225102643**	**225103520**	**225103323**	

Modello *Model*	**CC**	**Da** *From*	**A** *To*	**Anteriore Organica** *Front Organic*	**Anteriore Sinterizzata** *Front Sintered*	**Posteriore Organica** *Rear Organic*	**Posteriore Sinterizzata** *Rear Sintered*	**Note** *Notes*
CBR R	300	2015	2015	**225102640**	**225102643**	**225103520**	**225103323**	
Cota RR	300	2016	2016	-	-	**225100650**	-	
NSS Forza	300	2014	2014	**225102540**	**225102543**	**225102560**	**225102563**	
NSS Forza	300	2014	2014	**225102540**	**225102543**	**225102570***	-	Posteriore con piastra | *Rear with plate* * = Pastiglia non omologata | * *= Not homologated brake pad*
NSS Forza	300	2014	2014	**225102550***	-	**225102560**	**225102563**	Anteriore con piastra | *Front with plate* * = Pastiglia non omologata | * *= Not homologated brake pad*
NSS Forza	300	2014	2014	**225102550***	-	**225102570***	-	Anteriore-Posteriore con piastra | *Front-Rear with plate* * = Pastiglia non omologata | * *= Not homologated brake pad*
Rebel	300	2017	2017	**225102640**	**225102643**	**225103520**	**225103323**	
SH i	300	2007	2007	**225102540**	**225102543**	**225102560**	**225102563**	
SH i	300	2007	2007	**225102540**	**225102543**	**225102570***	-	Posteriore con piastra | *Rear with plate* * = Pastiglia non omologata | * *= Not homologated brake pad*
SH i	300	2007	2007	**225102550***	-	**225102560**	**225102563**	Anteriore con piastra | *Front with plate* * = Pastiglia non omologata | * *= Not homologated brake pad*
SH i	300	2007	2007	**225102550***	-	**225102570***	-	Anteriore-Posteriore con piastra | *Front-Rear with plate* * = Pastiglia non omologata | * *= Not homologated brake pad*
SH i SH30	300	2015	2015	**225100870**	**225100873**	**225102560**	**225102563**	
SH i SH30	300	2015	2015	**225100870**	**225100873**	**225102570***	-	Posteriore con piastra | *Rear with plate* * = Pastiglia non omologata | * *= Not homologated brake pad*
TRX EX Sportrax	300	2001	2008	**225102850**	**225102853**	**225102850**	**225102853**	
TRX X	300	2009	2009	**225102850**	**225102853**	**225102850**	**225102853**	
XR	300	2010	2010	**225100920**	**225100923**	**225102630**	**225102633**	
ATC X	350	1985	1985	**225102650**	**225102653**	**225102850**	**225102853**	
ATC X	350	1986	1986	-	-	**225102850**	**225102853**	
XL R	350	1984	1984	**225102650**	**225102653**	-	-	
XR R	350	1984	1985	**225102650**	**225102653**	-	-	
CB	400	1981	1981	**225103580**	**225103583**	**225103580**	**225103583**	
CB	400	1981	1981	**225100330***	-	**225100330***	-	* = Pastiglia non omologata | * *= Not homologated brake pad*
CB A	400	1977	1981	**225100720**	**225100723**	-	-	
CB Four	400	1981	1981	**225103580**	**225103583**	-	-	
CB Four	400	1981	1981	**225100330***	-	-	-	* = Pastiglia non omologata | * *= Not homologated brake pad*
CB Hawk	400	1981	1981	**225103580**	**225103583**	**225103580**	**225103583**	
CB Hawk	400	1981	1981	**225100330***	-	**225100330***	-	* = Pastiglia non omologata | * *= Not homologated brake pad*
CB N	400	1982	1982	**225103580**	**225103583**	-	-	
CB N	400	1982	1982	**225100330***	-	-	-	* = Pastiglia non omologata | * *= Not homologated brake pad*
CB N, T, Hawk	400	1978	1978	**225100720**	**225100723**	-	-	
CB Super Four	400	1992	1995	**225102640**	**225102643**	**225102610**	**225102613**	
CB Super Four S	400	1997	1997	**225101100**	**225101103**	-	-	
CB T1, T2	400	1977	1978	**225100720**	**225100723**	-	-	
CB Twin	400	1982	1982	**225103580**	**225103583**	-	-	
CB Twin	400	1982	1982	**225100330***	-	-	-	* = Pastiglia non omologata | * *= Not homologated brake pad*
CB-1 (CB 400 F)	400	1989	1990	**225100870**	**225100873**	**225102610**	**225102613**	
CBR F	400	1992	1992	-	-	**225100930**	**225100933**	
CBR F, FII	400	1985	1985	**225103580**	**225103583**	**225103580**	**225103583**	

Modello *Model*	**CC**	**Da** *From*	**A** *To*	RMS YOUR BEST PARTNER **Anteriore Organica** *Front Organic*	SINTER **Anteriore Sinterizzata** *Front Sintered*	RMS YOUR BEST PARTNER **Posteriore Organica** *Rear Organic*	SINTER **Posteriore Sinterizzata** *Rear Sintered*	**Note** *Notes*
CBR F, FII	400	1985	1985	**225100330***	-	**225100330***	-	* = Pastiglia non omologata | * = *Not homologated brake pad*
CBR R	400	1987	1987	-	-	**225103580**	**225103583**	
CBR R	400	1987	1987	-	-	**225100330***	-	* = Pastiglia non omologata | * = *Not homologated brake pad*
CBR R	400	1987		-	-	**225103580**	**225103583**	
CBR RR	400	1987	1989	**225100870**	**225100873**	**225102610**	**225102613**	
CM A, T, TZ	400	1979	1979	**225100720**	**225100723**	-	-	
CM T	400	1979	1981	**225100720**	**225100723**	-	-	
CM T	400	1982	1982	**225103580**	**225103583**	-	-	
CM T	400	1982	1982	**225100330***	-	-	-	* = Pastiglia non omologata | * = *Not homologated brake pad*
FJS Silverwing	400	2006	2008	**225100970**	**225100973**	**225100870**	**225100873**	
GB T.T.	400	1988	1988	**225103580**	**225103583**	-	-	
GB T.T.	400	1988	1988	**225100330***	-	-	-	* = Pastiglia non omologata | * = *Not homologated brake pad*
NS R	400	1985	1987	-	-	**225103580**	**225103583**	
NS R	400	1985	1987	-	-	**225103580**	**225103583**	
NS R	400	1985	1987	-	-	**225100330***	-	* = Pastiglia non omologata | * = *Not homologated brake pad*
NTV Bros II	400	1988	1988	-	**225103103**	**225102610**	**225102613**	
NTV Bros II	400	1988		**225103250**	**225103253**	-	-	
NV Custom	400	1988	1988	-	-	**225103580**	**225103583**	
NV Custom	400	1988	1988	-	-	**225100330***	-	* = Pastiglia non omologata | * = *Not homologated brake pad*
NV Custom	400	1988		-	-	**225103580**	**225103583**	
NV Steed	400	1988	1988	**225103170**	**225103173**	-	-	
NV Steed	400	1992	1993	**225100870**	**225100873**	-	-	
RVF RR (NC35)	400	1990	1996	-	**225103103**	-	-	
SW-T	400	2009	2013	**225102540**	**225102543**	**225100870**	**225100873**	
SW-T	400	2009	2013	**225102550***	-	**225100870**	**225100873**	Anteriore con piastra | *Front with plate* * = Pastiglia non omologata | * = *Not homologated brake pad*
SW-T ABS	400	2009	2009	**225102540**	**225102543**	**225100870**	**225100873**	
SW-T ABS	400	2009	2009	**225102550***	-	**225100870**	**225100873**	Anteriore con piastra | *Front with plate* * = Pastiglia non omologata | * = *Not homologated brake pad*
TRX EX Sportrax	400	2001	2008	**225102850**	**225102853**	**225102850**	**225102853**	
TRX Fourtrax EX	400	1999	2000	**225102850**	**225102853**	**225102850**	**225102853**	
TRX X	400	2009	2012	**225102850**	**225102853**	**225102850**	**225102853**	
VFR R	400	1987	1988	-	-	**225102610**	**225102613**	
VFR R	400	1989	1992	**225103250**	**225103253**	-	-	
VFR R	400	1989	1992	-	**225103103**	-	-	
VRX T Roadstar	400	1995	1995	**225102640**	**225102643**	**225102610**	**225102613**	
VTR R (NC 30)	400	1990	1990	-	**225103103**	-	-	
VTR R (NC 30)	400	1990		**225103250**	**225103253**	-	-	
Xelvis	400	-	-	**225103580**	**225103583**	**225103580**	**225103583**	
Xelvis	400	-	-	**225100330***	-	**225100330***	-	* = Pastiglia non omologata | * = *Not homologated brake pad*
XR R	400	1996	1996	**225100920**	**225100923**	**225102630**	**225102633**	
XR Supermotard	400	2000	2000	**225100920**	**225100923**	**225102630**	**225102633**	
TRX FA / FPA	420	2009	2009	**225102850**	**225102853**	-	-	
TRX FPE / FPM 4x4	420	2009	2009	**225102850**	**225102853**	-	-	
XR R	440	2000	2000	**225100920**	**225100923**	**225102630**	**225102633**	
CB T	450	1982	1982	**225103580**	**225103583**	-	-	
CB T	450	1982	1982	**225100330***	-	-	-	* = Pastiglia non omologata | * = *Not homologated brake pad*

Modello *Model*	**CC**	**Da** *From*	**A** *To*	**Anteriore Organica** *Front Organic*	**Anteriore Sinterizzata** *Front Sintered*	**Posteriore Organica** *Rear Organic*	**Posteriore Sinterizzata** *Rear Sintered*	**Note** *Notes*
CM A, C	450	1982	1982	**225103580**	**225103583**	-	-	
CM A, C	450	1982	1982	**225100330***	-	-	-	* = Pastiglia non omologata | * = *Not homologated brake pad*
CMX Rebel	450	1986	1988	**225103580**	**225103583**	-	-	
CMX Rebel	450	1986	1988	**225100330***	-	-	-	* = Pastiglia non omologata | * = *Not homologated brake pad*
CRE F	450	2002	2002	**225100920**	**225100923**	**225100660**	**225100663**	
CRF Efi	450	2009	2012	**225100920**	**225100923**	**225100660**	**225100663**	
CRF R	450	2002	2008	**225100920**	**225100923**	**225100660**	**225100663**	
CRF R Efi	450	2013	2016	**225100920**	**225100923**	**225100660**	**225100663**	
CRF R Efi	450	2017	2017	**225100920**	**225100923**	**225100660**	**225100663**	
CRF RX Efi	450	2017	2017	**225100920**	**225100923**	**225100660**	**225100663**	
CRF X	450	2005	2005	**225100920**	**225100923**	**225100660**	**225100663**	
TRX EX Sportrax	450	2001	2001	**225102850**	**225102853**	**225102850**	**225102853**	
TRX R	450	2004	2004	**225100920**	**225100923**	-	-	
CB	500	1994	1996	**225100870**	**225100873**	-	-	
CB	500	1997	1997	**225101010**	**225101013**	**225101330**	**225101333**	
CB F	500	2013	2013	**225102640**	**225102643**	**225103520**	**225103323**	
CB S	500	1998	2003	**225101010**	**225101013**	**225101330**	**225101333**	
CB X	500	2013	2013	**225102640**	**225102643**	**225103520**	**225103323**	
CBF	500	2004	2008	**225102640**	**225102643**	**225100930**	**225100933**	
CBF ABS	500	2004	2008	**225102540**	**225102543**	**225100930**	**225100933**	
CBR F (Austria)	500	1987	1990	-	-	**225103580**	**225103583**	
CBR F (Austria)	500	1987	1990	-	-	**225103580**	**225103583**	
CBR F (Austria)	500	1987	1990	-	-	**225100330***	-	* = Pastiglia non omologata | * = *Not homologated brake pad*
CBR R	500	2013	2013	**225102640**	**225102643**	**225103520**	**225103323**	
CR R	500	1987	1994	-	-	**225102630**	**225102633**	
CR R	500	1995	2001	**225100920**	**225100923**	**225102630**	**225102633**	
CR RE, RF	500	1984	1985	**225102650**	**225102653**	-	-	
CR RG	500	1986	1986	**225102650**	**225102653**	-	-	
CX C	500	1981	1982	**225103580**	**225103583**	-	-	
CX C	500	1981	1982	**225100330***	-	-	-	* = Pastiglia non omologata | * = *Not homologated brake pad*
CX Silver W., Turbo	500	1983	1983	**225103580**	**225103583**	**225103580**	**225103583**	
CX Silver W., Turbo	500	1983	1983	**225100330***	-	**225100330***	-	* = Pastiglia non omologata | * = *Not homologated brake pad*
CX Silver W., Turbo	500	1983	-	**225103580**	**225103583**	**225103580**	**225103583**	
CX Turbo	500	1982	1983	**225103580**	**225103583**	-	-	
CX Turbo	500	1982	1983	**225100330***	-	-	-	* = Pastiglia non omologata | * = *Not homologated brake pad*
FT	500	1982	1982	**225103580**	**225103583**	**225103580**	**225103583**	
FT	500	1982	1982	**225100330***	-	**225100330***	-	* = Pastiglia non omologata | * = *Not homologated brake pad*
GB T.T.	500	1988	1988	**225103580**	**225103583**	-	-	
GB T.T.	500	1988	1988	**225100330***	-	-	-	* = Pastiglia non omologata | * = *Not homologated brake pad*
GL	500	1982	1982	-	-	**225103580**	**225103583**	
GL	500	1982	1982	-	-	**225100330***	-	* = Pastiglia non omologata | * = *Not homologated brake pad*
GL	500	1982		-	-	**225103580**	**225103583**	
GL D	500	1981	1982	**225103580**	**225103583**	-	-	
GL D	500	1981	1982	**225100330***	-	-	-	* = Pastiglia non omologata | * = *Not homologated brake pad*
NS R	500	1985	1985	**225103580**	**225103583**	**225103580**	**225103583**	
NS R	500	1985	1985	**225100330***	-	**225100330***	-	* = Pastiglia non omologata | * = *Not homologated brake pad*

Modello *Model*	**CC**	**Da** *From*	**A** *To*	**Anteriore Organica** *Front Organic*	**Anteriore Sinterizzata** *Front Sintered*	**Posteriore Organica** *Rear Organic*	**Posteriore Sinterizzata** *Rear Sintered*	**Note** *Notes*
NX Dominator (Austria)	500	1988	1992	**225103170**	**225103173**	**225102610**	**225102613**	
NX Dominator (Austria)	500	1993	1996	**225103170**	**225103173**	**225102610**	**225102613**	
NX Dominator (Austria)	500	1997	1997	**225100430**	-	**225101330**	**225101333**	
Rebel	500	2017	2017	**225102640**	**225102643**	**225103520**	**225103323**	
VF F, FII	500	1984	1986	**225103580**	**225103583**	**225103580**	**225103583**	
VF F, FII	500	1984	1986	**225100330***	-	**225100330***	-	* = Pastiglia non omologata | * = *Not homologated brake pad*
VT C Shadow	500	1983	1986	**225103580**	**225103583**	-	-	
VT C Shadow	500	1983	1986	**225100330***	-	-	-	* = Pastiglia non omologata | * = *Not homologated brake pad*
XBR S	500	1985	1989	**225103580**	**225103583**	-	-	
XBR S	500	1985	1989	**225100330***	-	-	-	* = Pastiglia non omologata | * = *Not homologated brake pad*
XL R	500	1983	1983	**225102650**	**225102653**	-	-	
XR R	500	1986	1986	**225102650**	**225102653**	-	-	
XR R, Pro Link	500	1983	1984	**225102650**	**225102653**	-	-	
CB SC	550	1983	1983	**225103580**	**225103583**	-	-	
CB SC	550	1983	1983	**225100330***	-	-	-	* = Pastiglia non omologata | * = *Not homologated brake pad*
CB Hornet	600	1998	2006	**225100870**	**225100873**	**225100930**	**225100933**	
CB Hornet	600	2007	2012	**225100870**	**225100873**	**225102930**	**225102933**	
CB Hornet (Japan)	600	1998	1999	**225102910**	**225102913**	**225100930**	**225100933**	
CB Hornet ABS	600	2007	2012	**225102540**	**225102543**	**225100930**	**225100933**	
CB Hornet S	600	2000	2003	**225100870**	**225100873**	**225100930**	**225100933**	
CBF N	600	2004	2011	**225100870**	**225100873**	**225100930**	**225100933**	
CBF N ABS	600	2008	2011	**225102540**	**225102543**	**225100930**	**225100933**	
CBF S	600	2004	2011	**225100870**	**225100873**	**225100930**	**225100933**	
CBF S ABS	600	2008	2011	**225102540**	**225102543**	**225100930**	**225100933**	
CBR F	600	2011	2011	**225100870**	**225100873**	**225102930**	**225102933**	
CBR F ABS	600	2011	2011	**225102540**	**225102543**	**225100930**	**225100933**	
CBR F Hurricane	600	1987	1990	-	-	**225103580**	**225103583**	
CBR F Hurricane	600	1987	1990	-	-	**225103580**	**225103583**	
CBR F Hurricane	600	1987	1990	-	-	**225100330***	-	* = Pastiglia non omologata | * = *Not homologated brake pad*
CBR F, Super Sport	600	1991	1994	-	-	**225100930**	**225100933**	
CBR F3	600	1995	1998	**225100870**	**225100873**	**225100930**	**225100933**	
CBR F4, F4 Sport	600	1999	2006	**225102910**	**225102913**	**225100930**	**225100933**	
CBR RR	600	2003	2004	**225102910**	**225102913**	**225100930**	**225100933**	
CBR RR	600	2005	2006	**225102950**	**225102953**	**225100930**	**225100933**	Pinza radiale | *Radial Caliper*
CBR RR	600	2007	2007	**225102950**	**225102953**	**225102930**	**225102933**	Pinza radiale | *Radial Caliper*
CBR RR ABS	600	2009	2009	**225102950**	**225102953**	**225102930**	**225102933**	Pinza radiale | *Radial Caliper*
CBX E	600	1985	1985	**225103580**	**225103583**	-	-	
CBX E	600	1985	1985	**225100330***	-	-	-	* = Pastiglia non omologata | * = *Not homologated brake pad*
FJS Silverwing	600	2001	2008	**225100970**	**225100973**	**225100870**	**225100873**	
FJS Silverwing	600	2009	2009	**225102540**	**225102543**	**225100870**	**225100873**	
NTV Bros I	600	1988	1988	-	**225103103**	**225102610**	**225102613**	
NTV Bros I	600	1988	-	**225103250**	**225103253**	-	-	
NTV Revere	600	1988	1992	-	-	**225102610**	**225102613**	
NV C	600	1988	1988	**225103170**	**225103173**	-	-	
Steed	600	1988	1991	**225103170**	**225103173**	-	-	
Steed	600	1992	1992	**225100870**	**225100873**	-	-	
SW-T	600	2011	2013	**225102540**	**225102543**	**225100870**	**225100873**	
VT C, Shadow	600	1988	1993	**225103170**	**225103173**	-	-	
VT C, Shadow	600	1994	2000	**225100870**	**225100873**	-	-	

Modello *Model*	**CC**	**Da** *From*	**A** *To*	RMS YOUR BEST PARTNER **Anteriore Organica** *Front Organic*	SINTER **Anteriore Sinterizzata** *Front Sintered*	RMS YOUR BEST PARTNER **Posteriore Organica** *Rear Organic*	SINTER **Posteriore Sinterizzata** *Rear Sintered*	**Note** *Notes*
VT CD Shadow VLX	600	1994	2000	**225100870**	**225100873**	-	-	
XL LM, RM	600	1985	1985	**225103580**	**225103583**	-	-	
XL LM, RM	600	1985	1985	**225100330***	-	-	-	* = Pastiglia non omologata | ** = Not homologated brake pad*
XL R	600	1983	1987	**225102650**	**225102653**	-	-	
XL V, Transalp	600	1987	1990	**225103580**	**225103583**	-	-	
XL V, Transalp	600	1987	1990	**225100330***	-	-	-	* = Pastiglia non omologata | ** = Not homologated brake pad*
XL V, Transalpino	600	1991	1993	**225103170**	**225103173**	**225102610**	**225102613**	
XL V, Transalpino	600	1994	1996	**225102640**	**225102643**	**225102610**	**225102613**	
XL V, Transalpino	600	1997	1999	**225100920**	**225100923**	**225102610**	**225102613**	
XLM LM	600	1987	1987	**225102650**	**225102653**	-	-	
XR R	600	1983	1987	**225102650**	**225102653**	-	-	
XR R	600	1991	1992	-	-	**225102630**	**225102633**	
XR R	600	1993	2000	**225100920**	**225100923**	**225102630**	**225102633**	
CB	650	1979	1981	**225100720**	**225100723**	-	-	
CB	650	1985	1985	**225103580**	**225103583**	-	-	
CB	650	1985	1985	**225100330***	-	-	-	* = Pastiglia non omologata | ** = Not homologated brake pad*
CB C	650	1980	1980	**225100720**	**225100723**	-	-	
CB F	650	2014	2014	**225102640**	**225102643**	**225103520**	**225103323**	
CB SC Nighthawk	650	1983	1985	**225103580**	**225103583**	-	-	
CB SC Nighthawk	650	1983	1985	**225100330***	-	-	-	* = Pastiglia non omologata | ** = Not homologated brake pad*
CB Z	650	1978	1981	**225100720**	**225100723**	-	-	
CBR F	650	2014	2014	**225102640**	**225102643**	**225103520**	**225103323**	
CBR F ABS	650	2014	2014	**225102640**	**225102643**	**225103520**	**225103323**	
CBX ED, SC, SCD	650	1983	1983	**225103580**	**225103583**	-	-	
CBX ED, SC, SCD	650	1983	1983	**225100330***	-	-	-	* = Pastiglia non omologata | ** = Not homologated brake pad*
CX C	650	1983	1983	**225103580**	**225103583**	-	-	
CX C	650	1983	1983	**225100330***	-	-	-	* = Pastiglia non omologata | ** = Not homologated brake pad*
CX E	650	1983	1983	-	-	**225103580**	**225103583**	
CX E	650	1983	1983	-	-	**225100330***	-	* = Pastiglia non omologata | ** = Not homologated brake pad*
CX E	650	1983	-	-	-	**225103580**	**225103583**	
CX Turbo	650	1983	1983	**225103580**	**225103583**	**225103580**	**225103583**	
CX Turbo	650	1983	1983	**225100330***	-	**225100330***	-	* = Pastiglia non omologata | ** = Not homologated brake pad*
FMX	650	2005	2008	**225100870**	**225100873**	**225100930**	**225100933**	
FX Vigor	650	1999	2002	**225101010**	**225101013**	**225101330**	**225101333**	
GL D	650	1983	1984	**225103580**	**225103583**	-	-	
GL D	650	1983	1984	**225100330***	-	-	-	* = Pastiglia non omologata | ** = Not homologated brake pad*
NT Hawk GT	650	1988	1991	**225100870**	**225100873**	**225102610**	**225102613**	
NT V Deauville	650	1998	2000	**225101010**	**225101013**	**225102610**	**225102613**	
NT V Deauville	650	2001	2001	**225101010**	**225101013**	**225100930**	**225100933**	
NT V Deauville	650	2002	2005	**225100970**	**225100973**	**225100970**	**225100973**	
NTV	650	1994	1994	**225102640**	**225102643**	**225102610**	**225102613**	
NTV Bros	650	1988	1997	**225103250**	**225103253**	-	-	
NTV Bros	650	1988	1997	-	**225103103**	**225102610**	**225102613**	
NTV Revere	650	1988	1993	**225100870**	**225100873**	**225102610**	**225102613**	
NX Dominator	650	1993	1996	**225103170**	**225103173**	**225102610**	**225102613**	
NX Dominator	650	1997	1999	**225101010**	**225101013**	**225101330**	**225101333**	
NX Dominator J-K	650	1988	1992	**225103170**	**225103173**	**225102610**	**225102613**	

Modello *Model*	**CC**	**Da** *From*	**A** *To*	RMS YOUR BEST PARTNER **Anteriore Organica** *Front Organic*	SINTER **Anteriore Sinterizzata** *Front Sintered*	RMS YOUR BEST PARTNER **Posteriore Organica** *Rear Organic*	SINTER **Posteriore Sinterizzata** *Rear Sintered*	**Note** *Notes*
SLR	650	1997	1999	**225101010**	**225101013**	**225101330**	**225101333**	
XL V Transalp	650	2000	2007	**225100920**	**225100923**	**225102610**	**225102613**	
XR L	650	1993	2012	**225100920**	**225100923**	**225102630**	**225102633**	
XR R	650	2000	2011	**225100920**	**225100923**	**225102630**	**225102633**	
XRV Africa Twin	650	1988	1989	**225103170**	**225103173**	**225102610**	**225102613**	
DN-01	680	2008	2008	**225102540**	**225102543**	**225102640**	**225102643**	
CB SC	700	1984	1986	**225103580**	**225103583**	-	-	
CB SC	700	1984	1986	**225100330***	-	-	-	* = Pastiglia non omologata | * = *Not homologated brake pad*
CTX	700	2014	2014	**225102640**	**225102643**	**225103520**	**225103323**	
CTX D ABS w/DCT	700	2014	2014	**225102640**	**225102643**	**225103520**	**225103323**	
CTX N	700	2014	2014	**225102640**	**225102643**	**225103520**	**225103323**	
CTX ND ABS w/DCT	700	2014	2014	**225102640**	**225102643**	**225103520**	**225103323**	
NC D Integra	700	2012	2013	**225102540**	**225102543**	**225100930**	**225100933**	
NC S	700	2012	2013	**225100870**	**225100873**	**225102610**	**225102613**	
NC SA ABS	700	2012	2013	**225102540**	**225102543**	**225100930**	**225100933**	
NC SD ABS	700	2012	2013	**225102540**	**225102543**	**225100930**	**225100933**	
NC X	700	2012	2013	**225100870**	**225100873**	**225102610**	**225102613**	
NC XA ABS	700	2012	2013	**225102540**	**225102543**	**225100930**	**225100933**	
NC XD ABS	700	2012	2013	**225102540**	**225102543**	**225100930**	**225100933**	
NT Deauville ABS	700	2006	2012	**225102540**	**225102543**	**225100970**	**225100973**	
NT V Varadero, ABS	700	2010	2010	**225102540**	**225102543**	**225100970**	**225100973**	
TRX XX	700	2008	2008	**225100920**	**225100923**	-	-	
VF C Magna	700	1984	1984	**225103580**	**225103583**	-	-	
VF C Magna	700	1984	1984	**225100330***	-	-	-	* = Pastiglia non omologata | * = *Not homologated brake pad*
VF C Magna	700	1987	1987	**225103580**	**225103583**	-	-	
VF C Magna	700	1987	1987	**225100330***	-	-	-	* = Pastiglia non omologata | * = *Not homologated brake pad*
VF F Interceptor	700	1984	1985	-	-	**225103580**	**225103583**	
VF F Interceptor	700	1984	1985	-	-	**225103580**	**225103583**	
VF F Interceptor	700	1984	1985	-	-	**225100330***	-	* = Pastiglia non omologata | * = *Not homologated brake pad*
VF S	700	1984	1985	**225103580**	**225103583**	-	-	
VF S	700	1984	1985	**225100330***	-	-	-	* = Pastiglia non omologata | * = *Not homologated brake pad*
VFR F Interceptor	700	1988	1989	**225100870**	**225100873**	**225102610**	**225102613**	
VFR F, F2	700	1986	1987	**225103170**	**225103173**	**225103580**	**225103583**	
VFR F, F2	700	1986	1987	-	-	**225103580**	**225103583**	
VT C, Shadow	700	1987	1987	**225103580**	**225103583**	-	-	
VT C, Shadow	700	1987	1987	**225100330***	-	-	-	* = Pastiglia non omologata | * = *Not homologated brake pad*
XL Transalp	700	2008	2011	**225100920**	**225100923**	**225102610**	**225102613**	
XL Transalp ABS	700	2008	2008	**225102540**	**225102543**	**225100930**	**225100933**	
A-ADV	750	2017	2017	**225103490**	**225103493**	**225103520**	**225103323**	
CB C	750	1980	1981	**225100720**	**225100723**	-	-	
CB C	750	1982	1982	**225103580**	**225103583**	-	-	
CB C	750	1982	1982	**225100330***	-	-	-	* = Pastiglia non omologata | * = *Not homologated brake pad*
CB C, F, FII, K	750	1985	1985	**225103580**	**225103583**	-	-	
CB C, F, FII, K	750	1985	1985	**225100330***	-	-	-	* = Pastiglia non omologata | * = *Not homologated brake pad*
CB F	750	1981	1982	**225103580**	**225103583**	**225103580**	**225103583**	
CB F	750	1981	1982	**225100330***	-	**225100330***	-	* = Pastiglia non omologata | * = *Not homologated brake pad*
CB K	750	1981	1981	**225103580**	**225103583**	**225103580**	**225103583**	

Modello *Model*	**CC**	**Da** *From*	**A** *To*	RMS YOUR BEST PARTNER **Anteriore Organica** *Front Organic*	SINTER **Anteriore Sinterizzata** *Front Sintered*	RMS YOUR BEST PARTNER **Posteriore Organica** *Rear Organic*	SINTER **Posteriore Sinterizzata** *Rear Sintered*	**Note** *Notes*
CB K	750	1981	1981	**225100330***	-	**225100330***	-	* = Pastiglia non omologata | * = *Not homologated brake pad*
CB K, L	750	1979	1979	**225100720**	**225100723**	-	-	
CB KZ	750	1982	1982	**225103580**	**225103583**	-	-	
CB KZ	750	1982	1982	**225100330***	-	-	-	* = Pastiglia non omologata | * = *Not homologated brake pad*
CB N, F, Seven Fifty	750	1992	1995	**225100870**	**225100873**	**225100930**	**225100933**	
CB PZ	750	1981	1981	**225100720**	**225100723**	-	-	
CBR Hurricane	750	1987	1987	**225103170**	**225103173**	**225103580**	**225103583**	
CBR Hurricane	750	1987	-	-	-	**225103580**	**225103583**	
CBX	750	1984	1988	**225103580**	**225103583**	**225103580**	**225103583**	
CBX	750	1984	1988	**225100330***	-	**225100330***	-	* = Pastiglia non omologata | * = *Not homologated brake pad*
CBX F	750	1984	1988	**225103580**	**225103583**	**225103580**	**225103583**	
CBX F	750	1984	1988	**225100330***	-	**225100330***	-	* = Pastiglia non omologata | * = *Not homologated brake pad*
NC D Integra	750	2014	2014	**225102640**	**225102643**	**225103520**	**225103323**	
NC S w/DCT	750	2014	2014	**225102640**	**225102643**	**225103520**	**225103323**	
NC X w/DCT	750	2014	2014	**225102640**	**225102643**	**225103520**	**225103323**	
NM4 Vultus ABS w/DCT	750	2015	2015	**225102640**	**225102643**	**225103520**	**225103323**	
NR	750	1992	1992	-	**225103103**	**225100930**	**225100933**	
NR	750	1992	-	**225103250**	**225103253**	-	-	
NV CG Shadow	750	1986	1986	**225103580**	**225103583**	-	-	
NV CG Shadow	750	1986	1986	**225100330***	-	-	-	* = Pastiglia non omologata | * = *Not homologated brake pad*
RVF RR (RC-45)	750	1994	1998	**225103250**	**225103253**	-	-	
RVF RR (RC-45)	750	1994	1998	-	**225103103**	-	-	
VF C	750	1982	1982	**225103580**	**225103583**	-	-	
VF C	750	1982	1982	**225100330***	-	-	-	* = Pastiglia non omologata | * = *Not homologated brake pad*
VF C, CD Magna	750	1994	1998	**225102640**	**225102643**	-	-	
VF C, Magna	750	1988	1993	**225103580**	**225103583**	-	-	
VF C, Magna	750	1988	1993	**225100330***	-	-	-	* = Pastiglia non omologata | * = *Not homologated brake pad*
VF F	750	1983	1984	**225103580**	**225103583**	**225103580**	**225103583**	
VF F	750	1983	1984	**225103580**	**225103583**	**225103580**	**225103583**	
VF F	750	1983	1984	**225100330***	-	**225100330***	-	* = Pastiglia non omologata | * = *Not homologated brake pad*
VF S	750	1985	1985	**225103580**	**225103583**	-	-	
VF S	750	1985	1985	**225100330***	-	-	-	* = Pastiglia non omologata | * = *Not homologated brake pad*
VF Sport	750	1982	1983	**225103580**	**225103583**	-	-	
VF Sport	750	1982	1983	**225100330***	-	-	-	* = Pastiglia non omologata | * = *Not homologated brake pad*
VFR F	750	1986	1987	**225103170**	**225103173**	**225103580**	**225103583**	
VFR F	750	1986	1987	-	-	**225103580**	**225103583**	
VFR F	750	1988	1998	**225100870**	**225100873**	**225102640**	**225102643**	
VFR R	750	1988	1993	**225103250**	**225103253**	-	-	
VFR R	750	1988	1993	-	**225103103**	-	-	
VP CH, Custom	750	1987	1987	**225103580**	**225103583**	-	-	
VP CH, Custom	750	1987	1987	**225100330***	-	-	-	* = Pastiglia non omologata | * = *Not homologated brake pad*
VP CH, Custom	750	1987	-	**225103580**	**225103583**	-	-	
VT Black Widow	750	2001	2003	**225102640**	**225102643**	-	-	
VT C, Shadow	750	1986	1986	**225103580**	**225103583**	-	-	

Modello *Model*	**CC**	**Da** *From*	**A** *To*	**Anteriore Organica** *Front Organic*	**Anteriore Sinterizzata** *Front Sintered*	**Posteriore Organica** *Rear Organic*	**Posteriore Sinterizzata** *Rear Sintered*	**Note** *Notes*
VT C, Shadow	750	1986	1986	**225100330***	-	-	-	* = Pastiglia non omologata | * = *Not homologated brake pad*
VT C, Shadow	750	1986	-	**225103580**	**225103583**	-	-	
VT C2 Shadow A.C.E.	750	1997	2003	**225102640**	**225102643**	-	-	
VT C2 Shadow Spirit	750	2007	2011	**225102640**	**225102643**	-	-	
VT C2B	750	2011	2011	**225102640**	**225102643**	-	-	
VT C2S ABS	750	2013	2013	**225102540**	**225102543**	**225103110**	**225103113**	
VT C4 Shadow	750	2004	2004	**225102640**	**225102643**	-	-	
VT CS ABS	750	2013	2013	**225102540**	**225102543**	**225103110**	**225103113**	
VT RS	750	2011	2011	**225102640**	**225102643**	-	-	
VT S	750	2011	2011	**225102640**	**225102643**	-	-	
XLV R	750	1983	1985	**225103580**	**225103583**	-	-	
XLV R	750	1983	1985	**225100330***	-	-	-	* = Pastiglia non omologata | * = *Not homologated brake pad*
XRV Africa Twin	750	1990	1992	-	-	**225102610**	**225102613**	
XRV Africa Twin	750	1993	2003	**225100920**	**225100923**	**225102610**	**225102613**	
Crossrunner	800	2011	2011	**225102540**	**225102543**	**225103050**	**225103053**	
PC Pacific Coast	800	1989	1997	**225100870**	**225100873**	-	-	
VFR	800	2006	2013	**225102540**	**225102543**	**225100970**	**225100973**	
VFR ABS	800	2006	2013	**225102540**	**225102543**	**225100970**	**225100973**	
VFR F	800	2014	2014	**225102950**	**225102953**	**225103050**	**225103053**	
VFR FI	800	1998	2001	**225100970**	**225100973**	**225100970**	**225100973**	
VFR V-TEC, ABS	800	2002	2005	**225100970**	**225100973**	**225100970**	**225100973**	
VFR X Crossrunner	800	2015	2015	**225102950**	**225102953**	**225103050**	**225103053**	
VT C	800	1988	1988	**225103580**	**225103583**	-	-	
VT C	800	1988	1988	**225100330***	-	-	-	* = Pastiglia non omologata | * = *Not homologated brake pad*
CB C	900	1982	1982	**225103580**	**225103583**	**225103580**	**225103583**	
CB C	900	1982	1982	**225100330***	-	**225100330***	-	* = Pastiglia non omologata | * = *Not homologated brake pad*
CB F, F2	900	1981	1984	-	-	**225103580**	**225103583**	
CB F, F2	900	1981	1984	-	-	**225103580**	**225103583**	
CB F, F2	900	1981	1984	-	-	**225100330***	-	* = Pastiglia non omologata | * = *Not homologated brake pad*
CB Hornet	900	2002	2007	**225103250**	**225103253**	-	-	
CB Hornet	900	2002	2007	-	**225103103**	**225100930**	**225100933**	
CBR RR Fireblade	900	1992	1997	**225103250**	**225103253**	-	-	
CBR RR Fireblade	900	1992	1997	-	**225103103**	**225100930**	**225100933**	
CBR RR Fireblade	900	1998	2003	**225102910**	**225102913**	**225100930**	**225100933**	
VFR F, Carat	950	1992	1992	**225100870**	**225100873**	**225102640**	**225102643**	
CB C	1000	1983	1983	**225103580**	**225103583**	**225103580**	**225103583**	
CB C	1000	1983	1983	**225100330***	-	**225100330***	-	* = Pastiglia non omologata | * = *Not homologated brake pad*
CB F (Big One)	1000	1993	1997	**225103250**	**225103253**	-	-	
CB F (Big One)	1000	1993	1997	-	**225103103**	**225100930**	**225100933**	
CB R	1000	2008	2008	**225102950**	**225102953**	**225103050**	**225103053**	Pinza radiale | *Radial Caliper*
CB R ABS	1000	2008	2008	**225102540**	**225102543**	**225103050**	**225103053**	
CBF	1000	2006	2011	**225102640**	**225102643**	**225100930**	**225100933**	
CBF ABS	1000	2006	2011	**225102540**	**225102543**	**225102540**	**225102543**	
CBF F ABS	1000	2015	2015	**225102540**	**225102543**	**225100930**	**225100933**	
CBF Limited Edition	1000	2009	2014	**225102640**	**225102643**	**225100930**	**225100933**	
CBF Limited Edition ABS	1000	2009	2014	**225102540**	**225102543**	**225102540**	**225102543**	
CBR F	1000	1987	1988	**225103170**	**225103173**	**225103580**	**225103583**	
CBR F	1000	1987	1988	-	-	**225103580**	**225103583**	
CBR F	1000	1989	1992	**225100870**	**225100873**	**225102640**	**225102643**	

Modello *Model*	**CC**	**Da** *From*	**A** *To*	**Anteriore Organica** *Front Organic*	**Anteriore Sinterizzata** *Front Sintered*	**Posteriore Organica** *Rear Organic*	**Posteriore Sinterizzata** *Rear Sintered*	**Note** *Notes*
CBR RR Fireblade	1000	2004	2005	**225102950**	**225102953**	**225100930**	**225100933**	Pinza radiale | *Radial Caliper*
CBR RR Fireblade	1000	2006	2008	**225102950**	**225102953**	**225102930**	**225102933**	Pinza radiale | *Radial Caliper*
CBR RR Fireblade ABS	1000	2009	2009	**225102950**	**225102953**	**225102930**	**225102933**	Pinza radiale | *Radial Caliper*
CBR RR SP	1000	2014	2016	-	**225102923**	**225102930**	**225102933**	
CBR RR SP	1000	2017	2017	-	**225102923**	**225102930**	**225102933**	
CBR RR SP2	1000	2017	2017	-	**225102923**	**225102930**	**225102933**	
CBX	1000	1981	1982	-	-	**225103580**	**225103583**	
CBX	1000	1981	1982	-	-	**225103580**	**225103583**	
CBX	1000	1981	1982	-	-	**225100330***	-	* = Pastiglia non omologata | * *= Not homologated brake pad*
CRF L Africa Twin	1000	2016	2016	**225103490**	**225103493**	**225103520**	**225103323**	
RC213V-S	1000	2016	2016	-	**225102923**	**225100490**	**225100493**	
VF F, FII	1000	1984	1986	**225103580**	**225103583**	**225103580**	**225103583**	
VF F, FII	1000	1984	1986	**225100330***	-	**225100330***	-	* = Pastiglia non omologata | * *= Not homologated brake pad*
VF FII Bol d'Or	1000	1985	1985	**225103580**	**225103583**	**225103580**	**225103583**	
VF FII Bol d'Or	1000	1985	1985	**225100330***	-	**225100330***	-	* = Pastiglia non omologata | * *= Not homologated brake pad*
VF R	1000	1984	1987	**225103580**	**225103583**	-	-	
VF R	1000	1984	1987	**225100330***	-	-	-	* = Pastiglia non omologata | * *= Not homologated brake pad*
VF R	1000	1986	1986	**225103580**	**225103583**	**225103580**	**225103583**	
VF R	1000	1986	1986	**225100330***	-	**225100330***	-	* = Pastiglia non omologata | * *= Not homologated brake pad*
VFR	1000	1989	1989	**225100870**	**225100873**	**225102640**	**225102643**	
VT C	1000	1988	1988	**225103580**	**225103583**	-	-	
VT C	1000	1988	1988	**225100330***	-	-	-	* = Pastiglia non omologata | * *= Not homologated brake pad*
VTR F Firestorm	1000	1997	2007	**225103250**	**225103253**	-	-	
VTR F Firestorm	1000	1997	2007	-	**225103103**	**225100930**	**225100933**	
VTR SP-1, SP-2	1000	2000	2006	**225102910**	**225102913**	**225100930**	**225100933**	
XL Varadero	1000	1999	1999	**225100970**	**225100973**	**225100970**	**225100973**	
XL Varadero	1000	2007	2007	**225102540**	**225102543**	**225100970**	**225100973**	
XL Varadero (Linked brake system)	1000	2000	2006	**225100970**	**225100973**	**225100970**	**225100973**	
XL Varadero ABS	1000	2004	2004	**225102540**	**225102543**	**225100970**	**225100973**	
CB	1100	2013	2013	**225102540**	**225102543**	**225100930**	**225100933**	
CB EX	1100	2014	2016	**225102910**	**225102913**	**225100930**	**225100933**	
CB EX	1100	2017	2017	**225102910**	**225102913**	**225100930**	**225100933**	
CB F	1100	1983	1983	**225103580**	**225103583**	**225103580**	**225103583**	
CB F	1100	1983	1983	**225100330***	-	**225100330***	-	* = Pastiglia non omologata | * *= Not homologated brake pad*
CB Hornet	1100	1999	1999	**225100970**	**225100973**	**225100970**	**225100973**	
CB R	1100	1981	1983	**225103580**	**225103583**	**225103580**	**225103583**	
CB R	1100	1981	1983	**225100330***	-	**225100330***	-	* = Pastiglia non omologata | * *= Not homologated brake pad*
CB RD	1100	1983	1983	**225103580**	**225103583**	**225103580**	**225103583**	
CB RD	1100	1983	1983	**225100330***	-	**225100330***	-	* = Pastiglia non omologata | * *= Not homologated brake pad*
CB RS	1100	2017	2017	-	-	**225100930**	**225100933**	
CB X-11	1100	2000	2003	**225100970**	**225100973**	**225100970**	**225100973**	
CBR XX Super Blackbird	1100	1996	1996	**225100970**	**225100973**	**225100970**	**225100973**	
GL -1, DLX Gold Wing	1100	1981	1981	**225103580**	**225103583**	**225103580**	**225103583**	
GL -1, DLX Gold Wing	1100	1981	1981	**225100330***	-	**225100330***	-	* = Pastiglia non omologata | * *= Not homologated brake pad*
GL Gold Wing	1100	1982	1983	-	-	**225103580**	**225103583**	
GL Gold Wing	1100	1982	1983	-	-	**225103580**	**225103583**	

Modello *Model*	**CC**	**Da** *From*	**A** *To*	RMS YOUR BEST PARTNER **Anteriore Organica** *Front Organic*	SINTER **Anteriore Sinterizzata** *Front Sintered*	RMS YOUR BEST PARTNER **Posteriore Organica** *Rear Organic*	SINTER **Posteriore Sinterizzata** *Rear Sintered*	**Note** *Notes*
GL Gold Wing	1100	1982	1983	-	-	**225100330***	-	* = Pastiglia non omologata | * = *Not homologated brake pad*
ST	1100	1990	2002	**225100870**	**225100873**	**225102640**	**225102643**	
ST A6 ABS-TCS-CBS	1100	1996	1996	**225100970**	**225100973**	**225100340**	**225100343**	
ST ABS-TCS	1100	1992	1995	**225100870**	**225100873**	**225102640**	**225102643**	
VF C	1100	1983	1986	-	-	**225103580**	**225103583**	
VF C	1100	1983	1986	-	-	**225103580**	**225103583**	
VF C	1100	1983	1986	-	-	**225100330***	-	* = Pastiglia non omologata | * = *Not homologated brake pad*
VF S	1100	1984	1985	-	-	**225103580**	**225103583**	
VF S	1100	1984	1985	-	-	**225103580**	**225103583**	
VF S	1100	1984	1985	-	-	**225100330***	-	* = Pastiglia non omologata | * = *Not homologated brake pad*
VT C Shadow	1100	1987	1993	**225103580**	**225103583**	-	-	
VT C Shadow	1100	1987	1993	**225100330***	-	-	-	* = Pastiglia non omologata | * = *Not homologated brake pad*
VT C Shadow	1100	1994	1996	**225100870**	**225100873**	-	-	
VT C2 Shadow A.C.E.	1100	1995	1995	**225100870**	**225100873**	**225100930**	**225100933**	
VT C2 Y	1100	2000	2000	**225100870**	**225100873**	**225100930**	**225100933**	
VT C3 Shadow Aero	1100	1998	1998	**225100870**	**225100873**	**225100930**	**225100933**	
VT T Shadow	1100	1998	1998	**225100870**	**225100873**	**225100930**	**225100933**	
GL A, I Gold Wing	1200	1984	1986	-	-	**225103580**	**225103583**	
GL A, I Gold Wing	1200	1984	1986	-	-	**225103580**	**225103583**	
GL A, I Gold Wing	1200	1984	1986	-	-	**225100330***	-	* = Pastiglia non omologata | * = *Not homologated brake pad*
GL DX Gold Wing	1200	1986	1986	-	-	**225103580**	**225103583**	
GL DX Gold Wing	1200	1986	1986	-	-	**225100330***	-	* = Pastiglia non omologata | * = *Not homologated brake pad*
GL DX Gold Wing	1200	1986	-	-	-	**225103580**	**225103583**	
GL Gold Wing	1200	1984	1986	-	-	**225103580**	**225103583**	
GL Gold Wing	1200	1984	1986	-	-	**225103580**	**225103583**	
GL Gold Wing	1200	1984	1986	-	-	**225100330***	-	* = Pastiglia non omologata | * = *Not homologated brake pad*
VFR F	1200	2010	2010	-	-	**225103050**	**225103053**	
VFR XC Crosstourer	1200	2012	2012	**225102540**	**225102543**	-	-	
VFR XDC Crosstourer w/DCT	1200	2012	2012	**225102540**	**225102543**	-	-	
CB	1300	2005	2005	**225102910**	**225102913**	**225100930**	**225100933**	
CB R	1300	2002	2004	**225102910**	**225102913**	**225103110**	**225103113**	
CB S	1300	2011	2011	**225102540**	**225102543**	**225100930**	**225100933**	
CB SF	1300	1998	2000	-	-	**225103110**	**225103113**	
CB X-4	1300	1997	2003	**225103250**	**225103253**	-	-	
CB X-4	1300	1997	2003	-	**225103103**	**225103110**	**225103113**	
CTX	1300	2014	2014	**225102540**	**225102543**	**225102640**	**225102643**	
ST Pan European, ABS	1300	2002	2007	**225100970**	**225100973**	**225100340**	**225100343**	
ST Pan European, ABS	1300	2008	2008	**225102540**	**225102543**	**225100340**	**225100343**	
VT CX A Fury	1300	2010	2012	**225100870**	**225100873**	**225100930**	**225100933**	
VT CXA A Fury ABS	1300	2010	2012	**225102540**	**225102543**	**225100970**	**225100973**	
VTX C	1300	2004	2009	**225100870**	**225100873**	**225100930**	**225100933**	
VTX S	1300	2003	2007	**225100870**	**225100873**	**225100930**	**225100933**	
GL A, SE, I Gold Wing	1500	1994	1994	**225103170**	**225103173**	**225103580**	**225103583**	
GL A, SE, I Gold Wing	1500	1994	-	-	-	**225103580**	**225103583**	
GL F6 C Valkyrie	1500	1996	2002	**225100870**	**225100873**	**225102640**	**225102643**	
GL Gold Win, Gold Wing SE	1500	1988	1988	**225103170**	**225103173**	**225103580**	**225103583**	
GL Gold Win, Gold Wing SE	1500	1988	-	-	-	**225103580**	**225103583**	
GLX	1500	1988	1988	**225103170**	**225103173**	**225103580**	**225103583**	
GLX	1500	1988	-	-	-	**225103580**	**225103583**	

Modello *Model*	**CC**	**Da** *From*	**A** *To*	RMS YOUR BEST PARTNER **Anteriore Organica** *Front Organic*	SINTER **Anteriore Sinterizzata** *Front Sintered*	RMS YOUR BEST PARTNER **Posteriore Organica** *Rear Organic*	SINTER **Posteriore Sinterizzata** *Rear Sintered*	**Note** *Notes*
GL Gold Wing	1800	2001	2001	**225100970**	**225100973**	**225100340**	**225100343**	
GL Gold Wing F6B	1800	2013	2013	**225100970**	**225100973**	**225100340**	**225100343**	
VTX	1800	2001	2001	**225100970**	**225100973**	**225100970**	**225100973**	
HUSABERG								
TE	125	2013	2013	**225100430**	-	**225100750**	**225100753**	
FE	250	2013	2013	**225100430**	-	**225100750**	**225100753**	
TE	250	2011	2013	**225100430**	-	**225100750**	**225100753**	
TE	300	2011	2013	**225100430**	-	**225100750**	**225100753**	
350	350	1991	1992	-	-	**225101200**	-	
FE	350	2013	2013	**225100430**	-	**225100750**	**225100753**	
FE	390	2010	2013	**225100430**	-	**225100750**	**225100753**	
FC	400	1999	2002	**225100430**	-	**225101330**	**225101333**	
FE S,E	400	1999	2003	**225100430**	-	**225101330**	**225101333**	
FS e, c	400	2001	2003	**225101150**	**225101153**	**225101330**	**225101333**	
FC	450	2003	2008	**225100430**	-	**225101330**	**225101333**	
FE	450	2009	2013	**225100430**	-	**225100750**	**225100753**	
FE e	450	2004	2008	**225100430**	-	**225101330**	**225101333**	
FS c	450	2006	2008	-	-	**225101330**	**225101333**	
FS e, c	450	2003	2005	**225101150**	**225101153**	**225101330**	**225101333**	
FX e	450	2003	2008	**225100430**	-	**225101330**	**225101333**	
FC ,e	470	2001	2002	**225100430**	-	**225101330**	**225101333**	
FX e	470	2001	2002	**225100430**	-	**225101330**	**225101333**	
500	500	1991	1998	-	-	**225101200**	-	
Enduro	501	-	-	-	-	**225101200**	-	
FC	501	1999	2001	**225100430**	-	**225101330**	**225101333**	
FE	501	2013	2013	**225100430**	-	**225100750**	**225100753**	
FE ,S,E	501	1999	2004	**225100430**	-	**225101330**	**225101333**	
FC	550	2001	2005	**225100430**	-	**225101330**	**225101333**	
FE e	550	2004	2008	**225100430**	-	**225101330**	**225101333**	
FE	570	2009	2013	**225100430**	-	**225100750**	**225100753**	
Enduro	600	-	-	-	-	**225101200**	-	
FC	600	1999	2001	**225100430**	-	**225101330**	**225101333**	
FE ,S,E	600	1999	2002	**225100430**	-	**225101330**	**225101333**	
FE e	650	2001	2008	**225100430**	-	**225101330**	**225101333**	
FS e, c	650	2001	2005	**225101150**	**225101153**	**225101330**	**225101333**	
FS e, c	650	2006	2008	-	-	**225101330**	**225101333**	
FX e	650	2001	2005	**225100430**	-	**225101330**	**225101333**	
HUSQVARNA								
CR Junior	50	2006	2006	**225100650**	-	-	-	
CR Pro Senior	50	2006	2006	**225100650**	-	**225103220**	**225103223**	
CR Senior	50	2006	2006	**225100650**	-	**225103220**	**225103223**	
Husky Boy J, R, S	50	2001	2001	**225100080**	**225100083**	-	-	
Racing	50	1998	1998	**225100080**	**225100083**	-	-	
SM	50	2002	2002	**225100740**	-	**225100080**	**225100083**	
SM	50	2010	2010	**225100650**	-	**225103220**	**225103223**	
TC	50	2017	2017	**225103220**	**225103223**	**225103220**	**225103223**	
WR	50	2002	2002	**225100740**	-	**225100080**	**225100083**	
WRS	50	1998	1998	**225100080**	**225100083**	-	-	
CR	65	2012	2013	-	-	**225103530**	**225103533**	
CR	65	2012	2013	-	-	**225103530**	**225103533**	
TC	85	2014	2014	-	**225103543**	**225103530**	**225103533**	
CR	125	1985	1990	**225100010**	**225100013**	-	-	
CR	125	1996	2004	**225100430**	-	**225101330**	**225101333**	
CR	125	2005	2013	**225100430**	-	**225100750**	**225100753**	

Modello *Model*	**CC**	**Da** *From*	**A** *To*	**Anteriore Organica** *Front Organic*	**Anteriore Sinterizzata** *Front Sintered*	**Posteriore Organica** *Rear Organic*	**Posteriore Sinterizzata** *Rear Sintered*	**Note** *Notes*
CX	125	1984	1985	**225100010**	**225100013**	-	-	
SM S	125	2009	2013	**225100430**	-	**225101330**	**225101333**	
SM S 4T	125	2011	2013	**225100430**	-	**225101330**	**225101333**	
SM Supermotard, S	125	1999	2013	**225100430**	-	**225101330**	**225101333**	
TC	125	2014	2014	**225100430**	-	**225100750**	**225100753**	
TE	125	2014	2014	**225100430**	-	**225100750**	**225100753**	
TE 4T	125	2011	2013	**225100430**	-	**225101330**	**225101333**	
WR	125	1996	2013	**225100430**	-	**225101330**	**225101333**	
WRE	125	1996	2013	**225100430**	-	**225101330**	**225101333**	
WRK	125	1990	1990	-	-	**225101200**	-	
Prof	200	1986	1986	**225100010**	**225100013**	**225100010**	**225100013**	
CR	240	1984	1985	**225100010**	**225100013**	-	-	
WRK	240	1990	1990	-	-	**225101200**	-	
CR	250	1985	1987	**225100010**	**225100013**	-	-	
CR	250	1996	2004	**225100430**	-	**225101330**	**225101333**	
CR	250	2005	2005	**225100430**	-	**225100750**	**225100753**	
CX	250	1984	1985	**225100010**	**225100013**	-	-	
FC	250	2014	2014	**225100430**	-	**225100750**	**225100753**	
FE	250	2014	2014	**225100430**	-	**225100750**	**225100753**	
TC	250	2002	2003	**225100430**	-	**225101330**	**225101333**	
TC	250	2004	2013	**225100430**	-	**225100750**	**225100753**	
TC	250	2014	2014	**225100430**	-	**225100750**	**225100753**	
TE	250	2002	2013	**225100430**	-	**225101330**	**225101333**	
TE	250	2014	2014	**225100430**	-	**225100750**	**225100753**	
TE 4T	250	2010	2013	**225100430**	-	**225100750**	**225100753**	
WR	250	1996	2013	**225100430**	-	**225101330**	**225101333**	
TC	300	2014	2014	**225100430**	-	**225100750**	**225100753**	
TE	300	2014	2014	**225100430**	-	**225100750**	**225100753**	
WR	300	2009	2013	**225100430**	-	**225100750**	**225100753**	
TE 4T	310	2010	2013	**225100430**	-	**225100750**	**225100753**	
FC	350	2014	2014	**225100430**	-	**225100750**	**225100753**	
FE	350	2014	2014	**225100430**	-	**225100750**	**225100753**	
TE	350	1996	2013	**225100430**	-	**225101330**	**225101333**	
TE Enduro	350	1990	1990	-	-	**225101200**	-	
WR	360	1998	2013	**225100430**	-	**225101330**	**225101333**	
Enduro	400	1985	1985	**225100010**	**225100013**	-	-	
SM R	400	2002	2002	**225100520**	**225100523**	**225101330**	**225101333**	
TE	400	2001	2013	**225100430**	-	**225101330**	**225101333**	
Svartpilen	401	2017	2017	**225103310**	**225103313**	**225101330**	**225101333**	
Vitpilen	401	2017	2017	**225103310**	**225103313**	**225101330**	**225101333**	
TE	410	1996	2013	**225100430**	-	**225101330**	**225101333**	
Enduro	430	1985	1985	**225100010**	**225100013**	-	-	
SMR	449	2011	2011	**225102860**	**225102863**	**225100750**	**225100753**	
TC	449	2011	2013	**225100430**	-	**225100750**	**225100753**	
TE	449	2011	2013	**225100430**	-	**225100750**	**225100753**	
FC	450	2014	2014	**225100430**	-	**225100750**	**225100753**	
FE	450	2014	2014	**225100430**	-	**225100750**	**225100753**	
FS	450	2015	2015	-	**225102923**	**225100750**	**225100753**	
SM R	450	2003	2004	**225100520**	**225100523**	**225101330**	**225101333**	
SM R	450	2005	2005	**225102860**	**225102863**	**225101330**	**225101333**	
SM R	450	2006	2006	**225102860**	**225102863**	**225100750**	**225100753**	
SM RR	450	2006	2006	**225102860**	**225102863**	**225100750**	**225100753**	
TC	450	2002	2003	**225100430**	-	**225101330**	**225101333**	
TC	450	2004	2010	**225100430**	-	**225100750**	**225100753**	

Modello *Model*	**CC**	**Da** *From*	**A** *To*	RMS YOUR BEST PARTNER **Anteriore Organica** *Front Organic*	SINTER **Anteriore Sinterizzata** *Front Sintered*	RMS YOUR BEST PARTNER **Posteriore Organica** *Rear Organic*	SINTER **Posteriore Sinterizzata** *Rear Sintered*	**Note** *Notes*
TE	450	2002	2010	**225100430**	-	**225101330**	**225101333**	
TE	450	2014	2014	**225100430**	-	**225100750**	**225100753**	
CR	500	1986	1986	**225100010**	**225100013**	-	-	
CX/CR	500	1984	1985	**225100010**	**225100013**	-	-	
TC	500	1986	1986	**225100010**	**225100013**	-	-	
FE	501	2014	2014	**225100430**	-	**225100750**	**225100753**	
504	504	1983	1983	**225100010**	**225100013**	-	-	
510	510	1990	1990	-	-	**225101200**	-	
SM Centennial	510	2006	2006	**225102860**	**225102863**	**225100750**	**225100753**	
SM R	510	2005	2005	**225102860**	**225102863**	**225101330**	**225101333**	
SM R	510	2006	2006	**225102860**	**225102863**	**225100750**	**225100753**	
TC	510	2002	2003	**225100430**	-	**225101330**	**225101333**	
TC	510	2004	2010	**225100430**	-	**225100750**	**225100753**	
TE	510	1986	1987	**225100010**	**225100013**	-	-	
TE	510	2002	2010	**225100430**	-	**225101330**	**225101333**	
TE Centennial	510	2004	2005	**225100430**	-	**225101330**	**225101333**	
SMR	511	2011	2011	**225102860**	**225102863**	**225100750**	**225100753**	
TE	511	2011	2013	**225100430**	-	**225100750**	**225100753**	
TE	511	2014	2014	**225100430**	-	**225100750**	**225100753**	
Nox	570	2001	2003	**225101100**	**225101103**	**225101330**	**225101333**	
SM R	570	2001	2001	**225100520**	**225100523**	**225101330**	**225101333**	
TC	570	2001	2013	**225100430**	-	**225101330**	**225101333**	
TE	570	2001	2013	**225100430**	-	**225101330**	**225101333**	
LT	610	2000	2000	**225101100**	**225101103**	**225101330**	**225101333**	
SM ie	610	2007	2007	**225102860**	**225102863**	**225100750**	**225100753**	
SM Super Motard, S	610	1998	1998	**225101100**	**225101103**	**225101330**	**225101333**	
TC	610	1996	2013	**225100430**	-	**225101330**	**225101333**	
TE Rallye	610	1996	2013	**225100430**	-	**225101330**	**225101333**	
SM	630	2010	2010	**225102860**	**225102863**	**225100750**	**225100753**	
SMR	630	2004	2008	**225101100**	**225101103**	**225101330**	**225101333**	
TE	630	2010	2013	**225100430**	-	**225100750**	**225100753**	
TE	630	2014	2014	**225100430**	-	**225100750**	**225100753**	
STR CRC	650	2007	2007	**225102860**	**225102863**	**225100750**	**225100753**	
TR Strada	650	2013	2013	**225101010**	**225101013**	**225101330**	**225101333**	
TR Terra	650	2013	2013	**225101010**	**225101013**	**225101330**	**225101333**	
FE Enduro	701	2017	2017	**225101010**	**225101013**	**225101330**	**225101333**	
SM Supermoto	701	2015	2015	**225102860**	**225102863**	**225101330**	**225101333**	
Nuda	900	2012	2012	**225101100**	**225101103**	**225101330**	**225101333**	
Nuda R, ABS	900	2012	2012	-	**225102923**	**225101330**	**225101333**	
HYOSUNG								
Avanti	50	1999	1999	**225100040**	-	-	-	
Rush	50	1997	1997	**225100040**	-	-	-	
SB	50	2000	2000	**225100040**	-	-	-	
SB P	50	2000	2000	**225100040**	-	-	-	
SD	50	2000	2000	**225100040**	-	-	-	
Sense	50	1998	1998	**225100040**	-	-	-	
SF	50	1999	1999	**225100040**	-	-	-	
Super Cab	50	1995	1995	**225100040**	-	-	-	
Super Cab Plus	50	1998	1998	**225100040**	-	-	-	
Cab	100	1998	1998	**225100040**	-	-	-	
EZ	100	2000	2000	**225100040**	-	-	-	
FX 110	110	2002	2002	**225100040**	-	-	-	
KR Master	110	2004	2004	**225100040**	-	-	-	
Midas Plus	110	1998	1998	**225100040**	-	-	-	

Modello *Model*	**CC**	**Da** *From*	**A** *To*	RMS YOUR BEST PARTNER **Anteriore Organica** *Front Organic*	SINTER **Anteriore Sinterizzata** *Front Sintered*	RMS YOUR BEST PARTNER **Posteriore Organica** *Rear Organic*	SINTER **Posteriore Sinterizzata** *Rear Sintered*	**Note** *Notes*
Aquila	125	2000	2000	**225101420**	**225101423**	-	-	
Boomer	125	2003	2003	**225100190**	**225100193**	**225102590**	**225102593**	
Exceed	125	2002	2002	**225100190**	**225100193**	**225102590**	**225102593**	
GD EXIV	125	2012	2012	**225102910**	**225102913**	**225100040**	-	
GF	125	1998	1998	-	-	-	-	
GPS D	125	2000	2000	**225100190**	**225100193**	-	-	
Grand Prix	125	1998	1998	**225100190**	**225100193**	-	-	
Grand Prix Plus	125	2002	2002	**225102590**	**225102593**	-	-	
GT	125	2007	2007	**225102590**	**225102593**	**225102590**	**225102593**	
GT Comet	125	2002	2003	**225102590**	**225102593**	-	-	
GT Comet	125	2004	2004	**225102590**	**225102593**	**225102590**	**225102593**	
GT Naked	125	2013	2013	**225102590**	**225102593**	**225102590**	**225102593**	
GT R Supersport	125	2007	2007	**225102590**	**225102593**	**225102590**	**225102593**	
GV Aguila	125	2002	2004	**225102590**	**225102593**	-	-	
GV Aguila	125	2005	2005	**225102590**	**225102593**	-	-	
Hyper	125	1999	1999	**225100190**	**225100193**	-	-	
RT Karion	125	2002	2006	**225102590**	**225102593**	-	-	
RT Karion	125	2007	2007	**225102590**	**225102593**	**225102590**	**225102593**	
RX	125	2000	2000	**225102590**	**225102593**	-	-	
RX SM	125	2007	2007	**225102590**	**225102593**	**225102590**	**225102593**	
V2	125	1999	1999	**225100870**	**225100873**	-	-	
XRX	125	2007	2007	**225102590**	**225102593**	**225102590**	**225102593**	
XRX Offroad	125	1999	2006	**225102590**	**225102593**	-	-	
Exceed	150	2002	2002	**225100190**	**225100193**	**225102590**	**225102593**	
Grand Prix	150	1998	1998	**225100190**	**225100193**	-	-	
Aquila	250	2000	2000	**225100870**	**225100873**	-	-	
GD EXIV-R	250	2015	2015	**225102910**	**225102913**	**225100310**	**225100313**	
GT Comet	250	2002	2002	-	-	**225100720**	**225100723**	
GT Comet	250	2003	2003	**225102590**	**225102593**	**225102590**	**225102593**	
GT iR	250	2013	2014	**225102590**	**225102593**	**225102590**	**225102593**	
GT iR	250	2015	2015	**225102910**	**225102913**	**225100310**	**225100313**	
GT P	250	2013	2013	**225102590**	**225102593**	**225102590**	**225102593**	
GT R	250	2007	2007	**225102590**	**225102593**	**225102590**	**225102593**	
GV	250	2002	2002	**225102590**	**225102593**	-	-	
GA	300	1998	1998	**225101490**	**225101493**	-	-	
GT R	300	2016	2016	**225102910**	**225102913**	**225100310**	**225100313**	
GV	300	2016	2016	**225102910**	**225102913**	**225101070**	**225101073**	
TE	400	2005	2006	**225101440**	-	-	-	
XRX	400	2005	2005	**225102590**	**225102593**	**225102630**	**225102633**	
RX SM	450	2008	2008	**225102860**	**225102863**	**225101330**	**225101333**	
TE	450	2007	2007	**225101440**	-	-	-	
Comet	600	2002	2002	-	-	**225100720**	**225100723**	
Comet	600	2003	2003	**225102590**	**225102593**	-	-	
GT	650	2004	2004	**225102590**	**225102593**	**225102590**	**225102593**	
GT i	650	2013	2013	**225102910**	**225102913**	**225102590**	**225102593**	
GT i Naked	650	2015	2015	**225102910**	**225102913**	**225102590**	**225102593**	
GT iR	650	2013	2014	**225102910**	**225102913**	**225102590**	**225102593**	
GT iR	650	2015	2015	**225102910**	**225102913**	**225100310**	**225100313**	
GT P	650	2016	2016	**225102590**	**225102593**	**225102590**	**225102593**	
GT R	650	2005	2005	**225102590**	**225102593**	**225102590**	**225102593**	
GT S	650	2005	2005	**225102590**	**225102593**	**225102590**	**225102593**	
GT TTC	650	2007	2007	**225102590**	**225102593**	**225102590**	**225102593**	
GT TTC / Custom Trendkiller	650	2007	2007	**225102590**	**225102593**	**225102590**	**225102593**	
GT X	650	2007	2007	**225102590**	**225102593**	**225102590**	**225102593**	

Modello *Model*	**CC**	**Da** *From*	**A** *To*	RMS YOUR BEST PARTNER **Anteriore Organica** *Front Organic*	SINTER **Anteriore Sinterizzata** *Front Sintered*	RMS YOUR BEST PARTNER **Posteriore Organica** *Rear Organic*	SINTER **Posteriore Sinterizzata** *Rear Sintered*	**Note** *Notes*
GV Aguila	650	2004	2005	**225102590**	**225102593**	**225103130**	**225103133**	
GV Aguila	650	2006	2006	**225102590**	**225102593**	**225102590**	**225102593**	
ST	700	2011	2011	**225102910**	**225102913**	**225102590**	**225102593**	
ST i Deluxe	700	2013	2013	**225102910**	**225102913**	**225102590**	**225102593**	
INDIAN								
Scout Sixty	1000	2016	2016	-	-	**225103070**	**225103073**	
Scout Sixty	1000	2017	2017	**225101010**	**225101013**	**225101330**	**225101333**	
Scout	1130	2015	2016	-	-	**225103070**	**225103073**	
Scout	1200	2017	2017	**225101010**	**225101013**	**225101330**	**225101333**	
Chief Blackhawk	1700	2011	2013	**225100520**	**225100523**	**225103150**	**225103153**	
Chief Bomber	1700	2010	2013	**225100520**	**225100523**	**225103150**	**225103153**	
Chief Classic	1700	2010	2013	**225100520**	**225100523**	**225103150**	**225103153**	
Chief Dark Horse	1700	2010	2013	**225100520**	**225100523**	**225103150**	**225103153**	
Chief Deluxe	1700	2009	2013	**225100520**	**225100523**	**225103150**	**225103153**	
Chief Roadmaster	1700	2009	2013	**225100520**	**225100523**	**225103150**	**225103153**	
Chief Standard	1700	2009	2013	**225100520**	**225100523**	**225103150**	**225103153**	
Chief Vintage	1700	2009	2013	**225100520**	**225100523**	**225103150**	**225103153**	
Chief Classic	1800	2014	2014	-	**225102993**	**225102640**	**225102643**	
Chief Vintage	1800	2014	2014	-	**225102993**	**225102640**	**225102643**	
Chieftain	1800	2014	2014	-	**225102993**	**225102640**	**225102643**	
Dark Horse	1800	2016	2016	-	**225102993**	**225102640**	**225102643**	
Roadmaster	1800	2015	2015	-	**225102993**	**225102640**	**225102643**	
Springfield	1800	2016	2016	-	**225102993**	**225102640**	**225102643**	
INNOCENTI								
Lambretta DL	125	-	-	**225120601**	-	**225120601**	-	
ITALJET								
Bazooka	50	1993	1993	**225100180**	-	-	-	
Cruise	50	1995	1995	**225100180**	-	-	-	
Dragster	50	1999	1999	**225100080**	**225100083**	**225100080**	**225100083**	
Formula	50	1994	1994	**225100160**	-	**225100190**	**225100193**	
Formula Air	50	1999	1999	**225100080**	**225100083**	-	-	
Formula L.C.	50	1998	1998	**225100080**	**225100083**	**225100080**	**225100083**	
Jet-Set	50	2002	2002	**225102810**	-	-	-	
Pista 2	50	1992	1992	**225100180**	-	-	-	
Rollercraft	50	2008	2008	**225102590**	**225102593**	**225100350**	**225100353**	
Scoop	50	1993	1993	**225100180**	-	-	-	
SHOPPING 50	50	1990	-	**225120200**	-	-	-	
SHOPPING 50	50	1990	-	-	-	**225120230**	-	
SM	50	2002	2002	**225100740**	-	-	-	
Torpedo	50	1998	1998	**225100080**	**225100083**	-	-	
Torpedo 4T	50	2001	2001	**225100080**	**225100083**	-	-	
Formula	80	1994	1994	**225100160**	-	**225100190**	**225100193**	
Millennium 2T	100	2001	2001	**225100040**	-	-	-	
Millennium 2T	100	2001	2001	**225102810**	-	-	-	
Amarcord	125	2008	2008	**225102630**	**225102633**	-	-	
Dragster	125	1999	1999	**225100080**	**225100083**	**225100080**	**225100083**	
Formula	125	1994	1994	**225100160**	-	**225100190**	**225100193**	
Formula L.C.	125	1999	1999	**225100080**	**225100083**	**225100080**	**225100083**	
Jet-Set	125	2002	2002	**225102810**	-	-	-	
Jupiter	125	2002	2002	**225100410**	**225100413**	**225100080**	**225100083**	
Millennium	125	2000	2000	**225100040**	-	-	-	
Millennium	125	2000	2000	**225102810**	-	-	-	
SM	125	2002	2002	**225100740**	-	-	-	
Torpedo	125	1999	1999	**225100080**	**225100083**	-	-	

Modello *Model*	**CC**	**Da** *From*	**A** *To*	RMS YOUR BEST PARTNER **Anteriore Organica** *Front Organic*	SINTER **Anteriore Sinterizzata** *Front Sintered*	RMS YOUR BEST PARTNER **Posteriore Organica** *Rear Organic*	SINTER **Posteriore Sinterizzata** *Rear Sintered*	**Note** *Notes*
Torpedo	125	2008	2008	**225102590**	**225102593**	**225100350**	**225100353**	
Twin	125	1998	1998	**225100080**	**225100083**	**225100080**	**225100083**	
Jet-Set	150	2002	2002	**225102810**	-	-	-	
Jupiter	150	2002	2002	**225100410**	**225100413**	**225100080**	**225100083**	
Millennium	150	2000	2000	**225100040**	-	-	-	
Millennium	150	2000	2000	**225102810**	-	-	-	
Torpedo	150	2008	2008	**225102590**	**225102593**	**225100350**	**225100353**	
Torpedo 4T	150	2001	2001	**225100080**	**225100083**	-	-	
Dragster	180	1999	1999	**225100080**	**225100083**	**225100080**	**225100083**	
Jupiter	250	2001	2001	**225100410**	**225100413**	**225100560**	-	
350	350	1983	1983	**225100010**	**225100013**	-	-	
Bazooka	650	2006	2006	**225102590**	**225102593**	**225102590**	**225102593**	
Grifon	650	2006	2006	**225102590**	**225102593**	**225102590**	**225102593**	
Grifon	900	2000	2000	**225100520**	**225100523**	-	-	
KAWASAKI								
AR	50	1981	1982	**225100040**	-	-	-	
KMX	50	1988	1988	**225100040**	-	-	-	
KSR I (50)	50	1990	1991	**225100040**	-	**225100040**	-	
KX	65	2000	2000	-	-	**225101440**	-	
AR	80	1981	1981	**225100040**	-	-	-	
KD	80	1988	1990	**225100040**	-	-	-	
KMX	80	1987	1987	**225102800**	-	-	-	
KSR II (80)	80	1990	1991	**225100040**	-	**225100040**	-	
KX	80	1984	1987	**225100040**	-	-	-	
KX	80	1988	1996	**225100040**	-	**225102850**	**225102853**	
KX	80	1997	2000	-	-	**225102850**	**225102853**	
KX	85	2001	2001	-	-	**225102850**	**225102853**	
KX II	85	2001	2013	-	-	**225102850**	**225102853**	
KH EX	100	1988	1988	**225101200**	-	-	-	
KH EX, G	100	1981	1982	-	-	-	-	
KH GH	100	1983	1983	**225101200**	-	-	-	
KX	100	1988	1996	**225100040**	-	**225102850**	**225102853**	
KX	100	1997	1997	-	-	**225102850**	**225102853**	
AR	125	1982	1994	**225101200**	-	-	-	
BN Eliminator	125	1998	1999	**225101440**	-	-	-	
BN Eliminator A3	125	2000	2000	**225101070**	**225101073**	-	-	
J	125	2016	2016	**225100870**	**225100873**	**225102760**	**225102763**	
KDX	125	1990	1994	**225100040**	-	**225101790**	-	
KE	125	1986	1986	**225101200**	-	-	-	
KH	125	1982	1998	**225101200**	-	-	-	
KLX	125	2010	2014	**225101420**	**225101423**	**225101440**	-	
KLX D-Tracker	125	2010	2014	**225101420**	**225101423**	**225101440**	-	
KMX	125	1986	1986	**225100040**	-	**225101200**	-	
KMX	125	1987	2002	**225102800**	-	**225101200**	-	
KX	125	1982	1982	**225100040**	-	-	-	
KX	125	1983	1985	**225101200**	-	-	-	
KX	125	1986	1986	**225101200**	-	**225101200**	-	
KX	125	1987	1988	-	-	**225101200**	-	
KX	125	1989	1993	**225101420**	**225101423**	**225101790**	-	
KX	125	1994	1994	**225100920**	**225100923**	**225101790**	-	
KX	125	1995	2008	**225100920**	**225100923**	**225102630**	**225102633**	
Z Pro	125	2017	2017	-	-	**225101440**	-	
ZL Eliminator	125	1997	1997	**225100040**	-	-	-	
KLX ,L	140	2008	2008	**225101420**	**225101423**	**225102850**	**225102853**	

Modello *Model*	**CC**	**Da** *From*	**A** *To*	RMS YOUR BEST PARTNER **Anteriore Organica** *Front Organic*	SINTER **Anteriore Sinterizzata** *Front Sintered*	RMS YOUR BEST PARTNER **Posteriore Organica** *Rear Organic*	SINTER **Posteriore Sinterizzata** *Rear Sintered*	**Note** *Notes*
KLX D-Tracker	150	2016	2016	**225101420**	**225101423**	**225101440**	-	
KLX L	150	2014	2014	**225101420**	**225101423**	**225101440**	-	
KDX	200	1993	1993	**225101420**	**225101423**	**225101790**	-	
KDX	200	1994	1999	**225100920**	**225100923**	**225101790**	-	
KDX C	200	1986	1988	**225101200**	-	-	-	
KDX SR	200	1989	1992	**225101200**	-	**225101790**	-	
KMX	200	1988	1990	**225100040**	-	**225101200**	-	
Z	200	1983	1983	**225101200**	-	-	-	
KDX R	220	1997	1997	**225100920**	**225100923**	**225101790**	-	
BR	250	1986	1986	**225101490**	**225101493**	-	-	
CS	250	1986	1986	**225101490**	**225101493**	-	-	
EL	250	1991	1994	**225101490**	**225101493**	-	-	
EL	250	1993	1994	**225101490**	**225101493**	-	-	
EL Eliminator	250	1988	1989	**225101490**	**225101493**	-	-	
Estrella	250	1992	1992	**225101200**	-	**225101200**	-	
EX R Ninja	250	1986	1987	**225101490**	**225101493**	**225101490**	**225101493**	
EX R Ninja	250	2008	2012	**225101070**	**225101073**	**225101070**	**225101073**	
EX SL Ninja	250	2015	2015	**225101070**	**225101073**	**225101070**	**225101073**	
GPZ	250	1983	1983	**225101490**	**225101493**	-	-	
GPZ Belt Drive	250	1983	1984	**225101200**	-	-	-	
GPZ R	250	1986	1986	**225101490**	**225101493**	**225101490**	**225101493**	
JI	250	1981	1981	-	-	**225101190**	-	
KDX SR	250	1991	1994	**225101420**	**225101423**	**225101790**	-	
KL (KLR 250)	250	1985	1997	**225101200**	-	-	-	
KL Super Sherpa	250	2000	2000	-	-	**225101200**	-	
KLX	250	1993	1996	**225100920**	**225100923**	**225101790**	-	
KLX	250	1998	2007	**225100920**	**225100923**	**225102630**	**225102633**	
KLX	250	2014	2014	**225101420**	**225101423**	**225102630**	**225102633**	
KLX S	250	2009	2009	**225101420**	**225101423**	**225102630**	**225102633**	
KLX SF	250	2009	2009	**225101420**	**225101423**	**225102630**	**225102633**	
KR	250	1985	1985	**225101200**	-	**225101490**	**225101493**	
KR-1 S	250	1990	1990	**225101150**	**225101153**	-	-	
KSF Mojave	250	1987	1987	-	-	**225102850**	**225102853**	
KX	250	1982	1982	**225100040**	-	-	-	
KX	250	1983	1985	**225101200**	-	-	-	
KX	250	1986	1986	**225101200**	-	**225101200**	-	
KX	250	1987	1988	-	-	**225101200**	-	
KX	250	1989	1993	**225101420**	**225101423**	**225101790**	-	
KX	250	1994	1994	**225100920**	**225100923**	**225101790**	-	
KX	250	1995	2008	**225100920**	**225100923**	**225102630**	**225102633**	
KX-F	250	2004	2010	**225100920**	**225100923**	**225101450**	**225101453**	
KX-F DFI	250	2011	2011	**225100920**	**225100923**	**225101450**	**225101453**	
KXF Tecate	250	1987	1988	-	-	**225102850**	**225102853**	
KXT Tecate	250	1984	1984	-	-	**225100040**	-	
KXT Tecate	250	1985	1986	**225101200**	-	**225101200**	-	
KXT Tecate	250	1987	1987	-	-	**225102850**	**225102853**	
LX Eliminator, SE	250	1990	1990	**225101490**	**225101493**	-	-	
SC Epsilon	250	2002	2002	**225100380**	**225100383**	**225100670**	-	
Versys-X	250	2017	2017	**225100870**	**225100873**	**225101070**	**225101073**	
Z A1-A2	250	1979	1980	-	-	**225101190**	-	
Z A3	250	1981	1981	-	-	**225101190**	-	
Z Eliminator	250	1988	1988	**225101490**	**225101493**	-	-	
Z J	250	1981	1981	-	-	**225100720**	**225100723**	
Z SL	250	2015	2015	**225101070**	**225101073**	**225101070**	**225101073**	

Modello *Model*	**CC**	**Da** *From*	**A** *To*	**Anteriore Organica** *Front Organic*	**Anteriore Sinterizzata** *Front Sintered*	**Posteriore Organica** *Rear Organic*	**Posteriore Sinterizzata** *Rear Sintered*	**Note** *Notes*
Z T, Scorpion	250	1989	1989	**225101200**	-	-	-	
ZZR	250	1990	2001	-	-	**225101200**	-	
EL	252	1997	2000	**225101490**	**225101493**	-	-	
EL	252	2001	2001	**225101420**	**225101423**	-	-	
EX R Ninja, ABS	300	2013	2013	**225101070**	**225101073**	**225101070**	**225101073**	
J	300	2014	2014	**225100870**	**225100873**	**225102760**	**225102763**	
KEF Lakota	300	1995	1995	-	-	**225102850**	**225102853**	
KLF Bayou	300	1988	1988	**225101200**	-	-	-	
KLF Bayou	300	1989	2005	**225101070**	**225101073**	-	-	Pinza destra | *Right Caliper*
KLF Bayou	300	1989	2005	**225101420**	**225101423**	-	-	Pinza sinistra | *Left Caliper*
KLX R	300	1997	1997	**225100920**	**225100923**	**225102630**	**225102633**	
KVF Brute Force	300	2013	2013	**225101440**	-	**225103070**	**225103073**	
Z	300	2015	2015	**225101070**	**225101073**	**225101070**	**225101073**	
EX	305	1983	1983	**225101490**	**225101493**	-	-	
GPZ	305	1981	1996	**225101200**	-	-	-	
GPZ	305	1983	1996	**225101490**	**225101493**	-	-	
KLR	350	1985	1985	**225101200**	-	-	-	
KVF Prairie 2x4, 4x4	360	2003	2003	**225101440**	-	-	-	
Eliminator	400	1994	1994	-	-	**225101490**	**225101493**	
EN Twin	400	1985	1985	**225101490**	**225101493**	-	-	
FX R	400	1986	1988	**225101200**	-	**225101490**	**225101493**	
GPZ	400	1985	1987	**225101200**	-	**225101490**	**225101493**	
KFX	400	2002	2002	**225102850**	**225102853**	**225100500**	-	
KLE	400	1991	1991	-	-	**225101200**	-	
KLE Vulcan	400	1990	1990	**225101490**	**225101493**	-	-	
KLF Bayou	400	1993	1999	**225101070**	**225101073**	-	-	Pinza destra | *Right Caliper*
KLF Bayou	400	1993	1999	**225101420**	**225101423**	-	-	Pinza sinistra | *Left Caliper*
KLX R	400	2003	2003	**225100920**	**225100923**	**225102630**	**225102633**	
KLX SR	400	2003	2003	**225100920**	**225100923**	**225102630**	**225102633**	
KVF Prairie	400	1997	1998	**225101440**	-	-	-	
KVF Prairie 2x4	400	1999	1999	**225101440**	-	-	-	
KVF Prairie 4x4	400	1999	1999	**225101440**	-	-	-	
LX Eliminator, SE	400	1990	1990	**225101200**	-	-	-	
Ninja R	400	2011	2011	**225101240**	**225101243**	**225101220**	**225101223**	Pinza sinistra | *Left Caliper*
Ninja R	400	2011	2011	**225101250**	**225101253**	**225101220**	**225101223**	Pinza destra | *Right Caliper*
Z Eliminator	400	1988	1988	**225101490**	**225101493**	**225101490**	**225101493**	
Z F	400	1984	1984	**225101200**	-	-	-	
ZR F	400	1983	1984	**225101200**	-	-	-	
ZR Xanthus (ZR 400D1)	400	1992	1995	-	-	**225101200**	-	
ZX	400	1985	1985	**225101200**	-	**225101490**	**225101493**	
ZX	400	1986	1986	**225101490**	**225101493**	**225101490**	**225101493**	
ZX-4	400	1990	1990	**225101150**	**225101153**	**225100720**	**225100723**	
ZXR	400	1989	1990	**225101150**	**225101153**	**225100720**	**225100723**	
ZXR	400	1991	2002	-	-	**225100720**	**225100723**	
ZZR	400	1990	1994	**225101150**	**225101153**	-	-	
EN	450	1985	1990	**225101490**	**225101493**	-	-	
KFX	450	2007	2007	-	-	**225102850**	**225102853**	
KLX R	450	2007	2007	**225100920**	**225100923**	**225101450**	**225101453**	
KX-F	450	2006	2008	**225100920**	**225100923**	**225101450**	**225101453**	
KX-F DFI	450	2009	2009	**225100920**	**225100923**	**225101450**	**225101453**	
Z LTD	450	1984	1984	**225101490**	**225101493**	-	-	
EN	500	1990	1996	**225101490**	**225101493**	-	-	
EN	500	1998	1998	**225101490**	**225101493**	-	-	
EN Vulcan	500	1996	1997	**225101490**	**225101493**	-	-	

Modello *Model*	**CC**	**Da** *From*	**A** *To*	**Anteriore Organica** *Front Organic*	**Anteriore Sinterizzata** *Front Sintered*	**Posteriore Organica** *Rear Organic*	**Posteriore Sinterizzata** *Rear Sintered*	**Note** *Notes*
ER-5	500	2001	2001	**225101240**	**225101243**	-	-	
EX	500	1994	1996	-	-	**225101200**	-	
EX Ninja	500	1994	1997	-	-	**225101200**	-	
GPZ	500	1993	1995	**225101150**	**225101153**	-	-	
GPZ	500	1995	1996	**225101200**	-	**225101200**	-	
GPZ	500	1997	1997	-	-	**225101200**	-	
GPZ R (Austria)	500	1985	1985	**225101490**	**225101493**	**225101490**	**225101493**	
GPZ S	500	1987	1987	**225101490**	**225101493**	-	-	
GPZ S	500	1988	1988	**225101200**	-	-	-	
GPZ S	500	1989	1992	**225101200**	-	**225101490**	**225101493**	
GPZ S (Austria)	500	1994	1996	-	-	**225101200**	-	
GPZ S (Austria)	500	1997	1997	-	-	**225101200**	-	
KL Tengai (Austria)	500	1989	1991	-	-	**225101200**	-	
KLE	500	1991	1991	-	-	**225101200**	-	
KLR (Austria)	500	1987	1988	-	-	**225101200**	-	
KX	500	1983	1985	**225101200**	-	-	-	
KX	500	1986	1986	**225101200**	-	**225101200**	-	
KX	500	1987	1988	-	-	**225101200**	-	
KX	500	1989	1993	**225101420**	**225101423**	**225101790**	-	
KX	500	1994	1995	**225100920**	**225100923**	**225101790**	-	
KX	500	1996	1996	**225100920**	**225100923**	**225102630**	**225102633**	
ZL (Austria)	500	1985	1985	**225101490**	**225101493**	-	-	
ZR (Z 500 F)	500	1983	1983	**225101200**	-	-	-	
ZZR (Austria)	500	1990	1992	**225101150**	**225101153**	-	-	
ZZR (Austria)	500	1993	1993	**225101150**	**225101153**	**225101220**	**225101223**	
GPZ	550	1984	1987	**225101490**	**225101493**	**225101490**	**225101493**	
GT	550	1985	2001	**225101490**	**225101493**	-	-	
KX A	550	1983	1983	**225101200**	-	-	-	
Z F	550	1983	1983	**225101200**	-	-	-	
Z F	550	1985	1985	**225101490**	**225101493**	-	-	
Z GT	550	1983	1983	**225101200**	-	-	-	
ZR A1, GP	550	1983	1984	**225101200**	-	-	-	
ZR Zephyr	550	1993	1999	-	-	**225101220**	**225101223**	
ZR Zephyr (D) from VIN B024010-	550	1993	2001	-	-	**225101220**	**225101223**	
ZX	550	1984	1984	**225101490**	**225101493**	**225101490**	**225101493**	
GPZ R	600	1985	1989	**225101490**	**225101493**	**225101490**	**225101493**	
KL	600	1984	1986	**225101200**	-	-	-	
KLR	600	1984	1986	**225101200**	-	-	-	
KLR E	600	1985	1994	**225101200**	-	-	-	
R, Ninja	600	1989	1989	**225101150**	**225101153**	**225100720**	**225100723**	
Z GP	600	1983	1983	**225101490**	**225101493**	**225101490**	**225101493**	
ZL	600	1985	1985	**225101490**	**225101493**	-	-	
ZX Ninja	600	1985	1987	**225101490**	**225101493**	**225101490**	**225101493**	
ZX-6R (Ninja ZX6)	600	1993	1997	**225101150**	**225101153**	**225101220**	**225101223**	
ZX-6R (Ninja ZX6R)	600	1995	1997	**225101150**	**225101153**	**225101220**	**225101223**	
ZX-6R (ZX6)	600	1990	1993	**225101150**	**225101153**	-	-	
ZX-6R Ninja	600	1998	2001	**225101170**	**225101173**	**225101220**	**225101223**	
ZX-6R Ninja	600	2007	2007	-	**225102943**	**225101220**	**225101223**	Pinza radiale | *Radial Caliper*
ZX-6RR Ninja	600	2003	2006	-	**225102983**	**225101220**	**225101223**	Pinza radiale | *Radial Caliper*
ZZR	600	1990	1992	**225101150**	**225101153**	-	-	
ZZR	600	1993	2005	**225101150**	**225101153**	**225101220**	**225101223**	
ZX-6R Ninja	636	2002	2002	**225101170**	**225101173**	**225101220**	**225101223**	
ZX-6R Ninja	636	2003	2006	-	**225102983**	**225101220**	**225101223**	Pinza radiale | *Radial Caliper*
ZX-6R Ninja	636	2013	2013	-	-	**225102930**	**225102933**	Pinza radiale | *Radial Caliper*

Modello *Model*	**CC**	**Da** *From*	**A** *To*	**Anteriore Organica** *Front Organic*	**Anteriore Sinterizzata** *Front Sintered*	**Posteriore Organica** *Rear Organic*	**Posteriore Sinterizzata** *Rear Sintered*	**Note** *Notes*
EN Vulcan S	650	2015	2015	**225100970**	**225100973**	**225100930**	**225100933**	
EN Vulcan S Cafe	650	2017	2017	**225100970**	**225100973**	**225100930**	**225100933**	
EN Vulcan S SE	650	2017	2017	**225100970**	**225100973**	**225100930**	**225100933**	
ER-6f	650	2006	2006	**225101240**	**225101243**	**225101220**	**225101223**	Pinza sinistra | *Left Caliper*
ER-6f	650	2006	2006	**225101250**	**225101253**	**225101220**	**225101223**	Pinza destra | *Right Caliper*
ER-6n	650	2006	2016	**225101240**	**225101243**	**225101220**	**225101223**	Pinza sinistra | *Left Caliper*
ER-6n	650	2006	2016	**225101250**	**225101253**	**225101220**	**225101223**	Pinza destra | *Right Caliper*
KLE Versys	650	2007	2014	**225101240**	**225101243**	**225101220**	**225101223**	Pinza sinistra | *Left Caliper*
KLE Versys	650	2007	2014	**225101250**	**225101253**	**225101220**	**225101223**	Pinza destra | *Right Caliper*
KLE Versys	650	2015	2015	**225100870**	**225100873**	**225103520**	**225103323**	
KLE Versys LT	650	2015	2015	**225100870**	**225100873**	**225103520**	**225103323**	
KLR	650	1987	2007	-	-	**225101200**	-	
KLR	650	1995	2004	**225101240**	**225101243**	**225101200**	-	
KLR	650	2008	2008	**225101420**	**225101423**	**225101070**	**225101073**	
KLR Tengai	650	1989	1992	-	-	**225101200**	-	
KLX	650	1993	1996	**225100920**	**225100923**	**225101790**	-	
KLX R	650	1993	1995	**225100920**	**225100923**	**225101790**	-	
KLX R D1	650	1996	1996	**225100920**	**225100923**	**225102630**	**225102633**	
KVF Brute Force 4x4i	650	2005	2005	**225101070**	**225101073**	-	-	Pinza destra | *Right Caliper*
KVF Brute Force 4x4i	650	2005	2005	**225101420**	**225101423**	-	-	Pinza sinistra | *Left Caliper*
Ninja	650	2017	2017	**225100970**	**225100973**	**225100930**	**225100933**	
W	650	1999	1999	**225101250**	**225101253**	-	-	
Z	650	2017	2017	**225100870**	**225100873**	**225100930**	**225100933**	
VN Vulcan	700	1985	1985	**225101490**	**225101493**	-	-	
ZN	700	1984	1984	**225101490**	**225101493**	**225101490**	**225101493**	
GPZ	750	1983	1987	**225101490**	**225101493**	**225101490**	**225101493**	
GPZ R	750	1985	1986	**225101490**	**225101493**	**225101490**	**225101493**	
GPZ T	750	1983	1983	**225101490**	**225101493**	**225101490**	**225101493**	
GT	750	1986	1986	**225101490**	**225101493**	**225101490**	**225101493**	
KRF Teryx 4x4	750	2008	2008	**225101070**	**225101073**	-	-	Pinza destra | *Right Caliper*
KRF Teryx 4x4	750	2008	2008	**225101420**	**225101423**	-	-	Pinza sinistra | *Left Caliper*
KVF Brute Force 4x4i	750	2005	2005	**225101070**	**225101073**	-	-	Pinza destra | *Right Caliper*
KVF Brute Force 4x4i	750	2005	2005	**225101420**	**225101423**	-	-	Pinza sinistra | *Left Caliper*
VN Vulcan	750	1986	1994	**225101490**	**225101493**	-	-	
Vulcan	750	1993	1993	**225101490**	**225101493**	-	-	
VZ Twin	750	1988	1988	**225101490**	**225101493**	-	-	
Z	750	1983	1984	**225101490**	**225101493**	-	-	
Z	750	2004	2006	**225101240**	**225101243**	**225101220**	**225101223**	Pinza sinistra | *Left Caliper*
Z	750	2004	2006	**225101250**	**225101253**	**225101220**	**225101223**	Pinza destra | *Right Caliper*
Z ABS	750	2007	2012	**225100870**	**225100873**	**225100930**	**225100933**	
Z Eliminator	750	1988	1988	**225101490**	**225101493**	**225101490**	**225101493**	
Z LTD Twin	750	1983	1983	**225101490**	**225101493**	**225101490**	**225101493**	
Z R	750	2011	2012	-	**225102943**	**225103520**	**225103323**	
Z S	750	2005	2006	**225101240**	**225101243**	**225101220**	**225101223**	Pinza sinistra | *Left Caliper*
Z S	750	2005	2006	**225101250**	**225101253**	**225101220**	**225101223**	Pinza destra | *Right Caliper*
Z Turbo	750	1984	1984	**225101490**	**225101493**	**225101490**	**225101493**	
ZR Zephyr	750	1996	1996	**225101240**	**225101243**	-	-	Pinza sinistra | *Left Caliper*
ZR Zephyr	750	1996	1996	**225101250**	**225101253**	-	-	Pinza destra | *Right Caliper*
ZR-7	750	1999	1999	**225101240**	**225101243**	**225101250**	**225101253**	Pinza sinistra | *Left Caliper*
ZR-7	750	1999	1999	**225101250**	**225101253**	**225101250**	**225101253**	Pinza destra | *Right Caliper*
ZR-7S	750	2001	2001	**225101240**	**225101243**	**225101250**	**225101253**	Pinza sinistra | *Left Caliper*
ZR-7S	750	2001	2001	**225101250**	**225101253**	**225101250**	**225101253**	Pinza destra | *Right Caliper*
ZX E, GP	750	1983	1985	**225101490**	**225101493**	**225101490**	**225101493**	
ZX-7R Ninja	750	1989	1995	**225101150**	**225101153**	**225100720**	**225100723**	

Modello *Model*	**CC**	**Da** *From*	**A** *To*	RMS YOUR BEST PARTNER **Anteriore Organica** *Front Organic*	SINTER **Anteriore Sinterizzata** *Front Sintered*	RMS YOUR BEST PARTNER **Posteriore Organica** *Rear Organic*	SINTER **Posteriore Sinterizzata** *Rear Sintered*	**Note** *Notes*
ZX-7R Ninja	750	1996	2003	**225101170**	**225101173**	**225100720**	**225100723**	
ZX-7RR Ninja	750	1996	2002	-	-	**225103110**	**225103113**	
ZXR R	750	1989	1995	**225101150**	**225101153**	**225100720**	**225100723**	
KRF Teryx BEF/CEF/DEF	800	2014	2014	**225101070**	**225101073**	-	-	Pinza destra | *Right Caliper*
KRF Teryx BEF/CEF/DEF	800	2014	2014	**225101420**	**225101423**	-	-	Pinza sinistra | *Left Caliper*
KRT Teryx 4 BEF/CEF/DEF	800	2014	2014	**225101070**	**225101073**	-	-	Pinza destra | *Right Caliper*
KRT Teryx 4 BEF/CEF/DEF	800	2014	2014	**225101420**	**225101423**	-	-	Pinza sinistra | *Left Caliper*
Mule Pro FX	800	2015	2015	**225101070**	**225101073**	-	-	Pinza destra | *Right Caliper*
Mule Pro FX	800	2015	2015	**225101420**	**225101423**	-	-	Pinza sinistra | *Left Caliper*
VN Classic	800	1998	1998	**225101240**	**225101243**	-	-	
VN Drifter	800	1999	2002	**225101240**	**225101243**	**225101250**	**225101253**	
VN Vulcan,Classic	800	1995	1995	**225101490**	**225101493**	-	-	
W	800	2011	2011	**225101250**	**225101253**	-	-	
Z	800	2013	2016	-	**225102993**	**225103520**	**225103323**	
Z ABS	800	2013	2016	-	**225102993**	**225103520**	**225103323**	
Z e	800	2013	2013	**225100870**	**225100873**	**225103520**	**225103323**	
Z e ABS	800	2013	2016	-	**225102993**	**225103520**	**225103323**	
GPZ R	900	1984	1989	**225101490**	**225101493**	**225101490**	**225101493**	
GPZ R	900	1990	1996	**225101150**	**225101153**	-	-	
VN Classic	900	2006	2006	**225101240**	**225101243**	**225101250**	**225101253**	
VN Classic SE	900	2011	2011	**225101240**	**225101243**	**225101250**	**225101253**	
VN Custom	900	2007	2007	**225101240**	**225101243**	**225101250**	**225101253**	
Z	900	2017	2017	-	**225102993**	**225103520**	**225103323**	
ZL Eliminator	900	1985	1986	**225101490**	**225101493**	**225101490**	**225101493**	
ZX	900	1983	1984	**225101490**	**225101493**	**225101490**	**225101493**	
ZX-9R Ninja	900	1994	1995	**225101150**	**225101153**	**225101220**	**225101223**	
ZX-9R Ninja	900	1996	2001	**225101170**	**225101173**	**225101220**	**225101223**	
ZX-9R Ninja	900	2002	2003	-	**225102993**	**225101220**	**225101223**	
GPZ RX	1000	1986	1986	**225101490**	**225101493**	**225101490**	**225101493**	
GTR	1000	1986	1993	**225101490**	**225101493**	**225101490**	**225101493**	
GTR	1000	1994	2006	-	-	**225101490**	**225101493**	
H2 Carbon Ninja	1000	2017	2017	-	**225102923**	**225100490**	**225100493**	
H2 Ninja	1000	2015	2015	-	**225102923**	**225100490**	**225100493**	
H2R Ninja	1000	2015	2015	-	**225102923**	**225100490**	**225100493**	
KLV	1000	2004	2007	**225101240**	**225101243**	**225100930**	**225100933**	Pinza sinistra | *Left Caliper*
KLV	1000	2004	2007	**225101250**	**225101253**	**225100930**	**225100933**	Pinza destra | *Right Caliper*
Versys	1000	2012	2012	**225101150**	**225101153**	**225100930**	**225100933**	
Versys LT	1000	2015	2015	**225101150**	**225101153**	**225100930**	**225100933**	
Z	1000	2003	2006	-	**225102993**	**225101220**	**225101223**	
Z	1000	2007	2009	-	**225102943**	**225100930**	**225100933**	
Z	1000	2010	2013	**225102960**	**225102963**	**225100930**	**225100933**	Pinza radiale | *Radial Caliper*
Z	1000	2014	2014	**225102960**	**225102963**	**225101220**	**225101223**	Pinza radiale | *Radial Caliper*
Z R	1000	2017	2017	-	**225102923**	**225101220**	**225101223**	
Z R Ninja	1000	1986	1986	**225101490**	**225101493**	**225101490**	**225101493**	
Z SE	1000	2014	2014	**225102960**	**225102963**	**225101220**	**225101223**	Pinza radiale | *Radial Caliper*
Z SX	1000	2011	2016	**225102960**	**225102963**	**225101220**	**225101223**	Pinza radiale | *Radial Caliper*
Z SX	1000	2017	2017	**225102960**	**225102963**	**225101220**	**225101223**	Pinza radiale | *Radial Caliper*
ZL	1000	1986	1986	**225101490**	**225101493**	**225101490**	**225101493**	
ZX-10R Ninja	1000	2004	2007	-	**225102983**	**225101220**	**225101223**	Pinza radiale | *Radial Caliper*
ZX-10R Ninja	1000	2008	2008	**225102960**	**225102963**	**225101220**	**225101223**	Pinza radiale | *Radial Caliper*
ZX-10R Ninja	1000	2011	2015	**225102960**	**225102963**	**225102930**	**225102933**	Pinza radiale | *Radial Caliper*
ZX-10R Ninja	1000	2016	2016	-	**225102923**	**225102930**	**225102933**	Pinza radiale | *Radial Caliper*
ZX-10RR Ninja	1000	2017	2017	-	**225102923**	**225102930**	**225102933**	Pinza radiale | *Radial Caliper*
GPZ	1100	1983	1983	**225101490**	**225101493**	**225101490**	**225101493**	

Modello *Model*	**CC**	**Da** *From*	**A** *To*	RMS YOUR BEST PARTNER **Anteriore Organica** *Front Organic*	SINTER **Anteriore Sinterizzata** *Front Sintered*	RMS YOUR BEST PARTNER **Posteriore Organica** *Rear Organic*	SINTER **Posteriore Sinterizzata** *Rear Sintered*	**Note** *Notes*
GPZ (ZX 1100)	1100	1995	1999	**225101240**	**225101243**	**225101220**	**225101223**	Pinza sinistra | *Left Caliper*
GPZ (ZX 1100)	1100	1995	1999	**225101250**	**225101253**	**225101220**	**225101223**	Pinza destra | *Right Caliper*
GPZ ABS, Horizont	1100	1997	1997	**225101250**	**225101253**	-	-	Pinza destra | *Right Caliper*
Z GP	1100	1983	1983	**225101490**	**225101493**	**225101490**	**225101493**	
Z LTD	1100	1985	1985	**225101490**	**225101493**	**225101490**	**225101493**	
Z R, LTD	1100	1984	1984	**225101490**	**225101493**	**225101490**	**225101493**	
Zephyr	1100	1997	1997	**225101240**	**225101243**	-	-	Pinza sinistra | *Left Caliper*
Zephyr	1100	1997	1997	**225101250**	**225101253**	-	-	Pinza destra | *Right Caliper*
ZN LTD	1100	1984	1984	**225101490**	**225101493**	**225101490**	**225101493**	
ZR Zephyr	1100	1992	1995	**225101150**	**225101153**	-	-	
ZRX	1100	1996	2000	**225101170**	**225101173**	**225100720**	**225100723**	
ZX	1100	1993	1997	**225101150**	**225101153**	**225100720**	**225100723**	
ZX GP	1100	1983	1983	**225101490**	**225101493**	**225101490**	**225101493**	
ZZR	1100	1990	1993	**225101150**	**225101153**	-	-	
ZZR	1100	1994	2001	**225101150**	**225101153**	**225100720**	**225100723**	
ZZR GT (ZX 1100 D)	1100	1993	1993	-	-	**225101190**	-	
ZG Voyager XII	1200	1986	1986	**225101490**	**225101493**	**225101490**	**225101493**	
ZRX	1200	2001	2001	**225101170**	**225101173**	**225100720**	**225100723**	
ZRX R	1200	2001	2001	**225101170**	**225101173**	**225100720**	**225100723**	
ZRX S	1200	2001	2001	**225101170**	**225101173**	**225100720**	**225100723**	
ZX-12R Ninja	1200	2000	2003	**225101170**	**225101173**	**225100720**	**225100723**	
ZX-12R Ninja	1200	2004	2006	-	**225102983**	**225100720**	**225100723**	Pinza radiale | *Radial Caliper*
ZZR	1200	2002	2002	**225101150**	**225101153**	**225100720**	**225100723**	
Z	1300	1985	1985	**225101490**	**225101493**	**225101490**	**225101493**	
ZN	1300	1983	1984	**225101490**	**225101493**	**225101490**	**225101493**	
ZN Voy.	1300	1985	1985	**225101490**	**225101493**	**225101490**	**225101493**	
GTR	1400	2007	2007	-	**225102943**	**225103110**	**225103113**	Pinza radiale | *Radial Caliper*
ZZR	1400	2006	2014	-	**225102943**	**225103110**	**225103113**	Pinza radiale | *Radial Caliper*
ZZR Performance Sport	1400	2017	2017	-	**225102923**	**225103110**	**225103113**	
ZZR SE	1400	2016	2016	-	**225102923**	**225103110**	**225103113**	
VN Classic	1500	1997	1997	**225101240**	**225101243**	**225101490**	**225101493**	
VN Classic Fi	1500	2000	2000	**225101240**	**225101243**	**225101250**	**225101253**	
VN Classic Tourer	1500	1998	1998	**225101240**	**225101243**	**225101490**	**225101493**	Pinza sinistra | *Left Caliper*
VN Classic Tourer	1500	1998	1998	**225101250**	**225101253**	**225101490**	**225101493**	Pinza destra | *Right Caliper*
VN Classic Tourer Fi	1500	2000	2000	**225101240**	**225101243**	**225101250**	**225101253**	Pinza sinistra | *Left Caliper*
VN Classic Tourer Fi	1500	2000	2000	**225101250**	**225101253**	**225101250**	**225101253**	Pinza destra | *Right Caliper*
VN Drifter	1500	1999	2002	**225101240**	**225101243**	**225101250**	**225101253**	
VN Mean Streak	1500	2002	2003	**225101170**	**225101173**	**225101250**	**225101253**	
VN Sumo	1500	1988	1988	**225101490**	**225101493**	**225101490**	**225101493**	
VN Vulcan	1500	1987	1987	**225101490**	**225101493**	**225101490**	**225101493**	
VN Vulcan, SE	1500	1987	1992	**225101490**	**225101493**	**225101490**	**225101493**	
VN Classic	1600	2003	2003	**225101240**	**225101243**	**225101250**	**225101253**	Pinza sinistra | *Left Caliper*
VN Classic	1600	2003	2003	**225101250**	**225101253**	**225101250**	**225101253**	Pinza destra | *Right Caliper*
VN Mean Streak	1600	2004	2004	**225101170**	**225101173**	**225101250**	**225101253**	
VN Mean Streak	1600	2005	2005	-	**225102983**	**225101250**	**225101253**	
VN Classic	1700	2009	2009	**225101240**	**225101243**	**225101250**	**225101253**	Pinza sinistra | *Left Caliper*
VN Classic	1700	2009	2009	**225101250**	**225101253**	**225101250**	**225101253**	Pinza destra | *Right Caliper*
VN Classic Tourer	1700	2009	2009	**225101240**	**225101243**	**225101250**	**225101253**	Pinza sinistra | *Left Caliper*
VN Classic Tourer	1700	2009	2009	**225101250**	**225101253**	**225101250**	**225101253**	Pinza destra | *Right Caliper*
VN Voyager	1700	2009	2009	**225101150**	**225101153**	**225101250**	**225101253**	
VN	2000	2004	2004	**225101150**	**225101153**	**225101250**	**225101253**	
KEEWAY								
Flash	50	2007	2007	**225100040**	-	**225120061**	-	
Flash Electric	50	2010	2010	-	-	**225120061**	-	

Modello *Model*	**CC**	**Da** *From*	**A** *To*	RMS YOUR BEST PARTNER **Anteriore Organica** *Front Organic*	SINTER **Anteriore Sinterizzata** *Front Sintered*	RMS YOUR BEST PARTNER **Posteriore Organica** *Rear Organic*	SINTER **Posteriore Sinterizzata** *Rear Sintered*	**Note** *Notes*
F-NKD	50	2010	2010	-	-	**225120061**	-	
Hurricane	50	2006	2006	**225100040**	-	**225120061**	-	
Matrix	50	2006	2006	-	-	**225120061**	-	
RY8	50	2007	2009	-	-	**225120061**	-	
RY8	50	2010	2010	-	-	**225102590**	**225102593**	
TX SM	50	2010	2010	**225100560**	-	-	-	
Hurricane	90	2006	2006	**225100040**	-	-	-	
Partner	100	2006	2006	**225100350**	**225100353**	-	-	
Partner	110	2006	2006	**225100350**	**225100353**	-	-	
Arn	125	2006	2006	**225100190**	**225100193**	-	-	
Enduro	125	2007	2007	**225100360**	**225100363**	**225100010**	**225100013**	
Speed	125	2006	2006	**225100030**	-	**225100350**	**225100353**	
Superlight	125	2006	2006	**225100580**	**225100583**	-	-	
TX SM	125	2010	2010	**225100560**	-	-	-	
X-Ray	125	2007	2007	**225100360**	**225100363**	**225100010**	**225100013**	
Arn	150	2006	2006	**225100190**	**225100193**	-	-	
Speed	150	2006	2006	**225100030**	-	**225100350**	**225100353**	
Superlight	150	2006	2006	**225100580**	**225100583**	-	-	
Land Cruiser	250	2006	2006	**225100580**	**225100583**	-	-	
Supershadow	250	2006	2006	**225100410**	**225100413**	-	-	
KREIDLER								
Florett XL	25	1999	1999	**225102800**	-	-	-	
Florett	50	1999	1999	**225102800**	-	**225120061**	-	
Enduro	125	2007	2007	**225100580**	**225100583**	-	-	
Florett D	125	2007	2007	**225101070**	**225101073**	-	-	
Florett RMC-F	125	2007	2007	**225101070**	**225101073**	-	-	
Mustang	125	1983	1983	-	-	**225100010**	**225100013**	
Supermoto	125	2007	2007	**225100580**	**225100583**	-	-	
Enduro	200	2007	2007	**225100580**	**225100583**	-	-	
KTM								
GO	50	1994	1994	**225100070**	-	-	-	
GP DXL, RS1	50	-	-	**225100010**	**225100013**	-	-	
GXE	50	1987	1987	**225100010**	**225100013**	-	-	
MX	50	1987	1987	**225100010**	**225100013**	-	-	
RSV	50	1986	1986	**225100010**	**225100013**	-	-	
SM Supermoto	50	2006	2006	**225103220**	**225103223**	**225103220**	**225103223**	
SX Pro Junior LC	50	2002	2002	**225103220**	**225103223**	-	-	
SX Pro Senior LC	50	2002	2003	**225103220**	**225103223**	-	-	
SX Pro Senior LC	50	2004	2004	**225103220**	**225103223**	**225103220**	**225103223**	
SX Senior Adventure	50	2004	2004	**225103220**	**225103223**	-	-	
X-1	50	1998	1998	-	-	**225120061**	-	
SX	60	1999	1999	**225100080**	**225100083**	-	-	
SX	65	2000	2001	**225100080**	**225100083**	-	-	
SX	65	2004	2008	-	-	**225103220**	**225103223**	
PL Watercooled	80	-	-	**225100010**	**225100013**	**225100010**	**225100013**	
RLW	80	1980	1980	**225100010**	**225100013**	**225100010**	**225100013**	
RSL, L, RS, RL, Bora, Chopper	80	1980	1980	**225100010**	**225100013**	**225100010**	**225100013**	
MX	85	1990	1990	**225100010**	**225100013**	-	-	
SX	85	2011	2011	-	-	**225103530**	**225103533**	
SX	85	2011		-	-	**225103530**	**225103533**	
SX	85	2012	2012	-	**225103543**	**225103530**	**225103533**	
SX (Ruota 19"/16")	85	2013	2013	-	**225103543**	**225103530**	**225103533**	
Duke	125	2011	2011	**225103310**	**225103313**	**225101330**	**225101333**	
EXC Enduro	125	1999	2003	**225100430**	-	**225101330**	**225101333**	

Modello *Model*	**CC**	**Da** *From*	**A** *To*	RMS YOUR BEST PARTNER **Anteriore Organica** *Front Organic*	SINTER **Anteriore Sinterizzata** *Front Sintered*	RMS YOUR BEST PARTNER **Posteriore Organica** *Rear Organic*	SINTER **Posteriore Sinterizzata** *Rear Sintered*	**Note** *Notes*
EXC Enduro	125	2004	2004	**225100430**	-	**225100750**	**225100753**	
EXE	125	2000	2000	**225100430**	-	**225101330**	**225101333**	
GS	125	1989	1990	**225101200**	-	**225101200**	-	
GS	125	1992	1997	**225100430**	-	**225101200**	-	
LC	125	1985	1985	**225100010**	**225100013**	-	-	
LC	125	1986	1986	**225100010**	**225100013**	**225100010**	**225100013**	
LC2	125	1999	1999	**225100430**	-	**225101330**	**225101333**	
MX	125	1985	1985	**225100010**	**225100013**	-	-	
MX	125	1986	1986	**225100010**	**225100013**	**225100010**	**225100013**	
MX	125	1989	1990	**225101200**	-	-	-	
MX	125	1992	1993	**225100430**	-	-	-	
RC	125	2014	2014	**225103310**	**225103313**	**225101330**	**225101333**	
Sting	125	1999	1999	**225100520**	**225100523**	**225101330**	**225101333**	
SuperMoto	125	2000	2000	**225100430**	-	**225101330**	**225101333**	
SX	125	1996	2003	**225100430**	-	**225101330**	**225101333**	
SX	125	2004	2004	**225100430**	-	**225100750**	**225100753**	
XC	125	1985	1985	**225100010**	**225100013**	-	-	
XC	125	1986	1986	**225100010**	**225100013**	**225100010**	**225100013**	
SX	144	2007	2008	**225100430**	-	**225100750**	**225100753**	
SX	150	2009	2009	**225100430**	-	**225100750**	**225100753**	
Duke	200	2012	2012	**225103310**	**225103313**	**225101330**	**225101333**	
EXC Enduro	200	1999	2003	**225100430**	-	**225101330**	**225101333**	
EXC Enduro	200	2004	2004	**225100430**	-	**225100750**	**225100753**	
RC	200	2014	2014	**225103310**	**225103313**	**225101330**	**225101333**	
SX	200	2003	2004	**225100430**	-	**225100750**	**225100753**	
Baja	250	1986	1986	**225100010**	**225100013**	-	-	
EXC Enduro	250	1999	2003	**225100430**	-	**225101330**	**225101333**	
EXC Enduro	250	2004	2004	**225100430**	-	**225100750**	**225100753**	
EXC Enduro 4T	250	1999	2003	**225100430**	-	**225101330**	**225101333**	
EXC Enduro 4T	250	2004	2006	**225100430**	-	**225100750**	**225100753**	
EXC-F Enduro	250	2007	2007	**225100430**	-	**225100750**	**225100753**	
Freeride R	250	2014	2014	-	**225103543**	**225103530**	**225103533**	
GS	250	1989	1990	**225101200**	-	**225101200**	-	
LC	250	1985	1985	**225100010**	**225100013**	-	-	
LC	250	1986	1986	**225100010**	**225100013**	**225100010**	**225100013**	
MC	250	1983	1984	**225100010**	**225100013**	**225100010**	**225100013**	
MX	250	1983	1984	**225100010**	**225100013**	**225100010**	**225100013**	
MX	250	1985	1985	**225100010**	**225100013**	-	-	
MX	250	1986	1986	**225100010**	**225100013**	**225100010**	**225100013**	
MX	250	1989	1990	**225101200**	-	-	-	
MX	250	1992	1993	**225100430**	-	-	-	
MX VC, Enduro	250	1987	1987	**225100530**	**225100533**	**225100530**	**225100533**	
SX	250	1996	2002	**225100430**	-	**225101330**	**225101333**	
SX	250	2003	2003	**225100430**	-	**225100750**	**225100753**	
SX-F	250	2006	2006	**225100430**	-	**225100750**	**225100753**	
XC	250	1985	1985	**225100010**	**225100013**	-	-	
XC	250	1986	1989	**225100010**	**225100013**	**225100010**	**225100013**	
EXC	300	1993	1996	**225100430**	-	**225101200**	-	
EXC Enduro	300	1999	2003	**225100430**	-	**225101330**	**225101333**	
EXC Enduro	300	2004	2004	**225100430**	-	**225100750**	**225100753**	
MX	300	1990	1990	**225101200**	-	**225101200**	-	
MX	300	1992	1992	**225100430**	-	**225101200**	-	
XC	300	1985	1985	**225100010**	**225100013**	-	-	
XC	300	1986	1990	**225100010**	**225100013**	**225100010**	**225100013**	

Modello *Model*	**CC**	**Da** *From*	**A** *To*	RMS YOUR BEST PARTNER **Anteriore Organica** *Front Organic*	SINTER **Anteriore Sinterizzata** *Front Sintered*	RMS YOUR BEST PARTNER **Posteriore Organica** *Rear Organic*	SINTER **Posteriore Sinterizzata** *Rear Sintered*	**Note** *Notes*
Country Cross	350	1985	1985	**225100010**	**225100013**	-	-	
EXC	350	1987	1987	**225100530**	**225100533**	**225100530**	**225100533**	
EXC-F	350	2011	2011	**225100430**	-	**225100750**	**225100753**	
Freeride	350	2012	2012	-	**225103543**	**225103530**	**225103533**	
GS	350	1983	1983	**225100010**	**225100013**	-	-	
GS	350	1987	1987	**225100530**	**225100533**	**225100530**	**225100533**	
GS4 500 K4	350	1983	1983	**225100010**	**225100013**	-	-	
K4 500 K4	350	1983	1983	**225100010**	**225100013**	-	-	
LC4	350	1992	1992	**225101200**	-	**225101200**	-	
MX	350	1987	1987	**225100530**	**225100533**	**225100530**	**225100533**	
SX-F	350	2011	2011	**225100430**	-	**225100750**	**225100753**	
XC MC	350	1983	1983	**225100010**	**225100013**	-	-	
MX	360	1996	1997	**225100430**	-	**225101330**	**225101333**	
SX	360	1996	1997	**225100430**	-	**225101330**	**225101333**	
XC	360	1996	1997	**225100430**	-	**225101330**	**225101333**	
EXC Enduro	380	1999	1999	**225100430**	-	**225101330**	**225101333**	
MX	380	1998	1998	**225100430**	-	**225101330**	**225101333**	
SX	380	1998	2002	**225100430**	-	**225101330**	**225101333**	
XC	380	1998	1998	**225100430**	-	**225101330**	**225101333**	
Duke	390	2013	2013	**225103310**	**225103313**	**225101330**	**225101333**	
GS	390	1983	1983	**225100010**	**225100013**	-	-	
RC	390	2014	2014	**225103310**	**225103313**	**225101330**	**225101333**	
XC , MC	390	1983	1983	**225100010**	**225100013**	-	-	
Enduro	400	1987	1987	**225100530**	**225100533**	**225100530**	**225100533**	
EXC Racing	400	2000	2003	**225100430**	-	**225101330**	**225101333**	
EXC Racing	400	2004	2004	**225100430**	-	**225100750**	**225100753**	
LC4	400	1993	2002	**225100430**	-	**225101200**	-	
LC4-E Enduro	400	1999	2002	**225100430**	-	**225101330**	**225101333**	
SC	400	1999	1999	**225100430**	-	**225101330**	**225101333**	
SX Racing	400	2000	2002	**225100430**	-	**225101330**	**225101333**	
SXC Tiainen Replica	400	1999	2000	**225100430**	-	**225101330**	**225101333**	
XC MC	420	1983	1983	**225100010**	**225100013**	-	-	
EXC Racing	450	2004	2004	**225100430**	-	**225100750**	**225100753**	
Rally	450	2011	2011	**225101010**	**225101013**	**225101330**	**225101333**	
SX SM Factory Replica	450	2004	2004	**225100520**	**225100523**	**225100750**	**225100753**	
SX SMR	450	2004	2006	-	-	**225100750**	**225100753**	
SX SMR	450	2007	2012	-	-	**225100750**	**225100753**	
SX SMR	450	2013	2013	-	**225102923**	**225100750**	**225100753**	
SX-F	450	2003	2003	**225100430**	-	**225100750**	**225100753**	
XC-F	450	2006	2006	**225100430**	-	**225100750**	**225100753**	
MC Leleu	495	1982	1983	**225100010**	**225100013**	-	-	
MX Leleu	495	1982	1983	**225100010**	**225100013**	-	-	
GS 500 K4 Enduro	500	1983	1983	**225100010**	**225100013**	-	-	
LC	500	1985	1985	**225100010**	**225100013**	-	-	
LC	500	1986	1986	**225100010**	**225100013**	**225100010**	**225100013**	
MX	500	1985	1985	**225100010**	**225100013**	-	-	
MX	500	1986	1986	**225100010**	**225100013**	**225100010**	**225100013**	
MX	500	1987	1987	**225100530**	**225100533**	**225100530**	**225100533**	
MX	500	1989	1991	**225101200**	-	-	-	
MX	500	1992	1993	**225100430**	-	-	-	
XC MC	500	1983	1983	**225100010**	**225100013**	-	-	
SX Racing	505	2007	2007	**225100430**	-	**225100750**	**225100753**	
XC-F	505	2008	2009	**225100430**	-	**225100750**	**225100753**	
EXC Racing	520	2000	2002	**225100430**	-	**225101330**	**225101333**	

Modello *Model*	**CC**	**Da** *From*	**A** *To*	RMS YOUR BEST PARTNER **Anteriore Organica** *Front Organic*	SINTER **Anteriore Sinterizzata** *Front Sintered*	RMS YOUR BEST PARTNER **Posteriore Organica** *Rear Organic*	SINTER **Posteriore Sinterizzata** *Rear Sintered*	**Note** *Notes*
SX-F Racing	520	2000	2002	**225100430**	-	**225101330**	**225101333**	
EXC Racing	525	2003	2003	**225100430**	-	**225101330**	**225101333**	
EXC Racing	525	2004	2004	**225100430**	-	**225100750**	**225100753**	
SX SMR	525	2004	2004	-	-	**225100750**	**225100753**	
SX-F Racing	525	2003	2003	**225100430**	-	**225101330**	**225101333**	
SX-F Racing	525	2004	2006	**225100430**	-	**225100750**	**225100753**	
EXC Racing	530	2008	2008	**225100430**	-	**225100750**	**225100753**	
SXC Tiainen Replica	540	1999	2000	**225100430**	-	**225101330**	**225101333**	
LC4	550	1987	1987	**225100530**	**225100533**	**225100530**	**225100533**	
MX	550	1987	1987	**225100530**	**225100533**	**225100530**	**225100533**	
SX SMR	560	2006	2006	-	-	**225100750**	**225100753**	
4T Enduro	600	1984	1984	**225100010**	**225100013**	-	-	
Duke	600	1993	1995	**225100520**	**225100523**	-	-	
EXC	600	1987	1987	**225100530**	**225100533**	**225100530**	**225100533**	
GS	600	1985	1985	**225100010**	**225100013**	-	-	
LC4	600	1988	1988	**225100530**	**225100533**	**225100530**	**225100533**	
LC4 Enduro	600	1988	1988	**225100530**	**225100533**	**225100530**	**225100533**	
LC4 Six Days	600	1992	1992	**225100430**	-	**225101200**	-	
MC	600	1988	1988	**225100530**	**225100533**	**225100530**	**225100533**	
MX	600	1987	1987	**225100530**	**225100533**	**225100530**	**225100533**	
XC Cross	600	1985	1985	**225100010**	**225100013**	-	-	
XCE Cross	600	1985	1985	**225100010**	**225100013**	-	-	
Duke	620	1996	1998	**225100520**	**225100523**	**225100010**	**225100013**	
LC4 Competition	620	1999	1999	**225100430**	-	**225101330**	**225101333**	
LC4 Competition SuperMoto	620	2000	2000	**225100430**	-	**225101330**	**225101333**	
LC4 RXC	620	1995	1995	**225100430**	-	**225101330**	**225101333**	
LC4 Supercompetition	620	2001	2001	**225100430**	-	**225101330**	**225101333**	
SC	620	1999	1999	**225100430**	-	**225101330**	**225101333**	
SX	620	1995	1999	**225100430**	-	**225101330**	**225101333**	
LC4 SC Supermoto	625	2002	2004	**225100430**	-	**225101330**	**225101333**	
SMC	625	2005	2005	**225101100**	**225101103**	**225101330**	**225101333**	
SXC	625	2003	2004	**225100430**	-	**225101330**	**225101333**	
Duke	640	1999	2002	**225100520**	**225100523**	**225100010**	**225100013**	
Duke	640	2003	2006	**225101100**	**225101103**	**225101330**	**225101333**	
LC4 Adventure	640	1999	2004	**225100430**	-	**225101330**	**225101333**	
LC4 Adventure	640	2005	2007	**225101010**	**225101013**	**225101330**	**225101333**	
LC4 Supermoto	640	2003	2003	**225100520**	**225100523**	**225101330**	**225101333**	
LC4 Supermoto	640	2004	2004	**225101100**	**225101103**	**225101330**	**225101333**	
LC4-E Enduro	640	1999	1999	**225100430**	-	**225101330**	**225101333**	
LC4-E Supermoto	640	1999	2002	**225100430**	-	**225101330**	**225101333**	
LC4 Rallye	660	2001	2003	**225100430**	-	**225101330**	**225101333**	
LC4 SM Factory Replica	660	2002	2002	**225100520**	**225100523**	**225101330**	**225101333**	
SMC Supermoto	660	2003	2003	**225100520**	**225100523**	**225101330**	**225101333**	
SMC Supermoto	660	2004	2007	**225101100**	**225101103**	**225101330**	**225101333**	
Duke	690	2008	2011	**225102860**	**225102863**	**225101330**	**225101333**	
Duke ABS	690	2012	2012	**225101100**	**225101103**	**225101330**	**225101333**	
Duke R	690	2010	2011	**225102860**	**225102863**	**225101330**	**225101333**	
Duke R	690	2014	2014	-	**225102923**	**225101330**	**225101333**	
Enduro	690	2008	2008	**225101010**	**225101013**	**225101330**	**225101333**	
Enduro R	690	2009	2009	**225101010**	**225101013**	**225101330**	**225101333**	
SM	690	2007	2007	**225102860**	**225102863**	**225101330**	**225101333**	
SMC	690	2008	2008	**225102860**	**225102863**	**225101330**	**225101333**	
Supermoto R	690	2008	2008	**225102860**	**225102863**	**225101330**	**225101333**	
LC8 Adventure	950	2002	2007	**225101010**	**225101013**	**225101330**	**225101333**	

Modello *Model*	**CC**	**Da** *From*	**A** *To*	RMS YOUR BEST PARTNER **Anteriore Organica** *Front Organic*	SINTER **Anteriore Sinterizzata** *Front Sintered*	RMS YOUR BEST PARTNER **Posteriore Organica** *Rear Organic*	SINTER **Posteriore Sinterizzata** *Rear Sintered*	**Note** *Notes*
R Superenduro	950	2006	2008	**225101010**	**225101013**	**225100430**	-	
SM	950	2005	2005	**225102860**	**225102863**	**225100430**	-	
SM R	950	2007	2007	**225102860**	**225102863**	**225100430**	-	
Adventure R	990	2010	2010	**225101010**	**225101013**	**225100430**	-	
Adventure, Adventure S, ABS	990	2006	2011	**225101010**	**225101013**	**225100430**	-	
Super Duke	990	2004	2013	**225102860**	**225102863**	**225101330**	**225101333**	
Super Duke R	990	2009	2013	**225102860**	**225102863**	**225101330**	**225101333**	
Supermoto	990	2007	2011	**225102860**	**225102863**	**225100430**	-	
Supermoto R	990	2010	2010	-	**225102923**	**225100430**	-	
Supermoto T	990	2009	2009	**225102860**	**225102863**	**225100430**	-	
Adventure	1050	2015	2015	**225101100**	**225101103**	**225100430**	-	
Super Adventure	1090	2017	2017	**225101100**	**225101103**	**225100430**	-	
Super Adventure R	1090	2017	2017	**225101100**	**225101103**	**225100430**	-	
Adventure	1190	2013	2013	**225101100**	**225101103**	**225100430**	-	
RC8	1190	2008	2008	-	**225102923**	**225100490**	**225100493**	
RC8 R	1190	2009	2009	-	**225102923**	**225100490**	**225100493**	
RC8 R Track	1190	2011	2011	-	**225102923**	**225100490**	**225100493**	
Super Adventure	1290	2015	2016	**225101100**	**225101103**	**225100430**	-	
Super Adventure R	1290	2017	2017	**225101100**	**225101103**	**225100430**	-	
Super Adventure S	1290	2017	2017	**225101100**	**225101103**	**225100430**	-	
Super Adventure T	1290	2017	2017	**225101100**	**225101103**	**225100430**	-	
Super Duke GT	1290	2016	2016	-	**225102923**	**225100490**	**225100493**	
Super Duke R	1290	2014	2014	-	**225102923**	**225100490**	**225100493**	
E-SM Freeride		2015	-	-	**225103543**	**225103530**	**225103533**	
E-SX Freeride		2015	-	-	**225103543**	**225103530**	**225103533**	
E-XC Freeride		2015	-	-	**225103543**	**225103530**	**225103533**	
Freeride Electric		2012	-	-	**225103543**	**225103530**	**225103533**	
KYMCO								
Agility	50	2005	2008	**225100580**	**225100583**	-	-	
Agility (4T) R10	50	2006	2006	**225100580**	**225100583**	-	-	
Agility (4T) R12	50	2006	2006	**225100580**	**225100583**	-	-	
Agility (4T) R16	50	2006	2006	**225102710**	-	-	-	
B&W	50	2004	2004	**225100350**	**225100353**	-	-	
Cobra Cross	50	1999	2000	**225102630**	**225102633**	-	-	
Cobra Cross	50	2001	2001	**225102630**	**225102633**	-	-	
Cobra Exclusive	50	2001	2001	**225102630**	**225102633**	-	-	
Cobra Racer	50	1999	2000	**225102630**	**225102633**	-	-	
Cobra Racer	50	2001	2001	**225102630**	**225102633**	-	-	
CX Curio Super	50	1994	1994	**225102630**	**225102633**	-	-	
DD Sniper	50	1994	1994	**225102630**	**225102633**	-	-	
Dink, Dink Sport, B&W	50	1999	1999	**225100350**	**225100353**	-	-	
Easy	50	2001	2001	**225102630**	**225102633**	-	-	
Filly LX	50	2001	2001	**225102630**	**225102633**	-	-	
Filly LX	50	2002	2002	**225100580**	**225100583**	-	-	
Heroism	50	1995	1996	**225102630**	**225102633**	-	-	
K12	50	1995	1995	**225102630**	**225102633**	-	-	
KB	50	1995	1995	**225102630**	**225102633**	-	-	
K-Pipe	50	2012	2012	**225100350**	**225100353**	-	-	
Manboy	50	1995	1995	**225103440**	-	-	-	
MXer	50	2003	2003	-	-	**225102710**	-	
MXU	50	2005	2005	-	-	**225102710**	-	
New Dink	50	2008	2008	**225100350**	**225100353**	-	-	
New Sento	50	2011	2011	**225100580**	**225100583**	-	-	
Nexxon	50	2008	2008	**225102590**	**225102593**	**225102590**	**225102593**	

Modello *Model*	**CC**	**Da** *From*	**A** *To*	RMS YOUR BEST PARTNER **Anteriore Organica** *Front Organic*	SINTER **Anteriore Sinterizzata** *Front Sintered*	RMS YOUR BEST PARTNER **Posteriore Organica** *Rear Organic*	SINTER **Posteriore Sinterizzata** *Rear Sintered*	**Note** *Notes*
People	50	1999	1999	**225102710**	-	-	-	
RS Agility Naked	50	2010	2010	**225100580**	**225100583**	-	-	
Scout	50	1995	1995	**225102630**	**225102633**	-	-	
Sento	50	2008	2010	**225100580**	**225100583**	-	-	
Spacer	50	1999	1999	**225100350**	**225100353**	-	-	
Super-8	50	2008	2008	**225102710**	-	-	-	
Super-9	50	2000	2001	**225102630**	**225102633**	-	-	
Super-9 A/C	50	2002	2002	**225100350**	**225100353**	-	-	
Super-9 L/C	50	2002	2002	**225100350**	**225100353**	**225102710**	-	
Topboy on/off road	50	1996	1996	**225102630**	**225102633**	-	-	
Topboy Racer/Cross	50	2001	2001	**225102630**	**225102633**	-	-	
Vitality	50	2004	2004	**225100580**	**225100583**	-	-	
Yager	50	2001	2001	**225100350**	**225100353**	-	-	
Yup	50	2001	2001	**225102630**	**225102633**	-	-	
Yup SP/AL	50	2002	2002	**225100580**	**225100583**	-	-	
Zap (Disc Brake version)	50	1995	1995	**225103440**	-	-	-	
ZX 12	50	2006	2006	**225102630**	**225102633**	-	-	
ZX Fever	50	1996	1996	**225102630**	**225102633**	**225120070**	-	
ZX Super Fever	50	2002	2002	**225102630**	**225102633**	-	-	
Manboy	90	1996	1996	**225102630**	**225102633**	-	-	
SP Yup	90	1995	1995	**225103440**	-	-	-	
Cobra Racer	100	1999	1999	**225100350**	**225100353**	-	-	
KB	100	1999	1999	**225102630**	**225102633**	-	-	
Spike	100	2002	2002	**225102590**	**225102593**	-	-	
Topboy on/off road	100	1999	1999	**225102630**	**225102633**	-	-	
Spike	110	2003	2003	**225102590**	**225102593**	-	-	
Agility	125	2006	2006	**225100580**	**225100583**	-	-	
Agility 16+	125	2014	2014	**225102710**	-	**225100350**	**225100353**	
Agility City	125	2011	2011	**225100580**	**225100583**	**225101200**	-	
Agility i R16 plus e4	125	2016	2016	**225102780**	-	**225100350**	-	
B&W, Dink Sport	125	1999	1999	**225100350**	**225100353**	**225100350**	**225100353**	
CK	125	2004	2013	**225102590**	**225102593**	-	-	
CK-1	125	2014	2014	**225100350**	**225100353**	-	-	
Cruiser	125	1999	1999	**225100350**	**225100353**	-	-	
Dink	125	1996	1996	**225100350**	**225100353**	**225100350**	**225100353**	
Downtown i	125	2010	2010	**225100870**	**225100873**	**225102760**	**225102763**	
G-Dink	125	2012	2012	**225100870**	**225100873**	**225102740**	**225102743**	
Grand Dink	125	2002	2002	**225100350**	**225100353**	**225100350**	**225100353**	
Heroism	125	1995	1997	**225100240***	-	-	-	* = Pastiglia non omologata | * = *Not homologated brake pad*
Hipster	125	2001	2001	**225100350**	**225100353**	-	-	
Jetix	125	2008	2008	**225102590**	**225102593**	-	-	
K-Pipe	125	2013	2013	**225100350**	**225100353**	-	-	
K-XCTi	125	2014	2014	**225102670**	**225102673**	**225102740**	**225102743**	
Like	125	2011	2011	**225100580**	**225100583**	-	-	
Movie	125	1999	1999	**225100350**	**225100353**	-	-	
Movie XL	125	2001	2001	**225100350**	**225100353**	-	-	
MXer	125	2003	2003	-	-	**225102710**	-	
New Dink	125	2008	2008	**225100350**	**225100353**	**225100350**	**225100353**	
New Downtown	125	2016	2016	**225102670**	**225102673**	**225102760**	**225102763**	
Nexxon	125	2008	2008	**225102590**	**225102593**	**225102590**	**225102593**	
People	125	2001	2001	**225102710**	-	-	-	
People GTi	125	2012	2012	**225102670**	**225102673**	**225102760**	**225102763**	
People One	125	2015	2018	**225102780**	-	**225100350**	-	

Modello *Model*	**CC**	**Da** *From*	**A** *To*	**Anteriore Organica** *Front Organic*	**Anteriore Sinterizzata** *Front Sintered*	**Posteriore Organica** *Rear Organic*	**Posteriore Sinterizzata** *Rear Sintered*	**Note** *Notes*
People One i	125	2014	2014	**225102710**	-	-	-	
People S	125	2005	2005	**225102710**	-	**225102740**	**225102743**	
Pulsar	125	2001	2001	**225100350**	**225100353**	-	-	
Quannon	125	2008	2008	**225100350**	**225100353**	**225100350**	**225100353**	
Spacer	125	1999	1999	**225100350**	**225100353**	**225100350**	**225100353**	
Spike	125	2002	2002	**225102590**	**225102593**	-	-	
Stryker on/off	125	1999	1999	**225100580**	**225100583**	-	-	
Super Dink	125	2010	2010	**225100870**	**225100873**	**225102760**	**225102763**	
Super-8	125	2008	2008	**225102710**	-	-	-	
Super-9	125	2000	2000	**225102630**	**225102633**	**225102710**	-	
Techno GT	125	2006	2006	**225100350**	**225100353**	-	-	
Vivio	125	2001	2001	**225100580**	**225100583**	-	-	
X-Town	125	2016	2016	**225102670**	**225102673**	**225102760**	**225102763**	
Yager	125	2001	2001	**225100350**	**225100353**	**225100350**	**225100353**	
Yager GT	125	2009	2009	**225100350**	**225100353**	-	-	
Zing	125	1996	1996	**225100350**	**225100353**	-	-	
B&W	150	2001	2001	**225100350**	**225100353**	**225100350**	**225100353**	
Dink	150	1999	1999	**225100350**	**225100353**	**225100350**	**225100353**	
DX Custom	150	1993	1993	**225102590**	**225102593**	-	-	
Freeway	150	1995	1995	**225102630**	**225102633**	-	-	
Grand Dink	150	2002	2002	**225100350**	**225100353**	**225100350**	**225100353**	
Heroism	150	1995	1997	**225100240***	-	**225100250***	-	* = Pastiglia non omologata | ** = Not homologated brake pad*
Hipster	150	2001	2001	**225100350**	**225100353**	-	-	
Movie XL	150	2001	2001	**225100350**	**225100353**	-	-	
MXer	150	2003	2003	-	-	**225102710**	-	
MXU	150	2005	2005	-	-	**225102710**	-	
NSR	150	1993	1993	**225102590**	**225102593**	-	-	
People	150	2001	2001	**225102710**	-	**225120401**	-	
Quannon	150	2010	2010	**225100350**	**225100353**	**225100350**	**225100353**	
Spacer	150	1999	1999	**225100350**	**225100353**	**225100350**	**225100353**	
Straight	150	2008	2008	**225102590**	**225102593**	**225102590**	**225102593**	
Stryker Off	150	2001	2001	**225100580**	**225100583**	-	-	
Vivio	150	2001	2001	**225100580**	**225100583**	**225120401**	-	
Yager	150	2001	2001	**225100350**	**225100353**	**225100350**	**225100353**	
Zing	150	1999	1999	**225100350**	**225100353**	-	-	
Agility 16+	200	2014	2014	**225102710**	-	**225100350**	**225100353**	
Agility Plus	200	2014	2014	**225102780**	-	**225100350**	-	
Agility R16	200	2011	2011	**225102710**	-	**225100350**	**225100353**	
Dink	200	2004	2004	**225100350**	**225100353**	**225100350**	**225100353**	
Downtown i	200	2010	2010	**225100870**	**225100873**	**225102760**	**225102763**	
i New Dink	200	2008	2008	**225100350**	**225100353**	**225100350**	**225100353**	
Like i	200	2010	2010	**225100350**	**225100353**	**225100350**	**225100353**	
People GTi	200	2012	2012	**225102670**	**225102673**	**225102760**	**225102763**	
S People	200	2005	2005	**225102710**	-	**225102740**	**225102743**	
Yager	200	2004	2004	**225100350**	**225100353**	**225100350**	**225100353**	
B&W, Dink Sport	250	2001	2001	**225100350**	**225100353**	**225100350**	**225100353**	
Grand Dink	250	2001	2001	**225100500**	-	**225100510**	-	
KXR	250	2004	2004	**225103070**	**225103073**	**225100500**	-	
MXU	250	2006	2006	**225103070**	**225103073**	**225100500**	-	
People LC	250	2003	2004	**225100350**	**225100353**	**225100690***	-	* = Pastiglia non omologata | ** = Not homologated brake pad*
S People	250	2006	2006	**225101070**	**225101073**	**225102740**	**225102743**	Pinza destra | *Right Caliper*
S People	250	2006	2006	**225101420**	**225101423**	**225102740**	**225102743**	Pinza sinistra | *Left Caliper*

Modello *Model*	**CC**	**Da** *From*	**A** *To*	RMS YOUR BEST PARTNER **Anteriore Organica** *Front Organic*	SINTER **Anteriore Sinterizzata** *Front Sintered*	RMS YOUR BEST PARTNER **Posteriore Organica** *Rear Organic*	SINTER **Posteriore Sinterizzata** *Rear Sintered*	**Note** *Notes*
Super-9	250	2000	2000	**225102630**	**225102633**	**225102710**	-	
Urban Quad	250	2006	2006	**225103070**	**225103073**	**225100500**	-	
Venox	250	2001	2001	**225100870**	**225100873**	**225100870**	**225100873**	
Xciting	250	2004	2005	**225100870**	**225100873**	-	-	
Xciting	250	2004	2005	**225100890***	-	-	-	* = Pastiglia non omologata | * = *Not homologated brake pad*
Xciting	250	2006	2006	**225100870**	**225100873**	**225102740**	**225102743**	
Xciting	250	2006	2006	**225100890***	-	**225102740**	**225102743**	* = Pastiglia non omologata | * = *Not homologated brake pad*
Yup	250	2003	2003	**225100350**	**225100353**	**225100350**	**225100353**	
Downtown i	300	2010	2010	**225100870**	**225100873**	**225102760**	**225102763**	
G-Dink	300	2012	2012	**225100870**	**225100873**	**225102740**	**225102743**	
K-XCTi	300	2012	2012	**225102670**	**225102673**	**225102740**	**225102743**	
Maxxer	300	2006	2006	**225103070**	**225103073**	**225100500**	-	
Maxxer Supermoto	300	2015	2015	**225103070**	**225103073**	**225100500**	-	
MXU	300	2006	2006	**225103070**	**225103073**	**225103070**	**225103073**	
People Gti	300	2010	2010	**225102670**	**225102673**	**225102760**	**225102763**	
People GTi	300	2012	2012	**225102670**	**225102673**	**225102760**	**225102763**	
People Si	300	2008	2008	**225100350**	**225100353**	**225102740**	**225102743**	Pinza destra | *Right Caliper*
People Si	300	2008	2008	**225100580**	**225100583**	**225102740**	**225102743**	Pinza sinistra | *Left Caliper*
Xciting Ri	300	2008	2008	**225100870**	**225100873**	**225102740**	**225102743**	
Xciting Ri	300	2008	2008	**225100890***	-	**225102740**	**225102743**	* = Pastiglia non omologata | * = *Not homologated brake pad*
X-Town	300	2016	2016	**225102670**	**225102673**	**225102760**	**225102763**	
New Downtown	350	2016	2016	**225102670**	**225102673**	**225102760**	**225102763**	
Xciting i	400	2012	2012	**225102830**	**225102833**	**225103140**	**225103143**	
MXU	500	2006	2008	**225103070**	**225103073**	**225103070**	**225103073**	
UXV 4x4	500	2008	2008	**225103070**	**225103073**	**225103070**	**225103073**	
Xciting	500	2004	2004	**225100870**	**225100873**	**225103140**	**225103143**	
Xciting	500	2004	2004	**225100890***	-	**225102530***	-	* = Pastiglia non omologata | * = *Not homologated brake pad*
Xciting i Evo ABS	500	2011	2011	**225100870**	**225100873**	**225103140**	**225103143**	
Xciting i Evo ABS	500	2011	2011	**225100890***	-	**225102530***	-	* = Pastiglia non omologata | * = *Not homologated brake pad*
Xciting R ABS	500	2009	2009	**225100870**	**225100873**	**225103140**	**225103143**	
Xciting R ABS	500	2009	2009	**225100890***	-	**225102530***	-	* = Pastiglia non omologata | * = *Not homologated brake pad*
AK	550	2017	2017	-	**225103193**	**225103570**	**225103573**	
MyRoad, ABS	700	2009	2009	**225100870**	**225100873**	**225103140**	**225103143**	
LAVERDA								
Gaucho	50	1992	1992	**225100010**	**225100013**	**225100010**	**225100013**	
OR Atlas	50	1986	1986	**225100010**	**225100013**	**225100010**	**225100013**	
OR Atlas	50	1990	1990	**225100010**	**225100013**	**225100010**	**225100013**	
CU Ride	125	1986	1986	**225100010**	**225100013**	-	-	
Custom	125	1986	1986	**225100010**	**225100013**	-	-	
LB Uno	125	1985	1985	**225100010**	**225100013**	-	-	
Phoenix	125	2001	2001	**225103260**	-	**225102710**	-	
Phoenix	150	2001	2001	**225103260**	-	**225102710**	-	
Phoenix	200	2001	2001	**225103260**	-	**225102710**	-	
GS Lesmo	350	1986	1986	**225100010**	**225100013**	**225100010**	**225100013**	
PF Alpino	350	-	-	**225100010**	**225100013**	**225100010**	**225100013**	
RS Alpino	350	-	-	**225100010**	**225100013**	**225100010**	**225100013**	
Alpino, S	500	1977	1977	**225100010**	**225100013**	**225100010**	**225100013**	
SFC	500	-	-	**225103150**	**225103153**	**225103150**	**225103153**	
OR Atlas	600	1986	1986	-	-	**225100010**	**225100013**	

Modello *Model*	**CC**	**Da** *From*	**A** *To*	**Anteriore Organica** *Front Organic*	**Anteriore Sinterizzata** *Front Sintered*	**Posteriore Organica** *Rear Organic*	**Posteriore Sinterizzata** *Rear Sintered*	**Note** *Notes*
SFC	600	1986	1986	**225103150**	**225103153**	**225103150**	**225103153**	
650	650	1992	1992	**225100520**	**225100523**	**225100010**	**225100013**	
V-Six	650	1993	1993	**225103150**	**225103153**	**225103150**	**225103153**	
668	668	1996	1996	**225100520**	**225100523**	**225100010**	**225100013**	
Ghost, Diamante	668	1997	1997	**225100520**	**225100523**	**225100010**	**225100013**	
El Cid	700	1990	1990	**225101200**	-	**225101200**	-	
Cup	750	1998	1998	**225100520**	**225100523**	**225100010**	**225100013**	
Diamante	750	1997	1997	**225100520**	**225100523**	**225100010**	**225100013**	
Ghost Strike	750	1997	1997	**225100520**	**225100523**	**225100010**	**225100013**	
S Formula	750	1997	2001	**225100520**	**225100523**	**225100010**	**225100013**	
S, S Carenata	750	1997	1997	**225100520**	**225100523**	**225100010**	**225100013**	
SF2	750	1974	1978	**225103150**	**225103153**	-	-	
SF3	750	1974	1978	**225103150**	**225103153**	-	-	
SF3 RGS Corsa, Executive	750	1977	1977	**225103150**	**225103153**	**225103150**	**225103153**	
Sport	750	1999	1999	**225100520**	**225100523**	**225100010**	**225100013**	
Strike/Black Strike	750	1999	1999	**225100520**	**225100523**	**225100010**	**225100013**	
T8	750	1998	1998	**225100520**	**225100523**	**225100010**	**225100013**	
TTS	800	1999	1999	**225100520**	**225100523**	**225100490**	**225100493**	
3C 3CE, 3CL	1000	1974	1974	**225103150**	**225103153**	**225103150**	**225103153**	
Jota	1000	1976	1976	**225103150**	**225103153**	**225103150**	**225103153**	
JOTA	1000	1995	1995	**225100520**	**225100523**	**225100010**	**225100013**	
RGS	1000	1983	1983	**225103150**	**225103153**	**225103150**	**225103153**	
RGS Jota	1000	1986	1986	**225103150**	**225103153**	**225103150**	**225103153**	
SFC	1000	1985	1986	**225103150**	**225103153**	**225103150**	**225103153**	
SFC	1000	2004	2004	**225102860**	**225102863**	**225100490**	**225100493**	Pinza radiale | *Radial Caliper*
TGA Executive	1000	1984	1984	**225103150**	**225103153**	**225103150**	**225103153**	
Mirage	1200	1978	1978	**225103150**	**225103153**	**225103150**	**225103153**	
LEM								
CX2, CX3, RX2, RX3	50	2003	2003	**225103220**	**225103223**	**225103220**	**225103223**	
Flash	50	1994	1994	**225100180**	-	**225120061**	-	
Ghibli	50	1990	1990	**225120061**	-	**225120061**	-	
R2, R3, R3 XC	50	2003	2003	**225103220**	**225103223**	**225103220**	**225103223**	
RX	65	2005	2005	**225103220**	**225103223**	**225103220**	**225103223**	
RX	150	2011	2011	-	-	**225103220**	**225103223**	
MALAGUTI								
Centro	50	1993	1993	**225100070**	-	**225120090**	-	
Centro	50	1993	1993	**225100070**	-	**225120091**	-	
CH	50	1986	1986	**225100030**	-	-	-	
CHOPPER 25 - 40 - 80 - FIFTY	50	1982	-	-	-	**225120190**	-	
Ciak	50	2000	2000	**225100190**	**225100193**	**225120090**	-	
Ciak	50	2000	2000	**225100190**	**225100193**	**225120091**	-	
Ciak Twin Disk	50	2002	2002	**225100190**	**225100193**	**225100190**	**225100193**	
ciclomotori 50 all models	50	1983	-	-	-	**225120190**	-	
CR-1 Crosser	50	1995	1995	**225100030**	-	-	-	
EL Crosser	50	1997	1997	**225100190**	**225100193**	-	-	
Enduro	50	1985	1985	**225100010**	**225100013**	-	-	
Enduro Dune	50	1987	1988	**225100030**	-	**225100030**	-	
F-10	50	1992	1993	**225101200**	-	**225120090**	-	
F-10	50	1992	1993	**225101200**	-	**225120091**	-	
F-10 Jet-Line	50	1994	1994	**225100190**	**225100193**	-	-	
F-10 Timemachine	50	2003	2003	**225100190**	**225100193**	**225120090**	-	
F-10 Timemachine	50	2003	2003	**225100190**	**225100193**	**225120091**	-	
F-10 WAP	50	2002	2002	**225100190**	**225100193**	**225120090**	-	
F-10 WAP	50	2002	2002	**225100190**	**225100193**	**225120091**	-	

Modello *Model*	**CC**	**Da** *From*	**A** *To*	RMS YOUR BEST PARTNER **Anteriore Organica** *Front Organic*	SINTER **Anteriore Sinterizzata** *Front Sintered*	RMS YOUR BEST PARTNER **Posteriore Organica** *Rear Organic*	SINTER **Posteriore Sinterizzata** *Rear Sintered*	**Note** *Notes*
F-12 Phantom	50	1994	1998	**225100030**	-	**225120090**	-	
F-12 Phantom	50	1994	1998	**225100030**	-	**225120091**	-	
F-12 Phantom A.C.	50	1999	1999	**225100190**	**225100193**	-	-	
F-12 Phantom Digit	50	2002	2002	**225100190**	**225100193**	**225100190**	**225100193**	
F-12 Phantom L.C.	50	1994	1998	**225100070**	-	**225120090**	-	
F-12 Phantom L.C.	50	1994	1998	**225100070**	-	**225120091**	-	
F-12 Phantom L.C. dd	50	1999	1999	**225100190**	**225100193**	**225100190**	**225100193**	
F-12 Racing Life	50	2003	2003	**225100190**	**225100193**	**225100190**	**225100193**	
F-12 Tyre Track	50	2003	2003	**225100190**	**225100193**	**225100190**	**225100193**	
F-15 Fire Fox	50	1996	1996	**225100030**	-	**225120090**	-	
F-15 Fire Fox	50	1996	1996	**225100030**	-	**225120091**	-	
F-15 Fire Fox L.C.	50	1996	1996	**225100070**	-	-	-	
F-15 Mechatronic	50	2003	2003	**225100190**	**225100193**	**225100190**	**225100193**	
Fifty	50	2004	2004	**225100360**	**225100363**	**225100080**	**225100083**	
Fifty Full, CX, Top	50	1985	1985	**225100030**	-	-	-	
Fifty Mistral	50	1990	1990	**225100030**	-	-	-	
LX 50 SPORT	50	1982	-	**225120190**	-	-	-	
MDX Gold Enduro	50	1987	1987	**225100070**	-	-	-	
MLX Enduro	50	1987	1987	**225100070**	-	-	-	
MRX	50	1989	1989	**225100010**	**225100013**	-	-	
NKD	50	2004	2004	**225100360**	**225100363**	**225100080**	**225100083**	
NKD Dragon	50	2006	2006	**225103160**	**225103163**	**225100080**	**225100083**	
RCW 50 RONCO	50	1982	-	-	-	**225120190**	-	
RST	50	1990	1990	**225100010**	**225100013**	**225100010**	**225100013**	
RST Sport	50	1987	1987	**225100030**	-	**225100030**	-	
SL Centro	50	1996	1996	**225100190**	**225100193**	**225120090**	-	
SL Centro	50	1996	1996	**225100190**	**225100193**	**225120091**	-	
VA 50 OLYMPIQUE	50	1982	-	-	-	**225120190**	-	
XSM	50	2003	2003	**225100360**	**225100363**	**225100080**	**225100083**	
XTM	50	2003	2003	**225100080**	**225100083**	**225100080**	**225100083**	
Yesterday	50	1997	1997	**225100190**	**225100193**	**225120090**	-	
Yesterday	50	1997	1997	**225100190**	**225100193**	**225120091**	-	
CHOPPER 80	80	1982	-	-	-	**225120190**	-	
Ciak	100	2000	2000	**225100190**	**225100193**	**225100190**	**225100193**	
F-12 Phantom A.C.	100	2000	2000	**225100190**	**225100193**	-	-	
F-12 Phantom Twin Disk	100	2002	2002	**225100190**	**225100193**	**225100190**	**225100193**	
Blog	125	2010	2010	**225100580**	**225100583**	**225102800**	-	
Centro ie	125	2008	2011	**225100580**	**225100583**	**225102730**	-	
Ciak, Ciak Master	125	2002	2002	**225100190**	**225100193**	-	-	
F-18 , Warrior	125	2000	2000	**225100190**	**225100193**	**225100310**	**225100313**	
Madison 3	125	2008	2008	**225101010**	**225101013**	**225100490**	**225100493**	
Phantom Max	125	2004	2004	**225100360**	**225100363**	**225100310**	**225100313**	
R Madison	125	1999	1999	**225100360**	**225100363**	**225100310**	**225100313**	
Runner	125	1987	1987	**225100060**	**225100063**	-	-	
Sport City Cube	125	2008	2008	**225100060**	**225100063**	**225100310**	**225100313**	
Ciak, Ciak Master	150	2002	2002	**225100190**	**225100193**	-	-	
F-18	150	2000	2000	**225100190**	**225100193**	**225100190**	**225100193**	
Madison	150	1999	1999	**225100360**	**225100363**	**225100310**	**225100313**	
Blog	160	2010	2010	**225100580**	**225100583**	**225102800**	-	
Centro ie	160	2008	2011	**225100580**	**225100583**	**225102730**	-	
Madison	180	2002	2002	**225100360**	**225100363**	**225100310**	**225100313**	
Phantom Max	200	2004	2004	**225100360**	**225100363**	**225100310**	**225100313**	
S Madison	200	2003	2003	**225100360**	**225100363**	**225100310**	**225100313**	
Sport City Cube	200	2008	2008	**225100060**	**225100063**	**225100310**	**225100313**	

Modello *Model*	**CC**	**Da** *From*	**A** *To*	RMS YOUR BEST PARTNER **Anteriore Organica** *Front Organic*	SINTER **Anteriore Sinterizzata** *Front Sintered*	RMS YOUR BEST PARTNER **Posteriore Organica** *Rear Organic*	SINTER **Posteriore Sinterizzata** *Rear Sintered*	**Note** *Notes*
Madison	250	1999	1999	**225102670**	**225102673**	**225100310**	**225100313**	
Madison 3 ie	250	2008	2008	**225101010**	**225101013**	**225100490**	**225100493**	
Password	250	2006	2006	**225100360**	**225100363**	**225100310**	**225100313**	
Phantom Max	250	2005	2005	**225100360**	**225100363**	**225100310**	**225100313**	
RS Madison	250	2005	2005	**225100360**	**225100363**	**225100310**	**225100313**	
Sport City Cube	250	2008	2008	**225100060**	**225100063**	**225100310**	**225100313**	
Sport City Cube	300	2008	2008	**225100060**	**225100063**	**225100310**	**225100313**	
K Madison	400	2002	2002	**225102670**	**225102673**	**225100310**	**225100313**	
MGX Ronco	450	1987	1987	**225100030**	-	-	-	
GT Spidermax	500	2004	2004	**225100060**	**225100063**	**225100490**	**225100493**	
RS Spidermax	500	2009	2009	**225100060**	**225100063**	**225100490**	**225100493**	
MASH								
Cafe Racer	125	2014	2014	**225102590**	**225102593**	**225101440**	-	
Seventy Five	125	2014	2014	**225102590**	**225102593**	**225101440**	-	
Cafe Racer	250	2014	2014	**225102590**	**225102593**	**225101440**	-	
Two Fifty	250	2014	2014	**225102590**	**225102593**	**225101440**	-	
Scrambler	400	2013	2013	**225100870**	**225100873**	-	-	
Five Hundred	500	2013	2013	**225100870**	**225100873**	-	-	
MBK								
Booster	50	1994	1994	**225120051**	-	**225120051**	-	
Booster 12"	50	2003	2003	**225100190**	**225100193**	-	-	
Booster Naked	50	2004	2004	**225100190**	**225100193**	-	-	
Booster Next Gen.	50	1997	1997	**225103210**	-	**225120051**	-	
Booster Rocket	50	1995	2002	**225103210**	-	**225120051**	-	
Booster Spirit	50	2000	2000	**225100190**	**225100193**	**225120051**	-	
Booster Track	50	1997	2002	**225103210**	-	**225120051**	-	
Equalis	50	1996	1996	**225103210**	-	**225120061**	-	
Evolis	50	1992	1992	**225103210**	-	**225120051**	-	
Fizz	50	1993	1993	**225103210**	-	**225120061**	-	
Flipper	50	1999	1999	**225100190**	**225100193**	**225120051**	-	
Forte	50	1994	1994	**225103210**	-	**225120061**	-	
Hot Champ	50	1991	1991	-	-	**225120051**	-	
Mach G	50	2002	2002	**225100190**	**225100193**	-	-	
Nitro	50	1997	2010	**225103210**	-	**225100280**	-	
Ovetto	50	1997	2010	**225103210**	-	**225120051**	-	
Sorriso	50	1992	1992	**225120061**	-	**225120061**	-	
Stunt	50	2000	2010	**225100280**	-	-	-	
Target	50	1992	1992	**225100180**	-	**225120061**	-	
X-Limit	50	2004	2004	**225100080**	**225100083**	**225100080**	**225100083**	
X-Power	50	2004	2004	**225100360**	**225100363**	**225100080**	**225100083**	
Active	75	1990	1990	**225120051**	-	-	-	
Evolis	80	1994	1994	**225103210**	-	**225120061**	-	
Booster	100	1999	2002	**225100180**	-	-	-	
Nitro	100	2000	2003	**225100190**	**225100193**	-	-	
YN Ovetto	100	2000	2002	**225100190**	**225100193**	**225120451**	-	
Doodo	125	2001	2001	**225100190**	**225100193**	**225120451**	-	
Flame R/F	125	1995	2003	**225102730**	-	**225120061**	-	
Skycruiser	125	2006	2006	**225100770**	**225100773**	**225100490**	**225100493**	
XC Waap	125	2008	2008	**225103290**	**225103293**	-	-	
XQ Thunder	125	2001	2001	**225100430**	-	**225100490**	**225100493**	
YP Flame X	125	2005	2005	**225102720**	-	-	-	
YP Skyliner	125	1999	2000	**225100430**	-	**225120451**	-	
YP Skyliner	125	2001	2001	**225100430**	-	**225100490**	**225100493**	
YW Z	125	2010	2010	**225103250**	**225103253**	-	-	

Modello *Model*	**CC**	**Da** *From*	**A** *To*	RMS YOUR BEST PARTNER **Anteriore Organica** *Front Organic*	SINTER **Anteriore Sinterizzata** *Front Sintered*	RMS YOUR BEST PARTNER **Posteriore Organica** *Rear Organic*	SINTER **Posteriore Sinterizzata** *Rear Sintered*	**Note** *Notes*
Doodo	150	2001	2001	**225100190**	**225100193**	-	-	
Skyliner	150	2001	2001	**225100430**	-	**225100490**	**225100493**	
Vertex	150	1997	1997	**225102730**	-	**225120451**	-	
XQ Thunder	150	2002	2002	**225100430**	-	**225100490**	**225100493**	
Skyliner	180	2004	2004	**225100430**	-	**225100490**	**225100493**	
Skyliner	250	2000	2000	**225100410**	**225100413**	**225102660**	**225102663**	
Kilibre	300	2003	2003	**225100430**	-	**225100430**	-	
Skyliner	400	2004	2004	**225100410**	**225100413**	-	-	
MINARELLI								
MR	80	-	-	**225100080**	**225100083**	-	-	
MINICAR								
MICROCAR 500	500	-	-	**225100540**	-	-	-	
GRECAV 505 EIKE	505	-	-	**225100540**	-	-	-	
MONTESA								
Cota	125	1988	1988	**225100080**	**225100083**	**225100080**	**225100083**	
Cota 4RT	250	2005	2013	**225100640**	-	**225100650**	-	
Cota 4Ride	260	2016	2016	-	-	**225100650**	-	
Cota 4RT	260	2014	2014	**225100640**	-	**225100650**	-	
Cota 4RT Race Replica	260	2015	2015	-	-	**225100650**	-	
Evasion	260	1992	1992	**225100080**	**225100083**	**225100010**	**225100013**	
Cota RR	300	2016	2016	-	-	**225100650**	-	
Cota	304	1988	1988	**225100080**	**225100083**	**225100080**	**225100083**	
Cota	307	1989	1989	**225100080**	**225100083**	**225100080**	**225100083**	
Cota Trial	307	1988	1988	**225100080**	**225100083**	**225100080**	**225100083**	
Cota	309	1989	1989	**225100080**	**225100083**	**225100010**	**225100013**	
Cota	310	1989	1989	**225100080**	**225100083**	**225100010**	**225100013**	
Cota Trial	311	1992	1992	**225100080**	**225100083**	**225100010**	**225100013**	
Cota R	315	1997	1997	**225100080**	**225100083**	**225100080**	**225100083**	
Cota	335	1987	1991	**225100080**	**225100083**	**225100080**	**225100083**	
315R	360	2001	2004	**225100640**	-	**225100650**	-	
H7 Enduro	360	1986	1986	**225100030**	-	-	-	
M7 Enduro	360	1985	1985	**225100080**	**225100083**	-	-	
MORBIDELLI								
cc	125	-	-	**225100080**	**225100083**	**225100080**	**225100083**	
MOTO GUZZI								
CHIU' 50	50	1974	1976	**225120190**	-	**225120190**	-	
DINGO 50 3 V	50	1975	1976	**225120190**	-	**225120190**	-	
DINGO 50 3M	50	1966	1974	**225120190**	-	**225120190**	-	
DINGO 50 M	50	1969	1973	**225120190**	-	**225120190**	-	
DINGO 50 MM	50	1975	1976	**225120190**	-	**225120190**	-	
MAGNUM 50	50	1975	1976	**225120190**	-	**225120190**	-	
TROTTER 50	50	1966	1970	**225120190**	-	**225120190**	-	
TROTTER 50 MARK M - V	50	1971	1973	**225120190**	-	**225120190**	-	
TROTTER 50 SPECIAL M - V	50	1971	1973	**225120190**	-	**225120190**	-	
TROTTER 50 SUPER	50	1966	1970	**225120190**	-	**225120190**	-	
BX	125	1992	1992	**225100010**	**225100013**	**225100010**	**225100013**	
Custom	125	1985	1985	**225100010**	**225100013**	-	-	
Enduro TT	125	1985	1985	**225100010**	**225100013**	-	-	
/4	240	1977	1977	**225100010**	**225100013**	-	-	
TS	250	1975	1976	**225100010**	**225100013**	-	-	
350	350	1977	1977	**225100010**	**225100013**	**225100010**	**225100013**	
Falco	350	1988	1988	**225100010**	**225100013**	**225100010**	**225100013**	
Imola	350	1978	1978	**225100010**	**225100013**	**225100010**	**225100013**	
Nevada	350	1992	1992	**225100010**	**225100013**	-	-	

Modello *Model*	**CC**	**Da** *From*	**A** *To*	RMS YOUR BEST PARTNER **Anteriore Organica** *Front Organic*	SINTER **Anteriore Sinterizzata** *Front Sintered*	RMS YOUR BEST PARTNER **Posteriore Organica** *Rear Organic*	SINTER **Posteriore Sinterizzata** *Rear Sintered*	**Note** *Notes*
NTX	350	1988	1988	**225100010**	**225100013**	**225100010**	**225100013**	
NTX	350	1990	1990	**225100010**	**225100013**	**225103150**	**225103153**	
V35 C	350	-	-	**225103150**	**225103153**	**225100010**	**225100013**	
V35 Florida	350	-	-	**225103150**	**225103153**	**225100010**	**225100013**	
V35 GT	350	1990	1990	**225103150**	**225103153**	**225100010**	**225100013**	
V35 GT	350	-	-	**225100010**	**225100013**	-	-	
V35 II, Imola, Imola II	350	1977	1977	**225100010**	**225100013**	**225100010**	**225100013**	
V35 III	350	1987	1987	**225103150**	**225103153**	**225103150**	**225103153**	
V35 TT	350	1986	1986	**225103150**	**225103153**	**225103150**	**225103153**	
400	400	1979	1979	**225100010**	**225100013**	**225100010**	**225100013**	
500	500	1977	1977	**225100010**	**225100013**	**225100010**	**225100013**	
Monza	500	1978	1978	**225100010**	**225100013**	**225100010**	**225100013**	
V50 1,2,3, Monza Chopper	500	1977	1977	**225100010**	**225100013**	**225100010**	**225100013**	
650	650	1980	1980	**225100010**	**225100013**	**225100010**	**225100013**	
Florida	650	-	-	**225100010**	**225100013**	**225100010**	**225100013**	
GT Sessantacinque	650	1989	1989	**225100010**	**225100013**	**225100010**	**225100013**	
NTX	650	1990	1990	**225100010**	**225100013**	**225103150**	**225103153**	
V65 Florida	650	1986	1986	**225103150**	**225103153**	**225103150**	**225103153**	
V65 GT	650	1990	1990	**225103150**	**225103153**	-	-	
V65 Lario	650	1986	1986	**225100010**	**225100013**	**225100010**	**225100013**	
V65 NTX	650	1987	1987	**225100010**	**225100013**	**225100010**	**225100013**	
V65 SP, Chopper	650	-	-	**225100010**	**225100013**	**225100010**	**225100013**	
V65 TT	650	1986	1986	**225100010**	**225100013**	**225100010**	**225100013**	
Breva	750	2003	2003	**225101100**	**225101103**	**225100490**	**225100493**	
Nevada	750	1992	1996	**225100010**	**225100013**	-	-	
Nevada Classic ie	750	2006	2006	**225101100**	**225101103**	**225100490**	**225100493**	
Nevada, Club/Base	750	1997	2002	**225100010**	**225100013**	**225100010**	**225100013**	
Nevada, Nevada Club	750	2003	2003	**225101100**	**225101103**	**225100490**	**225100493**	
NTX	750	1989	1989	**225100010**	**225100013**	**225100010**	**225100013**	
NTX	750	1990	1990	-	-	**225103150**	**225103153**	
S3	750	1975	1976	**225103150**	**225103153**	-	-	Pinza sinistra | *Left Caliper*
S3	750	1975	1976	**225103150**	**225103153**	-	-	Pinza destra | *Right Caliper*
SP	750	1991	1991	**225103150**	**225103153**	**225103150**	**225103153**	
Targa	750	1989	1989	**225100010**	**225100013**	**225100010**	**225100013**	
V7 Cafe Classic	750	2010	2010	**225101100**	**225101103**	**225100490**	**225100493**	
V7 Classic	750	2009	2012	**225101100**	**225101103**	**225100490**	**225100493**	
V7 Clubman Racer	750	2010	2010	**225101100**	**225101103**	**225100490**	**225100493**	
V7 II Racer	750	2015	2015	**225101100**	**225101103**	**225100060**	**225100063**	
V7 II Scrambler	750	2016	2016	**225101100**	**225101103**	**225100060**	**225100063**	
V7 II Special	750	2015	2015	**225101100**	**225101103**	**225100060**	**225100063**	
V7 II Stone	750	2015	2015	**225101100**	**225101103**	**225100060**	**225100063**	
V7 II Stornello	750	2016	2016	**225101100**	**225101103**	**225100060**	**225100063**	
V7 II Stornello Ltd. Edition	750	2017	2017	**225101100**	**225101103**	**225100060**	**225100063**	
V7 III Anniversario	750	2017	2017	**225101100**	**225101103**	**225100060**	**225100063**	
V7 III Racer	750	2017	2017	**225101100**	**225101103**	**225100060**	**225100063**	
V7 III Special	750	2017	2017	**225101100**	**225101103**	**225100060**	**225100063**	
V7 III Stone	750	2017	2017	**225101100**	**225101103**	**225100060**	**225100063**	
V7 Racer	750	2011	2011	**225101100**	**225101103**	**225100490**	**225100493**	
V7 Racer	750	2012	2014	**225101100**	**225101103**	**225100060**	**225100063**	
V7 Stone	750	2012	2014	**225101100**	**225101103**	**225100060**	**225100063**	
V75	750	1986	1986	**225103150**	**225103153**	**225103150**	**225103153**	
V75 Duna	750	1986	1986	**225103150**	**225103153**	**225103150**	**225103153**	
V75 TT Paris-Dakar	750	1986	1986	**225103150**	**225103153**	**225103150**	**225103153**	
Le Mans	850	1976	1976	**225103150**	**225103153**	**225103150**	**225103153**	

Modello *Model*	**CC**	**Da** *From*	**A** *To*	**Anteriore Organica** *Front Organic*	**Anteriore Sinterizzata** *Front Sintered*	**Posteriore Organica** *Rear Organic*	**Posteriore Sinterizzata** *Rear Sintered*	**Note** *Notes*
T	850	1974	1976	**225103150**	**225103153**	-	-	
T3	850	1975	1975	**225103150**	**225103153**	**225103150**	**225103153**	
T4	850	1975	1975	**225103150**	**225103153**	**225103150**	**225103153**	
T5	850	1975	1975	**225103150**	**225103153**	**225103150**	**225103153**	
T5 N.T.	850	1986	1986	**225103150**	**225103153**	**225103150**	**225103153**	
V9 Bobber	850	2016	2016	**225101100**	**225101103**	**225100060**	**225100063**	
V9 Roamer	850	2016	2016	**225101100**	**225101103**	**225100060**	**225100063**	
V9 X-Track	850	2017	2017	**225101100**	**225101103**	**225100060**	**225100063**	
Custom	940	2007	2007	**225101100**	**225101103**	**225101010**	**225101013**	
California II	1000	1985	1988	**225103150**	**225103153**	**225103150**	**225103153**	
California III C	1000	1991	1995	**225103150**	**225103153**	**225103150**	**225103153**	
California III, Fuel Injection	1000	1989	1989	**225103150**	**225103153**	**225103150**	**225103153**	
Daytona	1000	1991	1991	**225100520**	**225100523**	**225103150**	**225103153**	
GT V	1000	1991	1991	**225103150**	**225103153**	**225103150**	**225103153**	
Le Mans IV	1000	1985	1985	**225103150**	**225103153**	**225103150**	**225103153**	
Le Mans, V	1000	1990	1990	**225103150**	**225103153**	**225103150**	**225103153**	
Quota	1000	1992	1992	**225100520**	**225100523**	**225102610**	**225102613**	
RS Daytona	1000	1997	2000	**225100520**	**225100523**	**225100010**	**225100013**	
S	1000	1990	1990	**225103150**	**225103153**	**225103150**	**225103153**	
SP III	1000	1991	1991	**225103150**	**225103153**	**225103150**	**225103153**	
SP Le Mans	1000	1979	1979	**225103150**	**225103153**	-	-	Pinza sinistra | *Left Caliper*
SP Le Mans	1000	1979	1979	**225103150**	**225103153**	-	-	Pinza destra | *Right Caliper*
V Strada	1000	1993	1993	**225103150**	**225103153**	**225100010**	**225100013**	
V10 Centauro	1000	1996	2000	**225100520**	**225100523**	**225100010**	**225100013**	
California	1100	1996	1996	**225103150**	**225103153**	**225103150**	**225103153**	
California EV	1100	2006	2006	**225101100**	**225101103**	**225101010**	**225101013**	
California EV Touring	1100	2006	2006	**225101100**	**225101103**	**225101010**	**225101013**	
California Jackal	1100	2000	2000	**225100520**	**225100523**	**225101010**	**225101013**	
California Jackal	1100	2001	2001	**225101100**	**225101103**	**225101010**	**225101013**	
California Jackal Basic	1100	2000	2000	**225100520**	**225100523**	**225101010**	**225101013**	
California Jackal Basic	1100	2001	2001	**225101100**	**225101103**	**225101010**	**225101013**	
California Special	1100	1999	2000	**225100520**	**225100523**	**225101010**	**225101013**	
California Special	1100	2001	2001	**225101100**	**225101103**	**225101010**	**225101013**	
California Special Sport Alloy	1100	2002	2002	**225101100**	**225101103**	**225101010**	**225101013**	
California Stone Metal	1100	2002	2002	**225101100**	**225101103**	**225101010**	**225101013**	
California Stone, Stone Touring	1100	2002	2002	**225101100**	**225101103**	**225101010**	**225101013**	
California Titanium	1100	2003	2003	**225101100**	**225101103**	**225101010**	**225101013**	
California Vintage	1100	2006	2006	**225101100**	**225101103**	**225101010**	**225101013**	
ES Quota	1100	1999	1999	**225101010**	**225101013**	**225100430**	-	
EV California	1100	1997	2000	**225100520**	**225100523**	**225100010**	**225100013**	
EV California, 80, Touring	1100	2001	2001	**225101100**	**225101103**	**225100010**	**225100013**	
Griso	1100	2005	2005	**225101100**	**225101103**	**225101010**	**225101013**	
Sport	1100	1996	1996	**225100520**	**225100523**	**225100010**	**225100013**	
V Breva	1100	2004	2004	**225101100**	**225101103**	**225100490**	**225100493**	
V Breva, ABS	1100	2005	2007	**225101100**	**225101103**	**225100430**	-	
V11 , Scura, Sport Scura	1100	2002	2002	**225101100**	**225101103**	**225100010**	**225100013**	
V11 Lemans, Lemans Tenni, Lemans Rosso Corsa	1100	2001	2001	**225101100**	**225101103**	**225100010**	**225100013**	
V11 Sport	1100	1997	2000	**225100520**	**225100523**	**225100010**	**225100013**	
V11 Sport Rosso Mandell	1100	2001	2001	**225101100**	**225101103**	**225100010**	**225100013**	
V11 Sport, Sport Naked	1100	2001	2001	**225101100**	**225101103**	**225100010**	**225100013**	
Griso 8V	1200	2007	2007	**225101100**	**225101103**	**225100430**	-	
MGS-01 Corsa	1200	2005	2005	**225102860**	**225102863**	**225100490**	**225100493**	Pinza radiale | *Radial Caliper*
Norge	1200	2006	2006	**225101100**	**225101103**	**225100430**	-	
Norge GT 8V	1200	2010	2010	**225101100**	**225101103**	**225100430**	-	

Modello *Model*	**CC**	**Da** *From*	**A** *To*	RMS YOUR BEST PARTNER **Anteriore Organica** *Front Organic*	SINTER **Anteriore Sinterizzata** *Front Sintered*	RMS YOUR BEST PARTNER **Posteriore Organica** *Rear Organic*	SINTER **Posteriore Sinterizzata** *Rear Sintered*	**Note** *Notes*
Sport	1200	2007	2008	**225101100**	**225101103**	**225100430**	-	
Sport 4V	1200	2009	2011	**225101100**	**225101103**	**225100490**	**225100493**	
Sport 8V	1200	2012	2012	**225101100**	**225101103**	**225100430**	-	
Sport 8V SE	1200	2012	2012	**225101100**	**225101103**	**225100430**	-	
Stelvio	1200	2008	2011	**225101100**	**225101103**	**225100430**	-	
Stelvio 8V SE	1200	2012	2012	**225101100**	**225101103**	**225100430**	-	
Stelvio NTX	1200	2009	2011	**225101100**	**225101103**	**225100430**	-	
V Breva	1200	2008	2008	**225101100**	**225101103**	**225100430**	-	
Audace	1400	2016	2016	**225101100**	**225101103**	**225101010**	**225101013**	
California Custom	1400	2013	2013	**225101100**	**225101103**	**225101010**	**225101013**	
California Touring	1400	2013	2013	**225101100**	**225101103**	**225101010**	**225101013**	
California Touring SE	1400	2016	2016	**225101100**	**225101103**	**225101010**	**225101013**	
Eldorado	1400	2016	2016	**225101100**	**225101103**	**225101010**	**225101013**	
MGX-21 Flying Fortress	1400	2016	2016	**225101100**	**225101103**	-	-	
MOTO MORINI								
XE Country	250	1988	1988	**225100010**	**225100013**	-	-	
Coguaro	350	-	-	-	-	**225100010**	**225100013**	
Coguaro, New York	350	1990	1990	-	-	**225100010**	**225100013**	
Dart	350	1988	1988	-	-	**225100010**	**225100013**	
Dart	350	1990	1990	-	-	**225100010**	**225100013**	
Excalibur	350	1987	1987	**225100060**	**225100063**	-	-	
Indiana	350	1988	1988	-	-	**225100010**	**225100013**	
Kanguro	350	1988	1988	**225100060**	**225100063**	**225100010**	**225100013**	
RLX Excalibur	350	1990	1990	-	-	**225100010**	**225100013**	
Dart	400	1989	1989	-	-	**225100010**	**225100013**	
Dart	400	1990	1990	-	-	**225100010**	**225100013**	
S	400	-	-	**225100010**	**225100013**	**225100010**	**225100013**	
Sei V Classic	500	1989	1989	**225100010**	**225100013**	-	-	
Camel	501	1988	1988	**225100060**	**225100063**	**225100010**	**225100013**	
Coguaro	501	1989	1989	-	-	**225100010**	**225100013**	
Excalibur	501	1987	1987	**225100060**	**225100063**	-	-	
Excalibur	501	1989	1989	-	-	**225100010**	**225100013**	
New York	501	1989	1989	-	-	**225100010**	**225100013**	
RLX Excalibur	501	1990	1990	-	-	**225100010**	**225100013**	
Indiana	650	1988	1988	-	-	**225100010**	**225100013**	
Indiana	750	1988	1988	-	-	**225100010**	**225100013**	
9 1/2	1200	2006	2009	**225101100**	**225101103**	**225100490**	**225100493**	
Corsaro	1200	2006	2013	**225101100**	**225101103**	**225100490**	**225100493**	
Granferro	1200	2010	2010	**225102860**	**225102863**	**225100430**	-	
Granpasso	1200	2008	2008	**225101010**	**225101013**	**225100430**	-	
GT	1200	2010	2010	**225101010**	**225101013**	**225100430**	-	
Scrambler	1200	2009	2009	**225101010**	**225101013**	**225100430**	-	
Sport	1200	2008	2008	**225101100**	**225101103**	**225100490**	**225100493**	
MOTOR UNION								
JC 2B Deer	125	1998	1998	**225102630**	**225102633**	-	-	
HK Haoke	250	1997	1997	**225101070**	**225101073**	-	-	
MOTORHISPANIA								
MH Furia 6v	50	1999	1999	**225100080**	**225100083**	**225100080**	**225100083**	
MH Furia Max	50	2006	2006	**225100080**	**225100083**	**225100080**	**225100083**	
MH Urban Bike	50	2006	2006	**225100360**	**225100363**	**225100080**	**225100083**	
RX R	50	2008	2008	**225103160**	**225103163**	-	-	
RX Racing	50	2000	2000	**225100740**	-	**225100080**	**225100083**	
RYZ Enduro	50	2005	2005	**225100080**	**225100083**	**225100080**	**225100083**	
RYZ Supermotard	50	2005	2005	**225100740**	-	**225100080**	**225100083**	

Modello *Model*	**CC**	**Da** *From*	**A** *To*	RMS YOUR BEST PARTNER **Anteriore Organica** *Front Organic*	SINTER **Anteriore Sinterizzata** *Front Sintered*	RMS YOUR BEST PARTNER **Posteriore Organica** *Rear Organic*	SINTER **Posteriore Sinterizzata** *Rear Sintered*	**Note** *Notes*
MH7 Naked	125	2008	2008	**225103160**	**225103163**	-	-	
RX R	125	2008	2008	**225103160**	**225103163**	-	-	
RYZ Arena Enduro	125	2005	2005	**225100080**	**225100083**	**225100080**	**225100083**	
MOTRON								
Spike	50	1997	1997	**225100190**	**225100193**	-	-	
Sting	50	1995	1995	**225100190**	**225100193**	-	-	
Syncro	50	1997	1997	**225100190**	**225100193**	-	-	
Thunder	50	1995	1995	**225100190**	**225100193**	-	-	
MV AGUSTA								
Brutale	675	2012	2012	**225101100**	**225101103**	**225100490**	**225100493**	
F3	675	2011	2012	**225101100**	**225101103**	-	-	
F3	675	2013	2014	**225101100**	**225101103**	**225100490**	**225100493**	
F3	675	2015	2015	-	**225102923**	**225100490**	**225100493**	
F3 RC	675	2016	2016	-	**225102923**	**225100490**	**225100493**	
Brutale	800	2013	2013	**225101100**	**225101103**	**225100490**	**225100493**	
Brutale Dragster	800	2015	2015	**225101100**	**225101103**	**225100490**	**225100493**	
Brutale Dragster RC	800	2017	2017	**225101100**	**225101103**	**225100490**	**225100493**	
Brutale Dragster RR	800	2015	2015	**225101100**	**225101103**	**225100490**	**225100493**	
Brutale RR	800	2015	2015	**225101100**	**225101103**	**225100490**	**225100493**	
F3	800	2014	2014	-	**225102923**	-	-	
F3 RC	800	2016	2016	-	**225102923**	**225100490**	**225100493**	
Rivale	800	2013	2013	-	**225103193**	**225100490**	**225100493**	
Stradale	800	2015	2015	-	**225103193**	**225100490**	**225100493**	
Turismo Veloce	800	2014	2014	-	**225103193**	**225100490**	**225100493**	
Turismo Veloce Lusso	800	2014	2014	-	**225103193**	**225100490**	**225100493**	
Turismo Veloce RC	800	2017	2017	-	**225103193**	**225100490**	**225100493**	
Brutale	920	2012	2014	**225101100**	**225101103**	-	-	
Brutale R	989	2009	2009	**225101100**	**225101103**	-	-	
Brutale R	990	2010	2011	**225101100**	**225101103**	-	-	
F4 R	1000	2006	2007	**225102860**	**225102863**	-	-	
F4 R	1000	2012	2012	-	**225102923**	-	-	
F4 RC	1000	2015	2015	-	**225102923**	-	-	
F4 RR	1000	2012	2012	-	**225102923**	-	-	
Brutale RR	1078	2009	2009	-	**225102923**	-	-	
F4 CC	1078	2008	2011	-	**225102923**	-	-	
F4 RR	1078	2008	2011	-	**225102923**	-	-	
Brutale Corse	1090	2014	2014	-	**225102923**	-	-	
Brutale R	1090	2012	2012	**225101100**	**225101103**	-	-	
Brutale RR	1090	2010	2010	-	**225102923**	-	-	
MZ								
(MUZ) Moskito	50	1999	1999	**225100180**	-	-	-	
(MUZ) Moskito SX	50	2000	2000	**225100040**	-	-	-	
(MUZ) Moskito	125	1999	1999	**225100180**	-	-	-	
ETZ	125	1982	1982	**225103150**	**225103153**	-	-	
ETZ	125	1985	1985	**225103150**	**225103153**	-	-	
Mantizz S	125	2007	2007	**225102590**	**225102593**	-	-	
Roadstar	125	-	-	**225103150**	**225103153**	-	-	
RT	125	2006	2006	**225101070**	**225101073**	**225101070**	**225101073**	
SM, SX	125	1999	2001	-	-	**225101070**	**225101073**	
SM, SX	125	2002	2002	**225100580**	**225100583**	**225101070**	**225101073**	
Sportstar	125	1993	1993	**225103150**	**225103153**	-	-	
ETZ	150	1982	1982	**225103150**	**225103153**	-	-	
ETZ	150	1985	1985	**225103150**	**225103153**	-	-	
ETZ	250	1982	1982	**225103150**	**225103153**	-	-	

Modello *Model*	**CC**	**Da** *From*	**A** *To*	RMS YOUR BEST PARTNER **Anteriore Organica** *Front Organic*	SINTER **Anteriore Sinterizzata** *Front Sintered*	RMS YOUR BEST PARTNER **Posteriore Organica** *Rear Organic*	SINTER **Posteriore Sinterizzata** *Rear Sintered*	**Note** *Notes*
(MUZ) Sportstar	251	1996	1996	**225103150**	**225103153**	-	-	
ETZ	251	1989	1989	**225103150**	**225103153**	-	-	
Saxon Tour	251	-	-	**225103150**	**225103153**	-	-	
ETZ LUX	300	1990	1990	**225103150**	**225103153**	-	-	
ETZ X	300	1988	1988	**225103150**	**225103153**	-	-	
(MUZ) Sportstar	301	1996	1996	**225103150**	**225103153**	-	-	
ETZ	301	1990	1990	**225103150**	**225103153**	-	-	
Saxon Tour	301	-	-	**225103150**	**225103153**	-	-	
Saxon Country	500	1992	1992	**225103150**	**225103153**	-	-	
Saxon Fun	500	1992	1992	**225103150**	**225103153**	-	-	
Saxon Voyager	500	-	-	**225103150**	**225103153**	-	-	
Silver Star Classic	500	1993	1993	**225103150**	**225103153**	-	-	
(MUZ) Skorpion Cup	660	1999	1999	**225100520**	**225100523**	**225100010**	**225100013**	
(MUZ) Skorpion Replica	660	1997	1997	**225100520**	**225100523**	**225100010**	**225100013**	
(MUZ) Skorpion Sport	660	1995	1995	**225100520**	**225100523**	**225100010**	**225100013**	
(MUZ) Skorpion Tour	660	1995	1995	**225100520**	**225100523**	**225100010**	**225100013**	
(MUZ) Skorpion Traveller	660	1999	1999	**225100520**	**225100523**	**225100010**	**225100013**	
(MUZ) S	1000	2001	2002	**225101100**	**225101103**	**225100410**	**225100413**	
(MUZ) S	1000	2003	2003	**225103030**	**225103033**	**225103110**	**225103113**	
(MUZ) SF	1000	2005	2005	**225103030**	**225103033**	**225103110**	**225103113**	
(MUZ) SFX	1000	2007	2007	**225103030**	**225103033**	**225103110**	**225103113**	
(MUZ) SN	1000	2005	2005	**225103030**	**225103033**	**225103110**	**225103113**	
(MUZ) ST	1000	2007	2007	**225103030**	**225103033**	**225103110**	**225103113**	
NORTON								
Commando Cafe Racer	961	2011	2011	**225102860**	**225102863**	**225100490**	**225100493**	
Commando SE	961	2010	2011	**225101100**	**225101103**	**225100490**	**225100493**	
Commando SE	961	2012	2012	**225102860**	**225102863**	**225100490**	**225100493**	
Commando SF	961	2013	2013	**225102860**	**225102863**	**225100490**	**225100493**	
Commando SF Sport	961	2011	2011	**225101100**	**225101103**	**225100490**	**225100493**	
OSSA								
TR i	125	2015	2015	**225100640**	-	**225100650**	-	
TR i	250	2015	2015	**225100640**	-	**225100650**	-	
TR i	280	2010	2010	**225100640**	-	**225100650**	-	
TR i Explorer	280	2012	2012	**225100640**	-	**225100650**	-	
TR Factory R	300	2015	2015	-	-	**225100650**	-	
TR i	300	2015	2015	**225100640**	-	**225100650**	-	
Yanqee	500	1978	1978	**225103150**	**225103153**	**225100010**	**225100013**	
PEUGEOT								
Blaster	50	2009	2009	**225100080**	**225100083**	-	-	
Blaster Furios	50	2011	2011	**225100080**	**225100083**	**225100080**	**225100083**	
Blaster RS12	50	2009	2009	**225100080**	**225100083**	-	-	
Buxy	50	1994	1994	**225100080**	**225100083**	**225120090**	-	Impianto AJP | *AJP Caliper*
Buxy	50	1994	1994	**225100080**	**225100083**	**225120091**	-	Impianto AJP | *AJP Caliper*
Buxy	50	1994	1994	**225100190**	**225100193**	**225120090**	-	Impianto Brembo | *Brembo Caliper*
Buxy	50	1994	1994	**225100190**	**225100193**	**225120091**	-	Impianto Brembo | *Brembo Caliper*
Buxy	50	1994	1994	**225102800**	-	**225120090**	-	Impianto Heng Tong | *Heng Tong Caliper*
Buxy	50	1994	1994	**225102800**	-	**225120091**	-	Impianto Heng Tong | *Heng Tong Caliper*
CityStar	50	2014	2014	**225102620**	**225102623**	**225100490**	**225100493**	
Django Allure	50	2014	2014	**225102780**	-	-	-	
Django Evasion	50	2014	2014	**225102780**	-	-	-	
Django Heritage	50	2014	2014	**225101620**	-	-	-	
Django Sport	50	2014	2014	**225102780**	-	-	-	
Elyseo	50	1999	2001	**225100080**	**225100083**	-	-	Impianto AJP | *AJP Caliper*
Elyseo	50	2002	2002	**225100080**	**225100083**	**225100080**	**225100083**	

Modello *Model*	**CC**	**Da** *From*	**A** *To*	RMS YOUR BEST PARTNER **Anteriore Organica** *Front Organic*	SINTER **Anteriore Sinterizzata** *Front Sintered*	RMS YOUR BEST PARTNER **Posteriore Organica** *Rear Organic*	SINTER **Posteriore Sinterizzata** *Rear Sintered*	**Note** *Notes*
Elystar	50	2003	2003	**225100080**	**225100083**	**225102810**	-	
Jet C-Tech	50	2009	2009	**225100080**	**225100083**	**225100080**	**225100083**	
Jet-Force	50	2003	2003	**225100080**	**225100083**	**225100080**	**225100083**	
Kisbee	50	2010	2010	**225102800**	-	-	-	
Kisbee RS	50	2011	2011	**225102800**	-	-	-	
Looxor	50	2002	2005	**225100080**	**225100083**	-	-	
Looxor	50	2006	2006	**225100080**	**225100083**	**225100080**	**225100083**	
Ludix	50	2004	2004	**225100080**	**225100083**	-	-	
Speedake	50	1994	1994	**225100080**	**225100083**	-	-	Impianto AJP | *AJP Caliper*
Speedake	50	1994	1994	**225100190**	**225100193**	-	-	Impianto Brembo | *Brembo Caliper*
Speedake	50	1994	1994	**225102800**	-	-	-	Impianto Heng Tong | *Heng Tong Caliper*
Speedfig	50	1996	1996	**225100080**	**225100083**	-	-	Impianto AJP | *AJP Caliper*
Speedfig	50	1996	1996	**225100190**	**225100193**	-	-	Impianto Brembo | *Brembo Caliper*
Speedfig	50	1996	1996	**225102800**	-	-	-	Impianto Heng Tong | *Heng Tong Caliper*
Speedfight 2 A/C	50	2001	2001	**225100080**	**225100083**	-	-	
Speedfight 2 L/C	50	2001	2001	**225100080**	**225100083**	**225100080**	**225100083**	
Speedfight 2 L/C Furious, 206 WRC	50	2001	2001	**225100080**	**225100083**	**225100080**	**225100083**	
Speedfight 3 (AC)	50	2010	2010	**225102590**	**225102593**	-	-	
Speedfight 3 (LC)	50	2010	2010	**225102590**	**225102593**	**225100490**	**225100493**	
Speedfight 3 RS (LC)	50	2010	2010	**225102590**	**225102593**	**225100490**	**225100493**	
Speedfight 4 (AC)	50	2015	2015	**225102590**	**225102593**	-	-	
Speedfight 4 (LC)	50	2015	2015	**225102590**	**225102593**	**225100490**	**225100493**	
Speedfight LBD/LBDP	50	2000	2000	**225100080**	**225100083**	**225100080**	**225100083**	
Speedfight Lemans	50	2011	2011	**225100080**	**225100083**	**225100080**	**225100083**	
Squab	50	1994	1994	**225100080**	**225100083**	-	-	Impianto AJP | *AJP Caliper*
Squab	50	1994	1994	**225102800**	-	-	-	Impianto Heng Tong | *Heng Tong Caliper*
SV Geo	50	1992	1992	**225102630**	**225102633**	-	-	
SV Geo	50	1993	1993	**225102630**	**225102633**	-	-	
SV L	50	1993	1993	**225102630**	**225102633**	-	-	
SV Roland Garros	50	1993	1993	**225101200**	-	-	-	
SV Sport	50	1993	1993	**225101200**	-	-	-	
TKR Furious	50	2005	2005	**225100080**	**225100083**	-	-	
TKR WRC	50	2005	2005	**225100080**	**225100083**	-	-	
Trekker Metal-X	50	2001	2001	**225100080**	**225100083**	-	-	
Trekker Offroad	50	1999	1999	**225102800**	-	-	-	
Trekker Road	50	1999	1999	**225100080**	**225100083**	-	-	
Trekker Streetboard	50	2000	2000	**225100080**	**225100083**	-	-	
Trekker Urban Black	50	2000	2000	**225100080**	**225100083**	-	-	
Tweet	50	2010	2013	**225102750**	**225102753**	-	-	
Tweet Evo	50	2014	2014	**225102750**	**225102753**	-	-	
Tweet Evo RS	50	2014	2014	**225102750**	**225102753**	**225100300**	**225100303**	
Tweet RS	50	2010	2013	**225102750**	**225102753**	**225100300**	**225100303**	
V-Clic	50	2008	2008	**225100180**	-	-	-	
Vivacity	50	1999	2007	**225100080**	**225100083**	-	-	Impianto AJP | *AJP Caliper*
Vivacity	50	2005	2005	**225102800**	-	-	-	Impianto Heng Tong | *Heng Tong Caliper*
Vivacity	50	2008	2008	**225101440**	-	-	-	
XP 6 Enduro	50	2006	2006	**225100080**	**225100083**	**225100080**	**225100083**	
XP 6 Supermotard	50	2006	2006	**225100080**	**225100083**	**225100080**	**225100083**	
XP 6 Trail	50	2004	2005	**225100080**	**225100083**	**225100080**	**225100083**	
XP S-6 Enduro	50	2002	2002	**225100080**	**225100083**	**225100080**	**225100083**	
XP S-6 Supermotard	50	2004	2004	**225100360**	**225100363**	**225100080**	**225100083**	
XR 6 Race Spec	50	2002	2007	**225100740**	-	**225100080**	**225100083**	
XR 7	50	2008	2008	**225103160**	**225103163**	**225100080**	**225100083**	
Zenith Luxe	50	1994	1994	**225100190**	**225100193**	**225120090**	-	

Modello *Model*	**CC**	**Da** *From*	**A** *To*	RMS YOUR BEST PARTNER **Anteriore Organica** *Front Organic*	SINTER **Anteriore Sinterizzata** *Front Sintered*	RMS YOUR BEST PARTNER **Posteriore Organica** *Rear Organic*	SINTER **Posteriore Sinterizzata** *Rear Sintered*	**Note** *Notes*
Zenith Luxe	50	1994	1994	**225100190**	**225100193**	**225120091**	-	
SV Geo	80	1991	1992	**225102630**	**225102633**	-	-	
SV Geo	80	1993	1993	**225102630**	**225102633**	-	-	
Elyseo	100	1999	2001	**225100080**	**225100083**	-	-	Impianto AJP | *AJP Caliper*
Elyseo	100	2002	2002	**225100080**	**225100083**	**225100080**	**225100083**	
Looxor	100	2002	2002	**225100080**	**225100083**	**225100080**	**225100083**	
Speedfight	100	2000	2000	**225100080**	**225100083**	**225100080**	**225100083**	
Speedfight 2, X-Race	100	2001	2001	**225100080**	**225100083**	**225100080**	**225100083**	
Trekker Road	100	1999	1999	**225100080**	**225100083**	-	-	
Vivacity	100	1999	2007	**225100080**	**225100083**	-	-	Impianto AJP | *AJP Caliper*
Vivacity	100	2005	2005	**225102800**	-	-	-	Impianto Heng Tong | *Heng Tong Caliper*
Active	125	2013	2013	**225102620**	**225102623**	**225100490**	**225100493**	
CityStar	125	2011	2011	**225102620**	**225102623**	**225100490**	**225100493**	
Django Allure	125	2014	2014	**225102780**	-	**225101200**	-	
Django Evasion	125	2014	2014	**225102780**	-	**225101200**	-	
Django Heritage	125	2014	2014	**225101620**	-	**225100490**	**225100493**	
Django Sport	125	2014	2014	**225102780**	-	**225101200**	-	
Elyseo	125	1999	1999	**225100080**	**225100083**	-	-	Impianto AJP | *AJP Caliper*
Elyseo	125	2000	2000	**225100360**	**225100363**	**225102810**	-	
Elystar	125	2003	2003	**225100360**	**225100363**	**225102810**	-	
Geopolis	125	2006	2006	**225102620**	**225102623**	**225102810**	-	
Geopolis	125	2007	2007	**225101620**	-	**225101620**	-	Impianto Nissin | *Nissin Caliper*
GT Satelis Sport	125	2011	2011	**225101620**	-	**225101620**	-	
Jet-Force Compressor	125	2003	2003	**225100360**	**225100363**	**225102810**	-	
Looxor	125	2003	2003	**225100970**	**225100973**	**225102810**	-	
Ludix	125	2004	2004	**225100080**	**225100083**	-	-	
LXR	125	2010	2010	**225102750**	**225102753**	**225103230**	-	
RS Geopolis	125	2010	2010	**225102620**	**225102623**	**225102810**	-	
Satelis	125	2004	2005	**225100080**	**225100083**	**225102810**	-	
Satelis	125	2006	2006	**225100360**	**225100363**	**225102810**	-	
Satelis ABS	125	2004	2004	**225100870**	**225100873**	**225102810**	-	
Satelis Black Ed.	125	2017	2017	**225102780**	-	-	-	
SV C Executive	125	1996	1996	**225102630**	**225102633**	-	-	
SV Executive	125	1994	1994	**225102630**	**225102633**	-	-	
SV Geo	125	1991	1992	**225102630**	**225102633**	**225120090**	-	
SV Geo	125	1991	1992	**225102630**	**225102633**	**225120091**	-	
SV Geo	125	1993	1993	**225102630**	**225102633**	**225120090**	-	
SV Geo	125	1993	1993	**225102630**	**225102633**	**225120091**	-	
Tweet	125	2010	2013	**225102750**	**225102753**	-	-	
Tweet Evo	125	2014	2014	**225102750**	**225102753**	**225100300**	**225100303**	
Tweet Evo RS	125	2014	2014	**225102750**	**225102753**	**225100300**	**225100303**	
Tweet RS	125	2010	2013	**225102750**	**225102753**	**225100300**	**225100303**	
Vivacity	125	2010	2010	**225101620**	-	-	-	
XPS CT	125	2006	2006	**225100080**	**225100083**	**225100080**	**225100083**	
Django Allure	150	2014	2014	**225102780**	-	**225101200**	-	
Django Evasion	150	2014	2014	**225102780**	-	**225101200**	-	
Django Heritage	150	2014	2014	**225101620**	-	**225100490**	**225100493**	
Django Sport	150	2014	2014	**225102780**	-	**225101200**	-	
Elyseo	150	2000	2000	**225100360**	**225100363**	**225102810**	-	
Elystar	150	2003	2003	**225100360**	**225100363**	**225102810**	-	
Tweet	150	2010	2013	**225102750**	**225102753**	-	-	
Tweet RS	150	2010	2013	**225102750**	**225102753**	**225100300**	**225100303**	
CityStar	200	2013	2013	**225102620**	**225102623**	**225100490**	**225100493**	
LXR	200	2010	2010	**225102750**	**225102753**	**225103230**	-	

Modello *Model*	**CC**	**Da** *From*	**A** *To*	**Anteriore Organica** *Front Organic*	**Anteriore Sinterizzata** *Front Sintered*	**Posteriore Organica** *Rear Organic*	**Posteriore Sinterizzata** *Rear Sintered*	**Note** *Notes*
Geopolis	250	2006	2006	**225102620**	**225102623**	**225102620**	**225102623**	
Satelis	250	2006	2006	**225102620**	**225102623**	**225102620**	**225102623**	
Geopolis GT	300	2014	2014	**225100870**	**225100873**	**225101620**	-	
Geopolis Premiu	300	2010	2010	**225101620**	-	**225101620**	-	Impianto Nissin | *Nissin Caliper*
Geopolis RS	300	2010	2010	**225101620**	-	**225101620**	-	Impianto Nissin | *Nissin Caliper*
Geostyle	300	2010	2010	**225101620**	-	**225101620**	-	Impianto Nissin | *Nissin Caliper*
Satelis	300	2013	2013	**225101620**	-	**225101620**	-	
Geopolis	400	2007	2007	**225100360**	**225100363**	**225102810**	-	Impianto AJP | *AJP Caliper*
Geopolis	400	2007	2007	**225101620**	-	**225101620**	-	Impianto Nissin | *Nissin Caliper*
Geopolis GT	400	2014	2014	**225100870**	**225100873**	**225101620**	-	
Geopolis RS	400	2008	2008	**225100870**	**225100873**	**225101620**	-	
Metropolis	400	2015	2015	-	**225103513**	-	**225103513**	
Satelis i	400	2014	2014	**225100870**	**225100873**	**225101620**	-	
Satelis	500	2006	2006	**225100490**	**225100493**	**225100490**	**225100493**	
Satelis	500	2007	2007	**225100870**	**225100873**	**225101620**	-	
Satelis ABS	600	2004	2004	**225100870**	**225100873**	**225102810**	-	
PGO								
Big Max	50	1994	2002	**225100180**	-	-	-	
Big Max	50	2003	2003	**225100040**	-	-	-	
Big Max Sport	50	1996	1996	**225100180**	-	-	-	
Bugrider	50	2006	2006	-	-	**225101440**	-	
Comet	50	1991	1991	**225100040**	-	-	-	
Comet	50	1993	1993	**225100180**	-	-	-	
Dr. Big	50	2001	2001	**225102750**	**225102753**	-	-	
EPS	50	1996	1996	**225100180**	-	-	-	
Galaxy	50	1991	1991	**225100040**	-	-	-	
G-Max	50	2006	2006	**225102750**	**225102753**	-	-	
G-Max Doppler	50	2006	2006	**225100010**	**225100013**	-	-	
Hot	50	1997	1997	**225100180**	-	-	-	
Libra	50	2010	2010	**225102750**	**225102753**	-	-	
Ligero	50	2006	2006	**225102750**	**225102753**	-	-	
Mega	50	1996	1996	**225100180**	-	-	-	
PMS	50	1999	1999	**225102750**	**225102753**	-	-	
PMX	50	1997	2003	**225100180**	-	-	-	
PMX Naked	50	2006	2006	**225102750**	**225102753**	-	-	
PMX Sport	50	2001	2001	**225102750**	**225102753**	-	-	
PS	50	1993	1993	**225100040**	-	-	-	
Road 66	50	1995	1995	**225100040**	-	-	-	
Rodoshow	50	2001	2001	**225103210**	-	-	-	
Tornado	50	1996	1996	**225100180**	-	-	-	
T-Rex	50	1999	1999	**225102750**	**225102753**	-	-	
T-Rex 3 (TR3-50)	50	2002	2002	**225102650**	**225102653**	-	-	
X-Rider	50	2003	2003	-	-	**225100040**	-	
Big Max	80	1994	1994	**225100180**	-	-	-	
Big Max	90	1997	1997	**225100180**	-	-	-	
Galaxy	90	1992	1992	**225100040**	-	-	-	
Rodoshow	90	2002	2002	**225103210**	-	-	-	
Tornado	90	2000	2000	**225100180**	-	-	-	
Big Max	100	1996	1996	**225100180**	-	-	-	
My Bubu	100	2002	2002	**225102750**	**225102753**	-	-	
PMX	110	2000	2000	**225100180**	-	-	-	
T-Rex	110	1999	1999	**225102750**	**225102753**	-	-	
Charge A, B	125	2002	2002	**225102750**	**225102753**	-	-	
I-Charge Fuel Injection	125	2003	2003	**225100580**	**225100583**	-	-	

Modello *Model*	**CC**	**Da** *From*	**A** *To*	**Anteriore Organica** *Front Organic*	**Anteriore Sinterizzata** *Front Sintered*	**Posteriore Organica** *Rear Organic*	**Posteriore Sinterizzata** *Rear Sintered*	**Note** *Notes*
Kung Fu	125	-	-	-	-	**225100180**	-	
Libra	125	2010	2010	**225101420**	**225101423**	-	-	
Ligero	125	2006	2006	**225102750**	**225102753**	-	-	
My Bubu, Young Bubu	125	2002	2002	**225102750**	**225102753**	-	-	
Tornado	125	1996	1996	**225100180**	-	-	-	
T-Rex (2 stroke)	125	1999	1999	**225102750**	**225102753**	-	-	
T-Rex (4 stroke)	125	1999	1999	**225102750**	**225102753**	-	-	
X-Hot	125	2010	2010	**225101420**	**225101423**	-	-	
X-Rider	125	2003	2003	-	-	**225100040**	-	
BR Bugxter	150	2005	2005	-	-	**225101440**	-	
TR3	150	2002	2002	**225102750**	**225102753**	-	-	
T-Rex	150	2001	2001	**225102750**	**225102753**	-	-	
X-Rider	150	2003	2003	-	-	**225100040**	-	
G-Max	250	2006	2006	**225100520**	**225100523**	-	-	
BR i Racer	500	2007	2007	-	-	**225103070**	**225103073**	
Bug	500	2008	2008	-	-	**225103070**	**225103073**	
PIAGGIO								
AJP Caliper incl. pin/spring Zip II Cat DT	25	2001	2001	**225100080**	**225100083**	**225120350**	-	
Zip II Cat DT	25	2001	2001	**225103500**	-	-	-	
Ape Euro 2	50	2003	2010	**225120170**	-	**225120220**	-	
Ape Euro 2	50	2003	2010	**225120170**	-	**225120221**	-	
Ape FL3 Europa	50	1996	1999	**225120170**	-	**225120220**	-	
Ape FL3 Europa	50	1996	1999	**225120170**	-	**225120221**	-	
Ape FL-FL2	50	1989	1995	**225120170**	-	**225120220**	-	
Ape FL-FL2	50	1989	1995	**225120170**	-	**225120221**	-	
Ape P50	50	1980	1985	**225120170**	-	**225120220**	-	
Ape P50	50	1980	1985	**225120170**	-	**225120221**	-	
Ape RST Mix	50	1999	2005	**225120170**	-	**225120220**	-	
Ape RST Mix	50	1999	2005	**225120170**	-	**225120221**	-	
Ape TM P50	50	1985	1989	**225120170**	-	**225120220**	-	
Ape TM P50	50	1985	1989	**225120170**	-	**225120221**	-	
BOSS 50	50	1988	-	-	-	**225120230**	-	
BOXER 50	50	-	-	**225120190**	-	**225120230**	-	
BRAVO 50	50	-	-	**225120190**	-	**225120230**	-	
BRAVO 50 (ruote in lega mozzo 90mm)	50	1987	-	-	-	**225120230**	-	
BRAVO 50 (ruote in lega)	50	1987	-	**225120200**	-	**225120230**	-	
CIAO 50	50	-	-	**225120190**	-	**225120230**	-	
CIAO 50 (ruote in lega)	50	1987	-	**225120200**	-	**225120230**	-	
CIAO 50 MIX	50	1997	-	-	-	**225120230**	-	
Diesis	50	2002	2002	**225100080**	**225100083**	-	-	
Fly	50	2005	2005	**225102620**	**225102623**	**225120560**	-	
Free (Freno A Disco - *Brake disc model*)	50	1993	1996	**225103500**	-	-	-	
Free (Freno A Disco - *Brake disc model*)	50	1997	1997	**225100190**	**225100193**	-	-	
FREE 50	50	1993	1995	**225120190**	-	-	-	
GRILLO 50	50	1989	-	**225120200**	-	**225120230**	-	
Liberty	50	1997	2014	**225100300**	**225100303**	**225120560**	-	
Liberty 4T	50	2000	2000	**225100300**	**225100303**	**225120560**	-	
New Liberty S	50	2016	2016	**225100040**	-	-	-	
NRG	50	1996	2000	**225103500**	-	**225120360**	-	
NRG Extreme	50	2001	2001	**225100190**	**225100193**	-	-	
NRG mc2	50	1997	1999	**225100190**	**225100193**	**225120360**	-	
NRG mc3 DD	50	2002	2002	**225100190**	**225100193**	**225100190**	**225100193**	
NRG mc3 DT	50	2002	2002	**225100190**	**225100193**	-	-	
NRG Power DD	50	2005	2005	**225100190**	**225100193**	**225100190**	**225100193**	

Modello *Model*	**CC**	**Da** *From*	**A** *To*	RMS YOUR BEST PARTNER **Anteriore Organica** *Front Organic*	SINTER **Anteriore Sinterizzata** *Front Sintered*	RMS YOUR BEST PARTNER **Posteriore Organica** *Rear Organic*	SINTER **Posteriore Sinterizzata** *Rear Sintered*	**Note** *Notes*
NRG Power DD	50	2006	2006	**225100040**	-	**225100190**	**225100193**	
NRG Purejet	50	2005	2005	**225100190**	**225100193**	**225100190**	**225100193**	
NRG Purejet	50	2006	2006	**225100040**	-	**225100190**	**225100193**	
NRG.1	50	1994	1995	**225100190**	**225100193**	**225120301**	-	
NTT	50	1996	1996	**225103500**	-	**225120360**	-	
Quartz	50	1992	1992	**225100160**	-	**225120301**	-	
RST Sfera	50	1995	1995	**225103500**	-	**225120360**	-	
Sfera	50	1991	1991	-	-	**225120301**	-	
SI 50	50	-	-	**225120190**	-	**225120230**	-	
SI 50 (ruote in lega)	50	1980	-	**225120200**	-	**225120230**	-	
SI 50 MIX	50	1997	-	-	-	**225120230**	-	
Storm	50	1994	1995	**225100190**	**225100193**	**225120301**	-	
Storm	50	1996	1996	**225103500**	-	**225120301**	-	
SUPER BRAVO 50	50	1985	-	**225120190**	-	**225120230**	-	
SUPERBRAVO 50 3 Marce	50	1987	-	**225120200**	-	-	-	
TPH	50	1993	1995	**225100190**	**225100193**	**225120301**	-	
TPH	50	1996	1996	**225103500**	-	**225120360**	-	
TPH 2T	50	2011	2011	**225102620**	**225102623**	-	-	
Typhoon	50	1994	1995	**225100190**	**225100193**	**225120301**	-	
Typhoon	50	1996	1996	**225103500**	-	-	-	
Typhoon	50	2006	2006	**225100040**	-	-	-	
Typhoon Catalyzed	50	2002	2002	**225100190**	**225100193**	**225100190**	**225100193**	
Vespa 50	50	-	-	**225120170**	-	**225120491**	-	
Vespa 50 Special	50	-	-	**225120170**	-	**225120180**	-	
Vespa ET2	50	1997	1997	**225100300**	**225100303**	**225120350**	-	
Vespa ET4	50	2000	2000	**225100300**	**225100303**	**225120350**	-	
Vespa FL	50	1990	-	**225120160**	-	**225120160**	-	
Vespa FL	50	1990	-	**225120161**	-	**225120161**	-	
Vespa FL	50	1990	-	**225120570**	-	**225120570**	-	
Vespa LX 2T/4T	50	2005	2005	**225100300**	**225100303**	**225120350**	-	
Vespa LXV	50	2008	2008	**225100190**	**225100193**	-	-	
Vespa PK	50	-	-	**225120170**	-	**225120160**	-	
Vespa PK	50	-	-	**225120170**	-	**225120161**	-	
Vespa PK	50	-	-	**225120170**	-	**225120570**	-	
Vespa PK XL	50	1986	-	**225120170**	-	**225120160**	-	
Vespa PK XL	50	1986	-	**225120170**	-	**225120161**	-	
Vespa PK XL	50	1986	-	**225120170**	-	**225120570**	-	
Vespa PK XL	50	-	-	**225120160**	-	**225120160**	-	
Vespa PK XL	50	-	-	**225120161**	-	**225120161**	-	
Vespa PK XL	50	-	-	**225120570**	-	**225120570**	-	
Vespa Primavera	50	2014	2014	**225102620**	**225102623**	-	-	
Vespa S 2T	50	2007	2007	**225100300**	**225100303**	-	-	
Vespa S 4T	50	2009	2009	**225100300**	**225100303**	-	-	
Vespa S College 4T	50	2011	2011	**225100190**	**225100193**	-	-	
Vespa Sprint	50	2015	2015	**225102620**	**225102623**	-	-	
VESPINO 50	50	1980	-	**225120200**	-	-	-	
VESPINO 50	50	-	1979	**225120190**	-	-	-	
Zip	50	1992	1993	-	-	**225120301**	-	
Zip & Zip	50	1994	1994	**225103210**	-	**225120301**	-	
Zip Disco	50	1996	1996	**225100300**	**225100303**	**225120350**	-	
Zip Fast Rider	50	1993	1995	**225100190**	**225100193**	**225120360**	-	
Zip Fast Rider	50	1996	1996	**225100300**	**225100303**	**225120350**	-	
Zip II	50	2001	2001	**225103500**	-	**225120350**	-	
Zip II Cat DT	50	2001	2001	**225103500**	-	**225120350**	-	

Modello *Model*	**CC**	**Da** *From*	**A** *To*	RMS YOUR BEST PARTNER **Anteriore Organica** *Front Organic*	SINTER **Anteriore Sinterizzata** *Front Sintered*	RMS YOUR BEST PARTNER **Posteriore Organica** *Rear Organic*	SINTER **Posteriore Sinterizzata** *Rear Sintered*	**Note** *Notes*
Zip RST	50	1996	1997	**225100300**	**225100303**	-	-	
Zip RST	50	1998	1999	**225100300**	**225100303**	-	-	
Zip Sport Production	50	1996	1996	**225100300**	**225100303**	-	-	
Sfera	80	1994	1994	-	-	**225120301**	-	
Skipper	80	1993	1995	**225100160**	-	-	-	
Skipper	80	1996	1996	**225103500**	-	-	-	
Typhoon	80	1996	1996	**225103500**	-	-	-	
Diesis	100	2002	2002	**225100080**	**225100083**	-	-	
Fly	100	2007	2007	**225102620**	**225102623**	**225120421**	-	
Free	100	2002	2002	**225100190**	**225100193**	-	-	
Zip	100	2007	2007	**225102620**	**225102623**	**225120421**	-	
946	125	2014	2014	**225102620**	**225102623**	**225100450**	**225100453**	
Beverly	125	2002	2002	**225102620**	**225102623**	**225102620**	**225102623**	
Carnaby	125	2008	2008	**225102620**	**225102623**	**225102620**	**225102623**	
Fly	125	2005	2005	**225102620**	**225102623**	**225120421**	-	
GTX SuperHexagon (Ruota 11")	125	2000	2000	**225100360**	**225100363**	**225100450**	**225100453**	Impianto Grimeca | *Grimeca Caliper*
GTX SuperHexagon (Ruota 11")	125	2000	2000	**225102620**	**225102623**	**225100450**	**225100453**	Impianto Heng Tong | *Heng Tong Caliper*
GTX SuperHexagon (Ruota 12")	125	2001	2001	**225102620**	**225102623**	**225100450**	**225100453**	Impianto Heng Tong | *Heng Tong Caliper*
Hexagon	125	1994	1995	**225100190**	**225100193**	**225120350**	-	
LE Liberty	125	1999	1999	**225100300**	**225100303**	**225120421**	-	
Liberty iGet 4T 3V	125	2017	2017	**225103340**	**225103343**	-	-	
LX Hexagon	125	1999	1999	**225100360**	**225100363**	**225120421**	-	
LX Skipper, ST	125	1999	1999	**225100360**	**225100363**	**225120421**	-	
LX4 Hexagon	125	1999	1999	**225100360**	**225100363**	**225120350**	-	
Medley	125	2016	2016	**225103340**	**225103343**	**225102600**	**225102603**	
Medley S	125	2017	2017	**225103340**	**225103343**	**225102600**	**225102603**	
MP3	125	2006	2007	**225100300**	**225100303**	**225100780**	-	
MP3 Efi	125	2008	2011	**225100300**	**225100303**	**225102600**	**225102603**	
MP3 Hybrid	125	2009	2012	**225100300**	**225100303**	**225102600**	**225102603**	
MP3 Yourban	125	2011	2012	**225100300**	**225100303**	**225102600**	**225102603**	
New Liberty	125	2016	2016	**225103340**	**225103343**	-	-	
Sfera	125	1995	1995	**225100300**	**225100303**	**225120350**	-	
Skipper	125	1993	1995	**225100160**	-	**225120350**	-	
Skipper	125	1996	1998	**225103500**	-	-	-	
SKR	125	1994	1994	**225100190**	**225100193**	-	-	
TPH	125	1996	1996	**225103500**	-	**225120350**	-	
Typhoon	125	1996	1996	**225103500**	-	-	-	
Typhoon Catalyzed	125	2002	2002	**225100190**	**225100193**	**225100190**	**225100193**	
Vespa 125	125	1951	1962	**225120170**	-	**225120550**	-	
Vespa 125	125	1963	1972	**225120170**	-	**225120530**	-	
Vespa 125	125	1963	1972	**225120170**	-	**225120531**	-	
Vespa Cosa	125	1990	-	**225120511**	-	**225120501**	-	
Vespa ET4	125	1996	1996	**225100300**	**225100303**	**225120350**	-	
Vespa GT L	125	2004	2004	**225102620**	**225102623**	**225100450**	**225100453**	
Vespa GTS	125	2007	2007	**225102620**	**225102623**	**225100450**	**225100453**	
Vespa GTS Super	125	2010	2013	**225102620**	**225102623**	**225100450**	**225100453**	
Vespa GTS Super i.e.	125	2015	2015	**225102620**	**225102623**	**225100450**	**225100453**	
Vespa GTS Supersport	125	2013	2013	**225102620**	**225102623**	**225100450**	**225100453**	
Vespa GTV	125	2008	2008	**225102620**	**225102623**	**225100450**	**225100453**	
Vespa LX 4T	125	2005	2005	**225100300**	**225100303**	-	-	
Vespa LXV	125	2008	2008	**225100190**	**225100193**	-	-	
Vespa PK - PK XL	125	-	-	**225120160**	-	**225120160**	-	
Vespa PK - PK XL	125	-	-	**225120161**	-	**225120161**	-	
Vespa PK - PK XL	125	-	-	**225120570**	-	**225120570**	-	

Modello *Model*	**CC**	**Da** *From*	**A** *To*	RMS YOUR BEST PARTNER **Anteriore Organica** *Front Organic*	SINTER **Anteriore Sinterizzata** *Front Sintered*	RMS YOUR BEST PARTNER **Posteriore Organica** *Rear Organic*	SINTER **Posteriore Sinterizzata** *Rear Sintered*	**Note** *Notes*
Vespa Primavera	125	2014	2014	**225102620**	**225102623**	-	-	
Vespa Primavera - Et3	125	-	-	**225120170**	-	**225120180**	-	
Vespa Primavera 70	125	2016	2016	**225102620**	**225102623**	-	-	
Vespa PX	125	2002	2002	**225100300**	**225100303**	-	-	
Vespa PX	125	-	-	**225120160**	-	**225120160**	-	
Vespa PX	125	-	-	**225120161**	-	**225120161**	-	
Vespa PX	125	-	-	**225120570**	-	**225120570**	-	
Vespa PX 70	125	2016	2016	**225100300**	**225100303**	-	-	
Vespa PX125E (Freno A Disco - *Brake disc model*)	125	1998	-	**225100160**	-	**225120160**	-	
Vespa PX125E (Freno A Disco - *Brake disc model*)	125	1998	-	**225100160**	-	**225120161**	-	
Vespa PX125E (Freno A Disco - *Brake disc model*)	125	1998	-	**225100160**	-	**225120570**	-	
Vespa PXE Arcobaleno	125	-	-	**225120160**	-	**225120160**	-	
Vespa PXE Arcobaleno	125	-	-	**225120161**	-	**225120161**	-	
Vespa PXE Arcobaleno	125	-	-	**225120570**	-	**225120570**	-	
Vespa S 4T	125	2007	2007	**225100300**	**225100303**	-	-	
Vespa Sprint	125	2016	2016	**225102620**	**225102623**	-	-	
Vespa Sprint S	125	2017	2017	**225102620**	**225102623**	-	-	
Vespa Sprint Sport	125	2017	2017	**225102620**	**225102623**	-	-	
X10 Executive	125	2013	2013	**225102600**	**225102603**	**225102600**	**225102603**	Pinza destra | *Right Caliper*
X10 Executive	125	2013	2013	**225102620**	**225102623**	**225102600**	**225102603**	Pinza sinistra | *Left Caliper*
X7	125	2008	2008	**225102620**	**225102623**	**225102600**	**225102603**	
X8	125	2004	2004	**225102620**	**225102623**	**225100490**	**225100493**	
X8	125	2005	2005	**225102620**	**225102623**	**225100780**	-	
X9	125	2001	2003	**225100490**	**225100493**	**225100490**	**225100493**	
X9	125	2004	2004	**225102600**	**225102603**	**225100490**	**225100493**	Pinza destra | *Right Caliper*
X9	125	2004	2004	**225102620**	**225102623**	**225100490**	**225100493**	Pinza sinistra | *Left Caliper*
X9 Evolution	125	2006	2006	**225102600**	**225102603**	**225100490**	**225100493**	Pinza destra | *Right Caliper*
X9 Evolution	125	2006	2006	**225102620**	**225102623**	**225100490**	**225100493**	Pinza sinistra | *Left Caliper*
Xevo	125	2008	2008	**225102620**	**225102623**	**225102600**	**225102603**	
Zip II 4T	125	2000	2000	**225100300**	**225100303**	**225120350**	-	
Fly	150	2006	2006	**225102620**	**225102623**	**225120421**	-	
Hexagon	150	1994	1994	**225100190**	**225100193**	**225120350**	-	
Liberty	150	1999	1999	**225100300**	**225100303**	**225120421**	-	
Medley	150	2016	2016	**225103340**	**225103343**	**225102600**	**225102603**	
Skipper	150	1993	1993	**225100160**	-	-	-	
Vespa 150	150	1951	1962	**225120170**	-	**225120550**	-	
Vespa 150	150	1963	1972	**225120170**	-	**225120530**	-	
Vespa 150	150	1963	1972	**225120170**	-	**225120531**	-	
Vespa Cosa	150	1990	-	**225120511**	-	**225120501**	-	
Vespa ET4	150	2002	2002	**225100300**	**225100303**	-	-	
Vespa LX	150	2008	2008	**225100190**	**225100193**	-	-	
Vespa Primavera	150	2014	2014	**225102620**	**225102623**	-	-	
Vespa PX	150	2002	2002	**225100300**	**225100303**	-	-	
Vespa PX	150	-	-	**225120160**	-	**225120160**	-	
Vespa PX	150	-	-	**225120161**	-	**225120161**	-	
Vespa PX	150	-	-	**225120570**	-	**225120570**	-	
Vespa PX150E (Freno A Disco - *Brake disc model*)	150	1998	-	**225100160**	-	**225120160**	-	
Vespa PX150E (Freno A Disco - *Brake disc model*)	150	1998	-	**225100160**	-	**225120161**	-	
Vespa PX150E (Freno A Disco - *Brake disc model*)	150	1998	-	**225100160**	-	**225120570**	-	
Vespa PXE Arcobaleno	150	-	-	**225120160**	-	**225120160**	-	
Vespa PXE Arcobaleno	150	-	-	**225120161**	-	**225120161**	-	
Vespa PXE Arcobaleno	150	-	-	**225120570**	-	**225120570**	-	
Vespa Sprint Veloce	150	-	-	**225120520**	-	**225120160**	-	
Vespa Sprint Veloce	150	-	-	**225120520**	-	**225120161**	-	

Modello *Model*	**CC**	**Da** *From*	**A** *To*	RMS YOUR BEST PARTNER **Anteriore Organica** *Front Organic*	SINTER **Anteriore Sinterizzata** *Front Sintered*	RMS YOUR BEST PARTNER **Posteriore Organica** *Rear Organic*	SINTER **Posteriore Sinterizzata** *Rear Sintered*	**Note** *Notes*
Vespa Sprint Veloce	150	-	-	**225120520**	-	**225120570**	-	
Vespa Super	150	-	-	**225120170**	-	**225120540**	-	
X8 Street	150	2006	2006	**225102620**	**225102623**	-	-	
Vespa GS	160	-	-	**225120520**	-	**225120160**	-	
Vespa GS	160	-	-	**225120520**	-	**225120161**	-	
Vespa GS	160	-	-	**225120520**	-	**225120570**	-	
GTX SuperHexagon (Ruota 11")	180	2000	2000	**225100360**	**225100363**	**225100450**	**225100453**	Impianto Grimeca | *Grimeca Caliper*
GTX SuperHexagon (Ruota 11")	180	2000	2000	**225102620**	**225102623**	**225100450**	**225100453**	Impianto Heng Tong | *Heng Tong Caliper*
GTX SuperHexagon (Ruota 12")	180	2001	2001	**225102620**	**225102623**	**225100450**	**225100453**	Impianto Heng Tong | *Heng Tong Caliper*
LXT Hexagon	180	1999	1999	**225100360**	**225100363**	**225120421**	-	
Vespa SS	180	-	-	**225120520**	-	**225120160**	-	
Vespa SS	180	-	-	**225120520**	-	**225120161**	-	
Vespa SS	180	-	-	**225120520**	-	**225120570**	-	
X9	180	2002	2002	**225100490**	**225100493**	**225100490**	**225100493**	
Beverly	200	2002	2002	**225102620**	**225102623**	**225102620**	**225102623**	
BV	200	2002	2004	**225102620**	**225102623**	**225102620**	**225102623**	
BV	200	2005	2005	**225102620**	**225102623**	**225100360**	**225100363**	
Carnaby	200	2008	2008	**225102620**	**225102623**	**225102620**	**225102623**	
Liberty	200	2006	2006	**225100300**	**225100303**	-	-	
Vespa Cosa	200	1990	-	**225120511**	-	**225120501**	-	
Vespa GT L	200	2004	2004	**225102620**	**225102623**	**225100450**	**225100453**	
Vespa PX	200	2002	2002	**225100300**	**225100303**	-	-	
Vespa PX	200	-	-	**225120160**	-	**225120160**	-	
Vespa PX	200	-	-	**225120161**	-	**225120161**	-	
Vespa PX	200	-	-	**225120570**	-	**225120570**	-	
Vespa PX200E (Freno A Disco - *Brake disc model*)	200	1998	-	**225100160**	-	**225120160**	-	
Vespa PX200E (Freno A Disco - *Brake disc model*)	200	1998	-	**225100160**	-	**225120161**	-	
Vespa PX200E (Freno A Disco - *Brake disc model*)	200	1998	-	**225100160**	-	**225120570**	-	
Vespa PXE Arcobaleno	200	-	-	**225120160**	-	**225120160**	-	
Vespa PXE Arcobaleno	200	-	-	**225120161**	-	**225120161**	-	
Vespa PXE Arcobaleno	200	-	-	**225120570**	-	**225120570**	-	
Vespa Rally	200	-	-	**225120520**	-	**225120160**	-	
Vespa Rally	200	-	-	**225120520**	-	**225120161**	-	
Vespa Rally	200	-	-	**225120520**	-	**225120570**	-	
X8	200	2004	2004	**225102620**	**225102623**	**225100490**	**225100493**	
X8	200	2005	2005	**225102620**	**225102623**	**225100780**	-	
X9	200	2003	2003	**225100490**	**225100493**	**225100490**	**225100493**	
Ape Car P2-P3	220	1978	1985	**225120261**	-	**225120261**	-	6 pezzi | *6 pcs*
Ape TM	220	2009	2010	**225120261**	-	**225120261**	-	6 pezzi | *6 pcs*
Ape TM P602	220	1982	1983	**225120261**	-	**225120261**	-	6 pezzi | *6 pcs*
Ape TM P703-P703V-FL2	220	1984	2002	**225120261**	-	**225120261**	-	6 pezzi | *6 pcs*
Beverly	250	2007	2007	**225102620**	**225102623**	**225102620**	**225102623**	
BV	250	2006	2006	**225102620**	**225102623**	**225102620**	**225102623**	
GT Hexagon	250	1999	1999	**225100360**	**225100363**	**225120401**	-	
GTX Super Hexagon	250	2001	2001	**225100360**	**225100363**	**225100450**	**225100453**	
MP3	250	2006	2007	**225100300**	**225100303**	**225100780**	-	
MP3 Efi	250	2008	2009	**225100300**	**225100303**	**225102600**	**225102603**	
MP3 LT iE	250	2009	2009	**225100300**	**225100303**	**225102600**	**225102603**	
Vespa GT 60	250	2006	2006	**225102620**	**225102623**	**225100450**	**225100453**	
Vespa GTS ABS	250	2006	2006	**225102620**	**225102623**	**225100450**	**225100453**	
Vespa GTV	250	2008	2008	**225102620**	**225102623**	**225100450**	**225100453**	
Vespa LX 60	250	2006	2006	**225100300**	**225100303**	-	-	
X7	250	2008	2008	**225102620**	**225102623**	**225102600**	**225102603**	
X8	250	2006	2006	**225102620**	**225102623**	**225100780**	-	

Modello *Model*	**CC**	**Da** *From*	**A** *To*	RMS YOUR BEST PARTNER **Anteriore Organica** *Front Organic*	SINTER **Anteriore Sinterizzata** *Front Sintered*	RMS YOUR BEST PARTNER **Posteriore Organica** *Rear Organic*	SINTER **Posteriore Sinterizzata** *Rear Sintered*	**Note** *Notes*
X9	250	2000	2004	**225100490**	**225100493**	**225100490**	**225100493**	
X9	250	2005	2005	**225102600**	**225102603**	**225100780**	-	Pinza destra | *Right Caliper*
X9	250	2005	2005	**225102620**	**225102623**	**225100780**	-	Pinza sinistra | *Left Caliper*
Xevo	250	2008	2008	**225102620**	**225102623**	**225102600**	**225102603**	
Beverly i.e.	300	2011	2011	**225102620**	**225102623**	**225102600**	**225102603**	
Beverly Tourer	300	2007	2007	**225102620**	**225102623**	**225102620**	**225102623**	
Carnaby Cruiser	300	2010	2010	**225102620**	**225102623**	**225102620**	**225102623**	
MP3 Hybrid	300	2011	2011	**225100300**	**225100303**	**225102600**	**225102603**	
MP3 Hybrid iE	300	2011	2011	**225100300**	**225100303**	**225102600**	**225102603**	
MP3 iE	300	2010	2010	**225100300**	**225100303**	**225102600**	**225102603**	
MP3 LT	300	2013	2013	**225100300**	**225100303**	**225102600**	**225102603**	
MP3 LT Business	300	2013	2013	**225100300**	**225100303**	**225102600**	**225102603**	
MP3 LT iE ABS	300	2014	2014	**225100460**	-	**225102600**	**225102603**	
MP3 LT Sport ABS	300	2014	2014	**225100460**	-	**225102600**	**225102603**	
MP3 LT Touring	300	2011	2012	**225100300**	**225100303**	**225102600**	**225102603**	
MP3 Touring	300	2011	2012	**225100300**	**225100303**	**225102600**	**225102603**	
MP3 Yourban iE	300	2011	2011	**225100300**	**225100303**	**225102600**	**225102603**	
Vespa GTS i.e.	300	2012	2012	**225102620**	**225102623**	**225100450**	**225100453**	
Vespa GTS Super	300	2009	2009	**225102620**	**225102623**	**225100450**	**225100453**	
Vespa GTS Super Sport i.e.	300	2011	2011	**225102620**	**225102623**	**225100450**	**225100453**	
Vespa GTS Touring ABS	300	2017	2017	**225102620**	**225102623**	**225100450**	**225100453**	
Vespa GTS Touring i.e.	300	2011	2012	**225102620**	**225102623**	**225100450**	**225100453**	
Vespa GTV i.e.	300	2011	2011	**225102620**	**225102623**	**225100450**	**225100453**	
X7 Evo i.e.	300	2011	2011	**225102620**	**225102623**	**225102600**	**225102603**	
Beverly S	350	2014	2014	**225102620**	**225102623**	**225102600**	**225102603**	
Beverly Sport Touring ie	350	2012	2012	**225102670**	**225102673**	**225102600**	**225102603**	
Beverly Sport Touring ie ABS	350	2012	2012	**225102620**	**225102623**	**225102600**	**225102603**	
BV	350	2012	2012	**225102620**	**225102623**	**225102600**	**225102603**	
X10 Executive	350	2013	2013	**225102600**	**225102603**	**225102600**	**225102603**	Pinza destra | *Right Caliper*
X10 Executive	350	2013	2013	**225102620**	**225102623**	**225102600**	**225102603**	Pinza sinistra | *Left Caliper*
MP3 iE	400	2007	2010	**225100300**	**225100303**	**225102620**	**225102623**	
MP3 LT iE	400	2009	2010	**225100300**	**225100303**	**225102620**	**225102623**	
MP3 LT Touring	400	2011	2012	**225100300**	**225100303**	**225102620**	**225102623**	
MP3 Touring	400	2011	2012	**225100300**	**225100303**	**225102620**	**225102623**	
X8	400	2007	2007	**225102600**	**225102603**	**225102620**	**225102623**	Pinza destra | *Right Caliper*
X8	400	2007	2007	**225102620**	**225102623**	**225102620**	**225102623**	Pinza sinistra | *Left Caliper*
Xevo	400	2008	2008	**225102600**	**225102603**	**225102620**	**225102623**	Pinza destra | *Right Caliper*
Xevo	400	2008	2008	**225102620**	**225102623**	**225102620**	**225102623**	Pinza sinistra | *Left Caliper*
Ape Car Diesel	420	1986	1996	**225120251**	-	**225120251**	-	6 pezzi | *6 pcs*
Ape Max Diesel	420	1986	1996	**225120251**	-	**225120251**	-	6 pezzi | *6 pcs*
Ape MP601 Classic	420	2006	2007	**225120261**	-	**225120261**	-	6 pezzi | *6 pcs*
Ape TM D LCS	420	2005	2010	**225120261**	-	**225120261**	-	6 pezzi | *6 pcs*
Ape TM P703-P703V Diesel	420	1987	2001	**225120261**	-	**225120261**	-	6 pezzi | *6 pcs*
Beverly Cruiser	500	2008	2008	**225100490**	**225100493**	**225100490**	**225100493**	
BV	500	2006	2006	**225100490**	**225100493**	**225100490**	**225100493**	
MP3	500	2010	2010	**225100300**	**225100303**	**225102620**	**225102623**	
MP3 LT Touring Business	500	2011	2013	**225100300**	**225100303**	**225102620**	**225102623**	
MP3 LT Touring Business ABS	500	2014	2014	**225100460**	-	**225102620**	**225102623**	
MP3 LT Touring Sport	500	2011	2013	**225100300**	**225100303**	**225102620**	**225102623**	
MP3 LT Touring Sport ABS	500	2014	2014	**225100460**	-	**225102620**	**225102623**	
MP3 Touring Business	500	2011	2012	**225100300**	**225100303**	**225102620**	**225102623**	
MP3 Touring Sport	500	2011	2012	**225100300**	**225100303**	**225102620**	**225102623**	
QUARGO	500	2005	2015	**225103450**	-	-	-	
QUARGO	500	-	-	**225103450**	-	-	-	

Modello *Model*	**CC**	**Da** *From*	**A** *To*	RMS YOUR BEST PARTNER **Anteriore Organica** *Front Organic*	SINTER **Anteriore Sinterizzata** *Front Sintered*	RMS YOUR BEST PARTNER **Posteriore Organica** *Rear Organic*	SINTER **Posteriore Sinterizzata** *Rear Sintered*	**Note** *Notes*
X10 Executive	500	2013	2013	**225102600**	**225102603**	**225102600**	**225102603**	Pinza destra | *Right Caliper*
X10 Executive	500	2013	2013	**225102620**	**225102623**	**225102600**	**225102603**	Pinza sinistra | *Left Caliper*
X9	500	2001	2003	**225100490**	**225100493**	**225100490**	**225100493**	
X9 Evolution	500	2004	2004	**225100430**	-	**225100490**	**225100493**	
X9 Evolution ABS	500	2004	2004	**225100430**	-	**225100490**	**225100493**	
PORTER (CARBURATORE)	1000	1992	1994	**225103450**	-	-	-	
PORTER (INEIZIONE)	1000	1995	1998	**225103450**	-	-	-	
PORTER (DISEL)	1200	1995	2000	**225103450**	-	-	-	
PORTE UP DATE	1300	2009	2009	**225103450**	-	-	-	
PORTER 16V 4X4	1300	1998	2007	**225103450**	-	-	-	
PORTER 16V GPL	1300	1998	2007	**225103450**	-	-	-	
PORTER 16V MAXX	1300	1998	2007	**225103450**	-	-	-	
PORTER 16V PIC UP	1300	1998	2007	**225103450**	-	-	-	
PORTER 16V VAN	1300	1998	2007	**225103450**	-	-	-	
PORTER MAXX UP DATE	1300	2009	2009	**225103450**	-	-	-	
PORTER DISEL	1400	1995	2000	**225103450**	-	-	-	
POLARIS								
Phoenix	200	2005	2009	**225100040**	-	**225101200**	-	
Phoenix	200	2010	2010	-	-	**225101200**	-	
Sawtooth	200	2006	2006	**225100040**	-	**225100040**	-	
2x4, 4x4	250	1990	1993	-	**225103513**	-	-	
Big Boss 4x6, 6x6	250	1989	1993	-	**225103513**	-	-	
Cyclone	250	1987	1987	**225120061**	-	-	-	
Trail Blazer	250	1994	1998	-	**225103513**	-	-	
Trail Blazer	250	1999	1999	-	**225103513**	-	-	
Trail Boss	250	1991	1999	-	**225103513**	-	-	
Trail Boss 2x4, 4x4	250	1991	1992	-	**225103513**	-	-	
Xplorer 4x4	250	2000	2000	-	**225103513**	-	-	
2x4, 4x4	300	1994	1995	-	**225103513**	-	-	
Big Boss 6x6	300	1994	1994	-	**225103513**	-	-	
Xpress L	300	1996	1997	-	**225103513**	-	-	
Magnum 2x4, 4x4	325	2000	2002	-	**225103513**	-	-	
Trail Boss	325	2000	2002	-	**225103513**	-	-	
ATP	330	2004	2005	-	**225103513**	-	**225103513**	
ATP	330	2006	2006	-	**225103513**	-	-	
Magnum 2x4, 4x4	330	2003	2003	-	**225103513**	-	-	
Trail Boss	330	2003	2003	-	**225103513**	-	-	
Sportsman 4x4	335	1999	1999	-	**225103513**	-	-	
Big Boss	350	1993	1993	-	**225103513**	-	-	
L 2x4, 4x4	350	1990	1990	-	**225103513**	-	-	
L 4x4	350	1993	1993	-	**225103513**	-	-	
Trail Boss L 4x4	350	1991	1991	-	**225103513**	-	-	
Big Boss L 6x6	400	1996	1996	-	**225103513**	-	-	
L 2x4	400	1994	1995	-	**225103513**	-	-	
L 4x4	400	1994	1994	-	**225103513**	-	-	
Scrambler 2x4, 4x4	400	2000	2000	-	**225103513**	-	-	
Scrambler 4x4	400	1998	1998	-	**225103513**	-	-	
Scrambler 4x4	400	1999	1999	-	**225103513**	-	-	
Scrambler L 4x4	400	1995	1997	-	**225103513**	-	-	
Sport	400	1999	2000	-	**225103513**	-	-	
Sport L	400	1994	1998	-	**225103513**	-	-	
Sportsman	400	2001	2001	-	**225103513**	-	-	
Sportsman L 4x4	400	1994	1997	-	**225103513**	-	-	
Trail Blazer	400	2003	2003	-	**225103513**	-	-	

Modello *Model*	**CC**	**Da** *From*	**A** *To*	RMS YOUR BEST PARTNER **Anteriore Organica** *Front Organic*	SINTER **Anteriore Sinterizzata** *Front Sintered*	RMS YOUR BEST PARTNER **Posteriore Organica** *Rear Organic*	SINTER **Posteriore Sinterizzata** *Rear Sintered*	**Note** *Notes*
Xplorer L 4x4	400	1995	1999	-	**225103513**	-	-	
Xplorer L 4x4	400	2000	2000	-	**225103513**	-	-	
Xpress L	400	1996	1997	-	**225103513**	-	-	
2x4, 4x4 Magnum	425	1995	1998	-	**225103513**	-	-	
Magnum 6x6	425	1996	1996	-	**225103513**	-	-	
Xpedition 4x4	425	2000	2000	-	**225103513**	-	-	
Sportsman	450	2006	2006	-	**225103513**	-	-	
Diesel EBS 4x4	455	1999	1999	-	**225103513**	-	-	
ATP HO	500	2004	2004	-	**225103513**	-	**225103513**	
Big Boss 6x6	500	1998	1999	-	**225103513**	-	-	
Magnum 2x4, 4x4	500	2002	2002	-	**225103513**	-	-	
Magnum 4x4	500	2000	2001	-	**225103513**	-	-	
Outlaw	500	2006	2006	-	**225103513**	-	**225103513**	
Predator	500	2003	2003	-	**225103513**	-	**225103513**	
Predator e	500	2006	2006	-	**225103513**	-	-	
Ranger 6x6	500	2000	2002	-	**225103513**	-	-	
Scrambler 2x4	500	2001	2001	-	**225103513**	-	-	
Scrambler 4x4	500	1997	1997	-	**225103513**	-	-	
Scrambler 4x4	500	1998	1998	-	**225103513**	-	-	
Sportsman 4x4	500	1996	1996	-	**225103513**	-	-	
Sportsman 6x6	500	2000	2000	-	**225103513**	-	-	
Sportsman EBS 4x4	500	1998	1998	-	**225103513**	-	-	
Xplorer 4x4	500	1997	1997	-	**225103513**	-	-	
POLINI								
Cross 50	50	1999	1999	**225101400**	-	**225101400**	-	
X1 R	50	2004	2004	**225103220**	**225103223**	**225103220**	**225103223**	
X3 R	50	2004	2004	**225103220**	**225103223**	**225103220**	**225103223**	
X5 RP	65	2005	2005	**225103220**	**225103223**	**225103220**	**225103223**	
PUCH								
Storm (Austria)	50	-	-	**225100190**	**225100193**	**225120301**	-	
Typhoon (Austria)	50	1995	1995	**225100190**	**225100193**	**225120301**	-	
Typhoon (Austria)	50	1996	1996	**225103500**	-	**225120360**	-	
TZX	50	1992	1992	**225100080**	**225100083**	-	-	
Cobra	75	1985	1985	**225100080**	**225100083**	-	-	
MAXI	80	1988	1988	-	-	**225100010**	**225100013**	
Typhoon (Austria)	125	1996	1996	**225103500**	-	-	-	
QUADRO								
3	350	2016	2016	**225100280**	-	**225100040**	-	
4	350	2016	2016	**225100280**	-	**225100040**	-	
D	350	2011	2015	**225100190**	**225100193**	**225100040**	-	
RIEJU								
Drac	50	1997	1997	**225100080**	**225100083**	**225100080**	**225100083**	
Drag	50	1992	1992	**225100030**	-	-	-	
FD4 Super Marathon	50	1985	1985	**225100080**	**225100083**	-	-	
First, H2O	50	1997	1997	**225100080**	**225100083**	-	-	
MRT Pro	50	2009	2009	**225100490**	**225100493**	**225100490**	**225100493**	
MRT Pro Supermotard	50	2009	2009	**225100490**	**225100493**	**225100490**	**225100493**	
MRX ,Racing	50	2002	2002	**225100080**	**225100083**	**225100080**	**225100083**	
MRX Pro	50	2005	2005	**225100740**	-	**225100080**	**225100083**	
NKD	50	2004	2007	**225100560**	-	**225100080**	**225100083**	
Racing Spec. Edition	50	2001	2001	**225100740**	-	**225100080**	**225100083**	
RR Supermotard	50	1996	1996	**225100080**	**225100083**	**225100080**	**225100083**	
RRX	50	2008	2008	**225100080**	**225100083**	**225100080**	**225100083**	
RRX Spike	50	2008	2008	**225100080**	**225100083**	**225100080**	**225100083**	

Modello *Model*	**CC**	**Da** *From*	**A** *To*	RMS YOUR BEST PARTNER **Anteriore Organica** *Front Organic*	SINTER **Anteriore Sinterizzata** *Front Sintered*	RMS YOUR BEST PARTNER **Posteriore Organica** *Rear Organic*	SINTER **Posteriore Sinterizzata** *Rear Sintered*	**Note** *Notes*
RS1	50	1992	1992	**225100030**	-	**225100080**	**225100083**	
RS1 Castrol	50	2001	2001	**225100360**	**225100363**	**225100080**	**225100083**	
RS1 Evolution	50	1996	2000	**225100080**	**225100083**	**225100080**	**225100083**	
RS2 Matrix	50	2003	2003	**225100560**	-	**225102810**	-	
RS2 NKD	50	2006	2006	**225102820**	**225102823**	**225100040**	-	
RS3	50	2012	2012	**225100560**	-	**225100040**	-	
RS3 Pro	50	2012	2012	**225103160**	**225103163**	**225100080**	**225100083**	
RV	50	-	-	**225100080**	**225100083**	-	-	
SMX	50	2002	2002	**225100080**	**225100083**	**225100080**	**225100083**	
SMX	50	2002	2002	**225100740**	-	**225100080**	**225100083**	
SMX Pro	50	2008	2008	**225100490**	**225100493**	**225100080**	**225100083**	
Spike Racing	50	2002	2002	**225100080**	**225100083**	**225100080**	**225100083**	
Spike Racing	50	2002	2002	**225100740**	-	**225100080**	**225100083**	
Tango	50	2008	2008	**225100490**	**225100493**	**225100080**	**225100083**	
Tangoo	50	2010	2010	**225100490**	**225100493**	**225100080**	**225100083**	
Windy	50	1997	1997	**225100080**	**225100083**	-	-	
K6, LC Strada	75	1987	1987	**225100080**	**225100083**	-	-	
P6, LC Strada	75	1987	1987	**225100080**	**225100083**	-	-	
MR C, E	80	1988	1988	**225100080**	**225100083**	-	-	
MR Cross	80	1987	1987	**225100080**	**225100083**	-	-	
MR Enduro	80	1987	1987	**225100080**	**225100083**	-	-	
RST	80	1991	1991	**225100080**	**225100083**	**225100080**	**225100083**	
Marathon Pro	125	2009	2009	**225100490**	**225100493**	-	-	
Marathon Pro Supermotard	125	2009	2009	**225100490**	**225100493**	-	-	
MRX	125	2003	2003	**225100080**	**225100083**	**225100080**	**225100083**	
MRX	125	2003	2003	**225100740**	-	**225100080**	**225100083**	
RR	125	1997	1997	**225100080**	**225100083**	**225100080**	**225100083**	
RS2 NKD	125	2006	2006	**225102820**	**225102823**	**225100040**	-	
RS2 Pro	125	2008	2008	**225103260**	-	**225100040**	-	
RS3	125	2010	2010	**225103160**	**225103163**	**225100080**	**225100083**	
SMX	125	2003	2003	**225100080**	**225100083**	**225100080**	**225100083**	
SMX	125	2003	2003	**225100740**	-	**225100080**	**225100083**	
Tango	125	2006	2006	**225103160**	**225103163**	**225100080**	**225100083**	
Tango	125	2008	2008	**225100490**	**225100493**	**225100080**	**225100083**	
Tango Pro	125	2008	2008	**225100490**	**225100493**	**225100080**	**225100083**	
MRX Marathon	250	2010	2010	**225100430**	-	**225100750**	**225100753**	
Tango	250	2008	2008	**225100490**	**225100493**	**225100080**	**225100083**	
MRX Marathon	450	2008	2008	**225100430**	-	**225100750**	**225100753**	
RIZZATO								
ATALA CALIFFONE 50 (ruota raggi)	50	-	-	**225120200**	-	**225120200**	-	
ATALA UNO 50 (ruota raggi)	50	-	-	**225120190**	-	**225120190**	-	
ROYAL ENFIELD								
Continental GT	535	2014	2014	**225101010**	**225101013**	**225101330**	**225101333**	
SACHS								
MadAss	50	2004	2004	**225102590**	**225102593**	-	-	
MadAss 4T	50	2005	2005	**225102590**	**225102593**	**225101440**	-	
SW Lotus	80	-	-	**225100010**	**225100013**	-	-	
MadAss	125	2009	2009	**225102590**	**225102593**	**225101440**	-	
Roadster V2	125	2001	2001	**225100060**	**225100063**	-	-	
X-Road	125	2005	2005	**225100520**	**225100523**	-	-	
XTC	125	1999	1999	**225100520**	**225100523**	-	-	
XTC-N	125	1999	1999	**225100520**	**225100523**	-	-	
ZX	125	1999	1999	**225100060**	**225100063**	-	-	
ZZ	125	1999	1999	**225100060**	**225100063**	-	-	

Modello *Model*	**CC**	**Da** *From*	**A** *To*	RMS YOUR BEST PARTNER **Anteriore Organica** *Front Organic*	SINTER **Anteriore Sinterizzata** *Front Sintered*	RMS YOUR BEST PARTNER **Posteriore Organica** *Rear Organic*	SINTER **Posteriore Sinterizzata** *Rear Sintered*	**Note** *Notes*
MadAss	500	2005	2005	**225100520**	**225100523**	-	-	
Roadster V1.6	650	2001	2001	**225100520**	**225100523**	-	-	
B-805	800	2002	2002	**225100520**	**225100523**	-	-	
Roadster V2	800	2000	2000	**225100520**	**225100523**	-	-	
S-805	800	2003	2003	**225100520**	**225100523**	-	-	
SCORPA								
T-Ride	250	2008	-	**225103340**	-	-	-	
SHERCO								
SE Enduro	50	2007	2007	**225100360**	**225100363**	**225102810**	-	
SM Supermotard	50	2007	2007	**225100360**	**225100363**	**225102810**	-	
Supermotard, Enduro	50	2002	2006	**225100740**	-	**225100080**	**225100083**	
0,8	80	2001	2001	**225100080**	**225100083**	**225100080**	**225100083**	
ST	80	2013	2014	-	**225103543**	**225100650**	-	Impianto Formula I *Formula Caliper*
ST	80	2013	2014	-	**225103543**	-	-	Impianto Formula I *Formula Caliper*
125	125	2002	2002	**225102720**	-	**225100080**	**225100083**	
City Corp 4T Enduro	125	2003	2003	**225102720**	-	**225100080**	**225100083**	
City Corp 4T SM	125	2003	2003	**225102720**	-	**225100080**	**225100083**	
SE 1.25F	125	2010	2010	**225100360**	**225100363**	**225102810**	-	
SE-R	125	2017	2017	**225100430**	-	**225100750**	**225100753**	
ST	125	2013	2014	-	**225103543**	**225100650**	-	Impianto Formula I *Formula Caliper*
ST	125	2013	2014	-	**225103543**	-	-	Impianto Formula I *Formula Caliper*
ST 1,25	125	2001	2005	**225100080**	**225100083**	**225100080**	**225100083**	
ST 1,25	125	2006	2006	**225100640**	-	**225100650**	-	
ST 2	200	2001	2001	**225100080**	**225100083**	**225100080**	**225100083**	
SE ,R	250	2014	2014	**225100430**	-	**225100750**	**225100753**	
SE 2.5i Enduro	250	2006	2011	**225100430**	-	**225101450**	**225101453**	
SE F, F-R	250	2014	2014	**225100430**	-	**225100750**	**225100753**	
SE i/iR	250	2012	2013	**225100430**	-	**225100750**	**225100753**	
SE i-F	250	2013	2013	**225100430**	-	**225100750**	**225100753**	
ST	250	1999	2000	**225100080**	**225100083**	**225100080**	**225100083**	
ST	250	2013	2014	-	**225103543**	**225100650**	-	Impianto Formula I *Formula Caliper*
ST	250	2013	2014	-	**225103543**	-	-	Impianto Formula I *Formula Caliper*
ST 2,5	250	2001	2001	**225100640**	-	**225100650**	-	
SX 2.5i-F	250	2009	2011	**225100430**	-	**225101450**	**225101453**	
ST	290	2013	2014	-	**225103543**	**225100650**	-	Impianto Formula I *Formula Caliper*
ST	290	2013	2014	-	**225103543**	-	-	Impianto Formula I *Formula Caliper*
ST 2,9	290	2001	2001	**225100640**	-	**225100650**	-	
SCF-R	300	2016	2016	**225100430**	-	**225100750**	**225100753**	
SE ,R	300	2014	2014	**225100430**	-	**225100750**	**225100753**	
SE 3.0i-F	300	2010	2011	**225100430**	-	**225101450**	**225101453**	
SE F, F-R	300	2014	2014	**225100430**	-	**225100750**	**225100753**	
SE i/iR	300	2012	2013	**225100430**	-	**225100750**	**225100753**	
SE i-F	300	2013	2013	**225100430**	-	**225100750**	**225100753**	
ST	300	2016	2016	**225100640**	-	**225100650**	-	
ST	305	2013	2014	-	**225103543**	**225100650**	-	Impianto Formula I *Formula Caliper*
ST	305	2013	2014	-	**225103543**	-	-	Impianto Formula I *Formula Caliper*
ST 3.2F	320	2005	2005	**225100640**	-	**225100650**	-	
SE 4.5i Enduro	450	2004	2004	**225100430**	-	**225102630**	**225102633**	
SE 4.5i Enduro	450	2005	2011	**225100430**	-	**225101450**	**225101453**	
SE F, F-R	450	2014	2014	**225100430**	-	**225100750**	**225100753**	
SE iR	450	2012	2013	**225100430**	-	**225100750**	**225100753**	
SM 4.5i Supermotard	450	2006	2006	**225102860**	**225102863**	**225101450**	**225101453**	
SE 5.1i Enduro	510	2006	2011	**225100430**	-	**225101450**	**225101453**	
SE iR	510	2012	2013	**225100430**	-	**225100750**	**225100753**	

Modello *Model*	**CC**	**Da** *From*	**A** *To*	RMS YOUR BEST PARTNER **Anteriore Organica** *Front Organic*	SINTER **Anteriore Sinterizzata** *Front Sintered*	RMS YOUR BEST PARTNER **Posteriore Organica** *Rear Organic*	SINTER **Posteriore Sinterizzata** *Rear Sintered*	**Note** *Notes*
SIMSON								
Habict CX	50	2001	2001	**225100010**	**225100013**	-	-	
Spatz	50	1999	1999	**225100010**	**225100013**	-	-	
Sperber	50	1999	1999	**225100010**	**225100013**	-	-	
Star	50	1999	1999	**225100010**	**225100013**	-	-	
IFA	80	1989	1989	**225100010**	**225100013**	-	-	
SR -2 CE	80	-	-	**225100010**	**225100013**	-	-	
S CX	83	-	-	**225100010**	**225100013**	-	-	
S OR	83	-	-	**225100010**	**225100013**	-	-	
125	125	2001	2001	**225100060**	**225100063**	-	-	
RS	125	2001	2001	**225100060**	**225100063**	-	-	
Schikra	125	1999	1999	**225100060**	**225100063**	**225100010**	**225100013**	
SM	125	2001	2001	**225100740**	-	**225100080**	**225100083**	
Star	125	1999	1999	**225100080**	**225100083**	-	-	
SMC								
Easy Rider	50	1997	1997	**225102800**	-	**225120061**	-	
SUZUKI								
AE R/L	50	1988	1988	**225100040**	-	-	-	
AH Adress	50	1992	1995	**225100040**	-	-	-	
AJ Sepia	50	1992	1992	**225102800**	-	-	-	
AP	50	1995	1995	**225103210**	-	-	-	
AY , Katana	50	1996	1996	**225100080**	**225100083**	-	-	
AY , Katana	50	1996	1996	**225103210**	-	-	-	
AY W	50	2000	2000	**225100190**	**225100193**	**225100080**	**225100083**	
AY WR	50	2000	2000	**225100190**	**225100193**	**225100080**	**225100083**	
CC Tune	50	1992	1992	**225100040**	-	-	-	
CP	50	1985	1985	**225100040**	-	**225120130**	-	
CP	50	1985	1985	**225100040**	-	**225120131**	-	
CR DC	50	1987	1987	**225100040**	-	-	-	
DR Big	50	1989	1989	**225100080**	**225100083**	-	-	
GSXR	50	1987	1987	**225101200**	-	-	-	
OR E	50	1980	1980	**225101200**	-	-	-	
RB	50	1987	1987	**225101200**	-	-	-	
RG GAG	50	1987	1987	**225101200**	-	-	-	
RG Gamma	50	1990	1990	**225101200**	-	-	-	
RME	50	2010	2010	-	-	**225100660**	**225100663**	
RMX	50	2000	2000	**225100080**	**225100083**	**225100080**	**225100083**	
SMX Super Motard	50	2000	2000	**225100080**	**225100083**	**225100080**	**225100083**	
TV Wolf	50	1989	1989	**225101200**	-	-	-	
UF Estilete	50	2000	2000	**225100080**	**225100083**	**225120130**	-	
UF Estilete	50	2000	2000	**225100080**	**225100083**	**225120131**	-	
UX W Zillion	50	1999	1999	**225100080**	**225100083**	-	-	
Wolf	50	1989	1989	**225101200**	-	-	-	
ZR	50	1981	1987	**225101200**	-	-	-	
ZZ Scooter	50	1992	1992	**225100040**	-	**225120130**	-	
ZZ Scooter	50	1992	1992	**225100040**	-	**225120131**	-	
RM	65	2003	2006	-	-	**225101440**	-	
LIDO Style	75	-	-	**225100040**	-	-	-	
AH Adress, V, Tune	80	1988	1988	**225100040**	-	-	-	
AH Scooter	80	1992	1992	**225102800**	-	**225120130**	-	
AH Scooter	80	1992	1992	**225102800**	-	**225120131**	-	
GT L/C	80	1981	1981	**225101200**	-	-	-	
RG	80	1985	1985	**225103080**	**225103083**	-	-	
RG Gamma	80	1987	1987	**225101200**	-	-	-	

Modello *Model*	**CC**	**Da** *From*	**A** *To*	RMS YOUR BEST PARTNER **Anteriore Organica** *Front Organic*	SINTER **Anteriore Sinterizzata** *Front Sintered*	RMS YOUR BEST PARTNER **Posteriore Organica** *Rear Organic*	SINTER **Posteriore Sinterizzata** *Rear Sintered*	**Note** *Notes*
RG Gamma	80	1988	1993	**225103080**	**225103083**	-	-	
RM	80	1986	1989	**225102800**	-	-	-	
RM	80	1990	1995	**225102800**	-	**225100040**	-	
RM	80	1996	2001	-	-	**225100040**	-	
ZZ Sepia	80	1990	1990	**225100040**	-	-	-	
RM ,L	85	2002	2004	-	-	**225100040**	-	
AH V Adress	100	1991	1994	**225100040**	-	-	-	
RM	100	2003	2003	-	-	**225102850**	**225102853**	
UK Adress	110	2015	2015	**225100040**	-	-	-	
TRS	118	1982	1983	**225101200**	-	-	-	
AN	125	2006	2008	**225100040**	-	-	-	
DR	125	1986	2002	**225101440**	-	-	-	
DR SM	125	2008	2008	**225100920**	**225100923**	**225102630**	**225102633**	
EN	125	2005	2005	**225101420**	**225101423**	-	-	
GN	125	1991	2004	**225101200**	-	-	-	
GS ESZ	125	1982	1982	**225101200**	-	-	-	
GT	125	1980	1980	**225101200**	-	-	-	
GX R	125	1988	1988	**225101440**	-	-	-	
LIDO Vario Scooter	125	1990	1990	**225100040**	-	-	-	
RG F, Gamma	125	1992	1996	**225101150**	**225101153**	-	-	
RG Gamma	125	1985	1990	**225103080**	**225103083**	-	-	
RG Wolf	125	1992	1994	-	-	**225100720**	**225100723**	
RH X	125	1987	1987	**225101440**	-	-	-	
RM	125	1987	1987	**225101420**	**225101423**	-	-	
RM	125	1988	1988	**225101420**	**225101423**	**225102850**	**225102853**	
RM	125	1989	1990	**225101420**	**225101423**	**225101790**	-	
RM	125	1991	1995	**225101420**	**225101423**	**225101790**	-	
RM	125	1996	2009	**225100920**	**225100923**	**225102630**	**225102633**	
RV VanVan	125	2003	2003	**225101250**	**225101253**	-	-	
SP	125	1986	1988	**225101440**	-	-	-	
SX	125	1985	1985	**225101440**	-	-	-	
TR	125	1983	1983	**225101200**	-	-	-	
TS	125	1985	1989	**225101440**	-	-	-	
TS	125	1989	1996	**225101420**	**225101423**	**225101790**	-	
TU XT	125	1999	1999	**225101200**	-	-	-	
UE	125	2001	2001	**225100040**	-	-	-	
UH Burgman	125	2002	2006	**225100430**	-	**225100490**	**225100493**	
UH Burgman	125	2007	2016	**225102540**	**225102543**	**225102870**	**225102873**	
UX SIXteen	125	2008	2008	**225102540**	**225102543**	**225102870**	**225102873**	
X4 , X3E	125	-	-	**225101200**	-	-	-	
UE CT	150	2002	2002	**225100040**	-	-	-	
UH Burgman	150	2004	2006	**225100430**	-	**225100490**	**225100493**	
UX SIXteen	150	2008	2008	**225102540**	**225102543**	**225102870**	**225102873**	
DR	200	1986	1988	**225101440**	-	-	-	
DR S	200	2015	2015	**225101440**	-	-	-	
DR SE	200	1996	2013	**225101440**	-	-	-	
DR T	200	1996	1996	**225101440**	-	-	-	
RG Gamma	200	1991	1991	**225101150**	**225101153**	-	-	
RV VanVan	200	2016	2016	**225101250**	**225101253**	-	-	
SP	200	1986	1988	**225101440**	-	-	-	
SX R	200	1985	1985	**225101440**	-	-	-	
TS R	200	1990	1994	**225101420**	**225101423**	**225101790**	-	
UH	200	2007	2007	**225102540**	**225102543**	-	-	
UH Burgman	200	2007	2013	**225102540**	**225102543**	**225102870**	**225102873**	

Modello *Model*	**CC**	**Da** *From*	**A** *To*	RMS YOUR BEST PARTNER **Anteriore Organica** *Front Organic*	SINTER **Anteriore Sinterizzata** *Front Sintered*	RMS YOUR BEST PARTNER **Posteriore Organica** *Rear Organic*	SINTER **Posteriore Sinterizzata** *Rear Sintered*	**Note** *Notes*
UH Burgman	200	2014	2014	**225101070**	**225101073**	**225102870**	**225102873**	
LT	230	1985	1988	-	-	**225102850**	**225102853**	
LT	230	1986	1993	-	-	**225102850**	**225102853**	
ET	240	1986	1986	**225101200**	-	-	-	
RH X	240	1987	1987	**225101440**	-	-	-	
TS X	240	1985	1985	**225101440**	-	-	-	
Across	250	1990	1990	-	-	**225100720**	**225100723**	
AN Burgman	250	1998	2003	**225100380**	**225100383**	**225100270**	**225100273**	
AN Burgman	250	2004	2006	**225100380**	**225100383**	**225100670**	-	
Bandit	250	1990	1996	-	-	**225100720**	**225100723**	
Cobra	250	1990	1990	**225101150**	**225101153**	**225100720**	**225100723**	
Djebel	250	1993	1993	-	-	**225101790**	-	
DL V-Strom	250	2017	2017	**225100870**	**225100873**	**225100930**	**225100933**	
DR	250	1985	1989	**225101440**	-	-	-	
DR	250	1990	1995	**225101420**	**225101423**	**225101790**	-	
DR-Z	250	2001	2001	**225100920**	**225100923**	**225101790**	-	
GF	250	1988	1988	-	-	**225100720**	**225100723**	
GSF VS, S Bandit	250	1995	1995	**225101240**	**225101243**	-	-	
GSX S, Katana	250	1991	1991	-	-	**225100720**	**225100723**	
GSX-R	250	1988	1989	-	-	**225100720**	**225100723**	
GSX-R	250	2017	2017	**225100870**	**225100873**	**225100930**	**225100933**	
GSX-R R	250	1989	1989	**225101150**	**225101153**	**225100720**	**225100723**	
GW Inazuma	250	2012	2012	**225100870**	**225100873**	**225100930**	**225100933**	
GW Inazuma F	250	2015	2015	**225100870**	**225100873**	**225100930**	**225100933**	
Impulse	250	1995	1995	**225100870**	**225100873**	-	-	
LT-F Ozark	250	2003	2003	**225101440**	-	-	-	
LT-Z Quad Sport	250	2004	2004	**225101440**	-	-	-	
NZ	250	1986	1986	**225101200**	-	-	-	
RG	250	1983	1984	**225100720**	**225100723**	**225100720**	**225100723**	
RG Gamma	250	1984	1988	-	-	**225100720**	**225100723**	
RGV	250	1988	1988	**225103030**	**225103033**	**225100720**	**225100723**	
RGV	250	1989	1990	**225101150**	**225101153**	**225100720**	**225100723**	
RGV	250	1993	1995	**225101150**	**225101153**	-	-	
RGV Gamma	250	1991	1992	**225101150**	**225101153**	-	-	
RH	250	1985	1985	**225101440**	-	-	-	
RM-Z	250	2004	2006	**225100920**	**225100923**	**225101450**	**225101453**	
RM-Z	250	2007	2009	**225100920**	**225100923**	**225101450**	**225101453**	
RM-Z Efi	250	2010	2010	**225100920**	**225100923**	**225101450**	**225101453**	
Sky Wave Type II	250	1998	1998	**225100380**	**225100383**	**225100270**	**225100273**	
SP	250	1985	1985	**225101440**	-	-	-	
TS X	250	1985	1989	**225101440**	-	-	-	
TU X	250	2009	2009	**225101240**	**225101243**	-	-	
TV	250	1988	1988	**225101150**	**225101153**	**225100720**	**225100723**	
Wolf	250	1990	1990	**225101150**	**225101153**	**225100720**	**225100723**	
LT-F King Quad	300	2002	2002	**225101070**	**225101073**	-	-	Pinza destra | *Right Caliper*
LT-F King Quad	300	2002	2002	**225101420**	**225101423**	-	-	Pinza sinistra | *Left Caliper*
DR	350	1990	1999	**225101420**	**225101423**	**225101790**	-	
DR V, W, X	350	1997	1997	**225100920**	**225100923**	**225101790**	-	
AN Burgman	400	1999	2000	**225100380**	**225100383**	**225100270**	**225100273**	
AN Burgman	400	2001	2006	**225100380**	**225100383**	**225100670**	-	
AN Burgman	400	2007	2016	**225101070**	**225101073**	**225101500**	**225101503**	Pinza destra | *Right Caliper*
AN Burgman	400	2007	2016	**225101420**	**225101423**	**225101500**	**225101503**	Pinza sinistra | *Left Caliper*
AN Burgman	400	2017	2017	**225101070**	**225101073**	**225101500**	**225101503**	Pinza destra | *Right Caliper*
AN Burgman	400	2017	2017	**225101420**	**225101423**	**225101500**	**225101503**	Pinza sinistra | *Left Caliper*

Modello *Model*	**CC**	**Da** *From*	**A** *To*	RMS YOUR BEST PARTNER **Anteriore Organica** *Front Organic*	SINTER **Anteriore Sinterizzata** *Front Sintered*	RMS YOUR BEST PARTNER **Posteriore Organica** *Rear Organic*	SINTER **Posteriore Sinterizzata** *Rear Sintered*	**Note** *Notes*
DR-Z S /E	400	2000	2000	**225100920**	**225100923**	**225102630**	**225102633**	
DR-Z SM	400	2005	2010	**225100920**	**225100923**	**225102630**	**225102633**	
GSF Bandit	400	1991	1992	-	-	**225100720**	**225100723**	
GSF Bandit	400	1993	1997	**225101150**	**225101153**	**225100720**	**225100723**	
GSX EFX	400	1982	1982	**225101200**	-	-	-	
GSX F	400	1989	1989	-	-	**225100720**	**225100723**	
GSX FD	400	1983	1983	**225101200**	-	-	-	
GSX FWS	400	1983	1983	**225100720**	**225100723**	**225100720**	**225100723**	
GSX FX, FZ	400	1981	1982	**225101200**	-	-	-	
GSX Impulse	400	1994	1996	**225100870**	**225100873**	**225100720**	**225100723**	
GSX S, Katana	400	1983	1983	**225101200**	-	-	-	
GSX S, Katana	400	1992	1992	**225101150**	**225101153**	**225100720**	**225100723**	
GSX X	400	1986	1986	-	-	**225100720**	**225100723**	
GSX-R	400	1987	1987	-	-	**225100720**	**225100723**	
GSX-R	400	1988	1989	**225101150**	**225101153**	**225100720**	**225100723**	
GSX-R F	400	1985	1986	-	-	**225100720**	**225100723**	
GSX-R R	400	1990	1995	**225103030**	**225103033**	**225100720**	**225100723**	
KLT-A King Quad	400	2008	2008	**225102880**	**225102883**	-	-	Pinza sinistra | *Left Caliper*
KLT-A King Quad	400	2008	2008	**225102900**	**225102903**	-	-	Pinza destra | *Right Caliper*
KLT-F King Quad	400	2008	2008	**225102880**	**225102883**	-	-	Pinza sinistra | *Left Caliper*
KLT-F King Quad	400	2008	2008	**225102900**	**225102903**	-	-	Pinza destra | *Right Caliper*
LT-A Eiger 2WD/4WD	400	2002	2007	**225101440**	-	-	-	
LT-A King Quad	400	2008	2008	**225102880**	**225102883**	-	-	Pinza sinistra | *Left Caliper*
LT-A King Quad	400	2008	2008	**225102900**	**225102903**	-	-	Pinza destra | *Right Caliper*
LT-F Eiger 2WD/4WD	400	2002	2002	**225101440**	-	-	-	
LT-F King Quad	400	2008	2008	**225102880**	**225102883**	-	-	Pinza sinistra | *Left Caliper*
LT-F King Quad	400	2008	2008	**225102900**	**225102903**	-	-	Pinza destra | *Right Caliper*
LT-Z Quad Sport	400	2002	2002	**225102850**	**225102853**	**225100500**	-	
RF RVC	400	1993	1997	**225100870**	**225100873**	**225100720**	**225100723**	
GS	450	1986	1986	**225101200**	-	-	-	
LT-A King Quad	450	2008	2008	**225102880**	**225102883**	-	-	Pinza sinistra | *Left Caliper*
LT-A King Quad	450	2008	2008	**225102900**	**225102903**	-	-	Pinza destra | *Right Caliper*
LT-R	450	2006	2006	**225101070**	**225101073**	**225100500**	-	Pinza destra | *Right Caliper*
LT-R	450	2006	2006	**225101420**	**225101423**	**225100500**	-	Pinza sinistra | *Left Caliper*
RMX Z Efi	450	2010	2010	**225100920**	**225100923**	**225101450**	**225101453**	
RMX Z Efi	450	2017	2017	**225100920**	**225100923**	**225101450**	**225101453**	
RM-Z	450	2005	2007	**225100920**	**225100923**	**225101450**	**225101453**	
RM-Z Efi	450	2008	2008	**225100920**	**225100923**	**225101450**	**225101453**	
GS	500	1989	1995	-	-	**225100720**	**225100723**	
GS	500	1996	2003	**225101250**	**225101253**	**225100720**	**225100723**	
GS	500	2004	2004	**225101250**	**225101253**	**225100720**	**225100723**	
GS F	500	2004	2004	**225101250**	**225101253**	**225100720**	**225100723**	
GSX	500	1983	1983	**225100720**	**225100723**	**225100720**	**225100723**	
LT	500	1987	1995	-	-	**225100500**	-	
LT-A F Vinson	500	2002	2002	**225101440**	-	-	-	
LT-A FY Quadmaster	500	2000	2000	**225101070**	**225101073**	-	-	Pinza destra | *Right Caliper*
LT-A FY Quadmaster	500	2000	2000	**225101420**	**225101423**	-	-	Pinza sinistra | *Left Caliper*
LT-A King Quad	500	2011	2011	**225102880**	**225102883**	-	-	Pinza sinistra | *Left Caliper*
LT-A King Quad	500	2011	2011	**225102900**	**225102903**	-	-	Pinza destra | *Right Caliper*
LT-F F	500	1998	1998	**225101070**	**225101073**	-	-	Pinza sinistra | *Left Caliper*
LT-F F	500	1998	1998	**225101420**	**225101423**	-	-	Pinza destra | *Right Caliper*
RG	500	1985	1987	-	-	**225100720**	**225100723**	
RG Gamma	500	1985	1985	-	-	**225100720**	**225100723**	
RM	500	1987	1987	**225101420**	**225101423**	**225102850**	**225102853**	

Modello *Model*	**CC**	**Da** *From*	**A** *To*	**Anteriore Organica** *Front Organic*	**Anteriore Sinterizzata** *Front Sintered*	**Posteriore Organica** *Rear Organic*	**Posteriore Sinterizzata** *Rear Sintered*	**Note** *Notes*
GS	550	1983	1983	**225100720**	**225100723**	**225100720**	**225100723**	
GSX	550	1983	1987	**225100720**	**225100723**	**225100720**	**225100723**	
GSF Bandit	600	1995	1999	**225100870**	**225100873**	**225100720**	**225100723**	
GSF Bandit / S Bandit	600	2000	2004	**225101250**	**225101253**	-	-	Pinza destra | *Right Caliper*
GSF Bandit / S Bandit	600	-	-	-	-	-	-	
GSR	600	2006	2010	**225101150**	**225101153**	**225103060**	**225103063**	
GSX FW	600	1998	1998	**225101240**	**225101243**	**225100720**	**225100723**	Pinza sinistra | *Left Caliper*
GSX FW	600	1998	1998	**225101250**	**225101253**	**225100720**	**225100723**	Pinza destra | *Right Caliper*
GSX Katana	600	1988	1989	-	-	**225100720**	**225100723**	
GSX Katana	600	1990	1997	-	-	**225100720**	**225100723**	
GSX-R	600	1992	1993	**225103030**	**225103033**	**225100720**	**225100723**	
GSX-R	600	1997	2000	**225101150**	**225101153**	**225100720**	**225100723**	
GSX-R	600	2001	2003	**225101150**	**225101153**	**225100720**	**225100723**	
GSX-R	600	2004	2005	**225102960**	**225102963**	**225103110**	**225103113**	Pinza radiale | *Radial Caliper*
GSX-R	600	2006	2010	**225102960**	**225102963**	**225103060**	**225103063**	Pinza radiale | *Radial Caliper*
GSX-R	600	2011	2011	-	**225102923**	**225102930**	**225102933**	Pinza radiale | *Radial Caliper*
RF R	600	1993	1996	**225100870**	**225100873**	**225100720**	**225100723**	
AN A Burgman Executive	650	2004	2012	**225100870**	**225100873**	**225101500**	**225101503**	
AN Burgman	650	2002	2002	**225100870**	**225100873**	**225101500**	**225101503**	
AN Z Burgman Executive	650	2013	2013	**225100870**	**225100873**	**225101500**	**225101503**	
DL V-Strom	650	2004	2013	**225101240**	**225101243**	**225100930**	**225100933**	Pinza sinistra | *Left Caliper*
DL V-Strom	650	2004	2013	**225101250**	**225101253**	**225100930**	**225100933**	Pinza destra | *Right Caliper*
DL V-Strom	650	2017	2017	**225101240**	**225101243**	**225100930**	**225100933**	Pinza sinistra | *Left Caliper*
DL V-Strom	650	2017	2017	**225101250**	**225101253**	**225100930**	**225100933**	Pinza destra | *Right Caliper*
DL V-Strom XT	650	2015	2016	**225101240**	**225101243**	**225100930**	**225100933**	Pinza sinistra | *Left Caliper*
DL V-Strom XT	650	2015	2016	**225101250**	**225101253**	**225100930**	**225100933**	Pinza destra | *Right Caliper*
DL V-Strom XT	650	2017	2017	**225101240**	**225101243**	**225100930**	**225100933**	Pinza sinistra | *Left Caliper*
DL V-Strom XT	650	2017	2017	**225101250**	**225101253**	**225100930**	**225100933**	Pinza destra | *Right Caliper*
DR SE T-W	650	1996	1996	**225100920**	**225100923**	**225101790**	-	
GSF Bandit	650	2007	2007	**225101150**	**225101153**	**225100930**	**225100933**	
GSF Bandit / S Bandit	650	2005	2005	**225101240**	**225101243**	**225103110**	**225103113**	Pinza sinistra | *Left Caliper*
GSF Bandit / S Bandit	650	2005	2005	**225101250**	**225101253**	**225103110**	**225103113**	Pinza destra | *Right Caliper*
GSF Bandit / S Bandit ABS	650	2006	2006	**225101240**	**225101243**	**225100930**	**225100933**	Pinza sinistra | *Left Caliper*
GSF Bandit / S Bandit ABS	650	2006	2006	**225101250**	**225101253**	**225100930**	**225100933**	Pinza destra | *Right Caliper*
GSF Bandit ABS	650	2007	2012	**225101150**	**225101153**	**225100930**	**225100933**	
GSF S Bandit	650	2007	2007	**225101150**	**225101153**	**225100930**	**225100933**	
GSF S Bandit ABS	650	2007	2013	**225101150**	**225101153**	**225100930**	**225100933**	
GSX F	650	2008	2013	**225101150**	**225101153**	**225100930**	**225100933**	
SFV Gladius	650	2009	2009	**225101240**	**225101243**	**225103520**	**225103323**	Pinza sinistra | *Left Caliper*
SFV Gladius	650	2009	2009	**225101250**	**225101253**	**225103520**	**225103323**	Pinza destra | *Right Caliper*
SV	650	2016	2016	**225101240**	**225101243**	**225103520**	**225103323**	Pinza sinistra | *Left Caliper*
SV	650	2016	2016	**225101250**	**225101253**	**225103520**	**225103323**	Pinza destra | *Right Caliper*
SV ,S	650	1999	2002	**225101240**	**225101243**	**225100720**	**225100723**	Pinza sinistra | *Left Caliper*
SV ,S	650	1999	2002	**225101250**	**225101253**	**225100720**	**225100723**	Pinza destra | *Right Caliper*
SV ,S	650	2003	2012	**225101240**	**225101243**	**225100930**	**225100933**	Pinza sinistra | *Left Caliper*
SV ,S	650	2003	2012	**225101250**	**225101253**	**225100930**	**225100933**	Pinza destra | *Right Caliper*
XF Freewind	650	1997	2002	**225101250**	**225101253**	**225102610**	**225102613**	
LT-A King Quad	700	2005	2005	**225102880**	**225102883**	-	-	Pinza sinistra | *Left Caliper*
LT-A King Quad	700	2005	2005	**225102900**	**225102903**	-	-	Pinza destra | *Right Caliper*
GS Katana	750	1985	1985	**225100720**	**225100723**	**225100720**	**225100723**	
GS RF	750	1985	1985	-	-	**225100720**	**225100723**	
GSR	750	2011	2011	**225101240**	**225101243**	**225100930**	**225100933**	Pinza sinistra | *Left Caliper*
GSR	750	2011	2011	**225101250**	**225101253**	**225100930**	**225100933**	Pinza destra | *Right Caliper*
GSX	750	1998	2008	**225101240**	**225101243**	**225100720**	**225100723**	Pinza sinistra | *Left Caliper*

Modello *Model*	**CC**	**Da** *From*	**A** *To*	RMS YOUR BEST PARTNER **Anteriore Organica** *Front Organic*	SINTER **Anteriore Sinterizzata** *Front Sintered*	RMS YOUR BEST PARTNER **Posteriore Organica** *Rear Organic*	SINTER **Posteriore Sinterizzata** *Rear Sintered*	**Note** *Notes*
GSX	750	1998	2008	**225101250**	**225101253**	**225100720**	**225100723**	Pinza destra | *Right Caliper*
GSX ES	750	1984	1985	**225100720**	**225100723**	**225100720**	**225100723**	
GSX FW	750	1998	2002	**225101240**	**225101243**	**225100720**	**225100723**	Pinza sinistra | *Left Caliper*
GSX FW	750	1998	2002	**225101250**	**225101253**	**225100720**	**225100723**	Pinza destra | *Right Caliper*
GSX-R	750	1985	1987	-	-	**225100720**	**225100723**	
GSX-R	750	1988	1993	**225103030**	**225103033**	**225100720**	**225100723**	
GSX-R	750	1994	1999	**225101170**	**225101173**	**225100720**	**225100723**	
GSX-R	750	2004	2005	**225102960**	**225102963**	**225103110**	**225103113**	Pinza radiale | *Radial Caliper*
GSX-R	750	2006	2010	**225102960**	**225102963**	**225103060**	**225103063**	Pinza radiale | *Radial Caliper*
GSX-R	750	2011	2011	-	**225102923**	**225102930**	**225102933**	Pinza radiale | *Radial Caliper*
GSX-R Y	750	2000	2003	**225101150**	**225101153**	**225100720**	**225100723**	
GSX-S	750	2015	2016	**225101240**	**225101243**	**225100930**	**225100933**	Pinza sinistra | *Left Caliper*
GSX-S	750	2015	2016	**225101250**	**225101253**	**225100930**	**225100933**	Pinza destra | *Right Caliper*
GSX-S	750	2017	2017	-	**225102993**	**225100930**	**225100933**	
GSX-S Z	750	2015	2016	**225101240**	**225101243**	**225100930**	**225100933**	Pinza sinistra | *Left Caliper*
GSX-S Z	750	2015	2016	**225101250**	**225101253**	**225100930**	**225100933**	Pinza destra | *Right Caliper*
LT-A King Quad	750	2008	2008	**225102880**	**225102883**	-	-	Pinza sinistra | *Left Caliper*
LT-A King Quad	750	2008	2008	**225102900**	**225102903**	-	-	Pinza destra | *Right Caliper*
C Intruder	800	2005	2005	**225101250**	**225101253**	-	-	
DR S, Big	800	1991	1995	-	-	**225101070**	**225101073**	
DR ST Big	800	1996	1996	**225101240**	**225101243**	**225101070**	**225101073**	
DR-Z	800	1988	1990	-	-	**225102850**	**225102853**	
M Intruder	800	2005	2005	**225101250**	**225101253**	-	-	
VL Intruder LC Volusia	800	2001	2004	**225101250**	**225101253**	-	-	
VZ Marauder	800	1997	2004	**225101250**	**225101253**	-	-	
RF RR,RS,RS2,T,V	900	1994	1997	**225103030**	**225103033**	-	-	
DL V-Strom	1000	2002	2013	**225101240**	**225101243**	**225100930**	**225100933**	Pinza sinistra | *Left Caliper*
DL V-Strom	1000	2002	2013	**225101250**	**225101253**	**225100930**	**225100933**	Pinza destra | *Right Caliper*
DL V-Strom	1000	2014	2016	**225102960**	**225102963**	**225103060**	**225103063**	
DL V-Strom	1000	2017	2017	**225102960**	**225102963**	**225103060**	**225103063**	
DL V-Strom XT	1000	2017	2017	**225102960**	**225102963**	**225103060**	**225103063**	
GSX-R	1000	2001	2002	**225101170**	**225101173**	**225103110**	**225103113**	
GSX-R	1000	2003	2003	-	**225102983**	**225103110**	**225103113**	Pinza radiale | *Radial Caliper*
GSX-R	1000	2004	2006	**225102960**	**225102963**	**225103110**	**225103113**	Pinza radiale | *Radial Caliper*
GSX-R	1000	2007	2008	**225102960**	**225102963**	**225103060**	**225103063**	Pinza radiale | *Radial Caliper*
GSX-R	1000	2009	2011	**225102960**	**225102963**	**225102930**	**225102933**	Pinza radiale | *Radial Caliper*
GSX-R	1000	2012	2016	-	**225102923**	**225102930**	**225102933**	Pinza radiale | *Radial Caliper*
GSX-R	1000	2017	2017	-	**225102923**	**225102930**	**225102933**	Pinza radiale | *Radial Caliper*
GSX-R R	1000	2017	2017	-	**225102923**	**225102930**	**225102933**	Pinza radiale | *Radial Caliper*
GSX-S	1000	2015	2015	-	**225102923**	**225100930**	**225100933**	
GSX-S F	1000	2015	2015	-	**225102923**	**225100930**	**225100933**	
SV ,S	1000	2003	2007	**225101150**	**225101153**	**225100930**	**225100933**	
TL RW	1000	1998	2002	**225101170**	**225101173**	**225100720**	**225100723**	
TL S V-Twin	1000	1997	2001	**225101150**	**225101153**	**225100720**	**225100723**	
GSX	1100	1986	1986	**225100720**	**225100723**	**225100720**	**225100723**	
GSX F	1100	1993	1996	-	-	**225100720**	**225100723**	
GSX G	1100	1996	1996	**225101240**	**225101243**	**225100720**	**225100723**	Pinza sinistra | *Left Caliper*
GSX G	1100	1996	1996	**225101250**	**225101253**	**225100720**	**225100723**	Pinza destra | *Right Caliper*
GSX Katana	1100	1993	1993	**225103030**	**225103033**	**225100720**	**225100723**	
GSX-R	1100	1989	1992	**225103030**	**225103033**	**225100720**	**225100723**	
GSX-R	1100	1993	1997	**225101170**	**225101173**	**225100720**	**225100723**	
GSF Bandit	1200	1995	1996	**225103030**	**225103033**	**225100720**	**225100723**	
GSF Bandit	1200	1997	2000	**225103030**	**225103033**	**225100720**	**225100723**	
GSF Bandit	1200	2001	2005	**225101170**	**225101173**	**225100720**	**225100723**	

Modello *Model*	**CC**	**Da** *From*	**A** *To*	RMS YOUR BEST PARTNER **Anteriore Organica** *Front Organic*	SINTER **Anteriore Sinterizzata** *Front Sintered*	RMS YOUR BEST PARTNER **Posteriore Organica** *Rear Organic*	SINTER **Posteriore Sinterizzata** *Rear Sintered*	**Note** *Notes*
GSF Bandit	1200	2006	2006	**225101150**	**225101153**	**225100930**	**225100933**	
GSF S Bandit	1200	2001	2005	**225101170**	**225101173**	**225100720**	**225100723**	
GSF S Bandit	1200	2006	2006	**225101150**	**225101153**	**225100930**	**225100933**	
GSX	1200	1999	2001	**225101100**	**225101103**	**225100720**	**225100723**	
GSF A Bandit	1250	2007	2007	**225101150**	**225101153**	**225100930**	**225100933**	
GSF Bandit	1250	2006	2006	**225101150**	**225101153**	**225100930**	**225100933**	
GSF F Bandit	1250	2012	2012	**225101150**	**225101153**	**225100930**	**225100933**	
GSF S Bandit	1250	2006	2006	**225101150**	**225101153**	**225100930**	**225100933**	
GSF SA Bandit	1250	2007	2007	**225101150**	**225101153**	**225100930**	**225100933**	
GSX FA Bandit	1250	2016	2016	**225101150**	**225101153**	**225100930**	**225100933**	
GSX FA Traveller	1250	2015	2015	**225101150**	**225101153**	**225100930**	**225100933**	
B-King	1300	2007	2007	-	**225102943**	**225100930**	**225100933**	
GSX-R Hayabusa	1300	1999	2007	**225101170**	**225101173**	**225100720**	**225100723**	
GSX-R Hayabusa	1300	2008	2012	**225102960**	**225102963**	**225103060**	**225103063**	
GSX-R Hayabusa	1300	2013	2013	-	**225102923**	**225103060**	**225103063**	Pinza radiale | *Radial Caliper*
B-King	1340	2008	2008	-	**225102993**	**225103060**	**225103063**	
GSX	1400	2002	2007	**225101170**	**225101173**	**225103110**	**225103113**	
C Intruder	1500	2005	2010	**225101240**	**225101243**	**225101150**	**225101153**	Pinza sinistra | *Left Caliper*
C Intruder	1500	2005	2010	**225101250**	**225101253**	**225101150**	**225101153**	Pinza destra | *Right Caliper*
C T Intruder	1500	2013	2013	**225100870**	**225100873**	**225101250**	**225101253**	
M Intruder	1500	2009	2009	**225101240**	**225101243**	**225101250**	**225101253**	Pinza sinistra | *Left Caliper*
M Intruder	1500	2009	2009	**225101250**	**225101253**	**225101250**	**225101253**	Pinza destra | *Right Caliper*
VL Intruder LC	1500	2002	2002	**225101240**	**225101243**	**225101150**	**225101153**	Pinza sinistra | *Left Caliper*
VL Intruder LC	1500	2002	2002	**225101250**	**225101253**	**225101150**	**225101153**	Pinza destra | *Right Caliper*
M Intruder	1600	2005	2005	-	**225102983**	**225101250**	**225101253**	
VZ Marauder	1600	2004	2004	**225101170**	**225101173**	**225101250**	**225101253**	
C R Intruder	1800	2008	2008	**225102540**	**225102543**	**225101250**	**225101253**	
M R Intruder	1800	2006	2006	**225102960**	**225102963**	**225101250**	**225101253**	
M R2 Intruder	1800	2008	2008	**225102960**	**225102963**	**225101250**	**225101253**	
M RBZ Intruder	1800	2016	2016	**225102960**	**225102963**	**225101250**	**225101253**	
SWM								
GP	125	1986	1986	**225100010**	**225100013**	**225100010**	**225100013**	
S1-S2	125	-	-	**225100010**	**225100013**	-	-	
Explorer	250	1986	1986	**225100010**	**225100013**	**225100010**	**225100013**	
Pioner	250	1986	1986	**225100010**	**225100013**	**225100010**	**225100013**	
S1-S2	250	-	-	**225100010**	**225100013**	-	-	
RS R	300	2015	2015	**225100430**	-	**225100750**	**225100753**	
TRL MJ	329	1986	1986	**225100010**	**225100013**	-	-	
XP Sahara	350	-	-	**225103150**	**225103153**	-	-	
Gran Milano	440	2015	2015	**225100870**	**225100873**	-	-	
Gran Turismo	440	2015	2015	**225100870**	**225100873**	-	-	
Silver Vase	440	2015	2015	**225100870**	**225100873**	-	-	
SM R	450	2015	2015	**225102860**	**225102863**	**225100750**	**225100753**	
RS R	500	2015	2015	**225100430**	-	**225100750**	**225100753**	
Superdual	650	2015	2015	**225102860**	**225102863**	**225101330**	**225101333**	
SYM								
Allo	50	2011	2011	**225102750**	**225102753**	-	-	
Bullet	50	1993	1993	**225103440**	-	-	-	
Cinderella	50	2001	2001	**225103440**	-	**225120090**	-	
Cinderella	50	2001	2001	**225103440**	-	**225120091**	-	
Crox	50	2014	2014	**225102750**	**225102753**	-	-	
DD	50	2002	2002	**225103440**	-	-	-	
Feel-big	50	1998	1998	**225103440**	-	-	-	
Fiddle	50	2009	2009	**225102750**	**225102753**	-	-	

Modello *Model*	**CC**	**Da** *From*	**A** *To*	RMS YOUR BEST PARTNER **Anteriore Organica** *Front Organic*	SINTER **Anteriore Sinterizzata** *Front Sintered*	RMS YOUR BEST PARTNER **Posteriore Organica** *Rear Organic*	SINTER **Posteriore Sinterizzata** *Rear Sintered*	**Note** *Notes*
Fiddle III	50	2016	2016	**225102750**	**225102753**	-	-	
Jet 4 Naked	50	2011	2011	**225102750**	**225102753**	-	-	
Jet 4 R	50	2011	2011	**225102750**	**225102753**	-	-	
Jet BasiX	50	2007	2007	**225102750**	**225102753**	-	-	
Jet Euro X	50	2005	2005	**225102750**	**225102753**	-	-	
Jet Sport X	50	2006	2006	**225102750**	**225102753**	-	-	
Jet Sport X SR	50	2006	2006	**225102750**	**225102753**	-	-	
Jet, Alpha	50	1995	1995	**225102750**	**225102753**	-	-	
Jungle	50	1996	1996	**225102750**	**225102753**	**225120090**	-	
Jungle	50	1996	1996	**225102750**	**225102753**	**225120091**	-	
Mask	50	2000	2000	**225102750**	**225102753**	**225120090**	-	
Mask	50	2000	2000	**225102750**	**225102753**	**225120091**	-	
Mask LC	50	2000	2000	**225102750**	**225102753**	**225120090**	-	
Mask LC	50	2000	2000	**225102750**	**225102753**	**225120091**	-	
Mio	50	2005	2005	**225103440**	-	-	-	
Orbit II	50	2012	2012	**225102750**	**225102753**	-	-	
Pure	50	1998	1998	**225103440**	-	-	-	
Red Devil	50	1997	1997	**225102750**	**225102753**	-	-	
RS	50	2005	2005	**225103260**	-	-	-	
RS21	50	2002	2002	**225103260**	-	-	-	
Super Fancy	50	1995	1997	**225102750**	**225102753**	**225120090**	-	
Super Fancy	50	1995	1997	**225102750**	**225102753**	**225120091**	-	
Super Fancy	50	1998	1998	**225103240**	-	**225120090**	-	
Super Fancy	50	1998	1998	**225103240**	-	**225120091**	-	
Symphony	50	2009	2009	**225102750**	**225102753**	-	-	
Symphony SR	50	2011	2011	**225102750**	**225102753**	-	-	
Symphony ST	50	2015	2015	**225102750**	**225102753**	-	-	
Symply	50	2008	2008	**225102750**	**225102753**	-	-	
X'Pro	50	2014	2014	**225102750**	**225102753**	-	-	
Cinderella	100	2001	2001	**225103440**	-	**225120090**	-	
Cinderella	100	2001	2001	**225103440**	-	**225120091**	-	
Jet	100	2000	2000	**225102750**	**225102753**	-	-	
Jet Euro X	100	2005	2005	**225102750**	**225102753**	-	-	
Jet Sport X	100	2005	2005	**225102750**	**225102753**	-	-	
Mio	100	2005	2005	**225103440**	-	-	-	
Party	100	1997	1997	**225102750**	**225102753**	-	-	
Super Fancy	100	1995	1995	**225102750**	**225102753**	**225120090**	-	
Super Fancy	100	1995	1995	**225102750**	**225102753**	**225120091**	-	
Bullet	110	1993	1993	**225103580**	**225103583**	-	-	
Bullet	110	1993	1993	**225100330***	-	-	-	* = Pastiglia non omologata | * = *Not homologated brake pad*
Star	110	2003	2003	**225102750**	**225102753**	-	-	
Aero Wolf	125	-	-	**225103580**	**225103583**	-	-	
Aero Wolf	125	-	-	**225100330***	-	-	-	* = Pastiglia non omologata | * = *Not homologated brake pad*
Allo	125	2011	2011	**225102750**	**225102753**	-	-	
Attila	125	1995	1995	**225102750**	**225102753**	-	-	
Citycom	125	2009	2009	**225102750**	**225102753**	-	-	
Crox	125	2014	2014	**225102750**	**225102753**	-	-	
Euro MX	125	2003	2003	**225103260**	-	-	-	
Fiddle	125	2009	2009	**225102750**	**225102753**	-	-	
Fiddle III	125	2016	2016	**225102750**	**225102753**	-	-	
GTS	125	2007	2007	**225100380**	**225100383**	-	-	
HD	125	2004	2004	**225102710**	-	-	-	

Modello *Model*	**CC**	**Da** *From*	**A** *To*	RMS YOUR BEST PARTNER **Anteriore Organica** *Front Organic*	SINTER **Anteriore Sinterizzata** *Front Sintered*	RMS YOUR BEST PARTNER **Posteriore Organica** *Rear Organic*	SINTER **Posteriore Sinterizzata** *Rear Sintered*	**Note** *Notes*
HD Evo DT	125	2010	2010	**225102750**	**225102753**	**225103230**	-	
HD2 Evo	125	2014	2014	**225102750**	**225102753**	**225103230**	-	
Husky	125	1996	1998	**225101200**	-	-	-	
Jet 14	125	2017	2017	**225102750**	**225102753**	**225100300**	**225100303**	
Jet 4	125	2011	2011	**225102750**	**225102753**	-	-	
Joymax Sport	125	2016	2016	**225100380**	**225100383**	**225103230**	-	
Joyride	125	2001	2006	**225103260**	-	**225102710**	-	
Joyride	125	2007	2009	**225103260**	-	**225103230**	-	
Joyride Evo	125	2010	2010	**225103260**	-	**225103230**	-	
Joyride S	125	2016	2016	**225103260**	-	**225103230**	-	
Megalo	125	2002	2002	**225102750**	**225102753**	-	-	
New Duke	125	2002	2007	**225102750**	**225102753**	-	-	
RS	125	2005	2005	**225103260**	-	**225100350**	**225100353**	
RS21 ,R	125	2002	2002	**225103260**	-	-	-	
SB Wolf Ni	125	2011	2011	**225103230**	-	**225103070**	**225103073**	
Super Duke	125	1995	2001	**225102750**	**225102753**	**225120090**	-	
Super Duke	125	1995	2001	**225102750**	**225102753**	**225120091**	-	
Symphony	125	2009	2009	**225102750**	**225102753**	-	-	
Symphony EX	125	2017	2017	**225102750**	**225102753**	-	-	
Symphony S	125	2011	2011	**225102750**	**225102753**	**225100300**	**225100303**	
Symphony SR	125	2011	2011	**225102750**	**225102753**	**225100300**	**225100303**	
Symphony ST	125	2015	2015	**225102750**	**225102753**	**225100300**	**225100303**	
Symply	125	2008	2008	**225102750**	**225102753**	-	-	
Voyager	125	2005	2005	**225100500**	-	-	-	
VS	125	2007	2007	**225103260**	-	-	-	
VS	125	2009	2009	**225103260**	-	-	-	
Wolf Classic	125	2005	2005	**225102590**	**225102593**	-	-	
Wolf Legend	125	2002	2002	**225102590**	**225102593**	-	-	
X'Pro	125	2014	2014	**225102750**	**225102753**	-	-	
Attila	150	2000	2000	**225102750**	**225102753**	-	-	
Crox	150	2014	2014	**225102750**	**225102753**	-	-	
Euro MX	150	2003	2003	**225103260**	-	-	-	
H01	150	1995	1995	**225102750**	**225102753**	-	-	
Jet 4	150	2011	2011	**225102750**	**225102753**	-	-	
Joyride	150	2001	2001	**225103260**	-	**225102710**	-	
RS	150	2005	2005	**225103260**	-	**225100350**	**225100353**	
Super Duke	150	1996	2001	**225102750**	**225102753**	-	-	
Symphony S	150	2011	2011	**225102750**	**225102753**	**225100300**	**225100303**	
Symphony SR	150	2011	2011	**225102750**	**225102753**	**225100300**	**225100303**	
VS	150	2007	2007	**225103260**	-	-	-	
MF	180	2003	2003	**225102590**	**225102593**	-	-	
Fiddle II	200	2011	2011	**225102750**	**225102753**	-	-	
Fiddle III	200	2016	2016	**225102750**	**225102753**	**225100300**	**225100303**	
HD	200	2004	2004	**225102710**	-	-	-	
HD Evo	200	2007	2007	**225102750**	**225102753**	**225103230**	-	
HD2 Evo	200	2014	2014	**225102750**	**225102753**	**225103230**	-	
Joyride	200	2001	2001	**225103260**	-	**225102710**	-	
Joyride Evo	200	2009	2009	**225102750**	**225102753**	-	-	
Joyride S	200	2016	2016	**225103260**	-	**225103230**	-	
Quadlander	200	2012	2012	**225103070**	**225103073**	**225103230**	-	
Trackrunner	200	2005	2008	**225103070**	**225103073**	**225103230**	-	
GTS	250	2007	2007	**225100380**	**225100383**	**225103230**	-	
Joymax	250	2007	2007	**225100500**	-	**225103230**	-	
Joymax Sport	250	2016	2016	**225100380**	**225100383**	**225103230**	-	

Modello *Model*	**CC**	**Da** *From*	**A** *To*	RMS YOUR BEST PARTNER **Anteriore Organica** *Front Organic*	SINTER **Anteriore Sinterizzata** *Front Sintered*	RMS YOUR BEST PARTNER **Posteriore Organica** *Rear Organic*	SINTER **Posteriore Sinterizzata** *Rear Sintered*	**Note** *Notes*
Quadlander	250	2006	2007	**225103070**	**225103073**	**225103230**	-	
RV Efi	250	2010	2010	**225100380**	**225100383**	**225103230**	-	
SN Ni Wolf	250	2014	2014	**225103470**	**225103473**	**225103070**	**225103073**	
SN T2 Wolf	250	2012	2012	**225103470**	**225103473**	-	-	
Voyager	250	2005	2005	**225100500**	-	-	-	
City Max	300	2006	2007	**225103070**	**225103073**	**225103230**	-	
Citycom	300	2009	2009	**225102750**	**225102753**	**225102750**	**225102753**	
Citycom S	300	2015	2015	**225102750**	**225102753**	**225102750**	**225102753**	
Cruisym	300	2017	2017	**225103470**	**225103473**	**225103230**	-	
GTS	300	2009	2009	**225100380**	**225100383**	**225103230**	-	
GTS Evo i	300	2011	2011	**225100380**	**225100383**	**225103230**	-	
Joymax Evo	300	2010	2010	**225100380**	**225100383**	**225103230**	-	
Joymax Sport	300	2016	2016	**225100380**	**225100383**	**225103230**	-	
Joyride Evo i	300	2010	2010	**225100380**	**225100383**	**225103230**	-	
Quadlander	300	2006	2006	**225103070**	**225103073**	**225103070**	**225103073**	
SB Cafe Racer	300	2016	2016	**225103470**	**225103473**	**225103070**	**225103073**	
Wolf Cafe Racer	300	2015	2015	**225103470**	**225103473**	**225103070**	**225103073**	
Wolf Classic	300	2015	2015	**225103470**	**225103473**	**225103070**	**225103073**	
i Maxsym	400	2011	2011	**225102830**	**225102833**	**225103590**	-	
i Maxsym	400	2012	2012	**225103470**	**225103473**	**225103590**	-	
GT	500	2007	2007	**225100380**	**225100383**	**225102710**	-	
i Maxsym	600	2014	2014	**225103470**	**225103473**	**225103590**	-	
Quad Raider	600	2008	2008	**225103070**	**225103073**	**225103070**	**225103073**	
TGB								
203	50	2005	2005	**225100580**	**225100583**	-	-	
101R	50	2005	2009	**225100040**	-	-	-	
101S	50	1999	1999	**225100040**	-	-	-	
202T	50	1999	1999	**225100040**	-	-	-	
303R	50	1999	1999	**225100040**	-	-	-	
Akros	50	1999	1999	**225100040**	-	-	-	
Akros tec 5	50	1999	2004	**225100580**	**225100583**	-	-	
Apollo	50	1999	1999	**225100580**	**225100583**	-	-	
Bull&t RS/RR	50	2011	2011	-	-	**225100040**	-	
Bullet	50	2009	2009	**225100040**	-	**225100040**	-	
Bunny	50	1997	1997	**225100040**	-	-	-	
Corona	50	2003	2003	**225100030**	-	-	-	
Ergon	50	1996	1996	**225100040**	-	-	-	
Fire, Sky	50	2003	2003	**225100580**	**225100583**	-	-	
Hawk	50	2009	2009	**225100040**	-	-	-	
Hiw's	50	1999	1999	**225100040**	-	-	-	
Hook	50	2010	2010	**225100040**	-	-	-	
R X	50	2006	2006	**225100030**	-	**225100040**	-	
Tapo RS	50	2011	2011	**225100040**	-	-	-	
Trigger	50	1999	2003	**225100040**	-	-	-	
101S	90	1999	1999	**225100040**	-	-	-	
202T	90	1999	1999	**225100040**	-	-	-	
Akros	90	1999	1999	**225100040**	-	-	-	
Apollo	90	1999	1999	**225100580**	**225100583**	-	-	
Ergon	90	1999	1999	**225100040**	-	-	-	
Hiw's	90	1999	1999	**225100040**	-	-	-	
Trigger	90	1999	1999	**225100040**	-	-	-	
101S	125	1999	1999	**225100040**	-	-	-	
202T	125	1999	1999	**225100040**	-	-	-	
303R	125	1999	1999	**225100040**	-	-	-	

Modello *Model*	**CC**	**Da** *From*	**A** *To*	RMS YOUR BEST PARTNER **Anteriore Organica** *Front Organic*	SINTER **Anteriore Sinterizzata** *Front Sintered*	RMS YOUR BEST PARTNER **Posteriore Organica** *Rear Organic*	SINTER **Posteriore Sinterizzata** *Rear Sintered*	**Note** *Notes*
Bull&t RS/RR	125	2011	2011	-	-	**225100040**	-	
Hook	125	2010	2010	**225100040**	-	-	-	
X-Large	125	2011	2011	-	-	**225103230**	-	
X-Motion	125	2008	2008	-	-	**225103230**	-	
Dynasty	250	2006	2006	**225100580**	**225100583**	**225100180**	-	
X-Motion	250	2008	2008	-	-	**225103230**	-	
X-Motion	300	2010	2010	-	-	**225103230**	-	
TM								
Cross	80	1996	2000	**225100430**	-	**225101330**	**225101333**	
Junior	80	1996	2000	**225100040**	-	**225102850**	**225102853**	
85	85	2001	2012	**225100430**	-	**225102630**	**225102633**	
85	85	2013	2013	**225100660**	**225100663**	**225100660**	**225100663**	
125	125	1996	2000	**225100430**	-	**225101330**	**225101333**	
125	125	2001	2004	**225100430**	-	**225102630**	**225102633**	
125	125	2005	2005	**225100430**	-	**225101450**	**225101453**	
Enduro	125	2001	2004	**225100430**	-	**225102630**	**225102633**	
Enduro	125	2005	2005	**225100430**	-	**225101450**	**225101453**	
SMR	125	2005	2005	**225100520**	**225100523**	**225102630**	**225102633**	
250	250	2001	2004	**225100430**	-	**225102630**	**225102633**	
250	250	2005	2005	**225100430**	-	**225101450**	**225101453**	
E	250	1995	2000	**225100430**	-	**225101330**	**225101333**	
Enduro	250	2001	2004	**225100430**	-	**225102630**	**225102633**	
Enduro	250	2005	2005	**225100430**	-	**225101450**	**225101453**	
F	250	2001	2004	**225100430**	-	**225102630**	**225102633**	
F	250	2005	2005	**225100430**	-	**225101450**	**225101453**	
F Enduro	250	2000	2000	**225100430**	-	**225101330**	**225101333**	
F Enduro	250	2001	2004	**225100430**	-	**225102630**	**225102633**	
F Enduro	250	2005	2005	**225100430**	-	**225101450**	**225101453**	
300	300	1998	2000	**225100430**	-	**225101330**	**225101333**	
300	300	2001	2004	**225100430**	-	**225102630**	**225102633**	
300	300	2005	2005	**225100430**	-	**225101450**	**225101453**	
Enduro	300	2001	2004	**225100430**	-	**225102630**	**225102633**	
Enduro	300	2005	2005	**225100430**	-	**225101450**	**225101453**	
320	320	1996	1997	**225100430**	-	**225101330**	**225101333**	
F	400	2000	2000	**225100430**	-	**225101330**	**225101333**	
F	400	2001	2001	**225100430**	-	**225102630**	**225102633**	
F Enduro	400	2001	2001	**225100430**	-	**225102630**	**225102633**	
SMF F	400	2002	2002	**225100520**	**225100523**	**225102630**	**225102633**	
SMR F	400	2003	2003	**225100520**	**225100523**	**225102630**	**225102633**	
F	450	2002	2004	**225100430**	-	**225102630**	**225102633**	
F	450	2005	2005	**225100430**	-	**225101450**	**225101453**	
F Enduro	450	2002	2004	**225100430**	-	**225102630**	**225102633**	
F Enduro	450	2005	2005	**225100430**	-	**225101450**	**225101453**	
FT Fi	450	2017	2017	**225100430**	-	**225101450**	**225101453**	
SMR F	450	2004	2004	**225100520**	**225100523**	**225102630**	**225102633**	
SMX F	450	2003	2003	**225100520**	**225100523**	**225102630**	**225102633**	
SMX F	450	2004	2004	**225102860**	**225102863**	**225102630**	**225102633**	
F	530	2001	2004	**225100430**	-	**225102630**	**225102633**	
F	530	2005	2005	**225100430**	-	**225101450**	**225101453**	
F Enduro	530	2001	2004	**225100430**	-	**225102630**	**225102633**	
F Enduro	530	2005	2005	**225100430**	-	**225101450**	**225101453**	
SMR F	530	2003	2003	**225100520**	**225100523**	**225102630**	**225102633**	
SMX F	600	2003	2003	**225100520**	**225100523**	**225102630**	**225102633**	
SMX F	660	2004	2004	**225102860**	**225102863**	**225102630**	**225102633**	

Modello *Model*	**CC**	**Da** *From*	**A** *To*	**Anteriore Organica** *Front Organic*	**Anteriore Sinterizzata** *Front Sintered*	**Posteriore Organica** *Rear Organic*	**Posteriore Sinterizzata** *Rear Sintered*	**Note** *Notes*
TRIUMPH								
Daytona	600	2003	2004	**225103030**	**225103033**	**225102610**	**225102613**	
Speed Four	600	2003	2006	**225103030**	**225103033**	**225102610**	**225102613**	
TT	600	2000	2003	**225103030**	**225103033**	**225102610**	**225102613**	
Daytona	650	2005	2006	**225103030**	**225103033**	**225102610**	**225102613**	
Daytona	675	2006	2008	-	**225102993**	**225102610**	**225102613**	Pinza radiale | *Radial Caliper*
Daytona R Triple	675	2011	2012	-	**225102923**	**225102610**	**225102613**	Pinza radiale | *Radial Caliper*
Daytona R Triple	675	2013	2013	-	**225102923**	**225101330**	**225101333**	Pinza radiale | *Radial Caliper*
Daytona Triple	675	2009	2012	-	-	**225102610**	**225102613**	Pinza radiale | *Radial Caliper*
Daytona Triple	675	2013	2013	-	-	**225101330**	**225101333**	Pinza radiale | *Radial Caliper*
Street Triple	675	2008	2012	**225100870**	**225100873**	**225102610**	**225102613**	
Street Triple	675	2013	2013	**225100870**	**225100873**	**225101330**	**225101333**	
Street Triple R	675	2009	2012	-	**225102993**	**225102610**	**225102613**	
Street Triple R	675	2013	2013	-	**225102993**	**225101330**	**225101333**	
Street Triple RX	675	2015	2015	-	**225102993**	**225101330**	**225101333**	
Bonneville U.K.	750	1987	1987	**225103150**	**225103153**	**225103150**	**225103153**	
Daytona	750	1991	1992	**225103030**	**225103033**	**225101070**	**225101073**	
Trident	750	1991	1991	**225101070**	**225101073**	**225101420**	**225101423**	Pinza destra | *Right Caliper*
Trident	750	1991	1991	**225101420**	**225101423**	**225101420**	**225101423**	Pinza sinistra | *Left Caliper*
America	800	2003	2006	**225100870**	**225100873**	**225101420**	**225101423**	
Bonneville	800	2001	2004	**225100870**	**225100873**	**225101420**	**225101423**	
Bonneville America	800	2002	2002	**225100870**	**225100873**	**225101420**	**225101423**	
Bonneville T100 Centennial Edition	800	2002	2004	**225100870**	**225100873**	**225101420**	**225101423**	
Bonneville T100 Paul Smith	800	2006	2008	**225100870**	**225100873**	**225101420**	**225101423**	
Speedmaster	800	2003	2004	**225100870**	**225100873**	**225101420**	**225101423**	
Tiger	800	2011	2014	**225100870**	**225100873**	**225102610**	**225102613**	
Tiger XC	800	2011	2011	**225100870**	**225100873**	**225102610**	**225102613**	
Tiger XC ABS	800	2012	2014	**225100870**	**225100873**	**225102610**	**225102613**	
Tiger XCA	800	2015	2015	**225100870**	**225100873**	**225102610**	**225102613**	
Tiger XCR	800	2015	2015	**225100870**	**225100873**	**225102610**	**225102613**	
Tiger XR	800	2015	2015	**225100870**	**225100873**	**225102610**	**225102613**	
Tiger XRT	800	2015	2015	**225100870**	**225100873**	**225102610**	**225102613**	
Tiger XRX	800	2015	2015	**225100870**	**225100873**	**225102610**	**225102613**	
Adventurer	900	1996	1996	**225100870**	**225100873**	**225102640**	**225102643**	
America	900	2007	2007	**225100870**	**225100873**	**225101420**	**225101423**	
Bonneville	900	2005	2008	**225100870**	**225100873**	**225101070**	**225101073**	
Bonneville	900	2009	2009	**225100870**	**225100873**	**225101420**	**225101423**	
Bonneville Newchurch	900	2015	2015	**225100870**	**225100873**	**225101420**	**225101423**	
Bonneville SE	900	2009	2013	**225100870**	**225100873**	**225101420**	**225101423**	
Bonneville Spirit	900	2015	2015	**225100870**	**225100873**	**225101420**	**225101423**	
Bonneville Street Cup	900	2017	2017	**225100870**	**225100873**	**225101420**	**225101423**	
Bonneville T100	900	2005	2008	**225100870**	**225100873**	**225101420**	**225101423**	
Bonneville T100	900	2009	2016	**225100870**	**225100873**	**225101420**	**225101423**	
Bonneville T100	900	2017	2017	**225100870**	**225100873**	**225101420**	**225101423**	
Bonneville T100 Black	900	2017	2017	**225100870**	**225100873**	**225101420**	**225101423**	
Bonneville T214	900	2015	2015	**225100870**	**225100873**	**225101420**	**225101423**	
Daytona	900	1991	1994	**225103030**	**225103033**	**225101070**	**225101073**	
Daytona Super III	900	1994	1994	-	-	**225101070**	**225101073**	
Daytona, Sprint	900	1993	1993	**225101070**	**225101073**	**225101420**	**225101423**	Pinza destra | *Right Caliper*
Daytona, Sprint	900	1993	1993	**225101420**	**225101423**	**225101420**	**225101423**	Pinza sinistra | *Left Caliper*
Daytona, Sprint	900	1994	1994	**225103030**	**225103033**	**225101070**	**225101073**	
Legend TT	900	1999	1999	**225100870**	**225100873**	**225102640**	**225102643**	
Scrambler	900	2006	2016	**225100870**	**225100873**	**225101420**	**225101423**	
Speed Triple	900	1994	1996	**225103030**	**225103033**	**225101070**	**225101073**	

Modello *Model*	**CC**	**Da** *From*	**A** *To*	RMS YOUR BEST PARTNER **Anteriore Organica** *Front Organic*	SINTER **Anteriore Sinterizzata** *Front Sintered*	RMS YOUR BEST PARTNER **Posteriore Organica** *Rear Organic*	SINTER **Posteriore Sinterizzata** *Rear Sintered*	**Note** *Notes*
Speedmaster	900	2005	2005	**225100870**	**225100873**	**225101420**	**225101423**	
Street Scrambler	900	2017	2017	**225100870**	**225100873**	**225101420**	**225101423**	
Street Twin	900	2016	2016	**225100870**	**225100873**	**225101420**	**225101423**	
T509 Speed Triple	900	1997	2001	**225103030**	**225103033**	**225101420**	**225101423**	
Thruxton	900	2004	2004	**225100870**	**225100873**	**225101420**	**225101423**	
Thruxton Ace	900	2015	2015	**225100870**	**225100873**	**225101420**	**225101423**	
Thunderbird	900	1996	1996	**225100870**	**225100873**	**225102640**	**225102643**	
Thunderbird Sport	900	2003	2003	**225100870**	**225100873**	**225102640**	**225102643**	
Tiger	900	1993	1998	**225101070**	**225101073**	**225101420**	**225101423**	Pinza destra | *Right Caliper*
Tiger	900	1993	1998	**225101420**	**225101423**	**225101420**	**225101423**	Pinza sinistra | *Left Caliper*
Tiger	900	1999	2000	**225100870**	**225100873**	**225102640**	**225102643**	
Trident	900	1991	1991	**225101070**	**225101073**	**225101420**	**225101423**	Pinza destra | *Right Caliper*
Trident	900	1991	1991	**225101420**	**225101423**	**225101420**	**225101423**	Pinza sinistra | *Left Caliper*
Trophy	900	1991	1995	**225101070**	**225101073**	**225101420**	**225101423**	Pinza destra | *Right Caliper*
Trophy	900	1991	1995	**225101420**	**225101423**	**225101420**	**225101423**	Pinza sinistra | *Left Caliper*
Trophy	900	1996	1996	**225103030**	**225103033**	**225101070**	**225101073**	
T595 Daytona	950	1996	1998	**225103030**	**225103033**	**225101420**	**225101423**	
Daytona Centennial	955	2002	2002	**225103030**	**225103033**	**225101420**	**225101423**	
Daytona from VIN 132513	955	1999	1999	**225103030**	**225103033**	**225102610**	**225102613**	
Daytona to VIN 132512	955	1999	1999	**225103030**	**225103033**	**225101420**	**225101423**	
Speed Triple	955	1999	1999	**225103030**	**225103033**	**225101420**	**225101423**	
Sprint RS	955	2000	2000	**225103030**	**225103033**	**225101420**	**225101423**	
Sprint ST	955	1999	2004	**225103030**	**225103033**	**225101420**	**225101423**	
Tiger	955	2001	2004	**225100870**	**225100873**	**225100870**	**225100873**	
Tiger	955	2004	2006	**225100870**	**225100873**	**225101070**	**225101073**	
Daytona	1000	1992	1992	**225103030**	**225103033**	**225101070**	**225101073**	
Trophy	1000	1991	1995	**225101070**	**225101073**	**225101420**	**225101423**	Pinza destra | *Right Caliper*
Trophy	1000	1991	1995	**225101420**	**225101423**	**225101420**	**225101423**	Pinza sinistra | *Left Caliper*
Speed 94	1050	2015	2015	**225102860**	**225102863**	**225101420**	**225101423**	
Speed 94R	1050	2015	2015	-	**225102923**	**225101420**	**225101423**	
Speed Triple	1050	2005	2007	-	**225102993**	**225101420**	**225101423**	Pinza radiale | *Radial Caliper*
Speed Triple	1050	2008	2015	**225102860**	**225102863**	**225101420**	**225101423**	Pinza radiale | *Radial Caliper*
Speed Triple	1050	2016	2016	-	**225102923**	**225101420**	**225101423**	
Speed Triple R	1050	2012	2015	-	**225102923**	**225101420**	**225101423**	
Speed Triple R	1050	2016	2016	-	**225102923**	**225101420**	**225101423**	
Speed Triple S	1050	2016	2016	-	**225102923**	**225101420**	**225101423**	
Sprint GT ABS	1050	2011	2011	**225103030**	**225103033**	**225101420**	**225101423**	
Sprint ST	1050	2005	2011	**225103030**	**225103033**	**225101420**	**225101423**	
Tiger	1050	2007	2007	-	**225102993**	**225101070**	**225101073**	
Tiger SE	1050	2009	2009	-	**225102993**	**225101070**	**225101073**	Pinza radiale | *Radial Caliper*
Tiger Sport	1050	2015	2015	-	**225102993**	**225101420**	**225101423**	
Bonneville Bobber	1200	2017	2017	**225100870**	**225100873**	**225101420**	**225101423**	
Bonneville T120	1200	2016	2016	**225100870**	**225100873**	**225101420**	**225101423**	
Bonneville T120 Black	1200	2016	2016	**225100870**	**225100873**	**225101420**	**225101423**	
Daytona	1200	1991	1991	**225103030**	**225103033**	**225101070**	**225101073**	
Thruxton	1200	2016	2016	**225100870**	**225100873**	**225101420**	**225101423**	
Thruxton R	1200	2016	2016	-	**225102923**	**225101420**	**225101423**	
Tiger Explorer	1200	2012	2012	**225103030**	**225103033**	**225101420**	**225101423**	
Trophy	1200	1991	1995	**225101070**	**225101073**	**225101420**	**225101423**	Pinza destra | *Right Caliper*
Trophy	1200	1991	1995	**225101420**	**225101423**	**225101420**	**225101423**	Pinza sinistra | *Left Caliper*
Trophy	1200	1996	2003	**225103030**	**225103033**	**225101070**	**225101073**	
Trophy SE	1200	2013	2013	**225100380**	**225100383**	**225101420**	**225101423**	
Thunderbird	1600	2009	2009	**225103030**	**225103033**	**225101010**	**225101013**	
Thunderbird Commander	1700	2014	2014	**225103030**	**225103033**	**225101010**	**225101013**	

Modello *Model*	**CC**	**Da** *From*	**A** *To*	RMS YOUR BEST PARTNER **Anteriore Organica** *Front Organic*	SINTER **Anteriore Sinterizzata** *Front Sintered*	RMS YOUR BEST PARTNER **Posteriore Organica** *Rear Organic*	SINTER **Posteriore Sinterizzata** *Rear Sintered*	**Note** *Notes*
Thunderbird LT	1700	2014	2014	**225103030**	**225103033**	**225101010**	**225101013**	
Thunderbird Storm	1700	2011	2011	**225103030**	**225103033**	**225101010**	**225101013**	
Rocket III	2300	2004	2004	**225103030**	**225103033**	**225101010**	**225101013**	
Rocket III Classic	2300	2007	2007	**225103030**	**225103033**	**225101010**	**225101013**	
Rocket III Roadster	2300	2010	2010	**225103030**	**225103033**	**225101010**	**225101013**	
Rocket III Touring	2300	2013	2013	**225103030**	**225103033**	**225101010**	**225101013**	
Rocket X	2300	2015	2015	**225103030**	**225103033**	**225101010**	**225101013**	
VICTORY								
Octane	1200	2017	2017	**225101010**	**225101013**	**225101330**	**225101333**	
Kingpin	1500	2004	2005	**225101100**	**225101103**	**225101010**	**225101013**	
Touring Cruiser	1500	2003	2006	**225101100**	**225101103**	**225101010**	**225101013**	
V92C Cruiser	1500	1998	2002	**225101100**	**225101103**	**225101010**	**225101013**	
V92C Deluxe	1500	2001	2002	**225101100**	**225101103**	**225101010**	**225101013**	
V92SC Sport Cruiser	1500	2000	2002	**225101100**	**225101103**	**225101010**	**225101013**	
Vegas	1500	2003	2005	**225101100**	**225101103**	**225101010**	**225101013**	
Vegas 8-Ball	1500	2005	2005	**225101100**	**225101103**	**225101010**	**225101013**	
Hammer	1634	2005	2007	**225101100**	**225101103**	**225101010**	**225101013**	
Hammer	1634	2008	2008	-	**225102993**	**225102640**	**225102643**	
Hammer S	1634	2006	2008	**225101100**	**225101103**	**225101010**	**225101013**	
Kingpin	1634	2006	2007	**225101100**	**225101103**	**225101010**	**225101013**	
Kingpin Tour	1634	2006	2007	**225101100**	**225101103**	**225101010**	**225101013**	
Vegas	1634	2006	2007	**225101100**	**225101103**	**225101010**	**225101013**	
Vegas	1634	2008	2008	-	**225102993**	**225102640**	**225102643**	
Vegas 8-Ball	1634	2006	2007	**225101100**	**225101103**	**225101010**	**225101013**	
Vegas 8-Ball	1634	2008	2008	-	**225102993**	**225102640**	**225102643**	
Vegas Jackpot	1634	2006	2007	**225101100**	**225101103**	**225101010**	**225101013**	
Vegas Jackpot	1634	2008	2008	-	**225102993**	**225102640**	**225102643**	
Boardwalk	1731	2013	2013	-	**225102993**	**225102640**	**225102643**	
Cross Country	1731	2010	2010	-	**225102993**	**225102640**	**225102643**	
Cross Country 8-Ball	1731	2014	2014	-	**225102993**	**225102640**	**225102643**	
Cross Country Tour	1731	2012	2012	-	**225102993**	**225102640**	**225102643**	
Cross Roads	1731	2010	2010	-	**225102993**	-	-	
Cross Roads 8-Ball	1731	2014	2014	-	**225102993**	-	-	
Cross Roads Classic	1731	2014	2014	-	**225102993**	-	-	
Gunner	1731	2015	2015	-	**225102993**	-	-	
Hammer	1731	2009	2009	-	**225102993**	-	-	
Hammer 8-Ball	1731	2010	2010	-	**225102993**	-	-	
Hammer S	1731	2009	2009	-	**225102993**	-	-	
Hard-Ball	1731	2012	2012	-	**225102993**	-	-	
High-Ball	1731	2012	2012	-	**225102993**	-	-	
Jackpot	1731	2010	2010	-	**225102993**	-	-	
Judge	1731	2013	2013	-	**225102993**	-	-	
Kingpin	1731	2010	2010	-	**225102993**	-	-	
Kingpin 8-Ball	1731	2010	2010	-	**225102993**	-	-	
Magnum	1731	2015	2015	-	**225102993**	-	-	
Magnum X-1	1731	2015	2015	-	**225102993**	-	-	
Vegas	1731	2010	2010	-	**225102993**	-	-	
Vegas 8-Ball	1731	2010	2010	-	**225102993**	-	-	
Vegas Jackpot	1731	2009	2009	-	**225102993**	-	-	
YAMAHA								
Axis Pro Foot	50	1992	1992	**225100180**	-	**225120090**	-	
Axis Pro Foot	50	1992	1992	**225100180**	-	**225120091**	-	
Beluga	50	1990	1990	**225120051**	-	**225120051**	-	
BW	50	1991	1994	**225120051**	-	**225120051**	-	

Modello *Model*	**CC**	**Da** *From*	**A** *To*	**Anteriore Organica** *Front Organic*	**Anteriore Sinterizzata** *Front Sintered*	**Posteriore Organica** *Rear Organic*	**Posteriore Sinterizzata** *Rear Sintered*	**Note** *Notes*
BW	50	2006	-	-	-	**225120480**	-	
BW Bump	50	1997	1997	**225100190**	**225100193**	**225120051**	-	
BW Next Generation	50	1996	2007	**225100190**	**225100193**	**225120051**	-	
BW Sports Spec R	50	2002	2002	**225100190**	**225100193**	-	-	
BW Spy	50	1995	1995	**225100190**	**225100193**	**225120051**	-	
CR Target	50	1991	1991	**225100180**	-	**225120061**	-	
CR Z	50	1991	1995	**225100180**	-	**225120051**	-	
CW TA Zuma	50	1990	1990	**225120051**	-	**225120051**	-	
CX	50	1988	1988	**225120061**	-	**225120061**	-	
CY F Jog	50	1994	1994	-	-	**225120061**	-	
Cygnus	50	1996	1996	**225102730**	-	-	-	
DT LCD	50	1998	1998	-	-	**225120061**	-	
DT MX	50	1987	1990	**225120051**	-	**225120051**	-	
DT R	50	1989	1995	**225102730**	-	**225120051**	-	
DT R	50	1996	1997	**225102730**	-	**225120051**	-	
DT R	50	1998	2003	**225100070**	-	**225120061**	-	
DT R	50	2004	2004	**225100080**	**225100083**	**225102810**	-	
DT X Supermotard	50	2004	2004	**225100360**	**225100363**	**225102810**	-	
FZR	50	1990	1990	**225101070**	**225101073**	-	-	
FZR	50	1992	1992	**225101420**	**225101423**	**225101790**	-	
JOG (Italia)	50	1993	-	-	-	**225120090**	-	
JOG (Italia)	50	1993	-	-	-	**225120091**	-	
JOG (Spain)	50	1988	1988	**225100180**	-	-	-	
JOG CY	50	1990	1992	-	-	**225120051**	-	
JOG R	50	-	-	**225100180**	-	**225120051**	-	
Jog R/RR	50	2002	2014	**225100190**	**225100193**	-	-	
JOG Z	50	1993	-	-	-	**225120090**	-	
JOG Z	50	1993	-	-	-	**225120091**	-	
JOG-Z	50	1988	1989	**225100180**	-	-	-	
JOG-Z	50	1990	1990	**225103210**	-	-	-	
Neo's 4	50	2009	2009	**225100190**	**225100193**	**225120480**	-	
NS Aerox	50	2013	2013	**225103210**	-	**225100280**	-	
RS Champ	50	1988	1988	**225100180**	-	-	-	
Slider	50	2000	2005	**225100280**	-	-	-	
T	50	1986	1986	**225120051**	-	**225120051**	-	
TDR	50	1990	1990	**225102730**	-	**225102730**	-	
TRAFIC M	50	1983	1983	**225120051**	-	**225120051**	-	
TZM R	50	1994	1994	**225101070**	**225101073**	**225102730**	-	
TZR	50	1990	1992	**225101070**	**225101073**	**225102730**	-	
TZR	50	1993	2002	**225101070**	**225101073**	**225103200**	**225103203**	
TZR	50	2003	2003	**225100360**	**225100363**	**225100080**	**225100083**	
V M	50	1983	1983	**225120051**	-	**225120051**	-	
Why	50	1999	1999	**225100190**	**225100193**	**225120051**	-	
YA Axis Mofa	50	1997	1997	**225100190**	**225100193**	**225120051**	-	
YE Zest (Italy)	50	1992	1995	**225103210**	-	**225120061**	-	
YE Zest (Japan)	50	1992	1995	**225100180**	-	-	-	
YFM Raptor	50	2004	2004	**225120061**	-	-	-	
YH	50	1998	1998	**225103210**	-	-	-	
YM Breeze, Fizz	50	1995	1995	**225103210**	-	**225120051**	-	
YN Neo's, LC	50	1997	1997	**225100190**	**225100193**	**225120051**	-	
YQ Aerox	50	1997	2012	**225103210**	-	**225100280**	-	
YSR	50	1987	1991	**225102730**	-	**225120061**	-	
YSR	50	1992	1992	**225102730**	-	-	-	
YF S Moto 4	60	1986	1986	-	-	**225120051**	-	

Modello *Model*	**CC**	**Da** *From*	**A** *To*	RMS YOUR BEST PARTNER **Anteriore Organica** *Front Organic*	SINTER **Anteriore Sinterizzata** *Front Sintered*	RMS YOUR BEST PARTNER **Posteriore Organica** *Rear Organic*	SINTER **Posteriore Sinterizzata** *Rear Sintered*	**Note** *Notes*
YT Tri Zinger	60	1984	1985	-	-	**225120051**	-	
Beluga	80	1989	1989	**225120061**	-	**225120061**	-	
CH Beluga (CH 80)	80	1990	1990	**225120051**	-	-	-	
CV Riva	80	1983	1987	**225120061**	-	**225120061**	-	
CW Beluga	80	1981	1983	**225120061**	-	**225120061**	-	
DT LC-2	80	1985	1992	**225102730**	-	-	-	
DT MX, MXS	80	1984	1985	**225120051**	-	**225120051**	-	
PW	80	1983	1985	-	-	**225120051**	-	
PW	80	1991	1991	-	-	**225120061**	-	
RD LC	80	1983	1983	**225102730**	-	-	-	
T Townmate	80	1983	1997	**225120051**	-	**225120051**	-	
TDR	80	1989	1989	**225102730**	-	**225102730**	-	
TY	80	1983	1983	-	-	**225120061**	-	
TZR	80	1992	1992	**225100180**	-	**225102730**	-	
V DL	80	1983	1983	**225120051**	-	**225120051**	-	
YD	80	1989	1989	**225101420**	**225101423**	**225101790**	-	
YE Zest (Italy)	80	1993	1993	**225103210**	-	-	-	
YE Zest (Japan)	80	1993	1993	**225100180**	-	-	-	
YFM	80	1987	1988	**225120051**	-	-	-	
YFM Badger	80	1995	1995	**225120061**	-	-	-	
YFM Grizzly	80	2005	2005	**225120061**	-	-	-	
YFM Raptor	80	2002	2002	**225120061**	-	-	-	
YSR	80	1986	1986	**225102730**	-	**225120061**	-	
YZ	80	1993	2001	-	-	**225102850**	**225102853**	
YZ , LW	85	2002	2002	-	-	**225102850**	**225102853**	
Axis Pro Foot	90	1994	1994	**225100180**	-	-	-	
CR Target	90	1991	1991	**225100180**	-	**225120061**	-	
JOG	90	1990	1990	**225100180**	-	-	-	
TT-R	90	2000	2000	-	-	**225120061**	-	
YA Axis	90	1990	1990	**225100180**	-	-	-	
YFM RY Raptor	90	2009	2009	**225120061**	-	**225101200**	-	
Aerox	100	2000	2006	**225100190**	**225100193**	-	-	
AG Farmbike	100	1992	1993	**225120051**	-	-	-	
FJ L, LC	100	1984	1984	**225100730**	**225100733**	**225100730**	**225100733**	
Neo's	100	2000	2002	**225100190**	**225100193**	-	-	
RS DX	100	1977	1979	-	-	**225120061**	-	
RS DX	100	1980	1982	-	-	**225120061**	-	
RT A-H	100	1990	1996	**225120061**	-	**225120061**	-	
RXS	100	1983	1997	**225120051**	-	**225120051**	-	
YB	100	1982	1986	-	-	**225120061**	-	
YB	100	1987	1992	**225120061**	-	**225120061**	-	
YW Booster	100	1999	2002	**225100180**	-	-	-	
YZ	100	1982	1983	**225120061**	-	-	-	
Crypton	105	1998	1998	**225102730**	-	**225120051**	-	
TT-R	110	2008	2008	-	-	**225120061**	-	
D'elight	115	2014	2014	**225103290**	**225103293**	-	-	
BWs	125	2010	2010	**225103250**	**225103253**	-	-	
DT LC	125	1985	1987	**225102730**	-	-	-	
DT R	125	1996	2007	**225102730**	-	**225102730**	-	
DT R, Electric	125	1988	2003	**225102730**	-	**225102730**	-	
DT X Supermotard	125	2005	2005	**225101010**	**225101013**	**225101790**	-	
MT	125	2014	2014	**225102830**	**225102833**	**225103070**	**225103073**	
N-Max	125	2015	2015	**225103600**	-	**225103290**	**225103293**	
N-Max	125	2015	-	-	-	-	**225103293**	

Modello *Model*	**CC**	**Da** *From*	**A** *To*	RMS YOUR BEST PARTNER **Anteriore Organica** *Front Organic*	SINTER **Anteriore Sinterizzata** *Front Sintered*	RMS YOUR BEST PARTNER **Posteriore Organica** *Rear Organic*	SINTER **Posteriore Sinterizzata** *Rear Sintered*	**Note** *Notes*
NXC Cygnus	125	2010	2010	**225103300**	-	-	-	
NXC Cygnus X	125	2005	2009	**225102720**	-	-	-	
SR	125	1992	1996	-	-	**225120051**	-	
SR	125	1997	2002	**225100410**	**225100413**	**225120051**	-	
SR Flame	125	1996	1996	**225102730**	-	-	-	
SR SE	125	1982	1982	-	-	**225120061**	-	
SX R	125	1988	1988	**225101440**	-	-	-	
TDR R	125	1993	2003	**225100410**	**225100413**	**225102730**	-	
Tricity	125	2014	2014	**225103550**	-	-	-	Pinza sinistra | *Left Caliper*
Tricity	125	2014	2014	**225103560**	-	-	-	Pinza destra | *Right Caliper*
Tricity	125	2014	-	**225103550**	-	-	-	Pinza sinistra | *Left Caliper*
Tricity	125	2014	-	**225103560**	-	-	-	Pinza destra | *Right Caliper*
TT-R	125	2000	2000	**225120061**	-	**225120061**	-	
TT-R LW	125	2000	2000	-	-	**225120061**	-	
TW	125	1999	1999	**225102660**	**225102663**	**225120061**	-	
TZ	125	1997	1997	**225103030**	**225103033**	-	-	
TZR	125	1989	1992	**225100730**	**225100733**	-	-	
TZR	125	1993	1993	**225100410**	**225100413**	**225100730**	**225100733**	
TZR	125	1994	1994	**225101060**	**225101063**	**225100730**	**225100733**	
TZR R	125	1994	1994	**225101060**	**225101063**	-	-	
VP X-City	125	2008	2008	**225102640**	**225102643**	**225100490**	**225100493**	
WR	125	1991	1997	**225101420**	**225101423**	**225101790**	-	
WR	125	1998	1998	**225100920**	**225100923**	**225102630**	**225102633**	
WR R, XY	125	2009	2009	**225100870**	**225100873**	**225101330**	**225101333**	
XC Cygnus F	125	2000	2000	**225102730**	-	-	-	
XC F	125	2000	2000	**225102730**	-	-	-	
XC TR Cygnus, R	125	1996	1996	**225102730**	-	-	-	
XC Vity	125	2008	2008	**225103290**	**225103293**	-	-	
Xenter	125	2012	2012	**225103250**	**225103253**	-	-	
XN Teos	125	2001	2001	**225100190**	**225100193**	-	-	
XQ Maxter	125	2001	2001	**225100430**	-	**225100490**	**225100493**	
XT	125	1982	1982	-	-	**225120061**	-	
XT R	125	2005	2005	**225102810**	-	**225100080**	**225100083**	
XT X Supermotard	125	2005	2005	**225100360**	**225100363**	**225100080**	**225100083**	
XTZ	125	2005	2005	**225101420**	**225101423**	-	-	
XV Virago	125	1997	2000	**225100410**	**225100413**	-	-	
XVS Drag Star	125	2000	2000	**225100410**	**225100413**	**225120451**	-	
Y Fair Breeze	125	1992	1992	**225120051**	-	-	-	
YBR	125	2006	2007	**225102730**	-	-	-	
YBR	125	2008	2008	**225103290**	**225103293**	-	-	
YFA 1 G-M Breeze	125	1995	1995	**225120061**	-	-	-	
YFM Grizzly	125	2004	2004	**225120061**	-	-	-	
YP Majesty	125	2001	2001	**225100430**	-	**225100490**	**225100493**	
YP R Majesty	125	1999	2000	**225100430**	-	**225120451**	-	
YP X-Max	125	2006	2009	**225100770**	**225100773**	**225100490**	**225100493**	
YP X-Max	125	2010	2010	**225102640**	**225102643**	**225100490**	**225100493**	
YP X-Max ABS	125	2011	2011	**225102640**	**225102643**	**225102660**	**225102663**	
YP X-Max Business ABS	125	2011	2011	**225102640**	**225102643**	**225102660**	**225102663**	
YP X-Max Sport Ed.	125	2011	2011	**225102640**	**225102643**	**225100490**	**225100493**	
YT Tri Moto	125	1980	1981	-	-	-	-	
YW Z	125	2010	2010	**225103250**	**225103253**	-	-	
YZ	125	1988	1988	-	-	**225102730**	-	
YZ	125	1989	1989	**225101420**	**225101423**	**225102850**	**225102853**	
YZ	125	1990	1995	**225101420**	**225101423**	**225101790**	-	

Modello *Model*	**CC**	**Da** *From*	**A** *To*	RMS YOUR BEST PARTNER **Anteriore Organica** *Front Organic*	SINTER **Anteriore Sinterizzata** *Front Sintered*	RMS YOUR BEST PARTNER **Posteriore Organica** *Rear Organic*	SINTER **Posteriore Sinterizzata** *Rear Sintered*	**Note** *Notes*
YZ	125	1996	1997	**225101420**	**225101423**	**225101790**	-	
YZ	125	1998	1998	**225100920**	**225100923**	**225102630**	**225102633**	
YZ	125	2003	2007	**225100920**	**225100923**	**225101450**	**225101453**	
YZ	125	2008	2008	**225102840**	**225102843**	**225101450**	**225101453**	
YZF R	125	2008	2013	**225100430**	-	**225103070**	**225103073**	
YZF R	125	2014	2014	**225102830**	**225102833**	**225103070**	**225103073**	
Crypton X	135	2008	2008	**225103290**	**225103293**	-	-	
FZH Fazer	150	2011	2011	**225100430**	-	-	-	
N-Max	150	2015	2015	**225103600**	-	**225103290**	**225103293**	
N-Max	150	2015	-	-	-	-	**225103293**	
Teos	150	2002	2002	**225100190**	**225100193**	-	-	
XC Fly One	150	1992	1992	**225102730**	-	-	-	
XC Fly One R	150	1998	1998	**225102730**	-	**225120061**	-	
Xenter	150	2012	2012	**225103250**	**225103253**	-	-	
XQ Maxter	150	2001	2001	**225100430**	-	**225100490**	**225100493**	
YP Majesty	150	2001	2001	**225100430**	-	**225100490**	**225100493**	
YZF R15	150	2014	2014	**225103290**	**225103293**	-	-	
DT	175	2000	2000	**225102660**	**225102663**	-	-	
YT Tri Moto	175	1982	1983	**225120061**	-	-	-	
RT	180	1995	1996	**225102730**	-	-	-	
YP R Majesty	180	2003	2003	**225100430**	-	-	-	
YP R Majesty	180	2004	2004	**225100430**	-	**225100490**	**225100493**	
SR Exiter, H, J	185	1981	1982	-	-	**225120061**	-	
BW	200	1985	1988	**225120061**	-	**225120061**	-	
DT	200	1989	1989	**225102730**	-	**225102730**	-	
DT WR	200	1991	1993	**225101420**	**225101423**	**225101790**	-	
IT	200	1985	1985	**225102730**	-	-	-	
SX R	200	1988	1988	**225101440**	-	-	-	
TT	200	1986	1986	**225102730**	-	**225120061**	-	
TW	200	1987	2000	-	-	**225120061**	-	
TW	200	2001	2001	**225102660**	**225102663**	**225120061**	-	
WR	200	1991	1992	**225101420**	**225101423**	**225101790**	-	
XT	200	1985	1985	-	-	**225120061**	-	
YFM DXS-DXW Moto 4	200	1986	1987	**225120061**	-	-	-	
YFM N Moto 4	200	1985	1989	**225120061**	-	-	-	
YFS R Blaster	200	2003	2006	**225101440**	-	**225102850**	**225102853**	
YFS U-P Blaster	200	1988	2002	**225120061**	-	-	-	
YTM K-N Tri Moto	200	1983	1985	**225120061**	-	-	-	
Bronco, Cellow	225	1997	1997	**225102660**	**225102663**	-	-	
Serow	225	1985	1985	**225102730**	-	-	-	
TT S,T	225	1986	2000	**225102730**	-	**225120061**	-	
TTR	225	2001	2001	**225102730**	-	**225120061**	-	
XT	225	1992	2000	**225102730**	-	**225120061**	-	
XT	225	2001	2001	**225102660**	**225102663**	**225120061**	-	
XT Serow	225	1986	1986	**225102730**	-	**225120061**	-	
YFM Moto 4	225	1986	1988	**225120061**	-	-	-	
YTM DRN, DRS Tri Moto	225	1985	1986	**225120061**	-	-	-	
YTM DXK, DXN Tri Moto	225	1983	1985	**225120061**	-	-	-	
TT-R	230	2005	2005	**225101420**	**225101423**	-	-	
FZ Phazer N, S	250	1985	1986	**225100730**	**225100733**	-	-	
FZR	250	1987	1988	-	**225103093**	-	-	
FZX Zeal	250	1991	1992	**225100400**	**225100403**	-	-	
IT	250	1985	1985	**225102730**	-	-	-	
MT-25	250	2016	2016	**225103480**	**225103483**	-	-	

Modello *Model*	**CC**	**Da** *From*	**A** *To*	**Anteriore Organica** *Front Organic*	**Anteriore Sinterizzata** *Front Sintered*	**Posteriore Organica** *Rear Organic*	**Posteriore Sinterizzata** *Rear Sintered*	**Note** *Notes*
RD LC	250	1983	1983	-	-	**225100730**	**225100733**	
SRV	250	1992	1997	**225100400**	**225100403**	-	-	
TDR	250	1988	1992	-	**225103093**	-	-	
TT	250	1993	2003	**225101420**	**225101423**	**225101790**	-	
TY R	250	1991	1992	**225100080**	**225100083**	-	-	
TY Z	250	1993	1996	**225100080**	**225100083**	**225100080**	**225100083**	
TY Z (Scottish)	250	1996	1996	**225102730**	-	**225101790**	-	
TZ	250	1990	2001	**225103030**	**225103033**	-	-	
TZ	250	2002	2002	**225103030**	**225103033**	-	-	Pinza radiale | *Radial Caliper*
TZR	250	1987	1988	-	**225103093**	-	-	
TZR	250	1989	1992	**225101060**	**225101063**	-	-	
TZR R	250	1994	1994	**225100520**	**225100523**	-	-	
VP X-City	250	2007	2007	**225102640**	**225102643**	**225102660**	**225102663**	
WR	250	1990	1997	**225101420**	**225101423**	**225101790**	-	
WR	250	1998	2002	**225100920**	**225100923**	**225102630**	**225102633**	
WR F	250	2001	2002	**225100920**	**225100923**	**225102630**	**225102633**	
WR F	250	2003	2013	**225100920**	**225100923**	**225101450**	**225101453**	
WR F Efi	250	2015	2015	**225100920**	**225100923**	**225101450**	**225101453**	
WR R	250	2008	2008	**225100920**	**225100923**	**225101450**	**225101453**	
WR X	250	2008	2008	**225100870**	**225100873**	**225101450**	**225101453**	
XG Tricker	250	2005	2005	**225102660**	**225102663**	**225101790**	-	
XT	250	2008	2008	**225102660**	**225102663**	**225101790**	-	
XV S Virago	250	1995	2007	**225100410**	**225100413**	**225120451**	-	
XVS Drag Star	250	2001	2001	**225100410**	**225100413**	**225120451**	-	
YBR	250	2007	2007	**225101070**	**225101073**	-	-	
YD S	250	1990	1990	**225100730**	**225100733**	-	-	
YFM AN Bruin 2x4	250	2005	2005	**225101440**	-	-	-	
YFM Bear Tracker	250	2001	2001	**225101440**	-	-	-	
YFM Raptor	250	2009	2009	-	-	**225102850**	**225102853**	
YP D Majesty DX	250	1998	1998	**225100410**	**225100413**	**225102660**	**225102663**	
YP Majesty	250	1996	1996	**225100410**	**225100413**	**225120460**	-	
YP Majesty DX/ABS	250	1999	2014	**225100410**	**225100413**	**225102660**	**225102663**	
YP X-Max	250	2005	2009	**225100770**	**225100773**	**225102660**	**225102663**	
YP X-Max	250	2010	2013	**225102640**	**225102643**	**225102660**	**225102663**	
YP X-Max	250	2014	2014	**225102640**	**225102643**	**225103270**	**225103273**	
YTZ Tri Moto	250	1985	1986	**225102730**	-	**225102730**	-	
YZ	250	1988	1988	-	-	**225102730**	-	
YZ	250	1989	1989	**225101420**	**225101423**	**225102850**	**225102853**	
YZ	250	1998	2002	**225100920**	**225100923**	**225102630**	**225102633**	
YZ	250	2003	2007	**225100920**	**225100923**	**225101450**	**225101453**	
YZ	250	2008	2008	**225102840**	**225102843**	**225101450**	**225101453**	
YZ A	250	1990	1990	**225101420**	**225101423**	**225101790**	-	
YZ B1-J1	250	1991	1997	**225101420**	**225101423**	**225101790**	-	
YZ F	250	2001	2002	**225100920**	**225100923**	**225102630**	**225102633**	
YZ F	250	2003	2006	**225100920**	**225100923**	**225101450**	**225101453**	
YZ F	250	2007	2013	**225102840**	**225102843**	**225101450**	**225101453**	
YZ F Efi	250	2014	2015	**225102840**	**225102843**	**225101450**	**225101453**	
YZ F Efi	250	2016	2016	**225102840**	**225102843**	**225101450**	**225101453**	
YZ FX Efi	250	2015	2015	**225102840**	**225102843**	**225101450**	**225101453**	
YZ WRA,WRB	250	1990	1991	**225101420**	**225101423**	**225101790**	-	
YZF R25	250	2015	2015	**225103480**	**225103483**	-	-	
VP Versity	300	2003	2004	**225100430**	-	**225100430**	-	
VP Versity	300	2005	2006	**225102640**	**225102643**	**225100430**	-	
YFM Warrior	300	1989	1989	**225101440**	-	**225102850**	**225102853**	

Modello *Model*	**CC**	**Da** *From*	**A** *To*	RMS YOUR BEST PARTNER **Anteriore Organica** *Front Organic*	SINTER **Anteriore Sinterizzata** *Front Sintered*	RMS YOUR BEST PARTNER **Posteriore Organica** *Rear Organic*	SINTER **Posteriore Sinterizzata** *Rear Sintered*	**Note** *Notes*
MT-03	321	2016	2016	**225103480**	**225103483**	-	-	
YZF R3	321	2015	2015	**225103480**	**225103483**	-	-	
RD LC YPVS	350	1983	1984	-	-	**225100730**	**225100733**	
RZ	350	1984	1985	-	-	**225100730**	**225100733**	
TT	350	1995	1995	**225101420**	**225101423**	**225101790**	-	
XT	350	1985	1996	**225102730**	-	**225120451**	-	
YFM Bruin 2x4, 4x4	350	2004	2004	**225101440**	-	-	-	
YFM ERT, ERU	350	1987	1988	**225120061**	-	-	-	
YFM FWB L, LC Big Bear	350	1999	1999	**225101440**	-	-	-	
YFM FXG-FXM Wolverine	350	1995	1995	**225101440**	-	**225102850**	**225102853**	
YFM R Raptor	350	2004	2004	**225102850**	**225102853**	**225102850**	**225102853**	
YFM XG,XH Warrior	350	1995	1996	**225101440**	-	**225102850**	**225102853**	
YFM XT, XU Warrior	350	1987	1988	**225102730**	-	**225102850**	**225102853**	
YFM XW, XA-M Warrior	350	1989	1989	**225101440**	-	**225101440**	-	
YFZ Banshee	350	1987	1989	**225102730**	-	**225102850**	**225102853**	
YFZ Banshee	350	1990	2006	**225101440**	-	**225102850**	**225102853**	
YZ	360	1989	1989	**225101420**	**225101423**	**225102850**	**225102853**	
Artesia	400	1991	1991	**225103200**	**225103203**	**225102730**	-	
FZ N	400	1987	1987	**225100730**	**225100733**	-	-	
FZR	400	1987	1987	**225100730**	**225100733**	-	-	
FZR	400	1988	1990	-	**225103093**	-	-	
FZR A	400	1990	1990	-	**225103123**	-	-	
FZR R	400	1991	1991	**225101060**	**225101063**	-	-	
SR	400	2014	2014	**225100410**	**225100413**	-	-	
SRX	400	1985	1986	-	**225103123**	-	-	
SRX	400	1987	1987	-	**225103093**	-	-	
WR F	400	1998	1998	**225100920**	**225100923**	**225101790**	-	
WR F	400	1999	2000	**225100920**	**225100923**	**225102630**	**225102633**	
XJ Diversion	400	1991	1991	**225100400**	**225100403**	-	-	
XJR R	400	1995	1995	**225101100**	**225101103**	**225100730**	**225100733**	
XS Z	400	1983	1983	**225100730**	**225100733**	**225100730**	**225100733**	
XT	400	1986	1986	**225102730**	-	-	-	
YFM FAM Kodiak	400	2000	2000	**225101440**	-	**225102870**	**225102873**	
YFM FAR Kodiak Automatic	400	2003	2003	**225101440**	-	-	-	
YFM FWN Big Bear 4WD	400	2000	2000	**225101440**	-	**225102870**	**225102873**	
YFM N Big Bear 2WD	400	2000	2000	**225101440**	-	**225102870**	**225102873**	
YP Majesty	400	2004	2004	**225100400**	**225100403**	**225100800**	**225100803**	
YP Majesty	400	2005	2005	**225100410**	**225100413**	**225100800**	**225100803**	
YP R X-Max	400	2013	2013	**225102640**	**225102643**	**225102740**	**225102743**	
YP RA X-Max	400	2014	2014	**225102640**	**225102643**	**225102740**	**225102743**	
YZ	400	1998	1998	**225100920**	**225100923**	**225101790**	-	
YZ F	400	1999	1999	**225100920**	**225100923**	**225102630**	**225102633**	
WR F	426	2001	2002	**225100920**	**225100923**	**225102630**	**225102633**	
YZ F	426	2000	2002	**225100920**	**225100923**	**225102630**	**225102633**	
WR F	450	2003	2015	**225100920**	**225100923**	**225101450**	**225101453**	
WR F Efi	450	2016	2016	**225102840**	**225102843**	**225101450**	**225101453**	
YFM FA_ Kodiak	450	2003	2003	**225101440**	-	**225102870**	**225102873**	
YFM Wolverine	450	2006	2006	**225101440**	-	**225102870**	**225102873**	
YFZ S	450	2004	2005	**225101070**	**225101073**	**225102850**	**225102853**	Pinza sinistra | *Left Caliper*
YFZ S	450	2004	2005	**225101420**	**225101423**	**225102850**	**225102853**	Pinza destra | *Right Caliper*
YFZ S	450	2006	2009	**225101070**	**225101073**	**225100270**	**225100273**	Pinza sinistra | *Left Caliper*
YFZ S	450	2006	2009	**225101420**	**225101423**	**225100270**	**225100273**	Pinza destra | *Right Caliper*
YXR Rhino	450	2006	2006	**225101070**	**225101073**	**225103180**	**225103183**	Pinza destra | *Right Caliper*
YXR Rhino	450	2006	2006	**225101420**	**225101423**	**225103180**	**225103183**	Pinza sinistra | *Left Caliper*

Modello *Model*	**CC**	**Da** *From*	**A** *To*	RMS YOUR BEST PARTNER **Anteriore Organica** *Front Organic*	SINTER **Anteriore Sinterizzata** *Front Sintered*	RMS YOUR BEST PARTNER **Posteriore Organica** *Rear Organic*	SINTER **Posteriore Sinterizzata** *Rear Sintered*	**Note** *Notes*
YZ F	450	2003	2007	**225100920**	**225100923**	**225101450**	**225101453**	
YZ F	450	2008	2009	**225102840**	**225102843**	**225101450**	**225101453**	
YZ F Efi	450	2010	2013	**225102840**	**225102843**	**225101450**	**225101453**	
YZ F Efi	450	2014	2015	**225102840**	**225102843**	**225101450**	**225101453**	
YZ F Efi	450	2016	2016	**225102840**	**225102843**	**225101450**	**225101453**	
YZ FX Efi	450	2016	2016	**225102840**	**225102843**	**225101450**	**225101453**	
FZR (Austria)	500	1989	1989	**225100730**	**225100733**	**225100730**	**225100733**	
FZR R (Austria)	500	1990	1991	-	-	**225100730**	**225100733**	
RD	500	1983	1983	**225100730**	**225100733**	**225100730**	**225100733**	
RD LC	500	1984	1986	**225100730**	**225100733**	-	-	
RZ	500	1984	1986	**225100730**	**225100733**	-	-	
WR B	500	1991	1991	**225101420**	**225101423**	**225102730**	-	
WR ZD,ZE	500	1992	1993	**225101420**	**225101423**	**225101790**	-	
XP TMAX	500	2001	2003	**225100400**	**225100403**	**225101410**	**225101413**	
XP TMAX	500	2004	2007	**225100410**	**225100413**	**225100800**	**225100803**	
XP TMAX	500	2008	2011	**225101060**	**225101063**	**225100800**	**225100803**	
XP TMAX Tech Max	500	2011	2011	**225101060**	**225101063**	**225100800**	**225100803**	
XT	500	1986	1986	**225102730**	-	-	-	
XT E (Austria)	500	1990	1996	**225103200**	**225103203**	**225102730**	-	
XP TMAX	530	2012	2012	**225101060**	**225101063**	**225101410**	**225101413**	
XP TMAX DX	530	2017	2017	**225101060**	**225101063**	**225101410**	**225101413**	
XP TMAX Iron Max	530	2015	2015	**225101060**	**225101063**	**225101410**	**225101413**	
XP TMAX SX	530	2017	2017	**225101060**	**225101063**	**225101410**	**225101413**	
XV DX Virago	535	1998	2003	**225100400**	**225100403**	-	-	
XV S Virago	535	1996	2003	**225100400**	**225100403**	-	-	
DT N	600	1985	1985	**225102730**	-	-	-	
FJ	600	1984	1984	**225100730**	**225100733**	**225100730**	**225100733**	
FZ	600	1986	1987	**225100730**	**225100733**	**225100730**	**225100733**	
FZ S, SC	600	1986	1986	**225100730**	**225100733**	-	-	
FZ6	600	2004	2004	**225100410**	**225100413**	**225100930**	**225100933**	
FZ6 Fazer	600	2004	2004	**225100410**	**225100413**	**225100930**	**225100933**	
FZ6 Fazer S2	600	2007	2007	**225101060**	**225101063**	**225100930**	**225100933**	
FZ6 Fazer S2 ABS	600	2007	2007	**225101060**	**225101063**	**225100930**	**225100933**	
FZ6 S2	600	2007	2007	**225101060**	**225101063**	**225100930**	**225100933**	
FZ6 S2 ABS	600	2007	2007	**225101060**	**225101063**	**225100930**	**225100933**	
FZ6R	600	2009	2009	**225100410**	**225100413**	**225102610**	**225102613**	
FZR	600	1989	1989	**225100730**	**225100733**	**225100730**	**225100733**	
FZR R	600	1990	1991	-	-	**225100730**	**225100733**	
FZR R	600	1992	1995	-	-	**225100730**	**225100733**	
FZS Fazer	600	1998	2003	**225101060**	**225101063**	-	-	
FZS S Fazer	600	2001	2003	**225101060**	**225101063**	-	-	
SRX	600	1988	1989	-	**225103093**	-	-	
SRX	600	1990	1990	-	**225103123**	-	-	
TT	600	1985	1988	**225102730**	-	-	-	
TT E,S	600	1996	2001	**225100430**	-	**225101330**	**225101333**	
TT R	600	1993	1995	**225100430**	-	**225101790**	-	
TT R	600	1998	2007	**225100430**	-	**225101330**	**225101333**	
XJ	600	1983	1991	**225100730**	**225100733**	**225100730**	**225100733**	
XJ N	600	1991	1997	**225100400**	**225100403**	-	-	
XJ N	600	1998	1998	**225100410**	**225100413**	-	-	
XJ S Diversion	600	1991	1997	**225100400**	**225100403**	-	-	
XJ S Diversion	600	1998	2003	**225100410**	**225100413**	-	-	
XJ6 Diversion	600	2009	2009	**225100410**	**225100413**	**225102610**	**225102613**	
XJ6-F	600	2009	2012	**225100410**	**225100413**	**225102610**	**225102613**	

Modello *Model*	**CC**	**Da** *From*	**A** *To*	RMS YOUR BEST PARTNER **Anteriore Organica** *Front Organic*	SINTER **Anteriore Sinterizzata** *Front Sintered*	RMS YOUR BEST PARTNER **Posteriore Organica** *Rear Organic*	SINTER **Posteriore Sinterizzata** *Rear Sintered*	**Note** *Notes*
XJ6-F	600	2013	2013	**225100410**	**225100413**	**225100930**	**225100933**	
XJ6-N	600	2009	2012	**225100410**	**225100413**	**225102610**	**225102613**	
XJ6-N	600	2013	2013	**225100410**	**225100413**	**225100930**	**225100933**	
XJ6-S	600	2009	2012	**225100410**	**225100413**	**225102610**	**225102613**	
XJ6-S	600	2013	2013	**225100410**	**225100413**	**225100930**	**225100933**	
XT E	600	1990	1990	**225103200**	**225103203**	**225102730**	-	
XT K	600	1991	1991	**225103200**	**225103203**	**225102730**	-	
XT Z, Tenere	600	1987	1990	-	-	**225102730**	-	
YFM 4x4 Grizzly	600	1998	2001	**225102850**	**225102853**	-	-	
YX Radian	600	1987	1990	**225100730**	**225100733**	-	-	
YZF R Thunder Cat	600	1996	2003	**225101060**	**225101063**	**225100730**	**225100733**	
YZF R6	600	1999	2002	**225101060**	**225101063**	**225102660**	**225102663**	
YZF R6	600	2003	2004	**225101060**	**225101063**	**225100930**	**225100933**	
YZF R6	600	2005	2016	**225101060**	**225101063**	**225100930**	**225100933**	Pinza radiale | *Radial Caliper*
YZF R6	600	2017	2017	**225101060**	**225101063**	**225102930**	**225102933**	Pinza radiale | *Radial Caliper*
XVS A Drag Star Classic	650	1998	2006	**225100400**	**225100403**	-	-	
XVS Drag Star	650	1997	2006	**225100400**	**225100403**	-	-	
MT-03	660	2006	2013	**225100410**	**225100413**	**225101330**	**225101333**	
Rhino	660	2005	2005	**225101070**	**225101073**	**225103180**	**225103183**	Pinza destra | *Right Caliper*
Rhino	660	2005	2005	**225101420**	**225101423**	**225103180**	**225103183**	Pinza sinistra | *Left Caliper*
SZR	660	1996	2001	**225100520**	**225100523**	**225100010**	**225100013**	
XT R	660	2004	2011	**225101010**	**225101013**	**225101330**	**225101333**	
XT X	660	2004	2013	**225101100**	**225101103**	**225101330**	**225101333**	
XT Z Tenere	660	2008	2014	**225100430**	-	**225101330**	**225101333**	
XT Z Tenere ABS	660	2011	2014	**225100430**	-	**225101330**	**225101333**	
XTZ Tenere	660	1991	1998	**225103200**	**225103203**	**225102730**	-	
YFM FWAP 4x4 Grizzly	660	2002	2002	**225102850**	**225102853**	-	-	
YFM RN Raptor	660	2001	2001	**225102850**	**225102853**	**225102850**	**225102853**	
FZ	700	1987	1987	**225100730**	**225100733**	**225100730**	**225100733**	
FZX Fazer	700	1987	1987	**225100730**	**225100733**	**225100730**	**225100733**	
MT-07	700	2014	2014	**225101060**	**225101063**	**225100930**	**225100933**	
MT-07 Moto Cage	700	2015	2015	**225101060**	**225101063**	**225100930**	**225100933**	
MT-07 Tracer	700	2016	2016	**225101060**	**225101063**	**225100930**	**225100933**	
XJ	700	1986	1986	**225100730**	**225100733**	-	-	
XJ Maxim	700	1985	1985	**225100730**	**225100733**	**225100730**	**225100733**	
XSR	700	2016	2016	**225101060**	**225101063**	**225100930**	**225100933**	
XV L, LC	700	1984	1984	**225100730**	**225100733**	-	-	
XV Virago	700	1987	1987	**225100730**	**225100733**	-	-	
YFM R Raptor	700	2006	2008	**225101070**	**225101073**	**225103180**	**225103183**	Pinza destra | *Right Caliper*
YFM R Raptor	700	2006	2008	**225101420**	**225101423**	**225103180**	**225103183**	Pinza sinistra | *Left Caliper*
YFM Raptor	700	2009	2012	**225101070**	**225101073**	-	-	
YFM Raptor	700	2009	2012	**225101420**	**225101423**	**225103180**	**225103183**	
YFM Raptor	700	2013	2013	**225101070**	**225101073**	-	-	
YFM Raptor	700	2013	2013	**225101420**	**225101423**	**225100270**	**225100273**	
YXR Rhino	700	2008	2008	**225101070**	**225101073**	**225101070**	**225101073**	Pinza sinistra | *Left Caliper*
YXR Rhino	700	2008	2008	**225101420**	**225101423**	**225101420**	**225101423**	Pinza destra | *Right Caliper*
FZ	750	1985	1986	**225100730**	**225100733**	**225100730**	**225100733**	
FZ Genesis	750	1986	1986	**225100730**	**225100733**	-	-	
FZ Genesis	750	1987	1988	**225100730**	**225100733**	**225100730**	**225100733**	
FZ Genesis	750	1989	1992	-	**225103093**	**225100730**	**225100733**	
FZR R	750	1989	1992	**225103030**	**225103033**	**225100730**	**225100733**	
FZR R Genesis	750	1987	1988	-	**225103123**	**225100730**	**225100733**	
FZX Fazer	750	1986	1990	**225100730**	**225100733**	**225100730**	**225100733**	
Maxim	750	1981	1981	-	-	**225100730**	**225100733**	

Modello *Model*	**CC**	**Da** *From*	**A** *To*	**Anteriore Organica** *Front Organic*	**Anteriore Sinterizzata** *Front Sintered*	**Posteriore Organica** *Rear Organic*	**Posteriore Sinterizzata** *Rear Sintered*	**Note** *Notes*
TX A	750	1973	1976	-	-	**225100730**	**225100733**	
VF Virago	750	1988	1988	**225100730**	**225100733**	-	-	
XJ	750	1983	1984	**225100730**	**225100733**	**225100730**	**225100733**	
XTZ Super Tenere	750	1989	1995	**225101070**	**225101073**	**225101070**	**225101073**	Pinza destra | *Right Caliper*
XTZ Super Tenere	750	1989	1995	**225101420**	**225101423**	**225101070**	**225101073**	Pinza sinistra | *Left Caliper*
XV	750	1989	1992	**225100730**	**225100733**	-	-	
XV Virago	750	1994	1997	**225100400**	**225100403**	-	-	
YZF R, SP	750	1993	1997	-	-	**225100730**	**225100733**	
YZF R7 OW02	750	1999	2002	**225101060**	**225101063**	-	-	
Fazer 8	800	2010	2010	**225101060**	**225101063**	**225100930**	**225100933**	
FZ8	800	2010	2014	**225101060**	**225101063**	**225100930**	**225100933**	
TDM	850	1991	1995	-	**225103093**	**225100730**	**225100733**	
TDM	850	1996	2001	-	-	**225100730**	**225100733**	
TRX	850	1995	2000	-	**225103123**	**225100730**	**225100733**	
TRX (Italy)	850	1995	1995	**225101100**	**225101103**	**225100730**	**225100733**	
MT-09	900	2014	2014	**225101060**	**225101063**	**225100930**	**225100933**	Pinza radiale | *Radial Caliper*
MT-09 Sport Tracker	900	2015	2015	**225101060**	**225101063**	**225100930**	**225100933**	Pinza radiale | *Radial Caliper*
MT-09 Street Rally	900	2014	2014	**225101060**	**225101063**	**225100930**	**225100933**	Pinza radiale | *Radial Caliper*
MT-09 Tracer	900	2015	2015	**225101060**	**225101063**	**225100930**	**225100933**	Pinza radiale | *Radial Caliper*
TDM	900	2002	2014	**225101060**	**225101063**	**225103130**	**225103133**	
XJ	900	1983	1983	**225100730**	**225100733**	**225100730**	**225100733**	
XJ F	900	1985	1993	**225100730**	**225100733**	**225100730**	**225100733**	
XJ S, Diversion	900	1994	2003	**225100400**	**225100403**	**225100730**	**225100733**	
XSR	900	2016	2016	**225101060**	**225101063**	**225100930**	**225100933**	
XV Virago	920	1981	1981	-	-	**225100730**	**225100733**	
SCR Scrambler	950	2017	2017	**225100400**	**225100403**	**225103130**	**225103133**	
XV Bolt	950	2014	2014	**225100400**	**225100403**	**225103130**	**225103133**	
XV Bolt C-Spec	950	2015	2015	**225100400**	**225100403**	**225103130**	**225103133**	
XV Bolt R-Spec	950	2014	2014	**225100400**	**225100403**	**225103130**	**225103133**	
XVS A Midnight Star	950	2009	2009	**225100400**	**225100403**	**225103130**	**225103133**	
FZ1 Fazer	1000	2006	2006	**225101060**	**225101063**	**225100930**	**225100933**	
FZR	1000	1994	1995	-	-	**225100730**	**225100733**	
FZR EX UP	1000	1990	1991	-	-	**225100730**	**225100733**	
FZR EX UP	1000	1992	1993	-	-	**225100730**	**225100733**	
FZR Genesis	1000	1987	1989	-	**225103123**	**225100730**	**225100733**	
FZS Fazer	1000	2001	2005	**225101060**	**225101063**	-	-	
GTS	1000	1993	1999	-	-	**225100730**	**225100733**	
MT-10	1000	2016	2016	**225101060**	**225101063**	**225100930**	**225100933**	
MT-10 SP	1000	2017	2017	**225101060**	**225101063**	**225100930**	**225100933**	
XV L, C	1000	1984	1984	**225100730**	**225100733**	**225100730**	**225100733**	
XV Virago	1000	1986	1986	**225100730**	**225100733**	-	-	
YZF R Thunder Ace	1000	1996	1999	**225101060**	**225101063**	**225100730**	**225100733**	
YZF R1	1000	1998	2001	**225101060**	**225101063**	-	-	
YZF R1	1000	2002	2003	**225101060**	**225101063**	**225102660**	**225102663**	
YZF R1	1000	2004	2006	**225101060**	**225101063**	**225100930**	**225100933**	Pinza radiale | *Radial Caliper*
YZF R1	1000	2015	2015	**225101060**	**225101063**	**225102930**	**225102933**	Pinza radiale | *Radial Caliper*
YZF R1 SP	1000	2006	2006	**225101060**	**225101063**	**225100930**	**225100933**	Pinza radiale | *Radial Caliper*
YZF R1(4-pad)	1000	2007	2014	-	**225102973**	**225100930**	**225100933**	Pinza radiale | *Radial Caliper*
YZF R1(4-pad) ABS	1000	2012	2014	-	**225102973**	**225100930**	**225100933**	Pinza radiale | *Radial Caliper*
YZF R1M	1000	2015	2015	**225101060**	**225101063**	**225102930**	**225102933**	Pinza radiale | *Radial Caliper*
YZF R1S	1000	2016	2016	**225101060**	**225101063**	**225102930**	**225102933**	Pinza radiale | *Radial Caliper*
BT Bulldog	1100	2002	2006	**225101060**	**225101063**	**225100730**	**225100733**	
FJ	1100	1983	1985	**225100730**	**225100733**	**225100730**	**225100733**	
XV Virago	1100	1986	1993	**225100730**	**225100733**	-	-	

Modello *Model*	**CC**	**Da** *From*	**A** *To*	**Anteriore Organica** *Front Organic*	**Anteriore Sinterizzata** *Front Sintered*	**Posteriore Organica** *Rear Organic*	**Posteriore Sinterizzata** *Rear Sintered*	**Note** *Notes*
XV Virago	1100	1994	1998	**225100400**	**225100403**	-	-	
XV Virago	1100	1999	1999	**225100410**	**225100413**	**225100730**	**225100733**	
XVS Drag Star	1100	1999	2006	**225100410**	**225100413**	**225100730**	**225100733**	
XVS Drag Star Classic	1100	2000	2006	**225100410**	**225100413**	**225100730**	**225100733**	
FJ	1200	1986	1987	**225100730**	**225100733**	**225100730**	**225100733**	
FJ	1200	1988	1990	-	**225103123**	**225100730**	**225100733**	
FJ ABS	1200	1991	1993	-	**225103123**	**225100730**	**225100733**	
V-MAX	1200	1985	1989	**225100730**	**225100733**	**225100730**	**225100733**	
V-MAX	1200	1990	1992	**225100730**	**225100733**	**225100730**	**225100733**	
V-MAX	1200	1993	2003	-	-	**225100730**	**225100733**	
XJR	1200	1994	1998	-	**225103123**	**225100730**	**225100733**	
XJR (Italy)	1200	1995	1998	**225101100**	**225101103**	**225100730**	**225100733**	
XJR SP	1200	1997	1998	-	**225103123**	**225100730**	**225100733**	
XTZ Super Tenere	1200	2010	2010	**225101060**	**225101063**	**225103130**	**225103133**	
XTZ Super Tenere ZE	1200	2014	2014	**225101060**	**225101063**	**225103130**	**225103133**	
XV	1200	1984	1984	**225100730**	**225100733**	**225100730**	**225100733**	
XV Venture Royale	1200	1985	1985	**225100730**	**225100733**	**225100730**	**225100733**	
XV Z12T	1200	1984	1984	**225100730**	**225100733**	**225100730**	**225100733**	
XVT T, Vent. Royale	1200	1984	1984	**225100730**	**225100733**	**225100730**	**225100733**	
FJR	1300	2001	2003	**225101060**	**225101063**	**225103130**	**225103133**	
FJR A	1300	2013	2015	**225100380**	**225100383**	**225103130**	**225103133**	
FJR A	1300	2016	2016	**225100380**	**225100383**	**225103130**	**225103133**	
FJR ABS	1300	2003	2005	**225101060**	**225101063**	**225103130**	**225103133**	
FJR ABS	1300	2006	2012	**225100380**	**225100383**	**225103130**	**225103133**	
FJR AE	1300	2016	2016	**225100380**	**225100383**	**225103130**	**225103133**	
FJR AS	1300	2013	2015	**225100380**	**225100383**	**225103130**	**225103133**	
FJR AS	1300	2016	2016	**225100380**	**225100383**	**225103130**	**225103133**	
XJR	1300	1999	2001	**225101060**	**225101063**	**225100730**	**225100733**	
XJR	1300	2002	2002	**225101060**	**225101063**	-	-	
XJR Racer	1300	2015	2015	**225101060**	**225101063**	-	-	
XJR SP	1300	2001	2001	**225101060**	**225101063**	**225100730**	**225100733**	
XVS A Midnight Star	1300	2007	2011	**225100410**	**225100413**	**225103130**	**225103133**	
XVS Custom	1300	2014	2014	**225100410**	**225100413**	**225103130**	**225103133**	
XVS Stryker	1300	2011	2011	**225100400**	**225100403**	**225103130**	**225103133**	
XVZ A Royal Star	1300	1996	2007	-	**225103123**	-	**225103093**	
XVZ AT Royal Star Tour Classic	1300	1997	2007	-	**225103123**	-	**225103093**	
XVZ Royal Star Boulevard	1300	1999	1999	-	**225103123**	-	**225103093**	
XVZ TF Royal Star Venture	1300	1999	1999	**225100400**	**225100403**	-	**225103093**	
XVZ Venture Royale	1300	1986	1989	-	**225103123**	-	**225103093**	
XVZ Venture Royale	1300	1990	1995	-	**225103123**	-	**225103093**	
XV A Wild Star	1600	1999	2007	**225100400**	**225100403**	-	**225103093**	
MT-01	1700	2005	2006	**225101060**	**225101063**	**225102640**	**225102643**	Pinza radiale | *Radial Caliper*
MT-01	1700	2007	2007	-	**225102973**	**225102640**	**225102643**	Pinza radiale | *Radial Caliper*
VMX V-Max	1700	2009	2009	-	**225102973**	**225103130**	**225103133**	
XV PC Road Star Warrior	1700	2003	2007	**225101060**	**225101063**	**225103130**	**225103133**	
XV Road Star Warrior	1700	2002	2002	**225101060**	**225101063**	-	**225103093**	
XV A	1900	2011	2011	**225100380**	**225100383**	**225103130**	**225103133**	
XV A Midnight Star	1900	2006	2010	**225101060**	**225101063**	**225103130**	**225103133**	

225100010

225100013

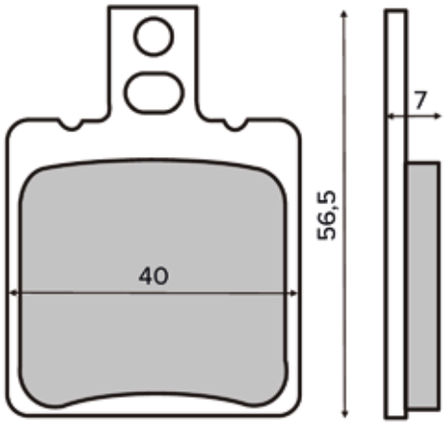

225100020

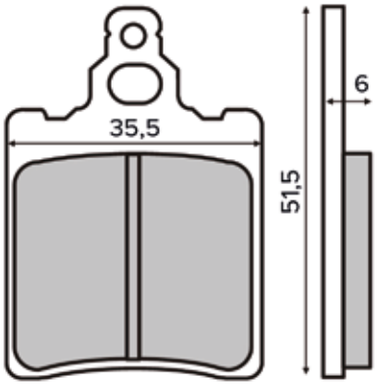

225100030

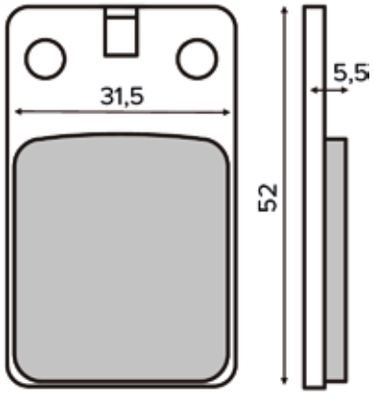

225100040

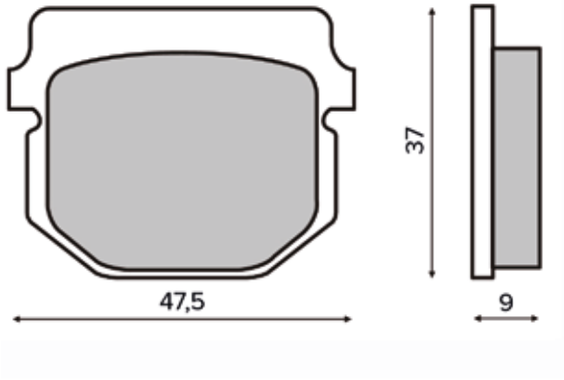

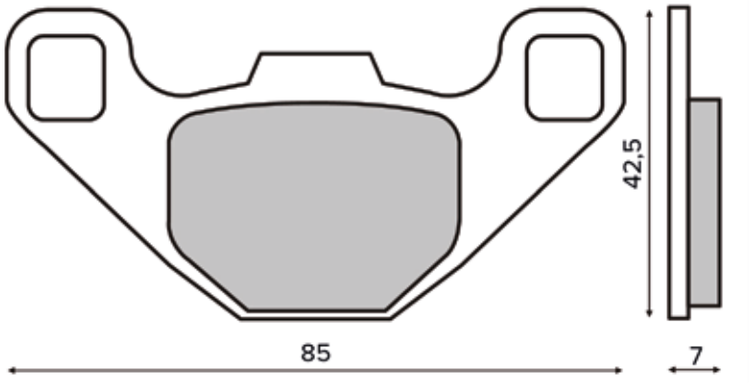

225100060

225100063

225100070

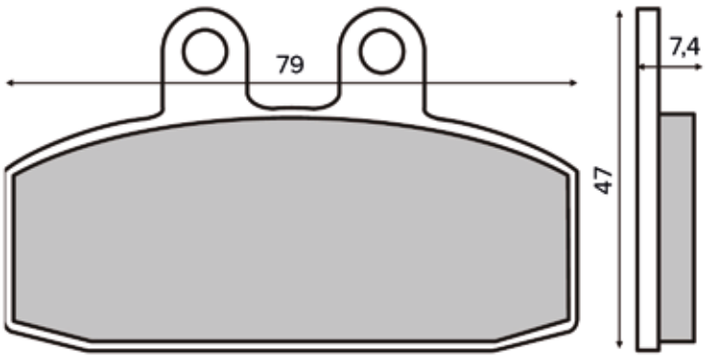

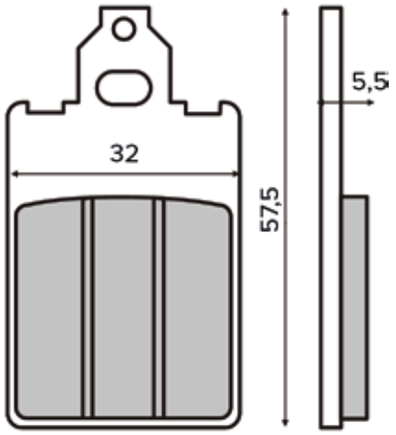

225100080

225100083

225100160

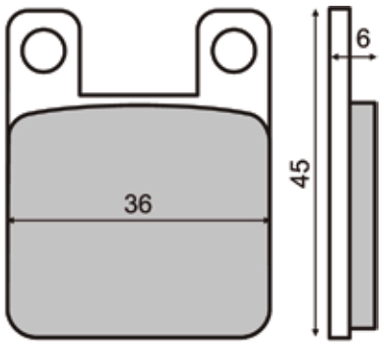

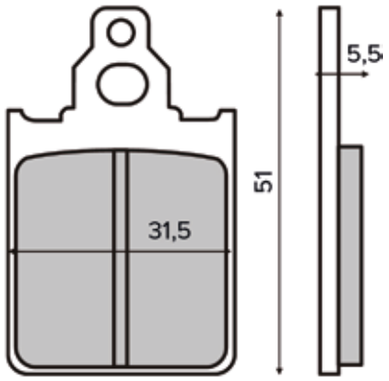

225100180

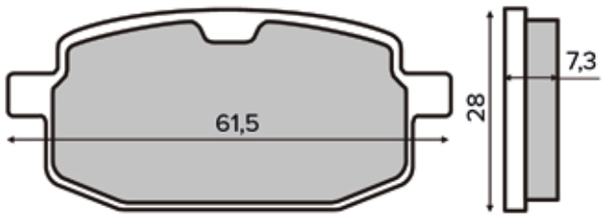

225100190

SINTER HIGH PERFORMANCE BRAKES

225100193

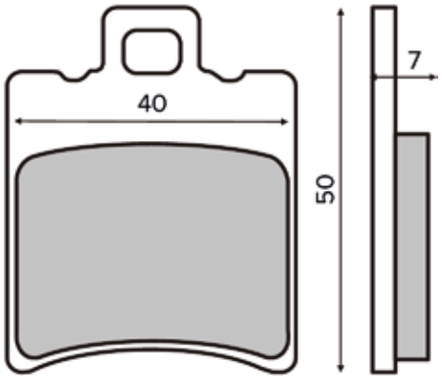

225100240

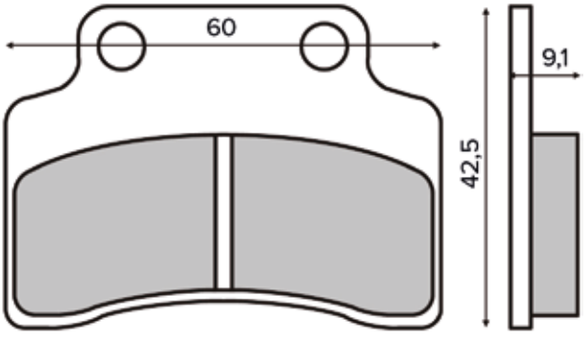

225100250

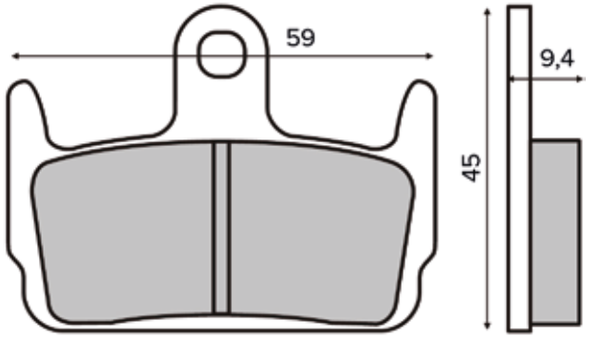

225100270

SINTER HIGH PERFORMANCE BRAKES

225100273

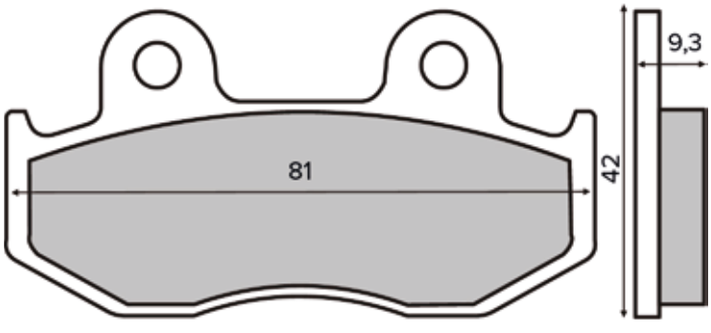

225100280

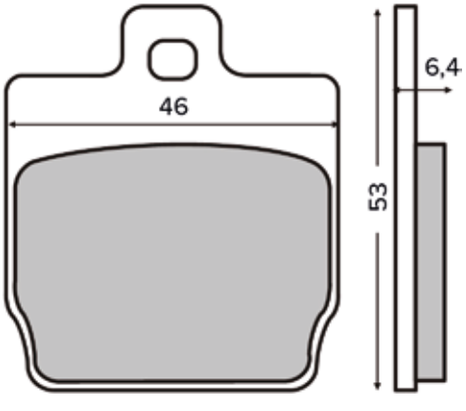

225100300

225100303

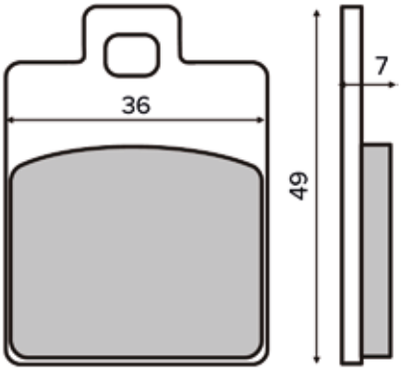

225100310

225100313

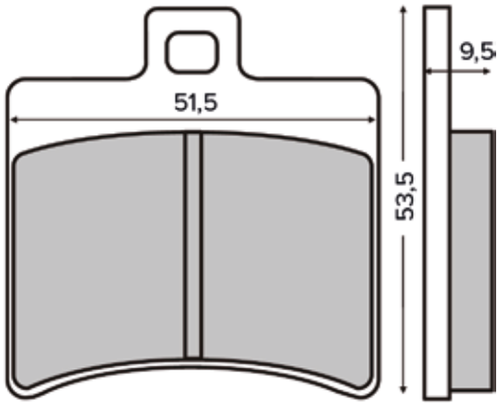

225100330

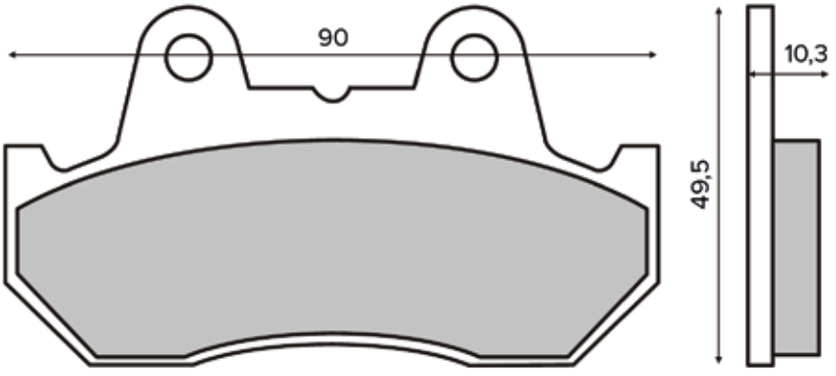

225100340

225100343

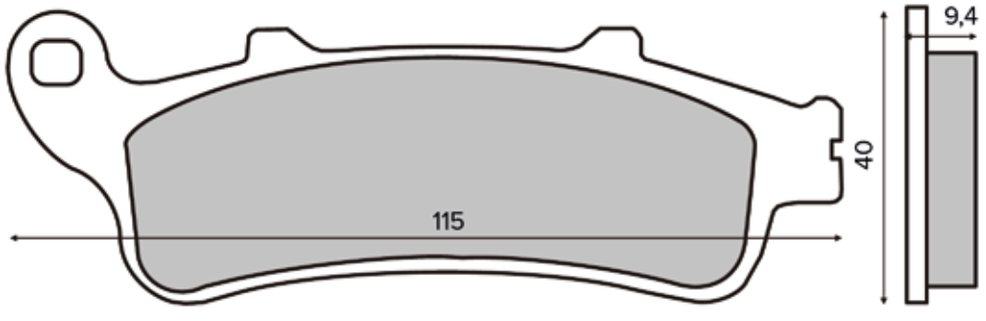

SINTER HIGH PERFORMANCE BRAKES

225100350

225100353

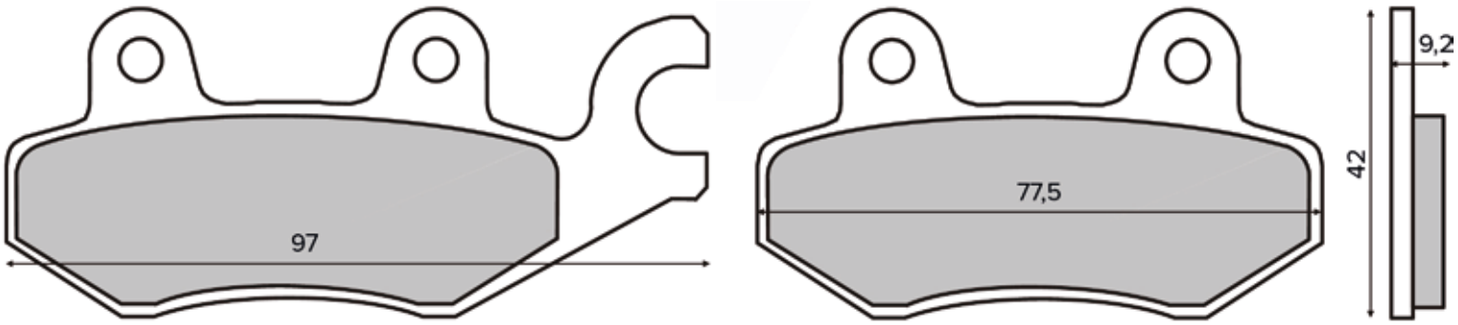

SINTER HIGH PERFORMANCE BRAKES

225100360

225100363

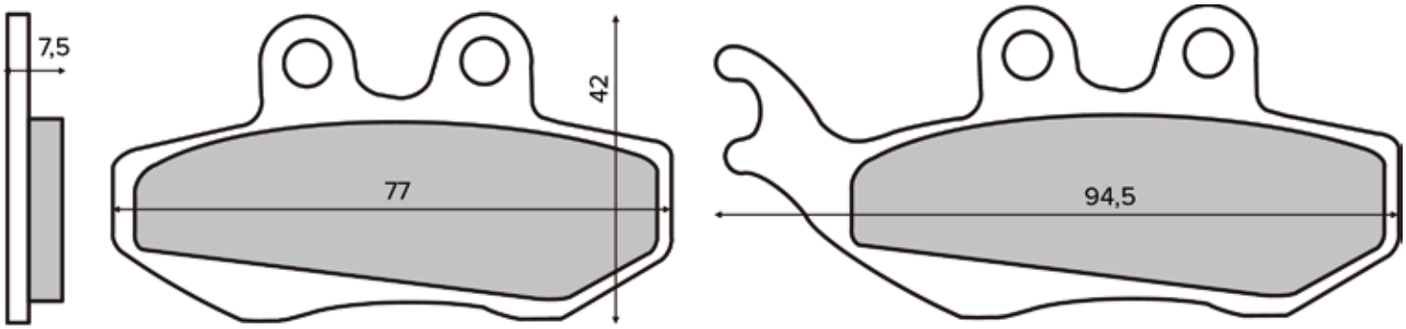

SINTER HIGH PERFORMANCE BRAKES

225100380

225100383

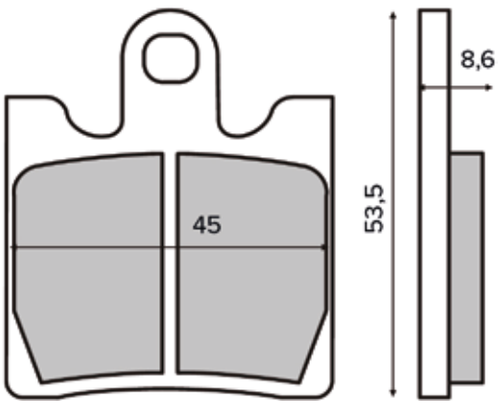

225100400	
225100403	

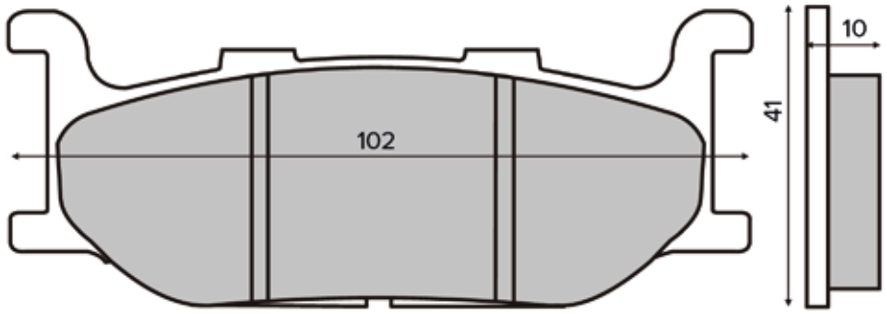

225100410	
225100413	

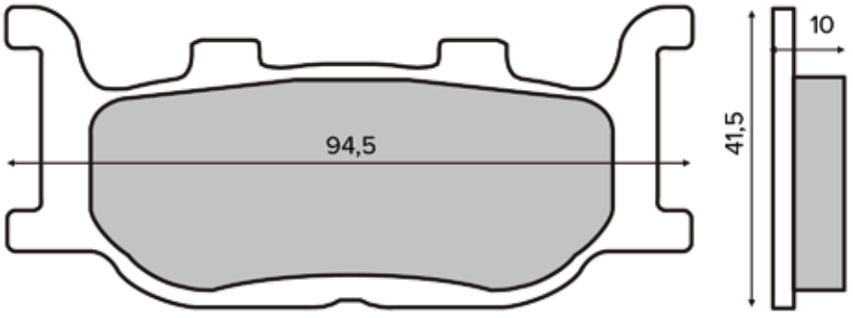

225100430	

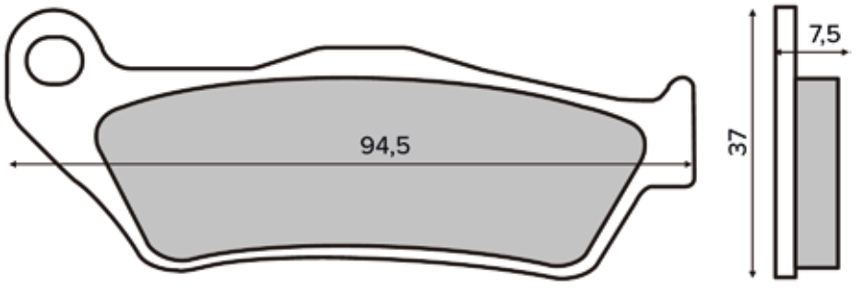

225100450

SINTER HIGH PERFORMANCE BRAKES **225100453**

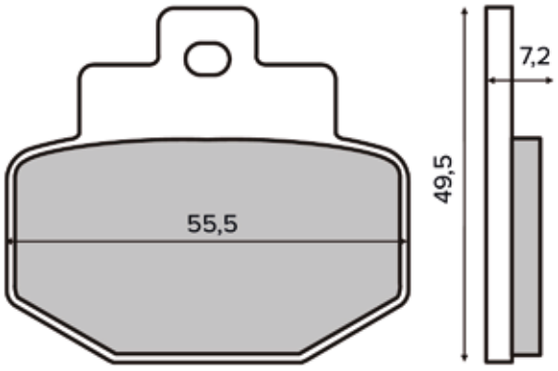

225100460

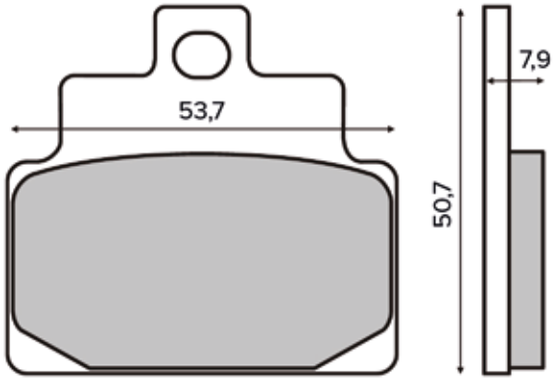

225100490

SINTER HIGH PERFORMANCE BRAKES **225100493**

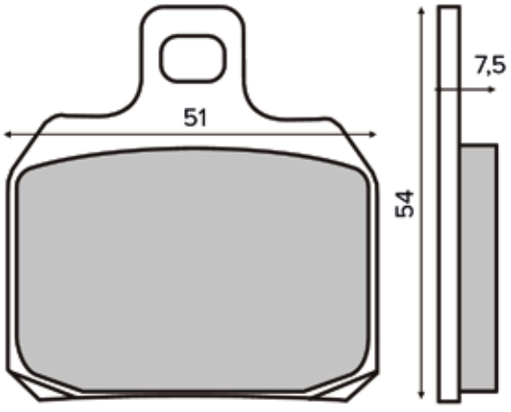

225100500

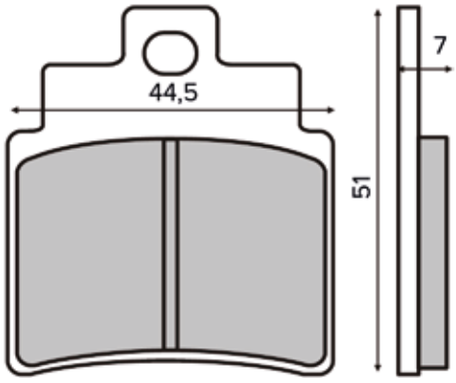

225100510

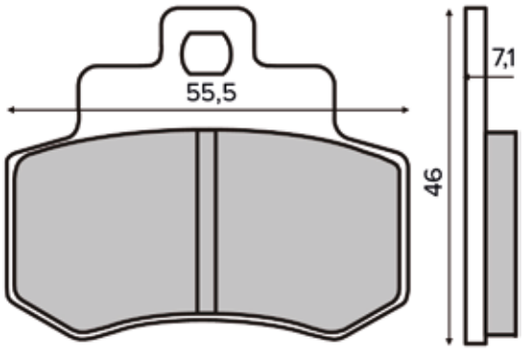

225100520

SINTER HIGH PERFORMANCE BRAKES

225100523

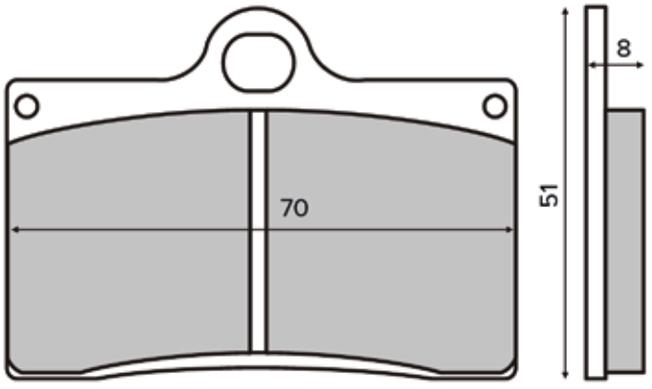

225100530

SINTER HIGH PERFORMANCE BRAKES

225100533

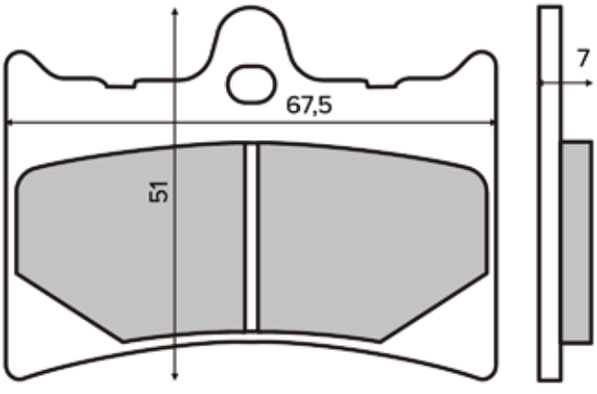

225100540

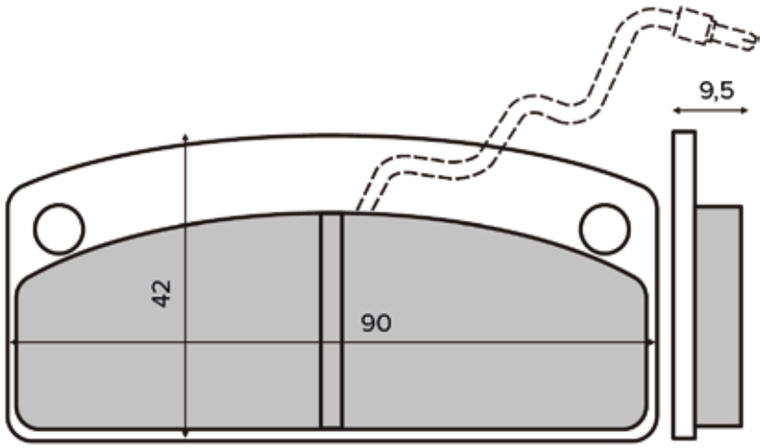

225100560

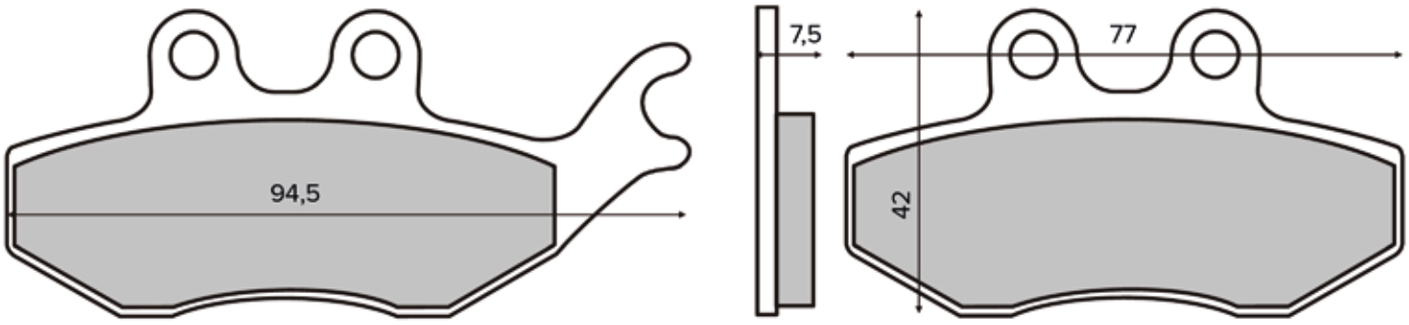

225100580

225100583

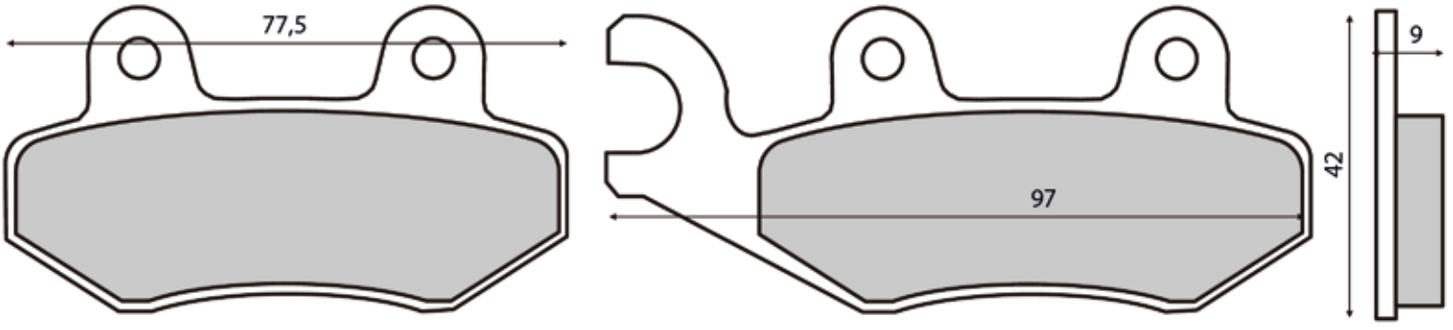

225100630

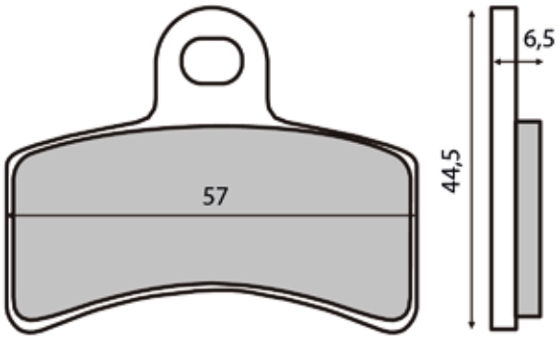

225100640

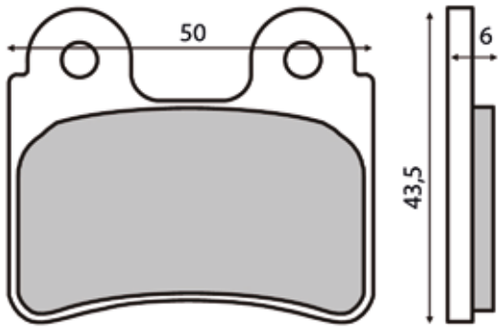

225100650

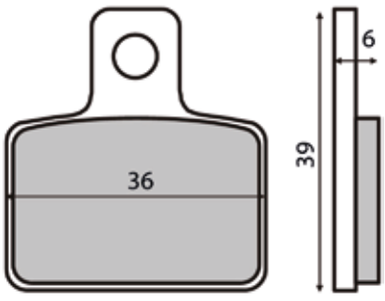

225100660

225100663

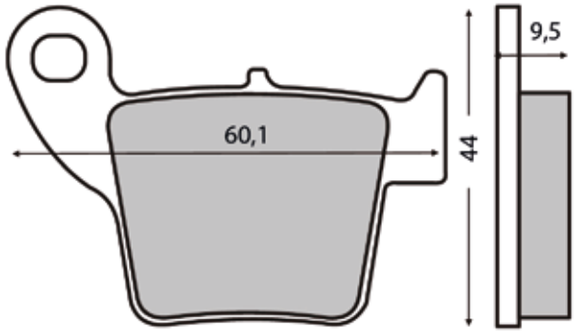

225100670

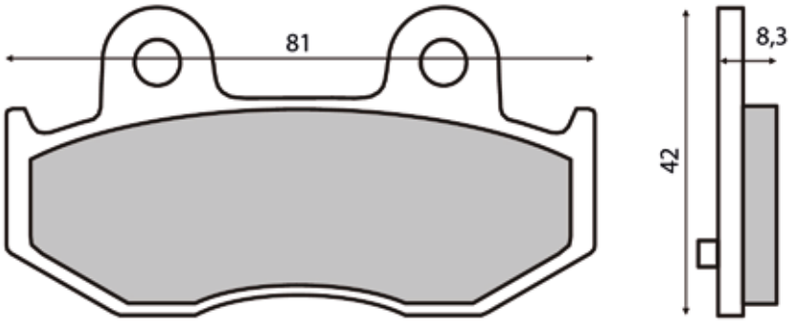

225100680

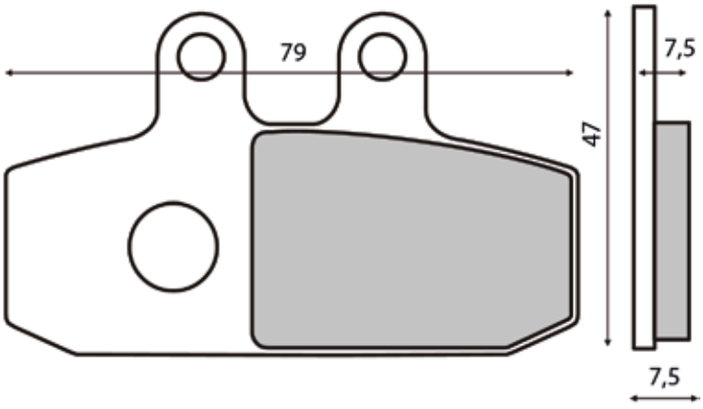

225100690

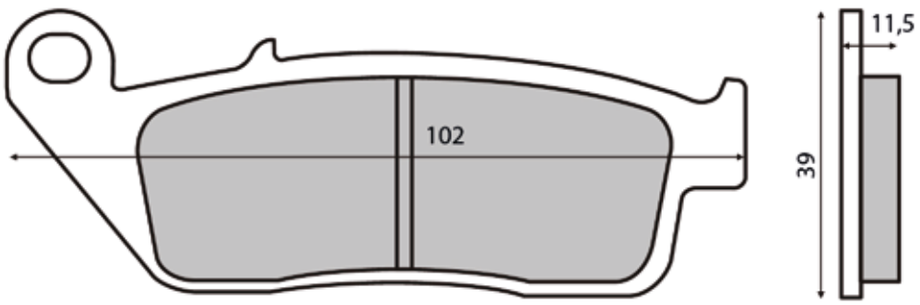

225100720

225100723

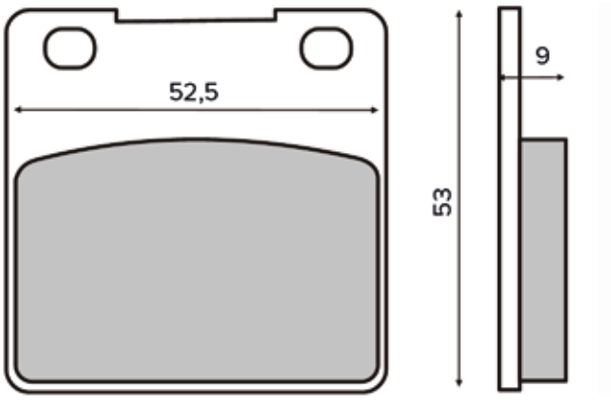

225100730

225100733

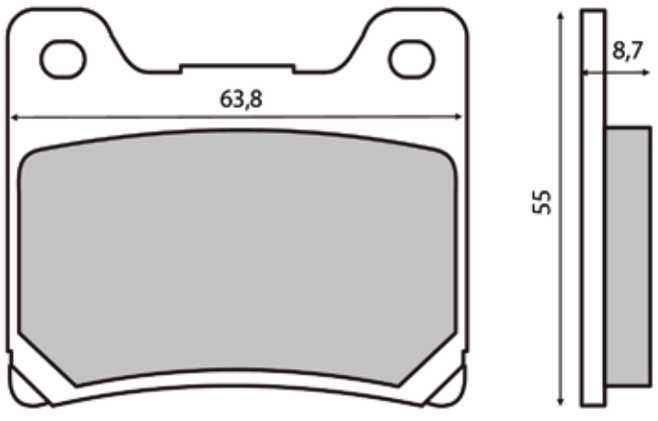

225100740

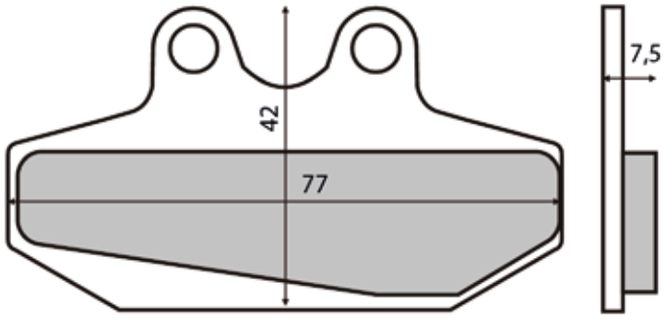

225100750

225100753

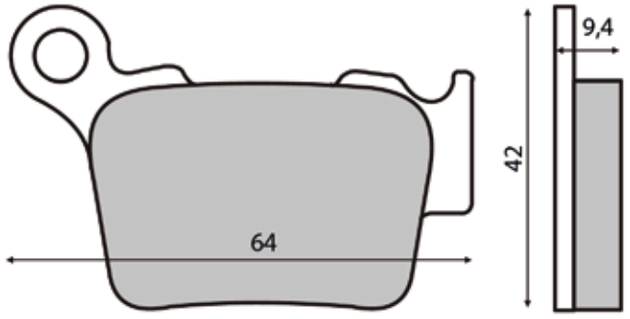

225100770

225100773

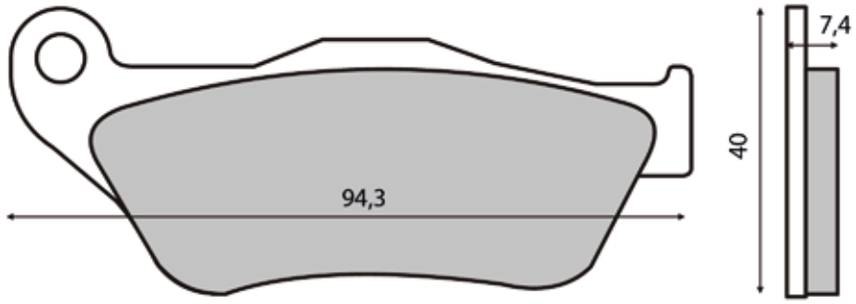

225100780

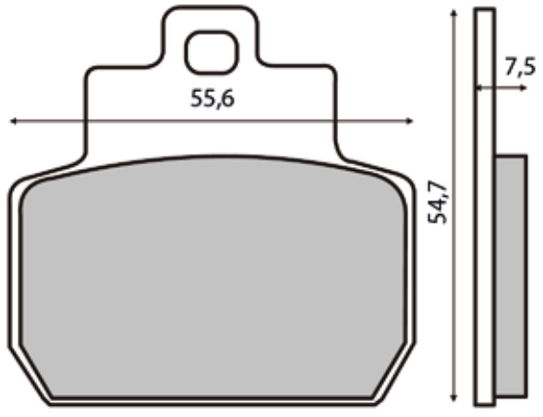

225100800

225100803

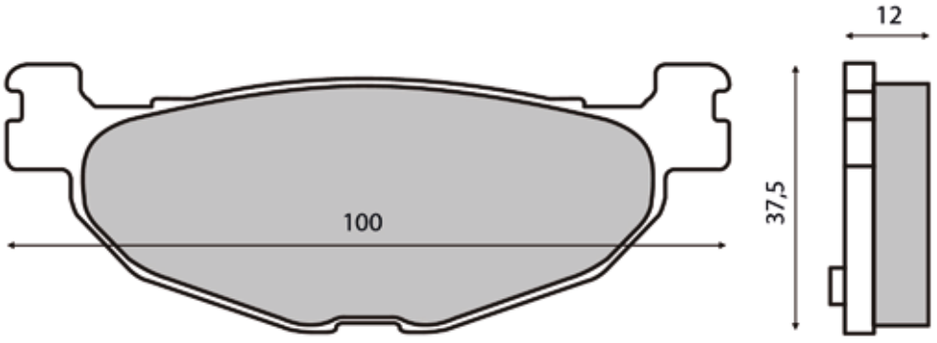

225100870

225100873

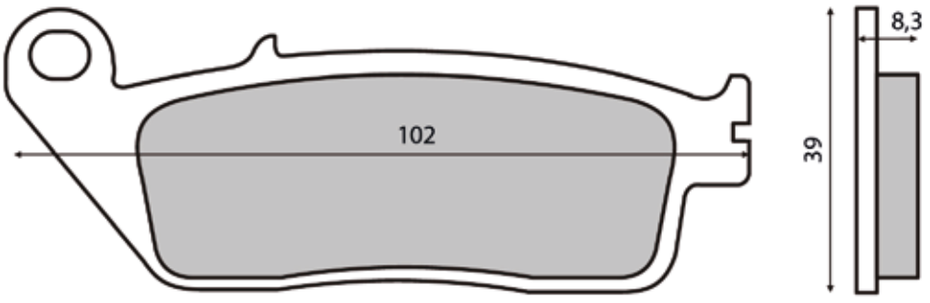

225100890

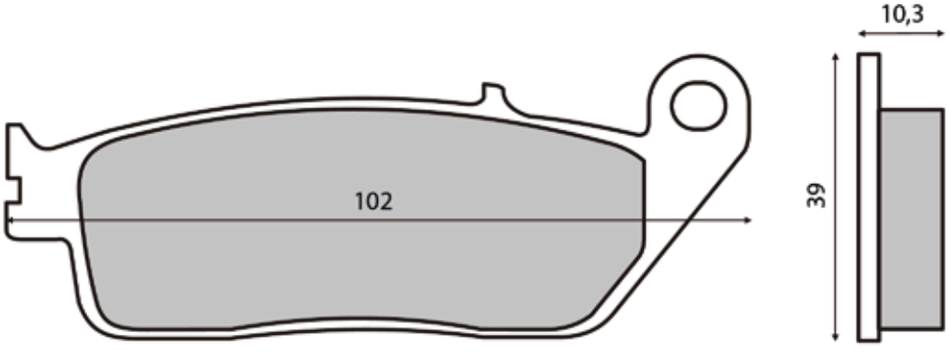

225100920

225100923

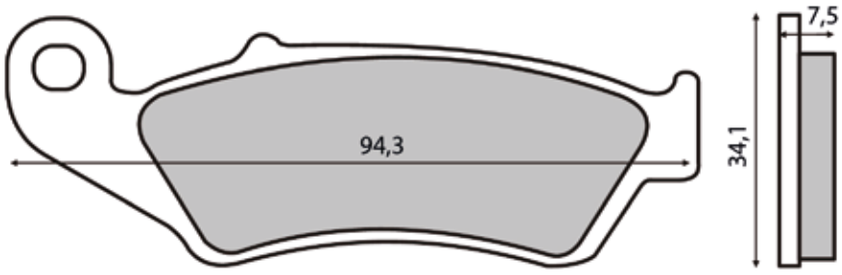

225100930

225100933

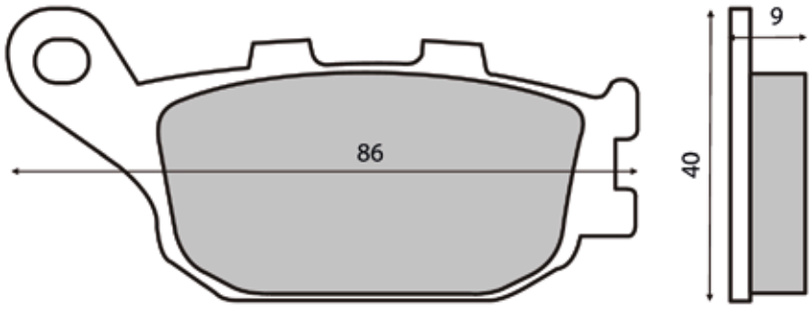

225100970

225100973

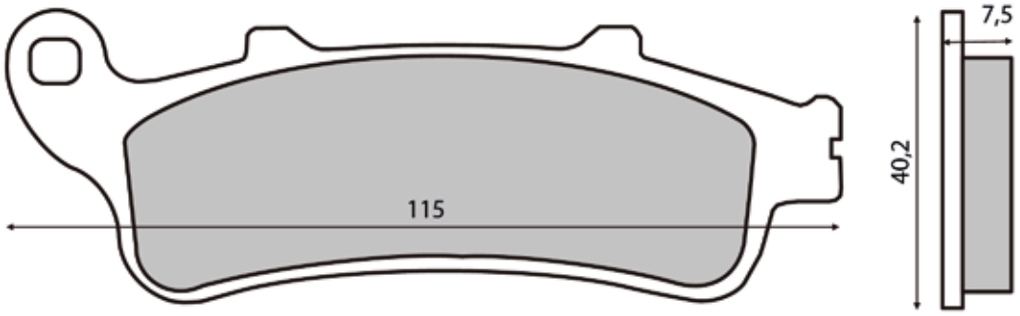

225101010

225101013

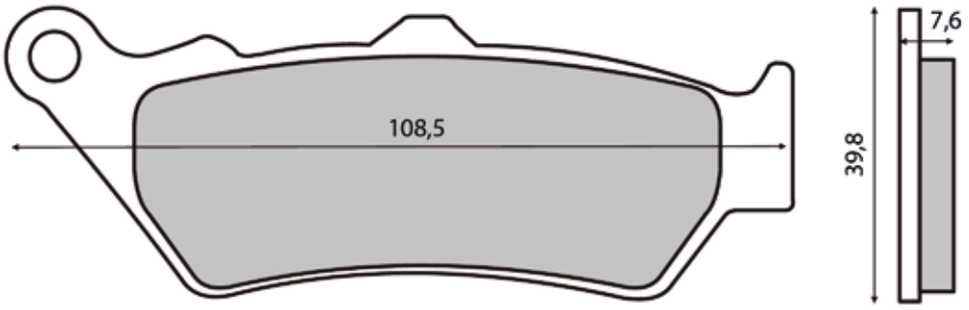

225101060

225101063

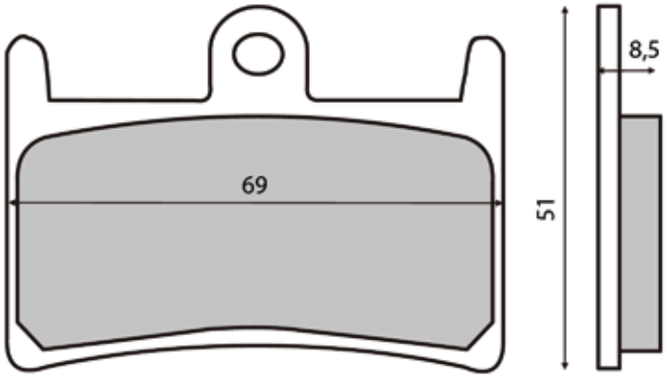

225101070

225101073

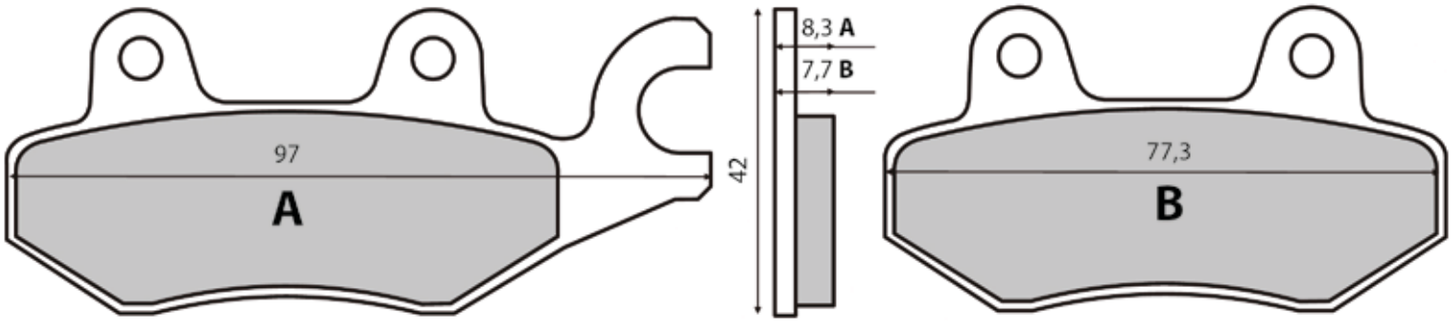

225101100

225101103

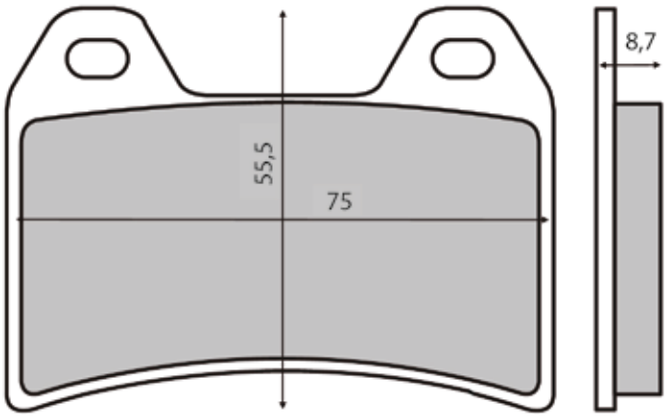

225101150

225101153

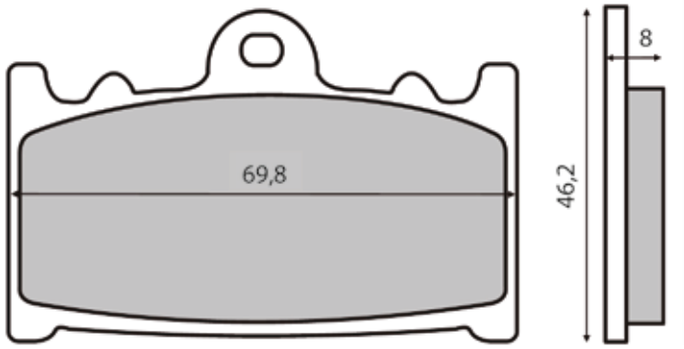

225101170

225101173

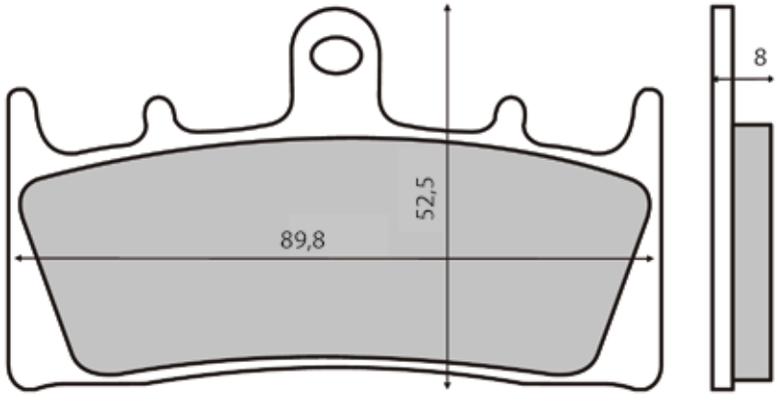

225101190

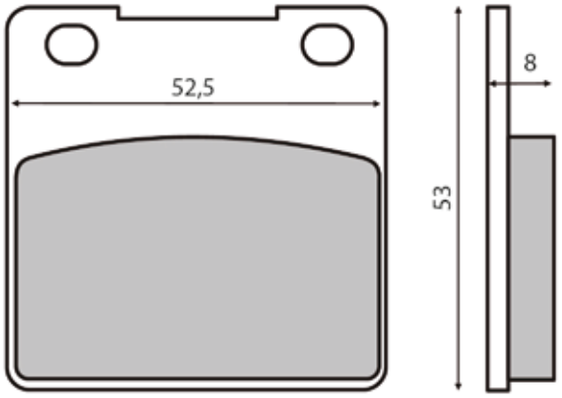

225101200

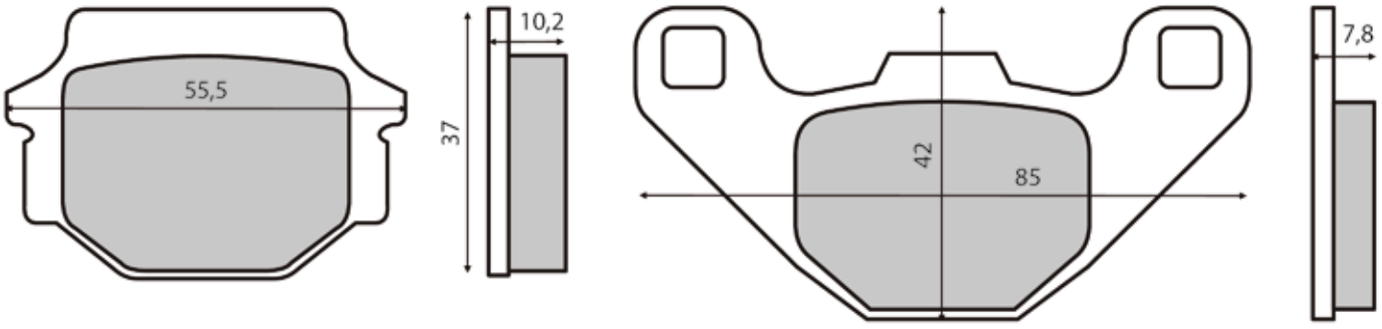

225101220

225101223

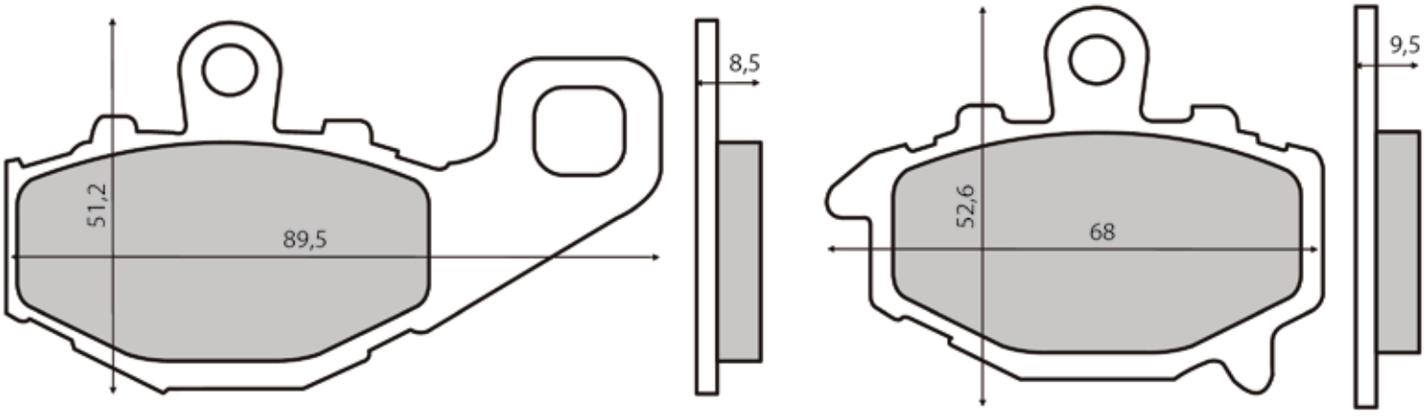

225101240	
225101243	

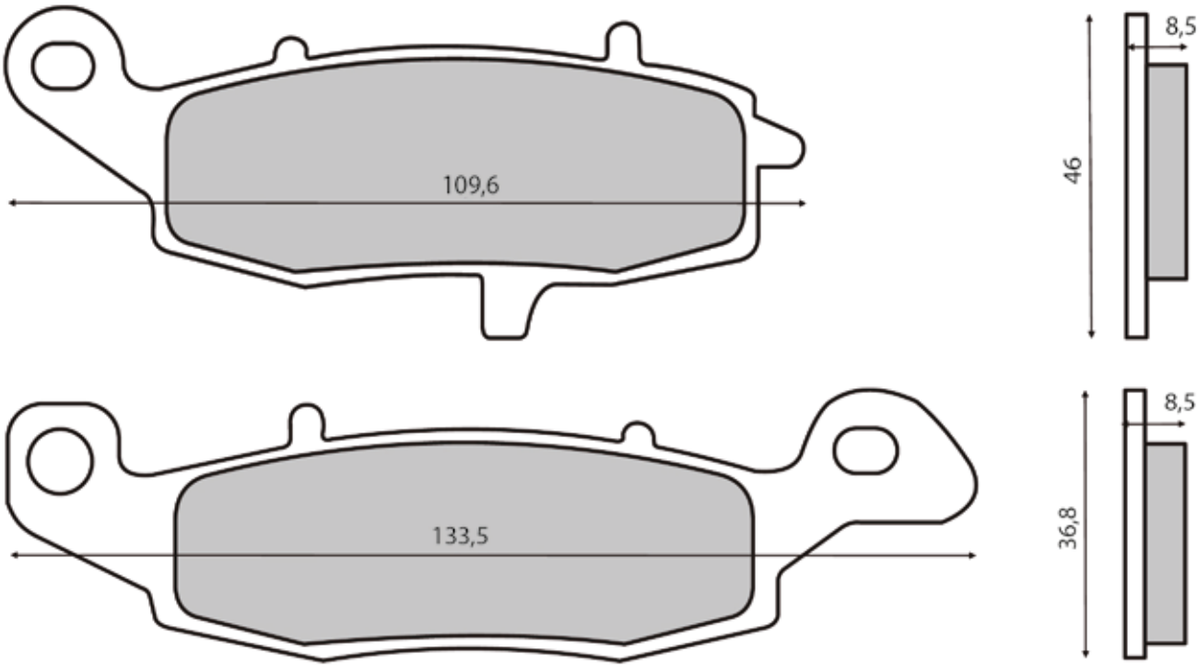

225101250	
225101253	

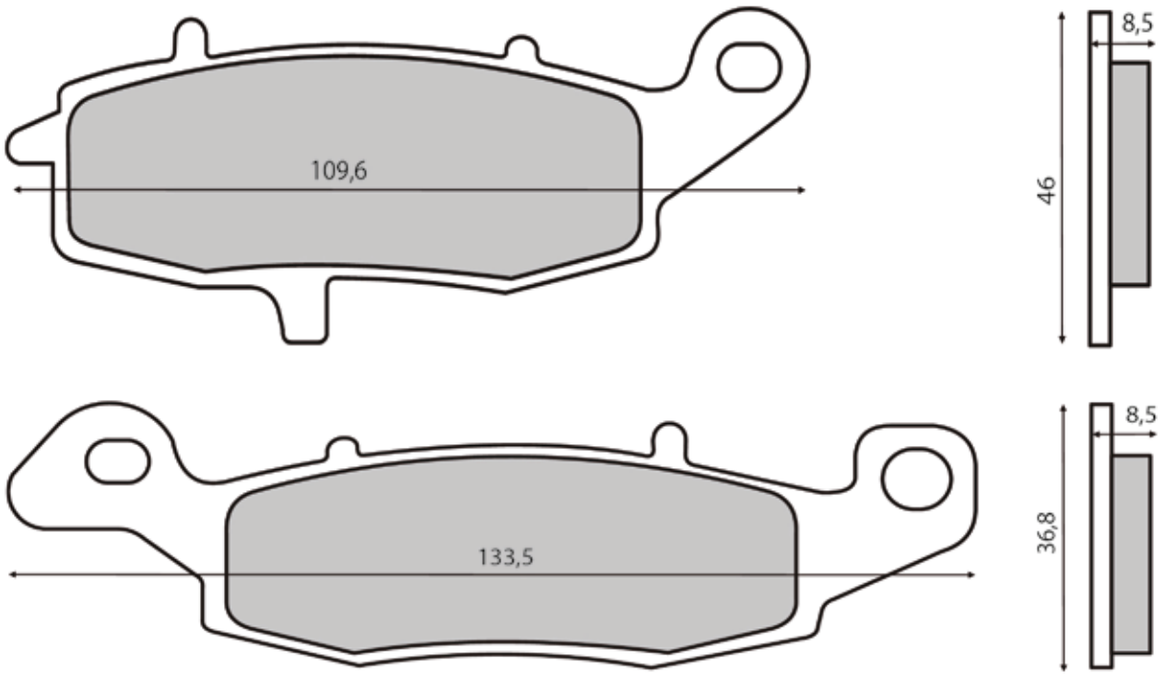

225101330	
225101333	

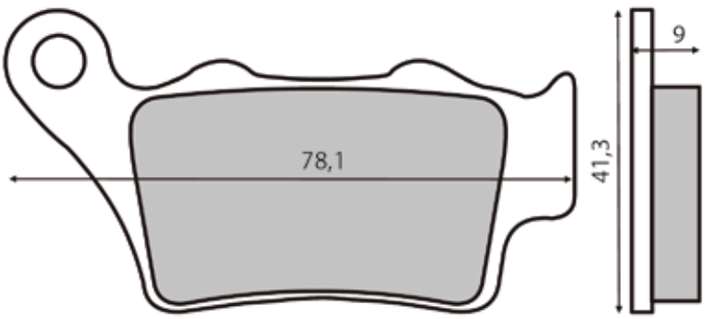

225101380	
225101383	

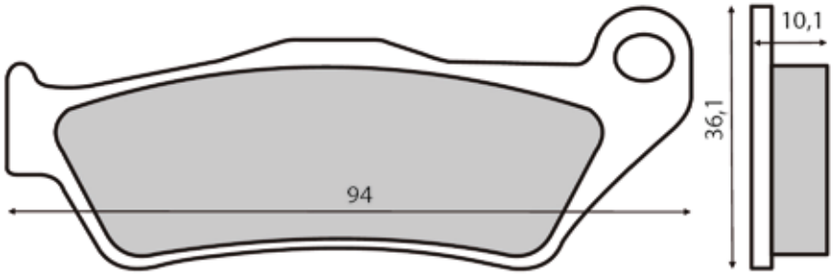

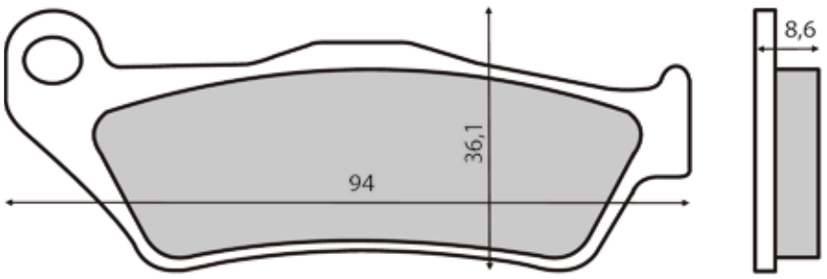

225101400

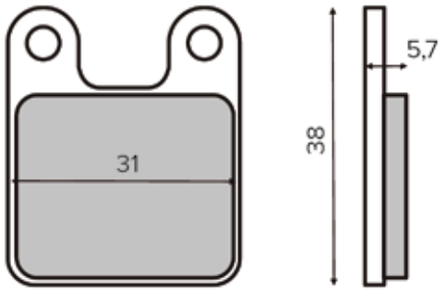

225101410

225101413

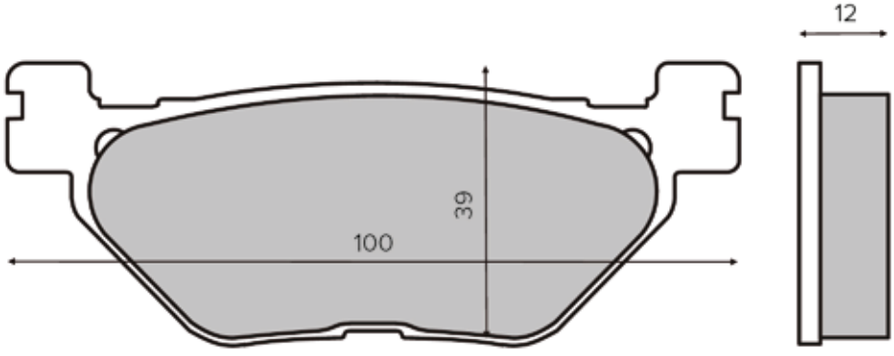

225101420

225101423

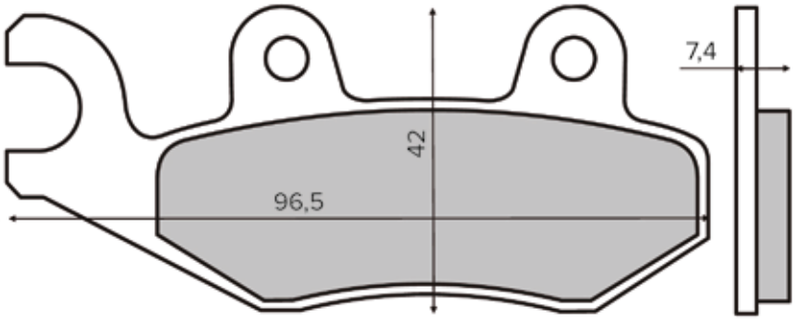

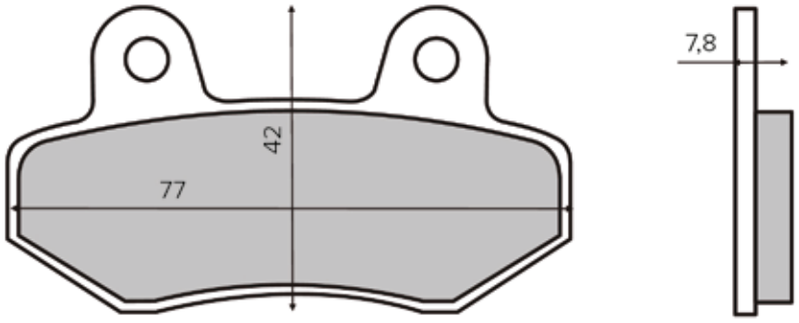

225101440

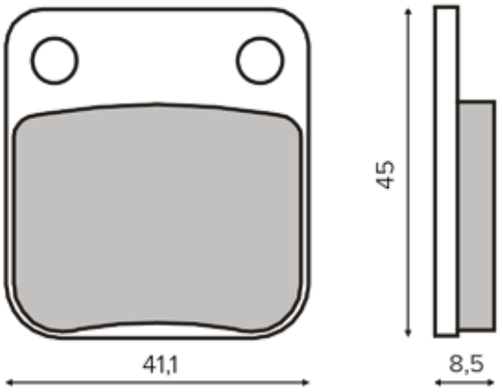

225101450

225101453

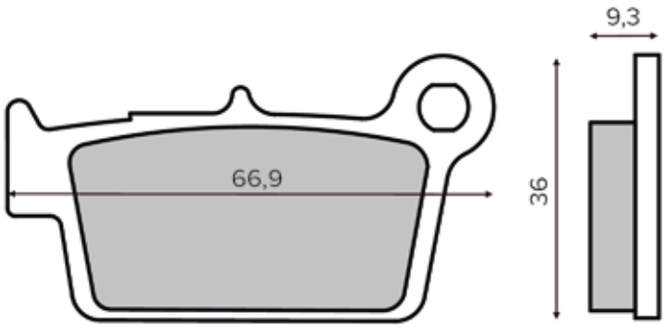

225101490	
225101493	

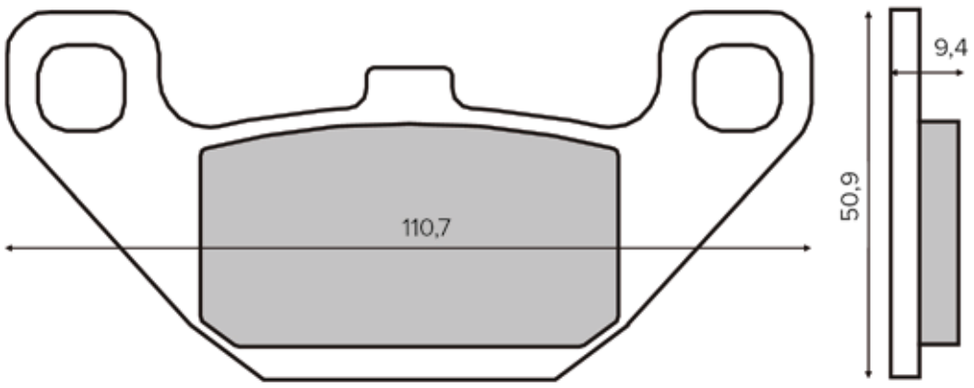

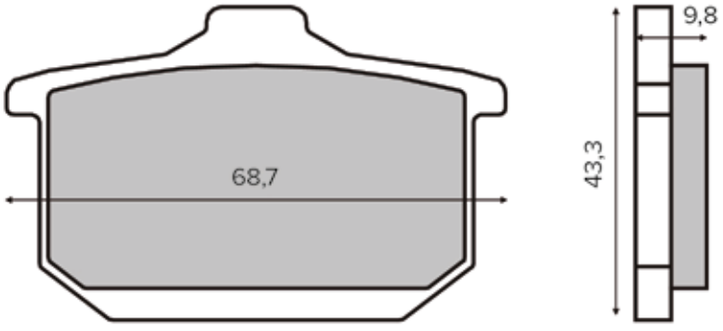

225101500	
225101503	

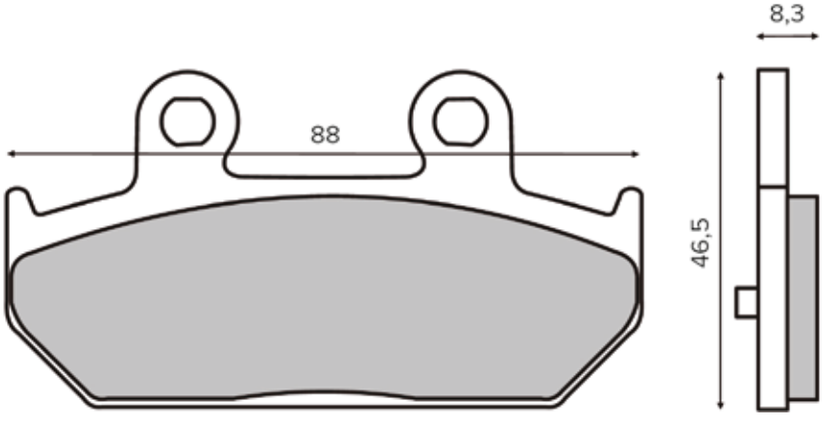

SINTER HIGH PERFORMANCE BRAKES

225101603

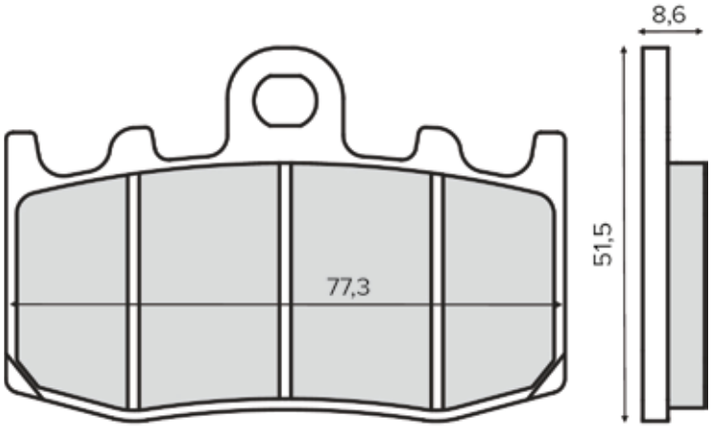

225101620

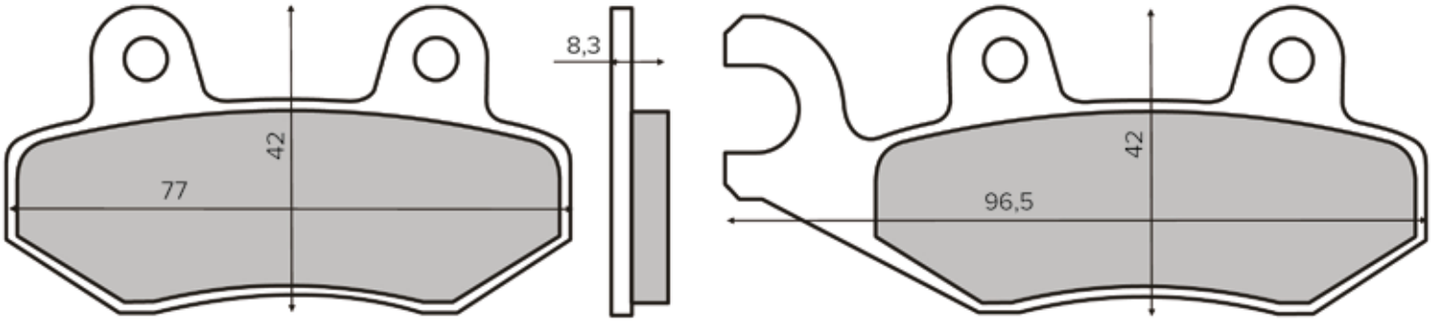

225101790

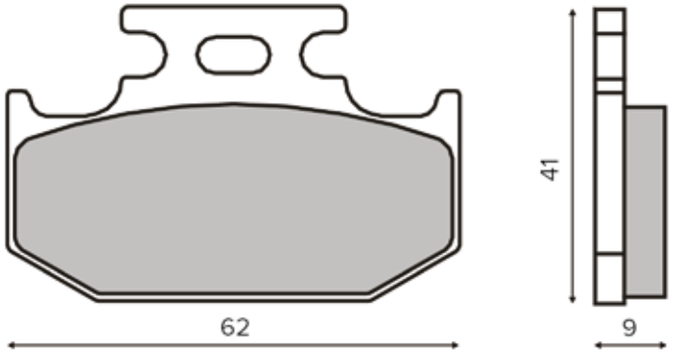

225102020

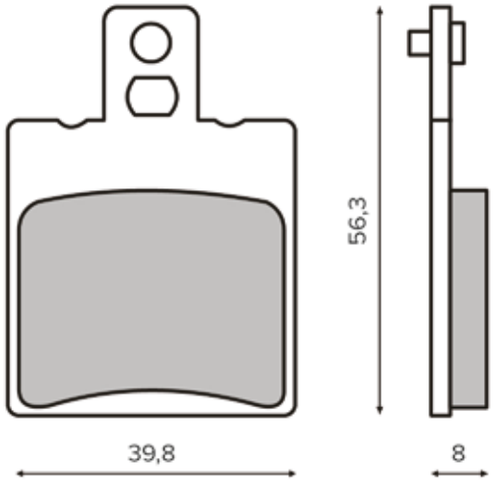

225102120

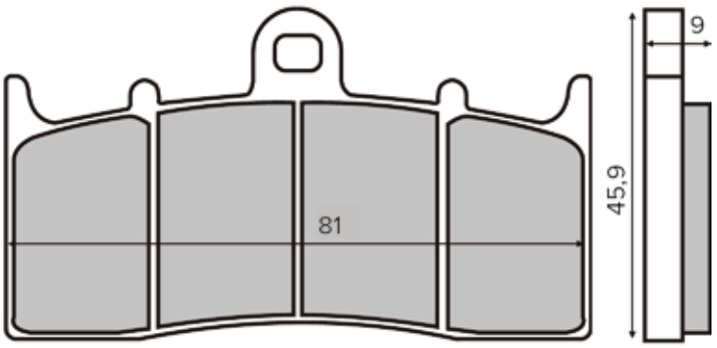

225102530

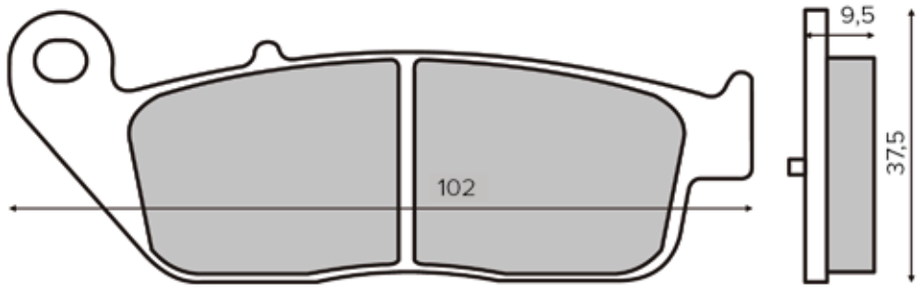

225102540

225102543

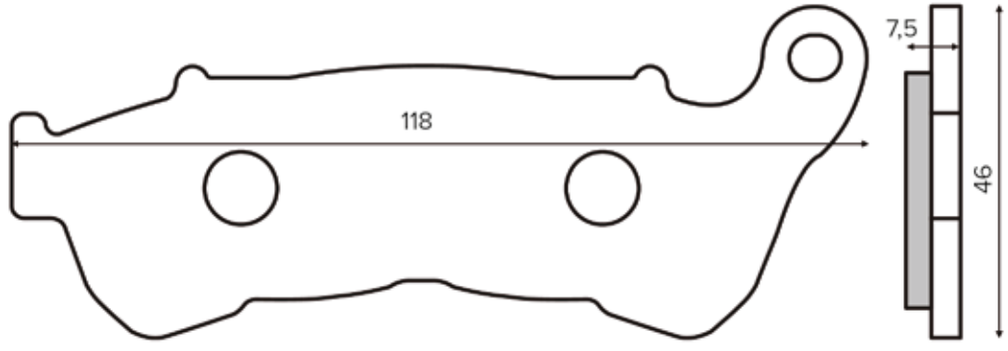

225102550

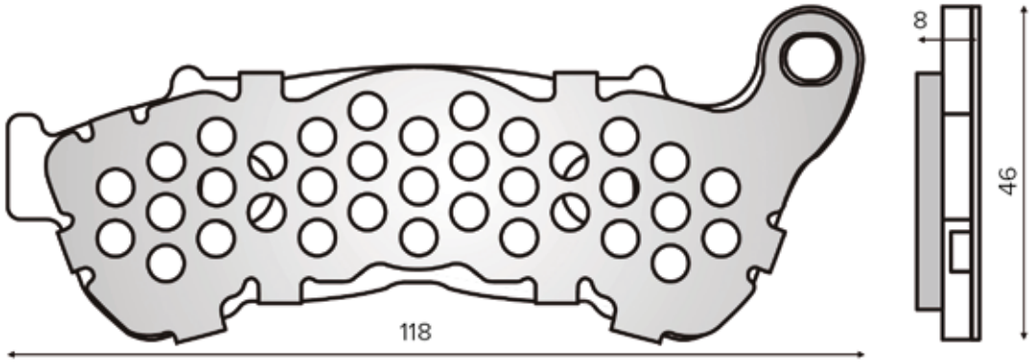

225102560

225102563

225102570

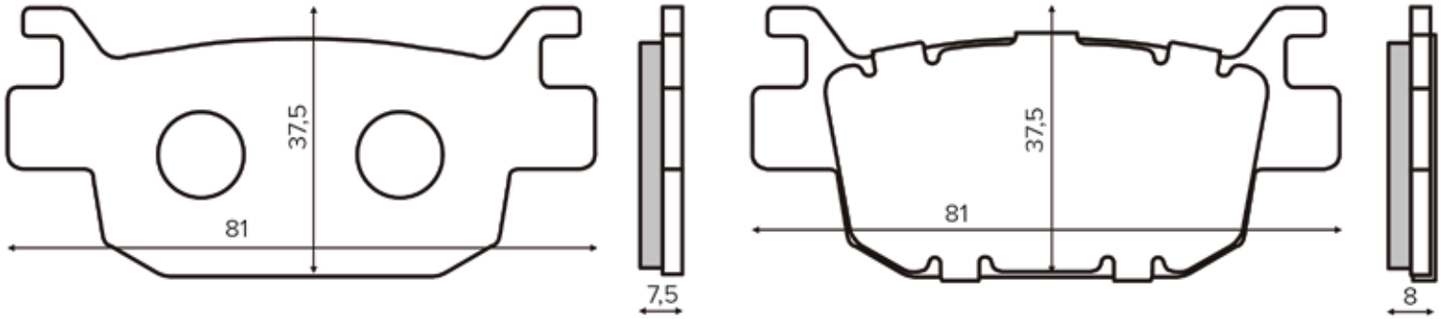

225102590

225102593

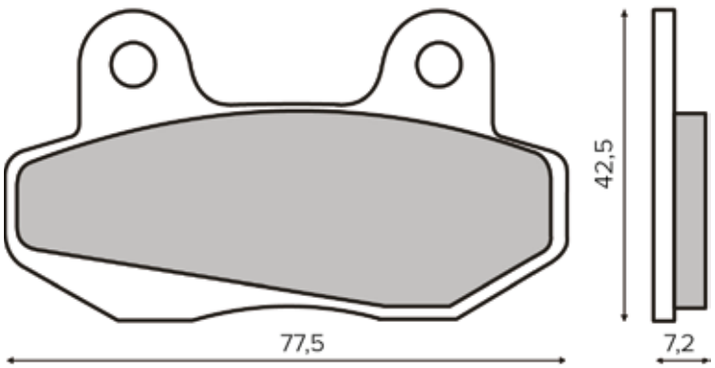

225102600

225102603

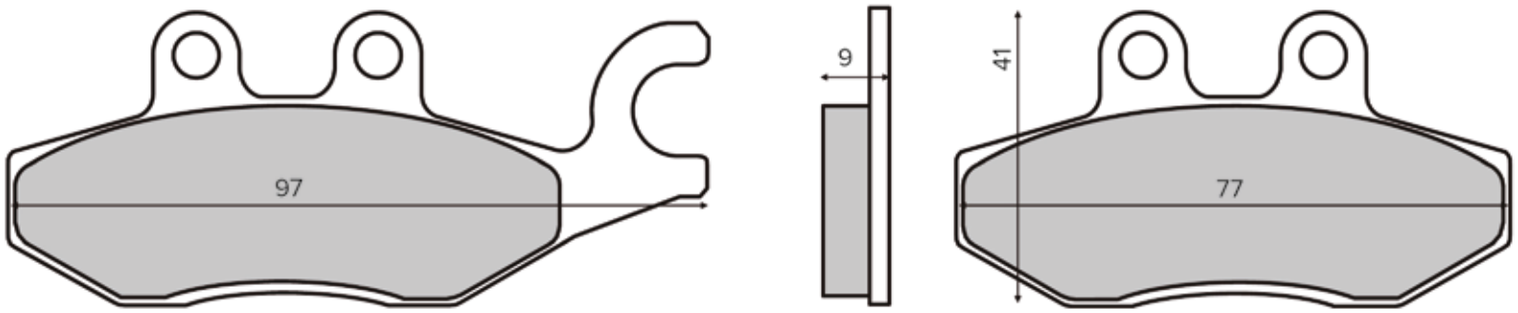

225102610

225102613

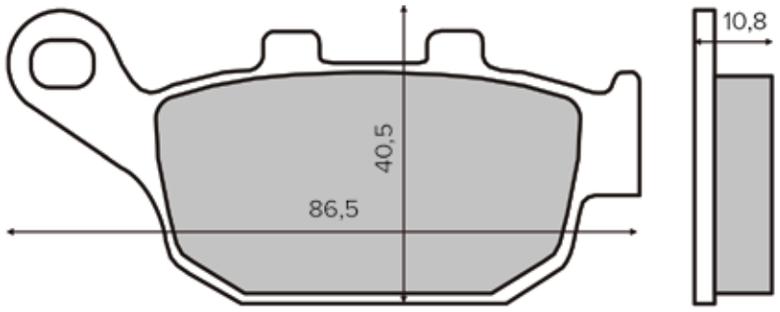

225102620

225102623

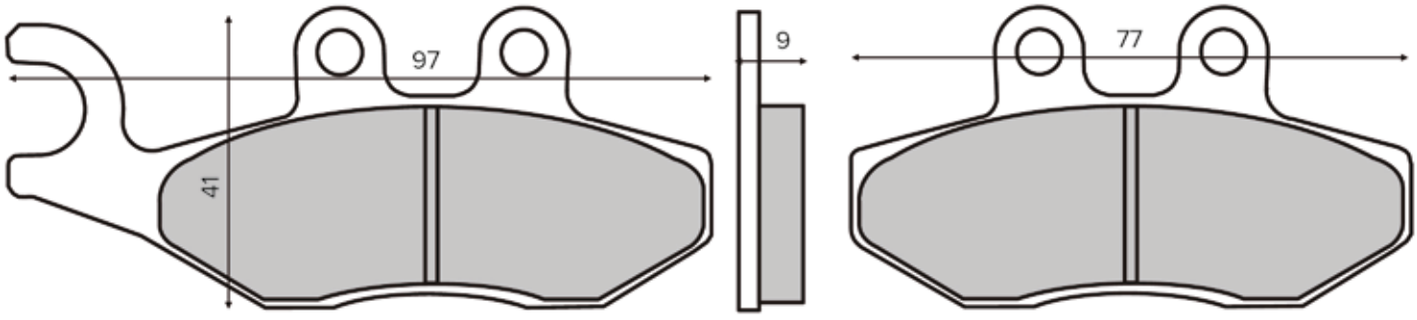

225102630

225102633

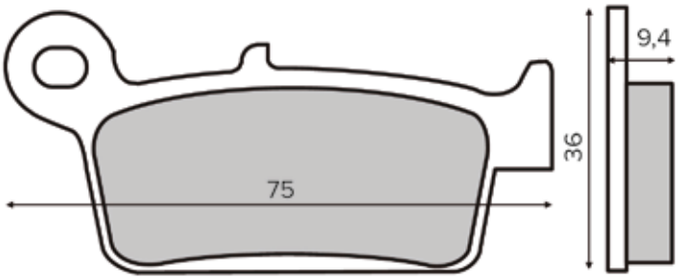

225102640

225102643

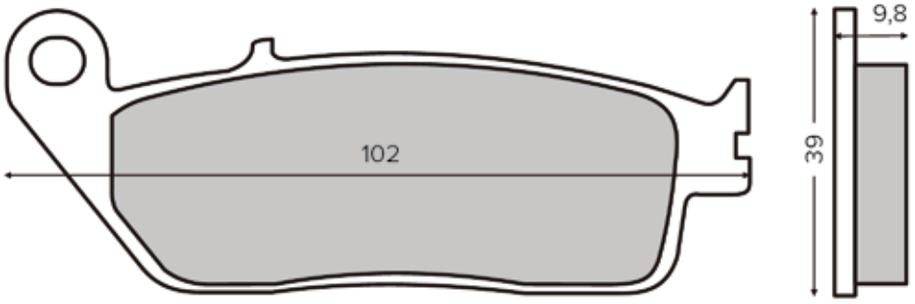

225102650

225102653

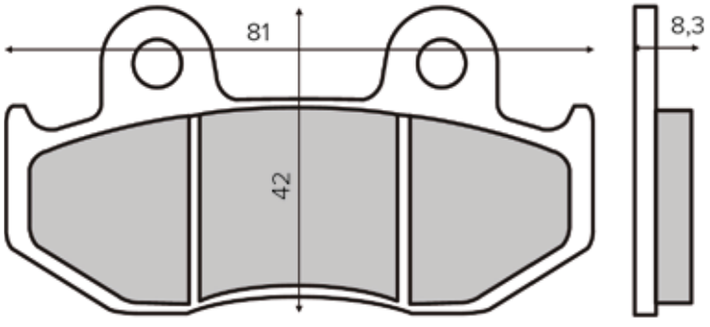

225102660

225102663

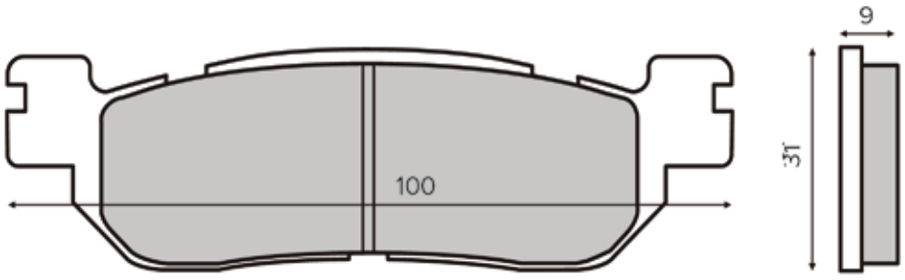

225102670

225102673

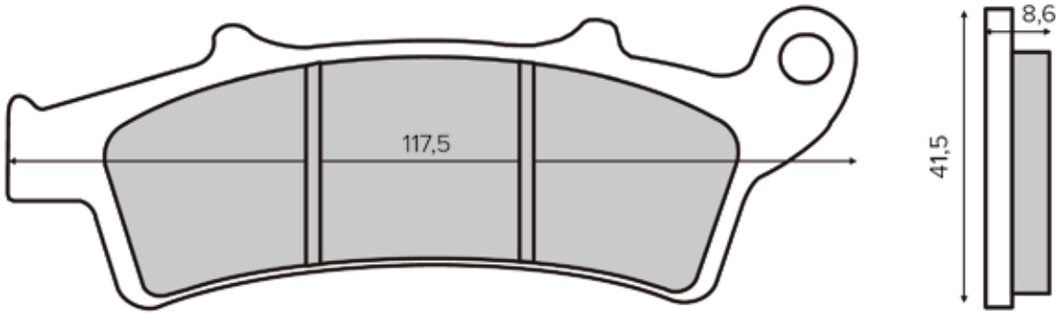

225102710

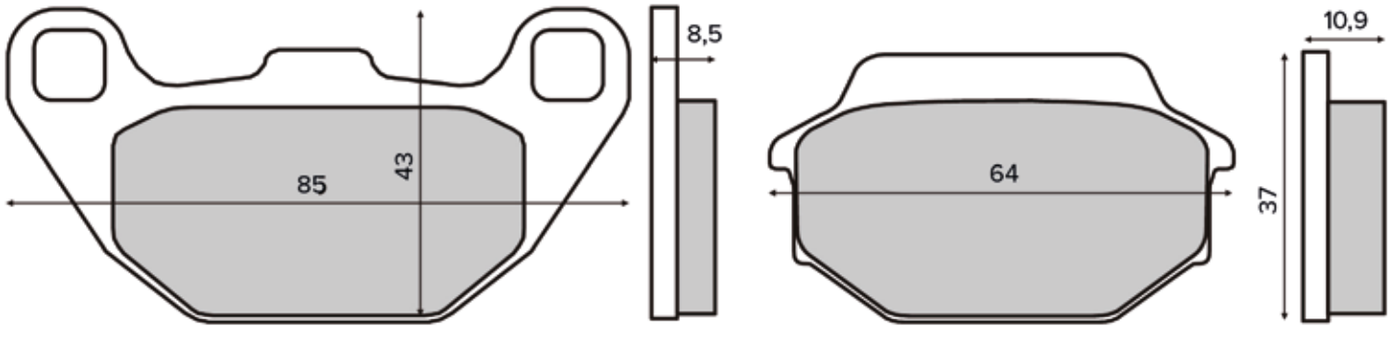

225102720

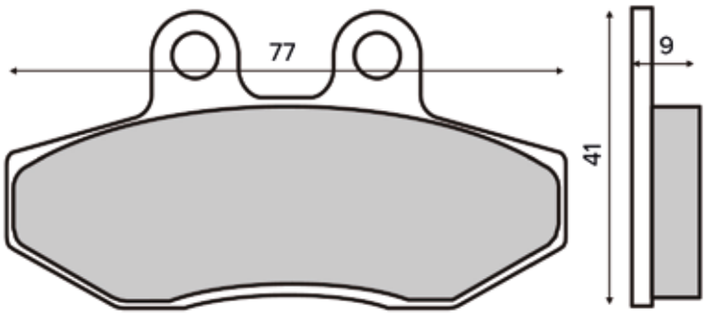

225102730

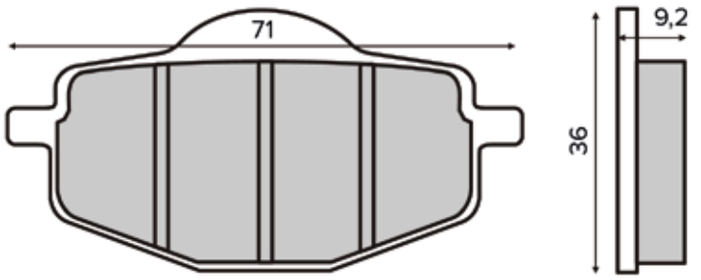

225102740

225102743

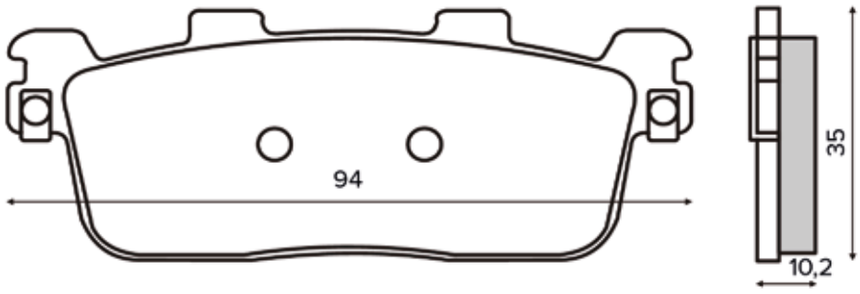

225102750

225102753

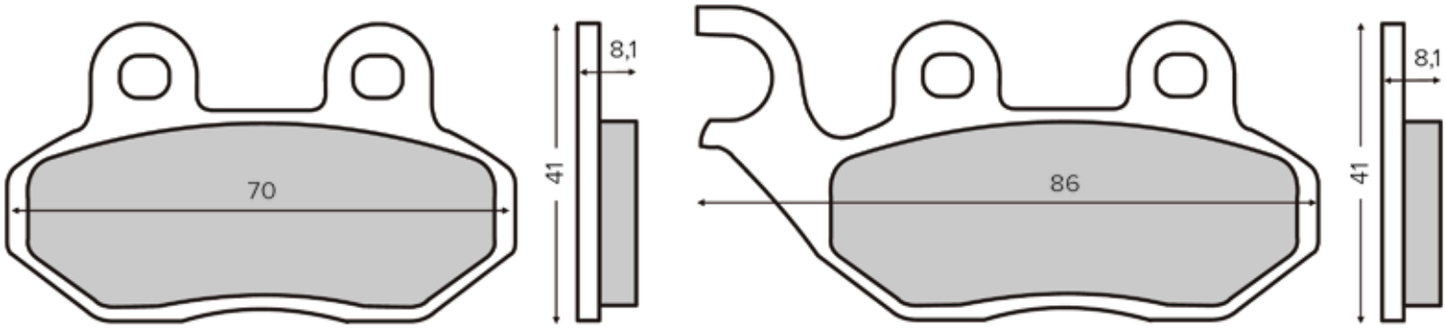

225102760

SINTER HIGH PERFORMANCE BRAKES

225102763

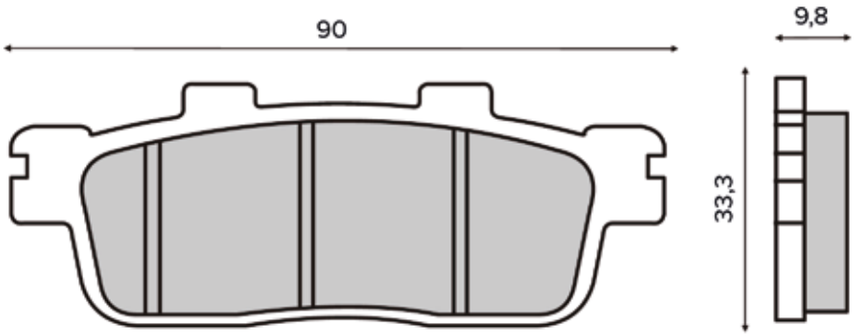

225102780

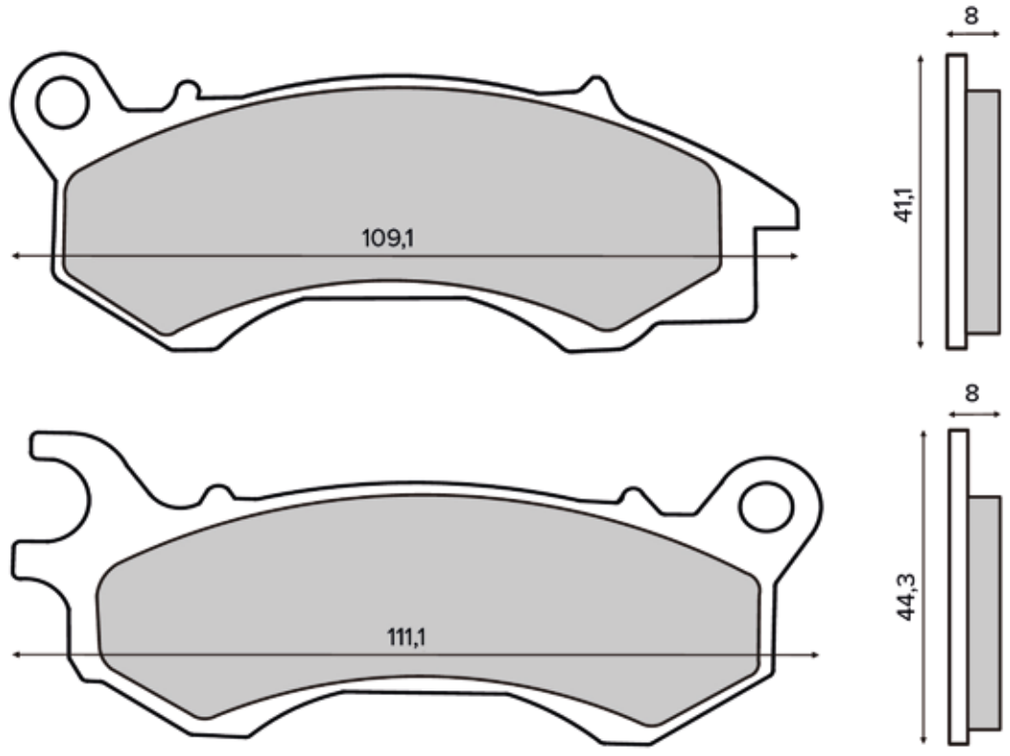

225102800

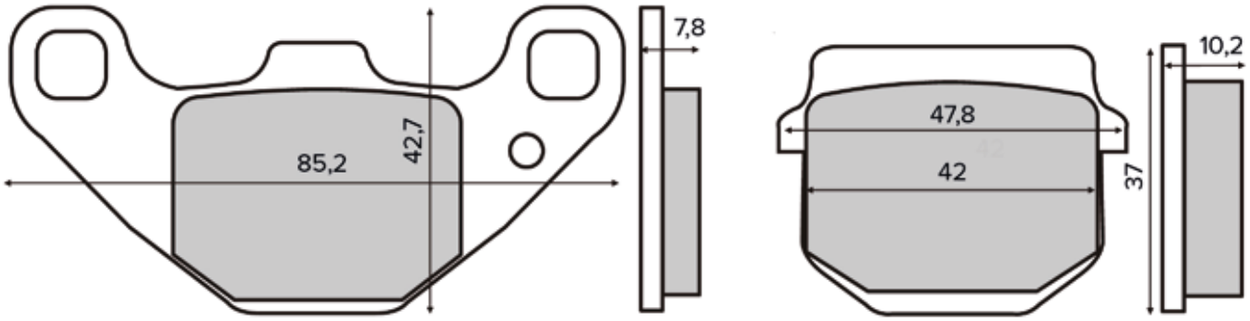

225102810

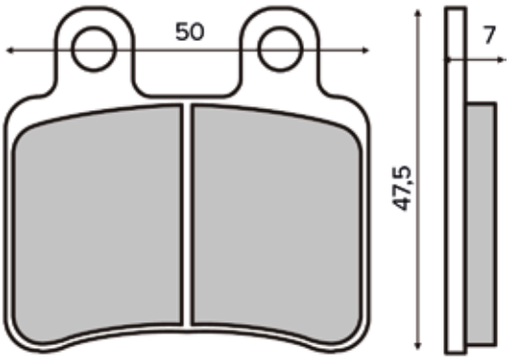

225102820	
225102823	

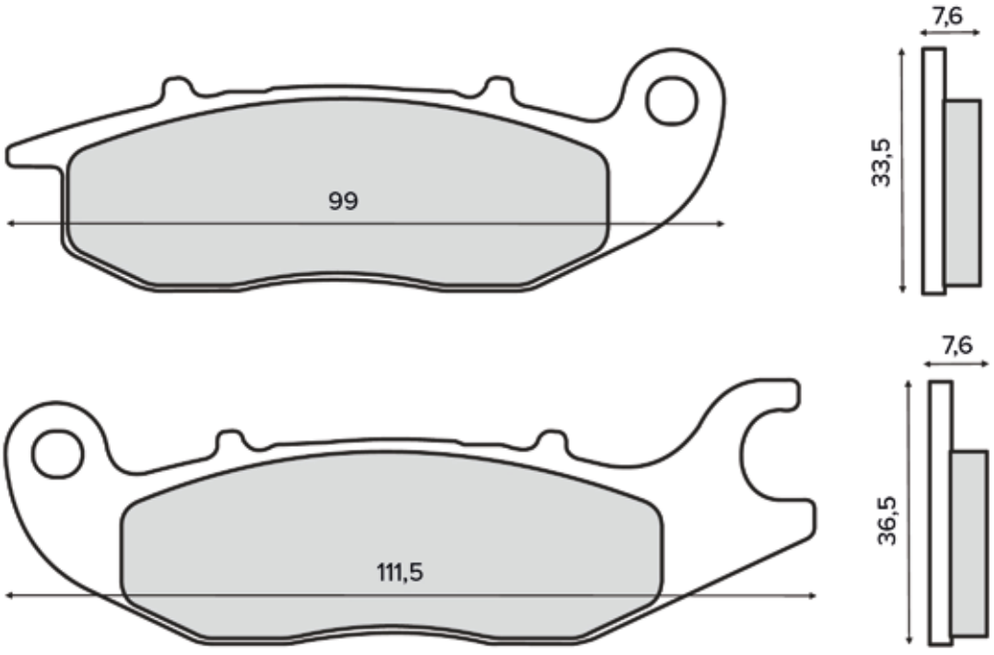

225102830	
225102833	

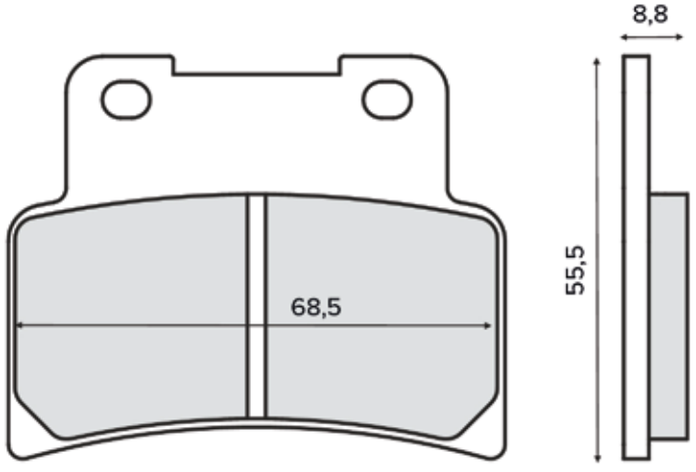

225102840	
225102843	

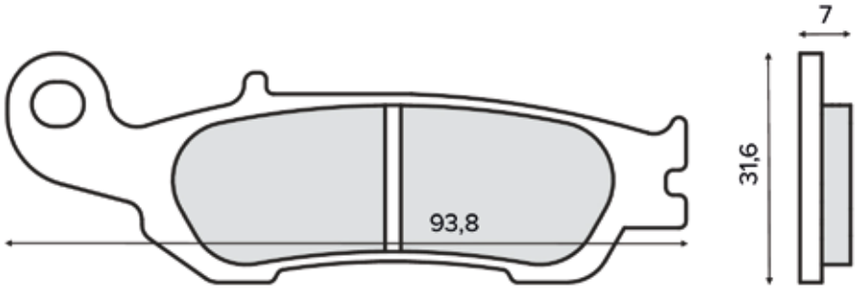

225102850	
225102853	

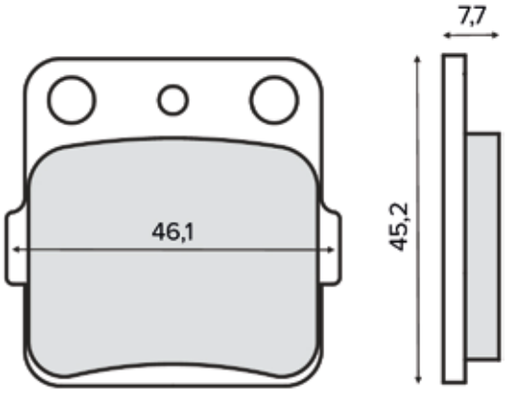

225102860	
225102863	

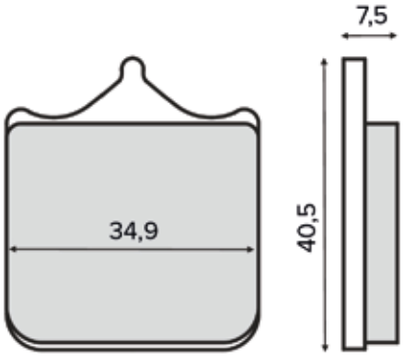

225102870	
225102873	

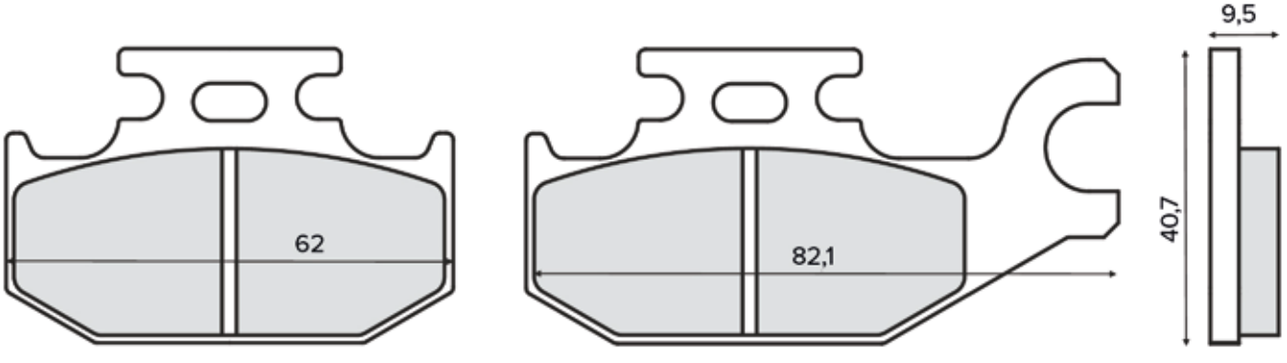

225102880

225102883

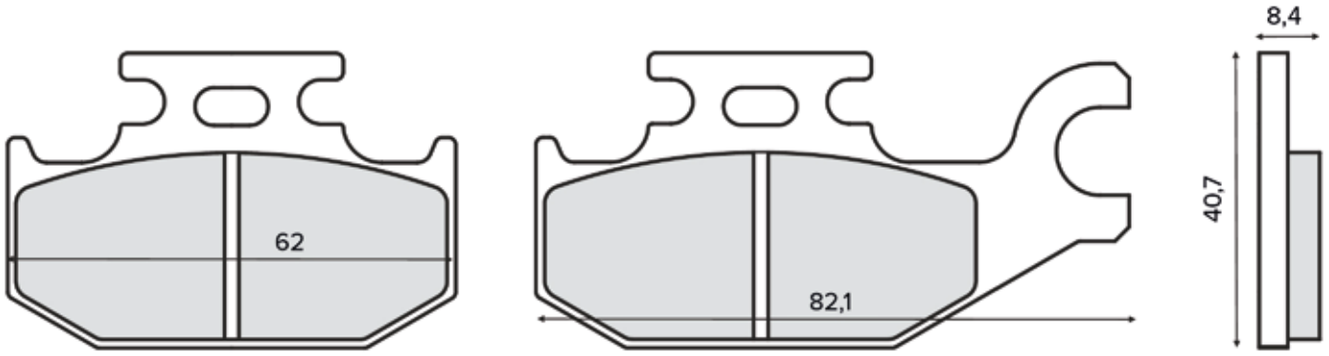

225102890

225102893

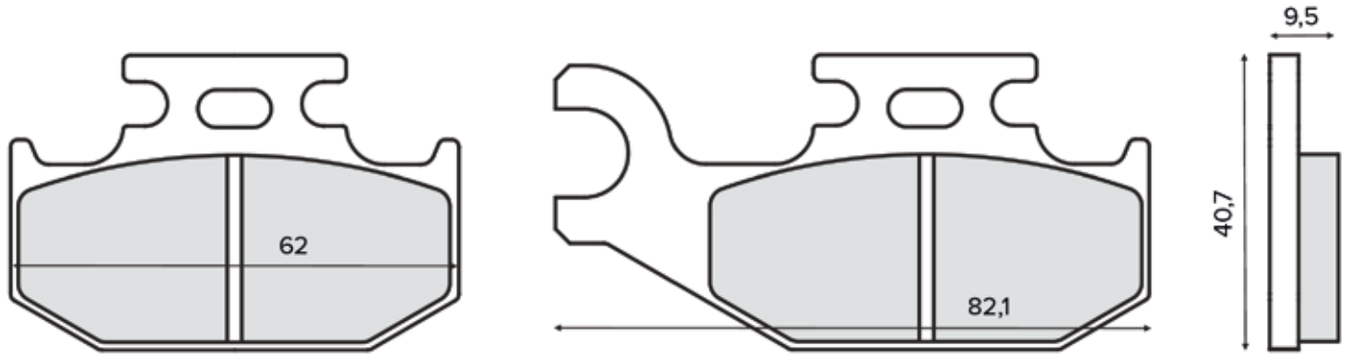

225102900

225102903

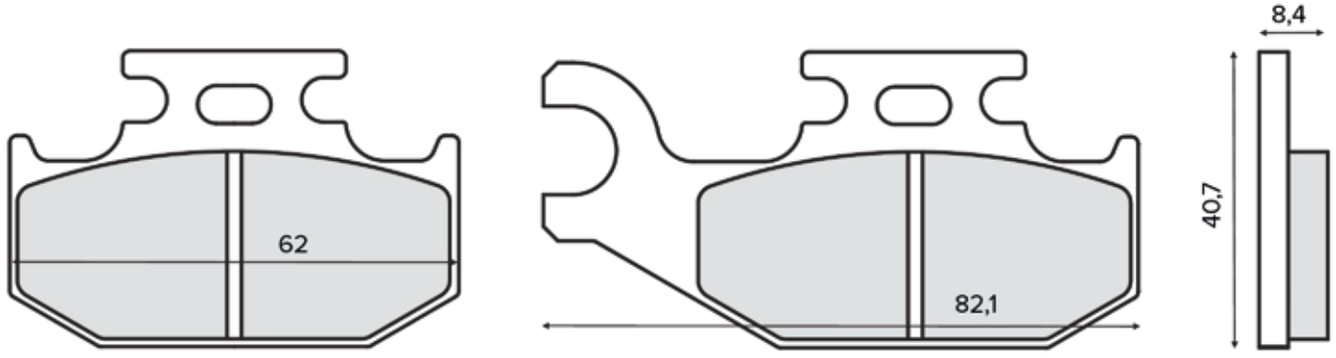

225102910

225102913

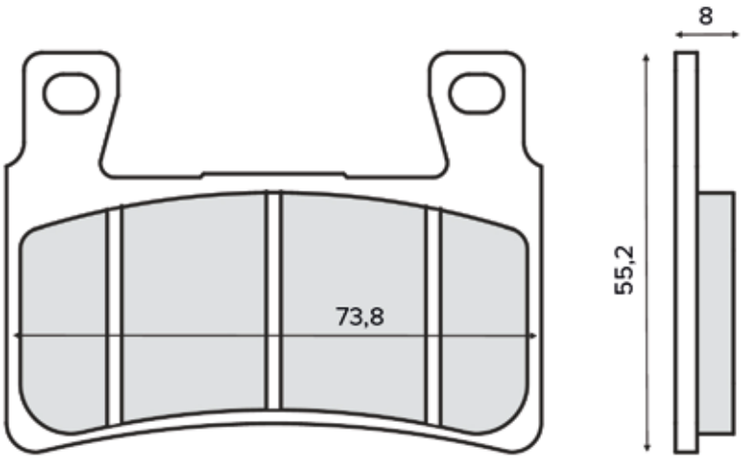

225102923

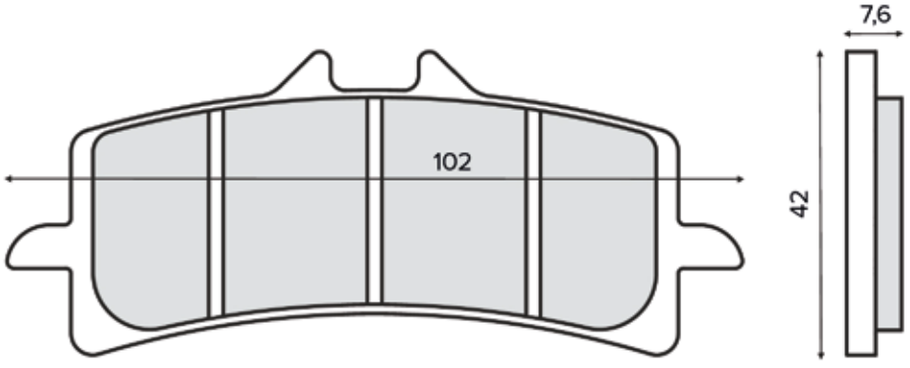

225102930

225102933

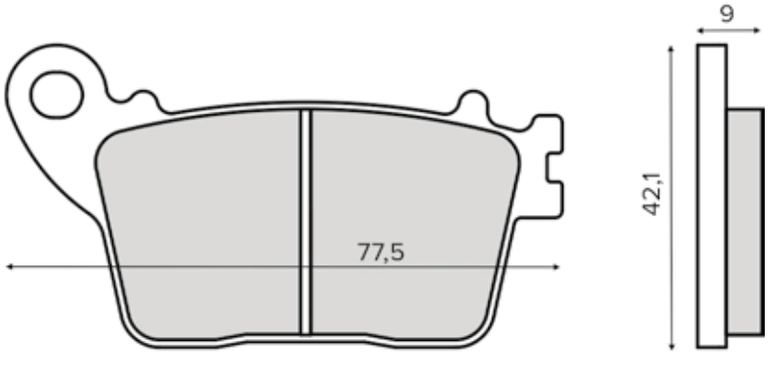

SINTER HIGH PERFORMANCE BRAKES

225102943

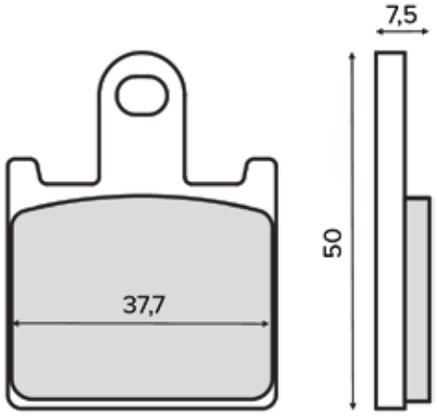

225102950

SINTER HIGH PERFORMANCE BRAKES

225102953

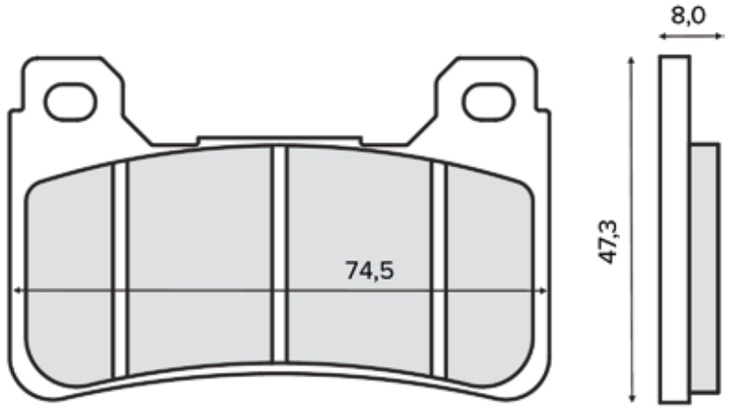

225102960

225102963

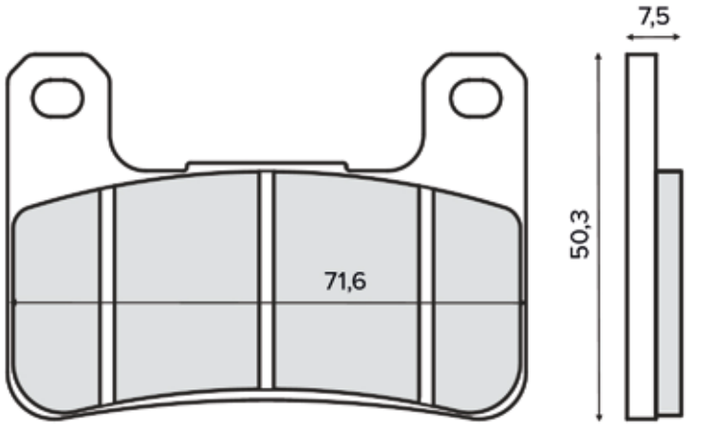

225102973

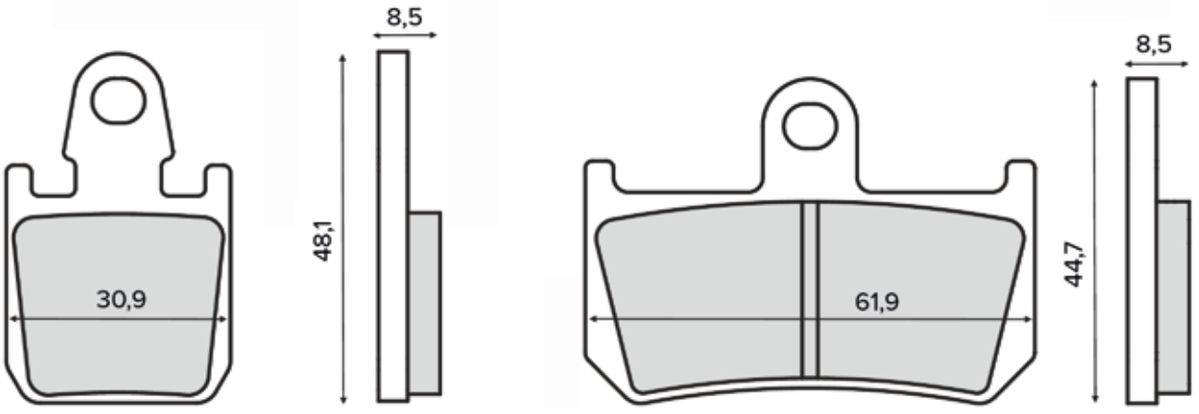

225102983

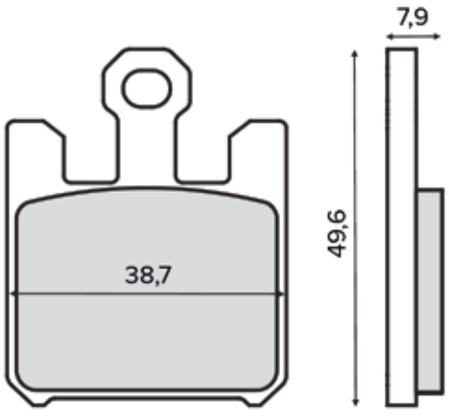

225102993

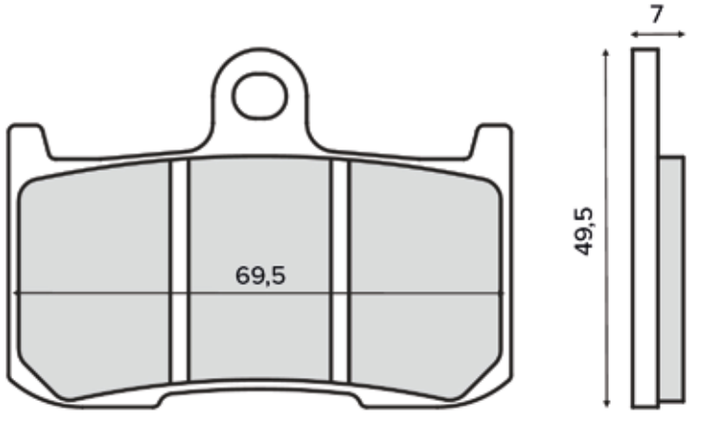

SINTER HIGH PERFORMANCE BRAKES **225103003**

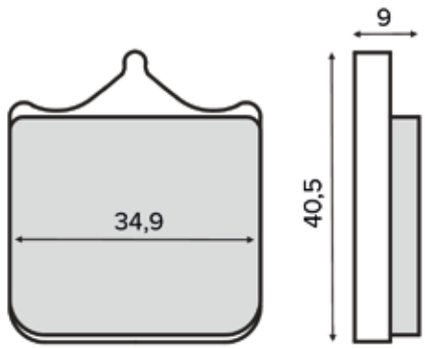

SINTER HIGH PERFORMANCE BRAKES **225103013**

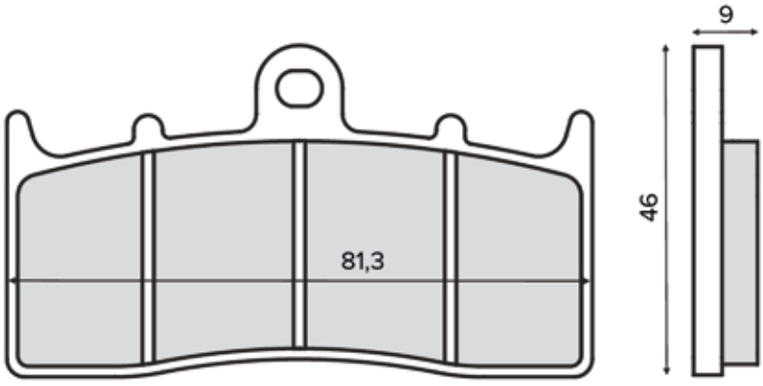

225103020

SINTER HIGH PERFORMANCE BRAKES **225103023**

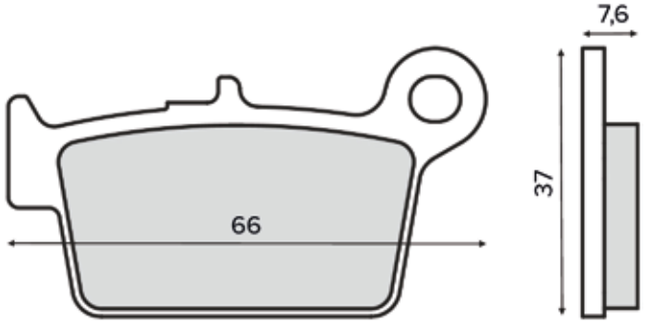

225103030

SINTER HIGH PERFORMANCE BRAKES **225103033**

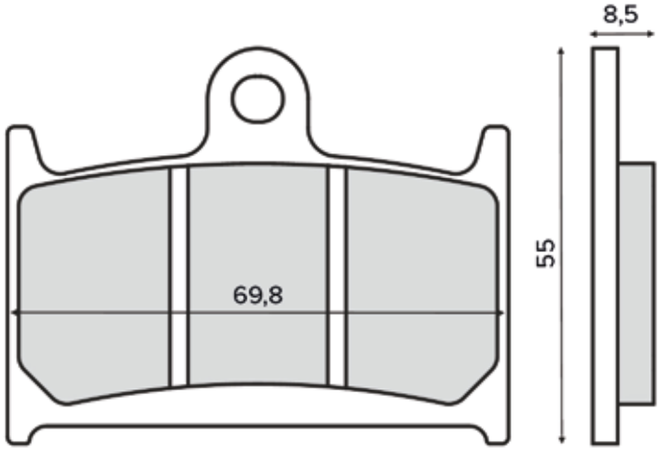

SINTER HIGH PERFORMANCE BRAKES

225103043

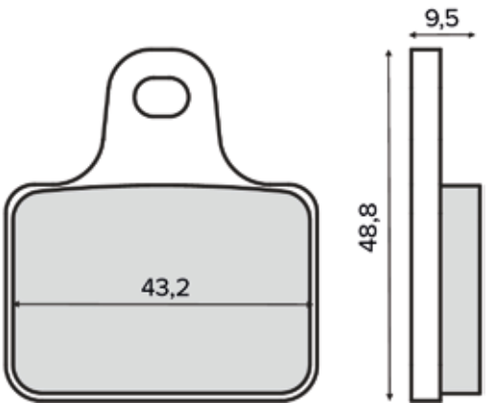

225103050

SINTER HIGH PERFORMANCE BRAKES

225103053

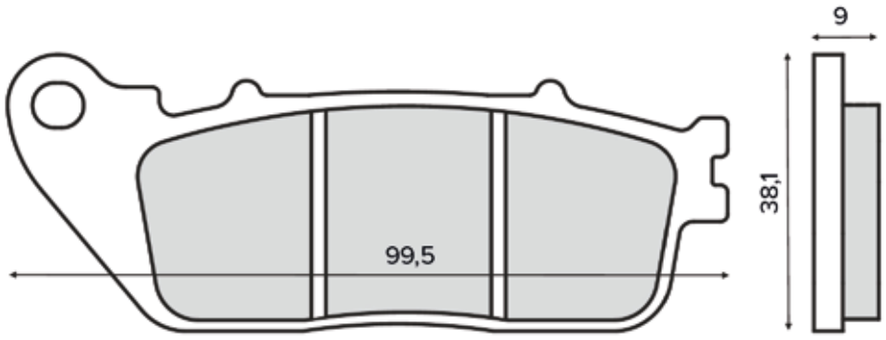

225103060

SINTER HIGH PERFORMANCE BRAKES

225103063

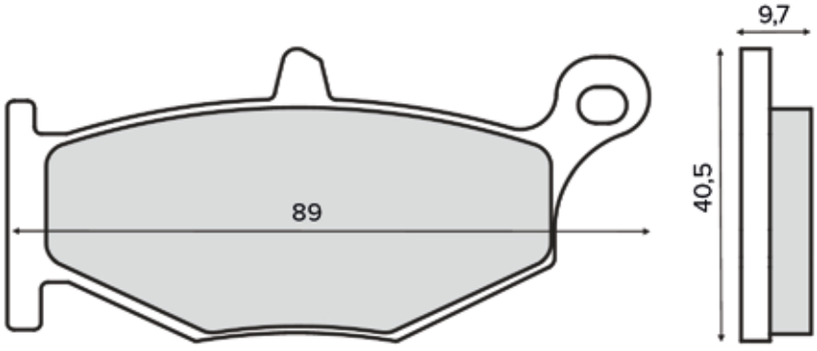

225103070	
225103073	

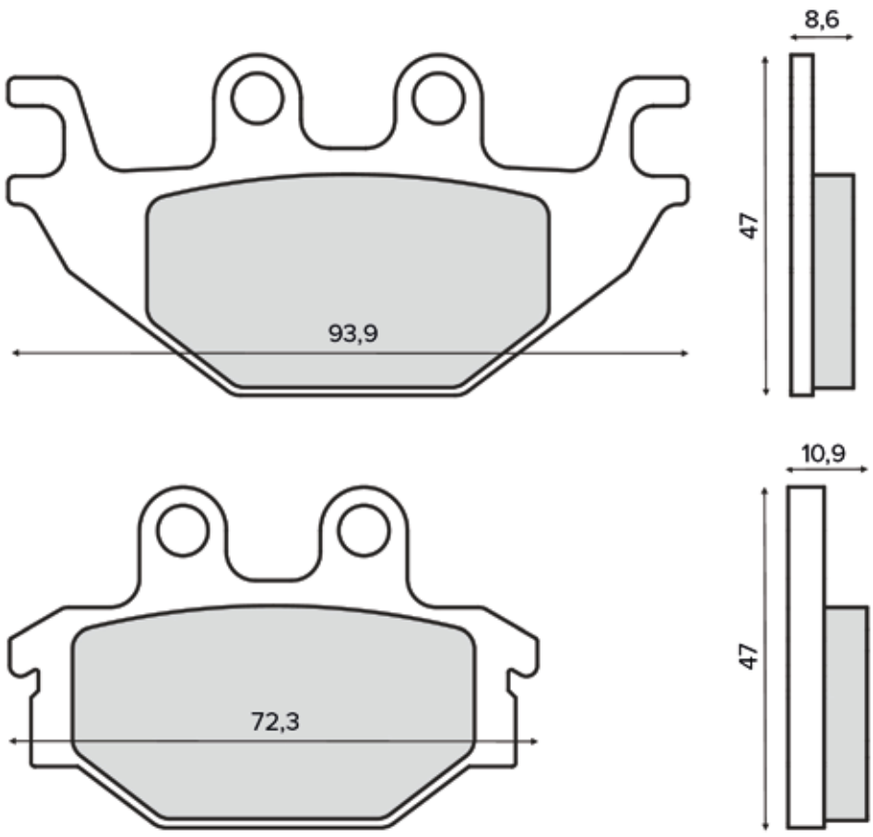

225103080	
225103083	

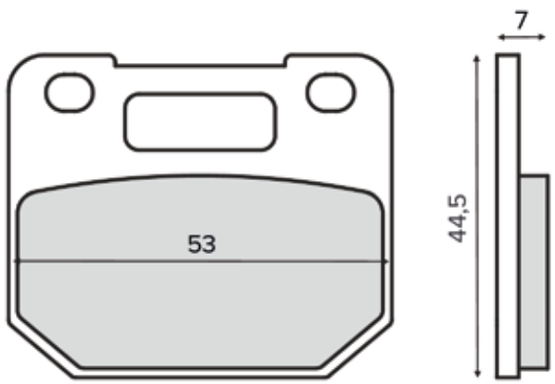

SINTER HIGH PERFORMANCE BRAKES **225103093**

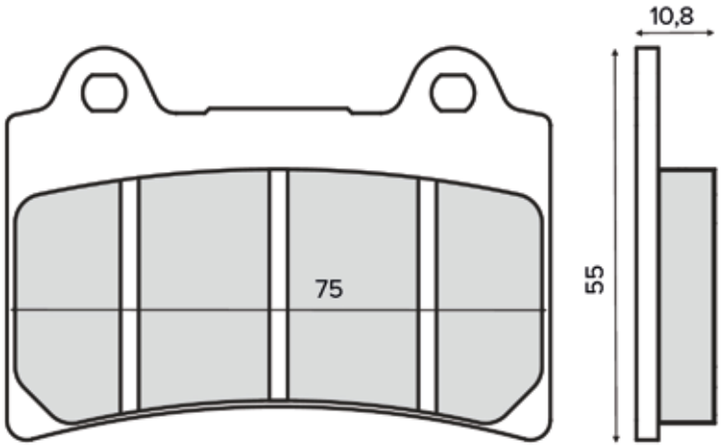

SINTER HIGH PERFORMANCE BRAKES **225103103**

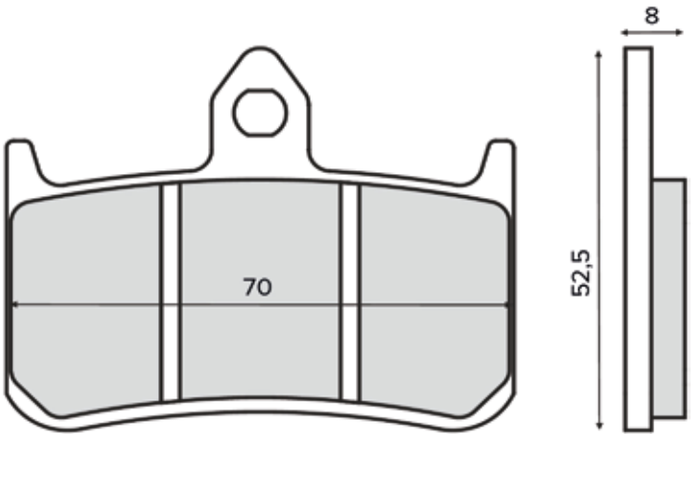

225103110

SINTER HIGH PERFORMANCE BRAKES **225103113**

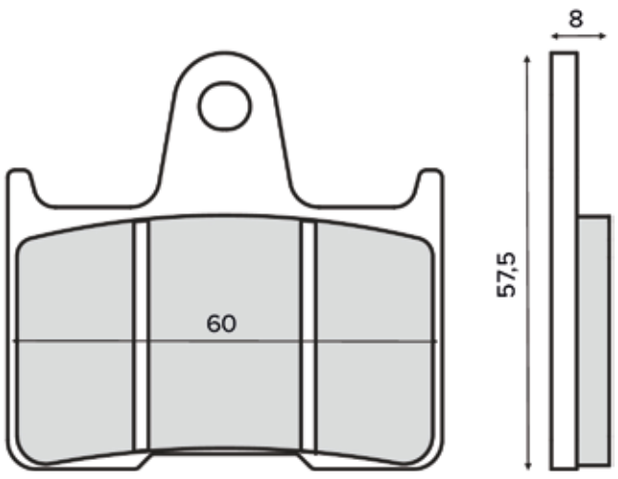

SINTER HIGH PERFORMANCE BRAKES

225103123

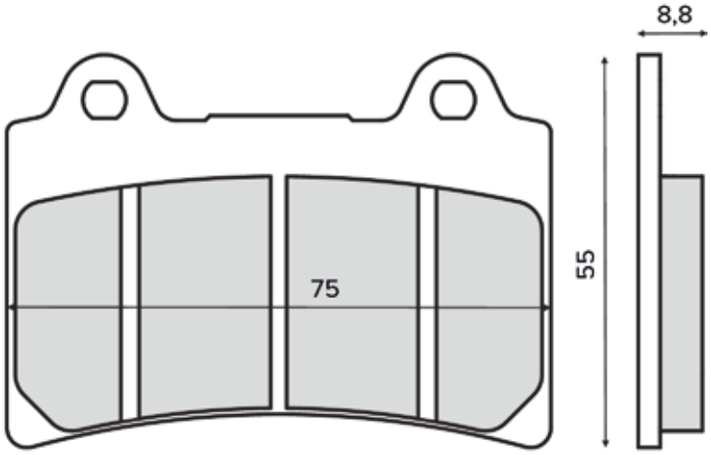

225103130

SINTER HIGH PERFORMANCE BRAKES

225103133

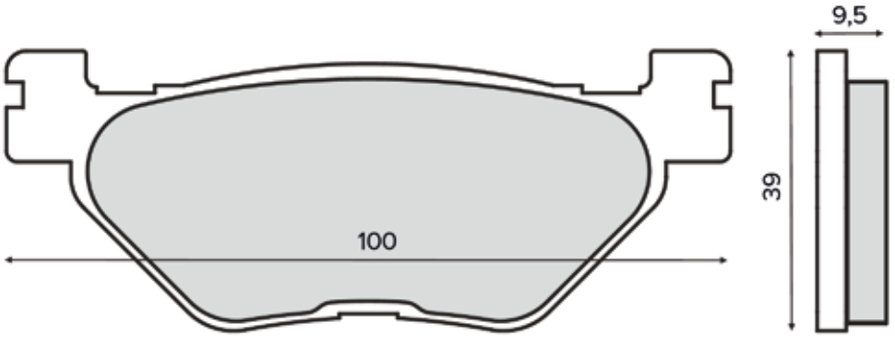

225103140

SINTER HIGH PERFORMANCE BRAKES

225103143

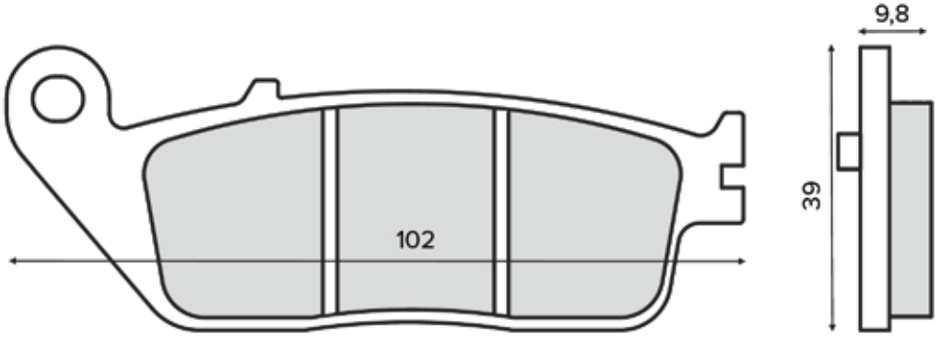

225103150	
225103153	

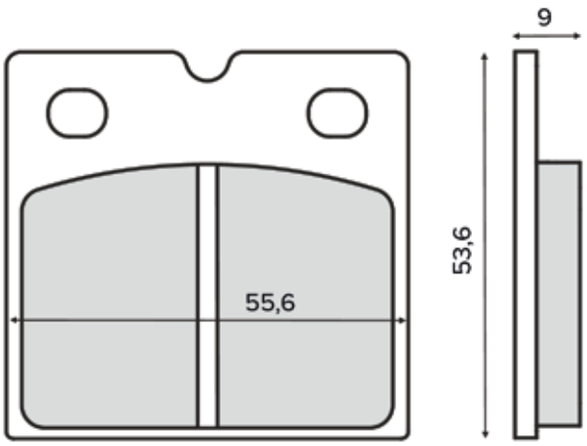

225103160	
225103163	

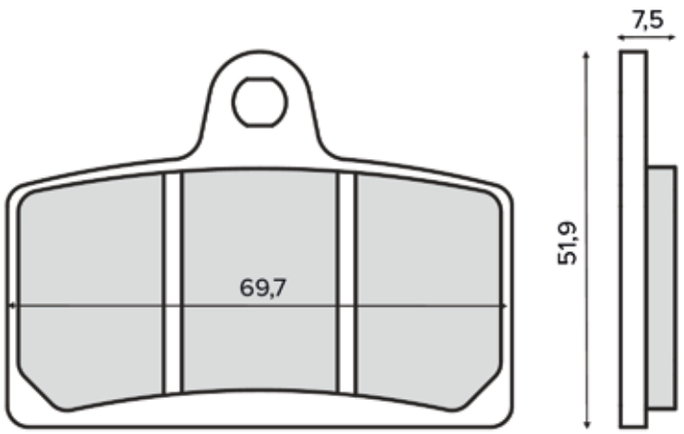

225103170	
225103173	

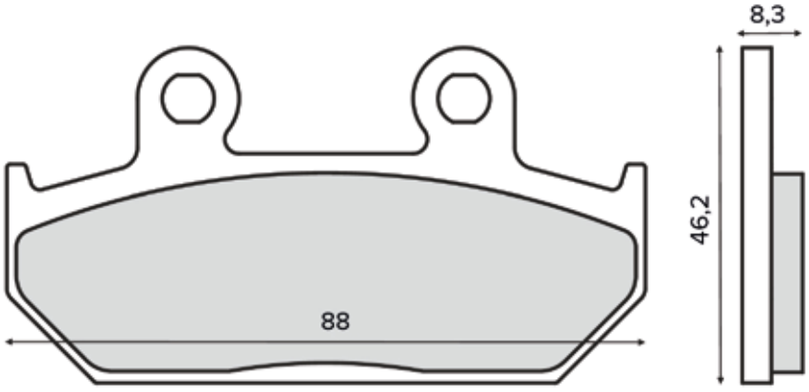

225103180

225103183

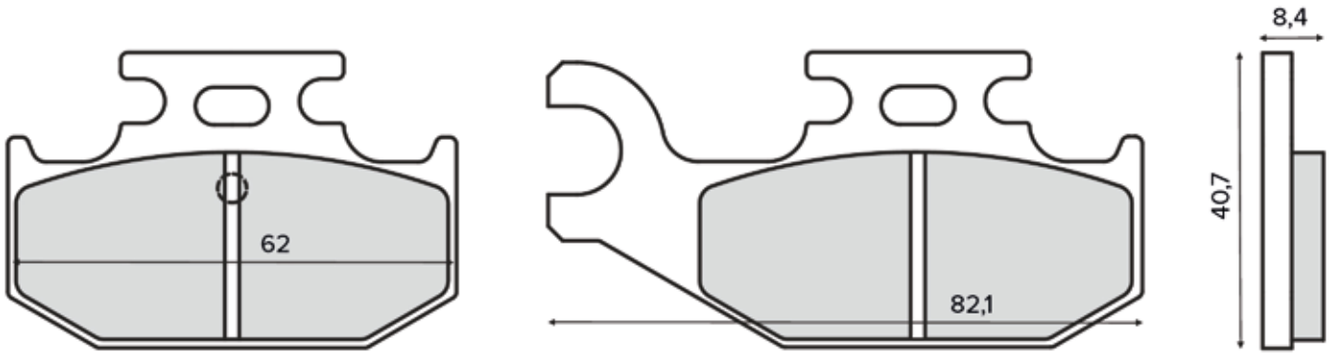

225103193

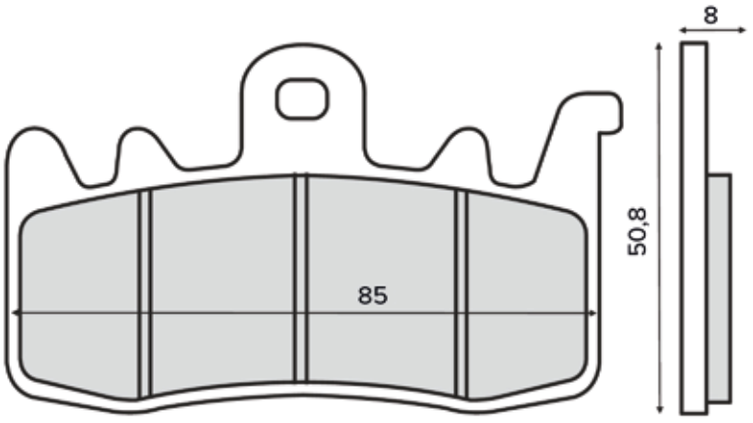

225103200	
225103203	

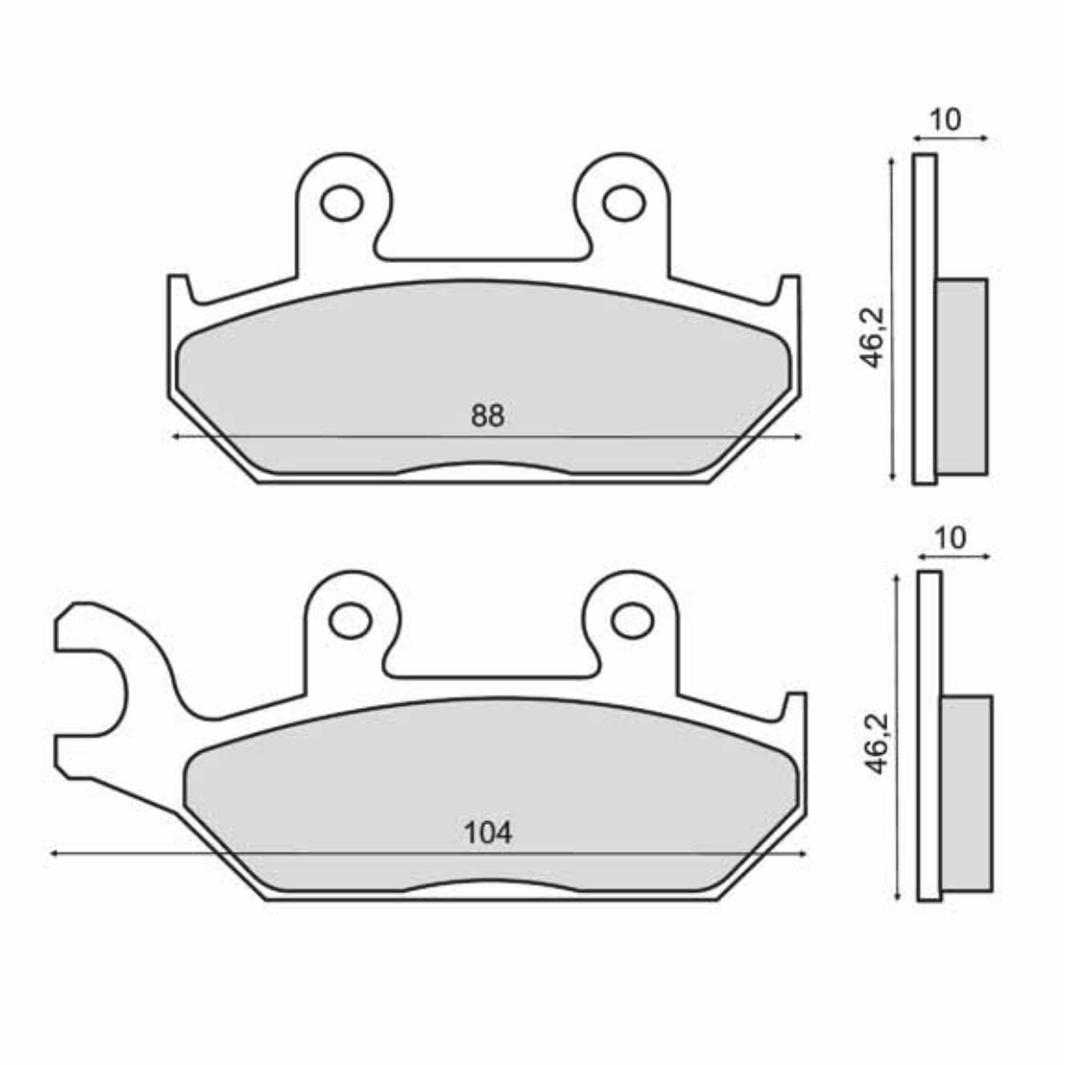

225103210

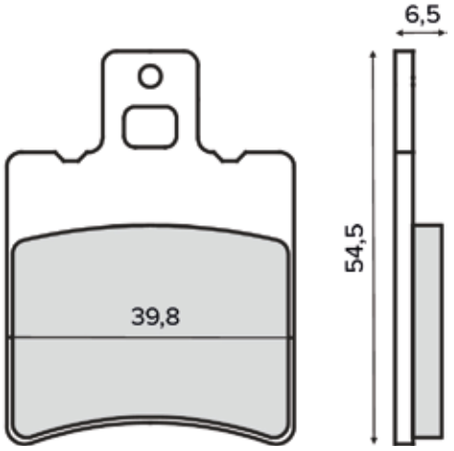

225103220

225103223

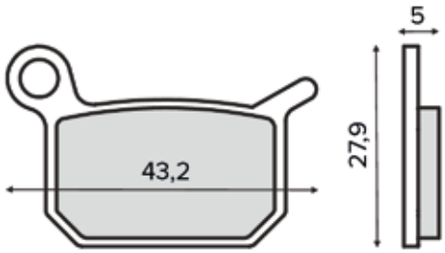

225103230

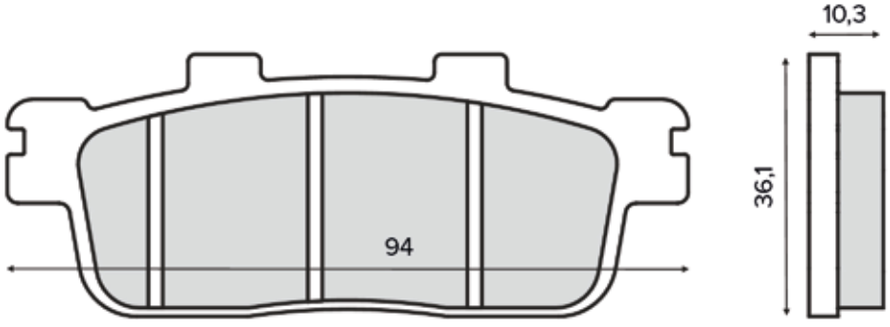

225103240

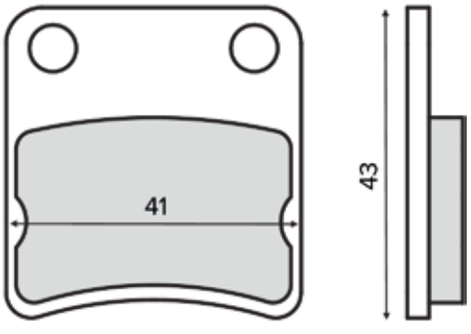

225103250	
225103253	

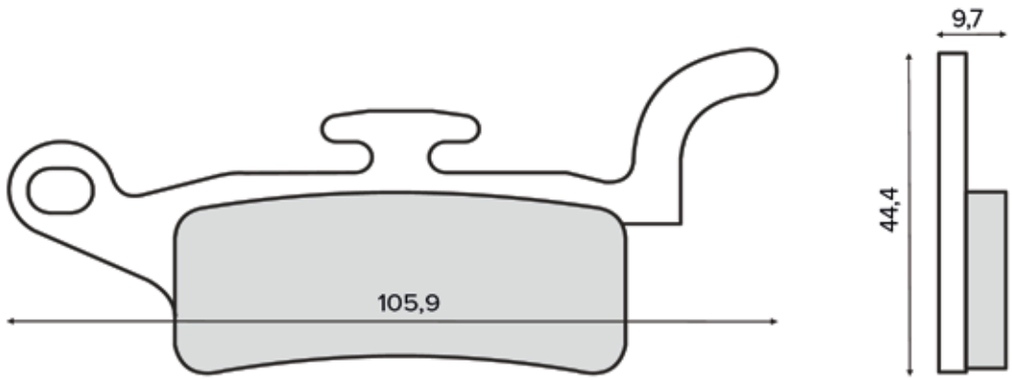

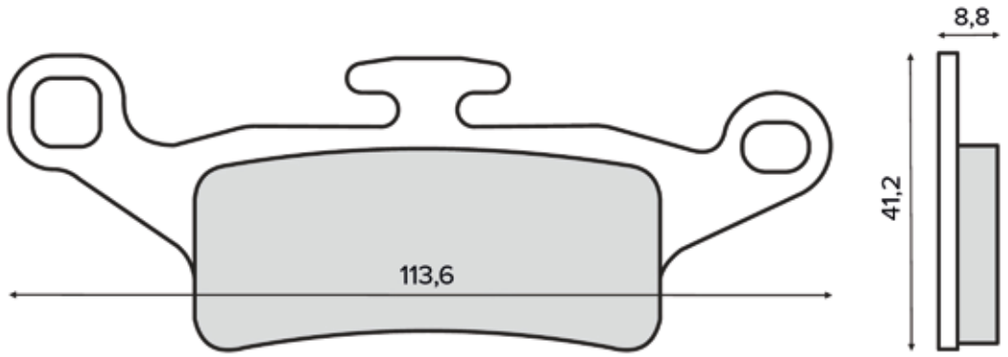

225103260	

225103270	
225103273	

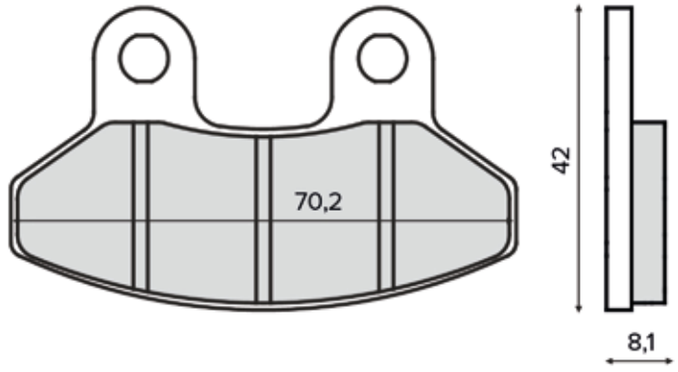

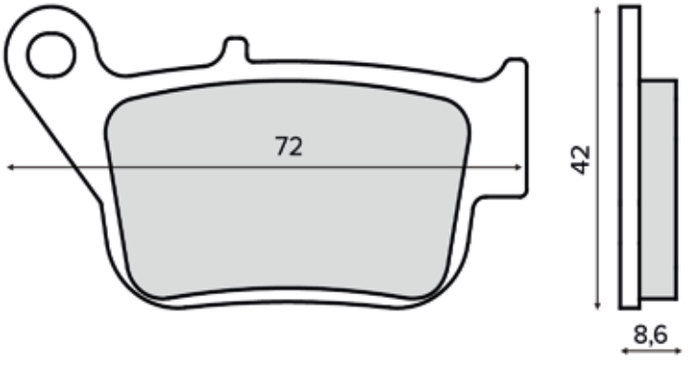

225103280	
225103283	

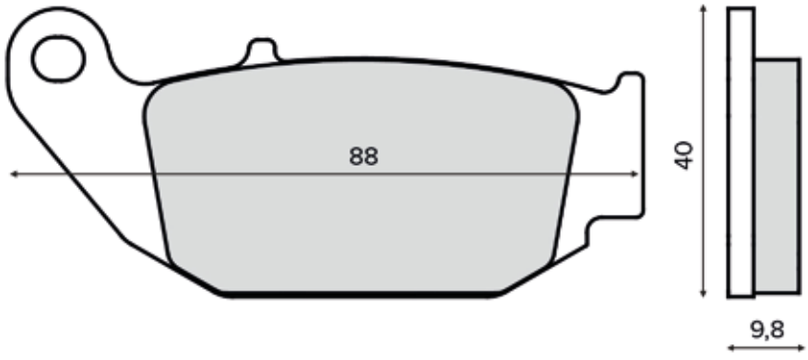

225103290	
225103293	

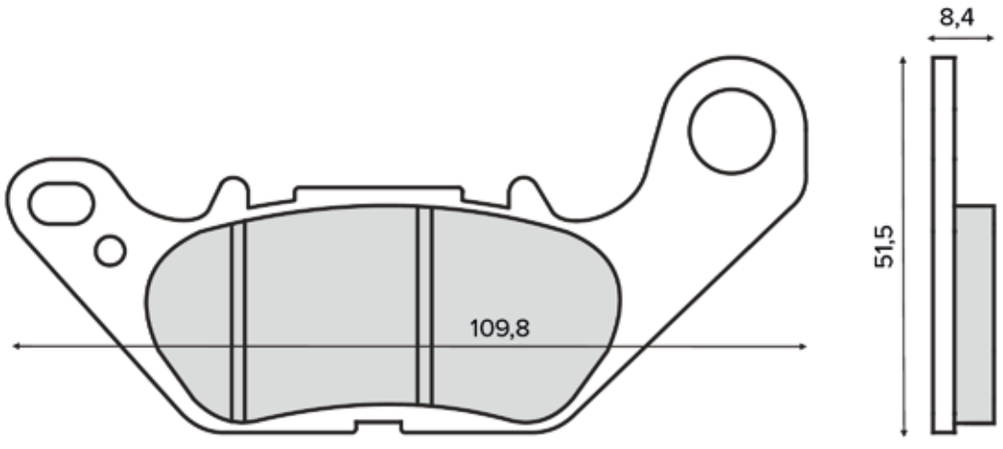

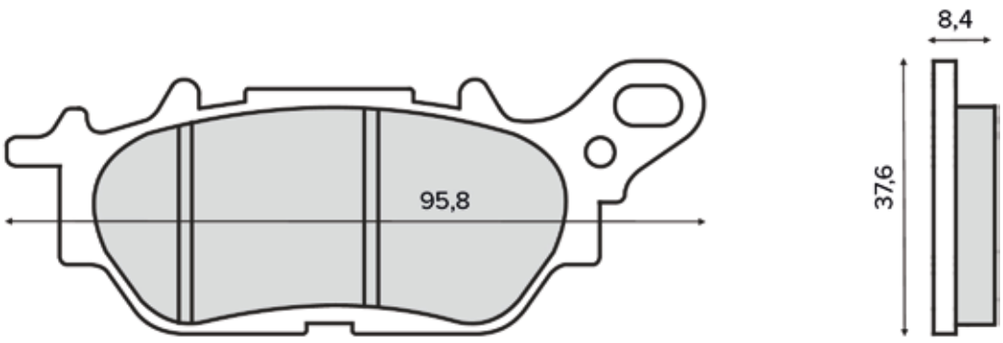

225103300

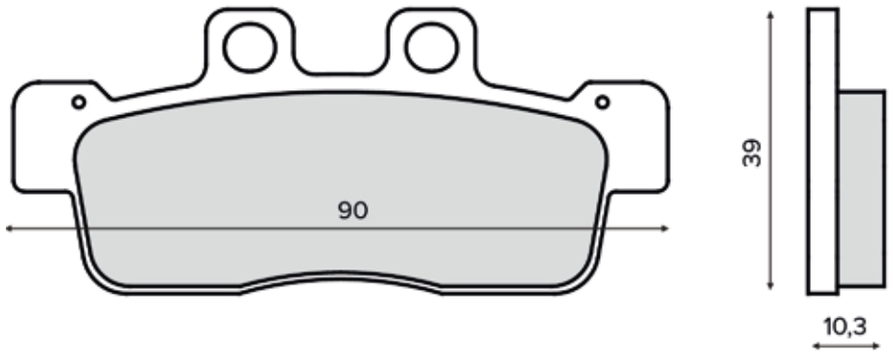

225103310

SINTER HIGH PERFORMANCE BRAKES

225103313

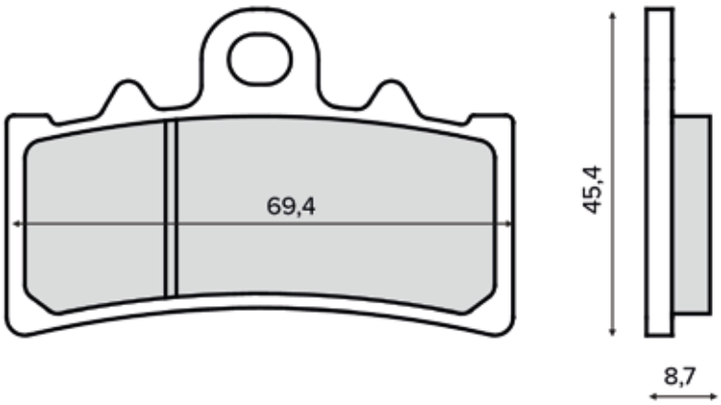

225103340

SINTER HIGH PERFORMANCE BRAKES 225103343

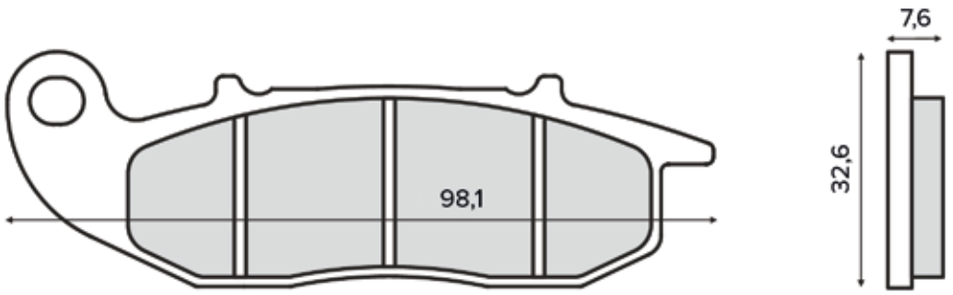

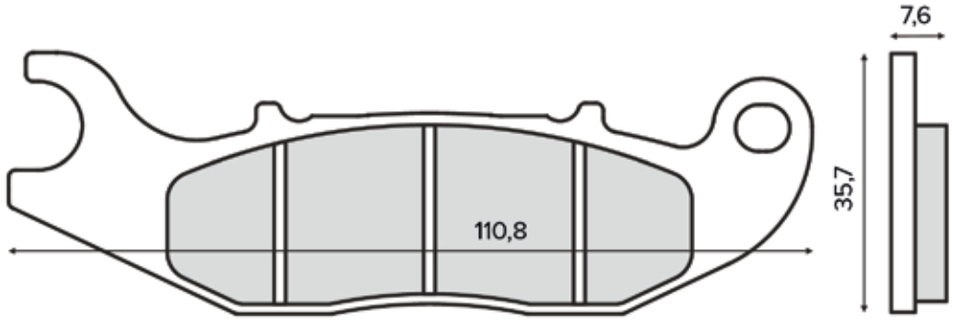

SINTER HIGH PERFORMANCE BRAKES 225103353

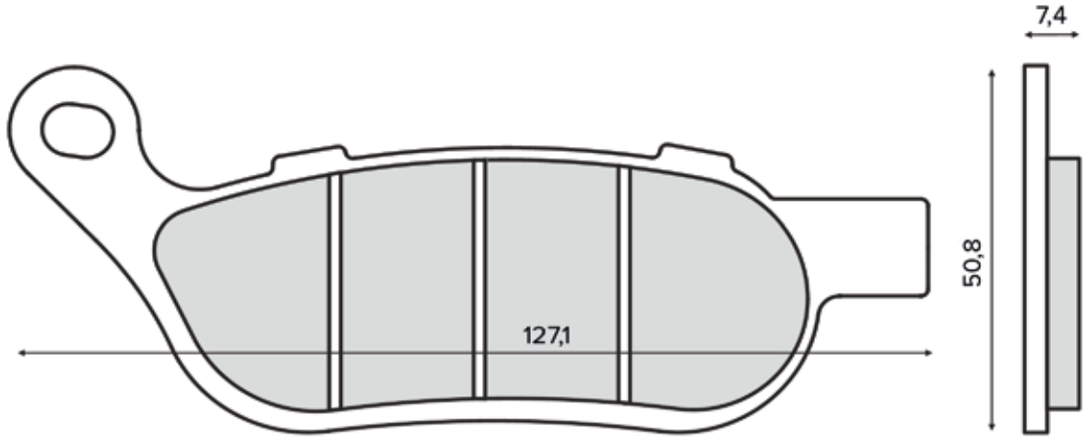

SINTER HIGH PERFORMANCE BRAKES **225103363**

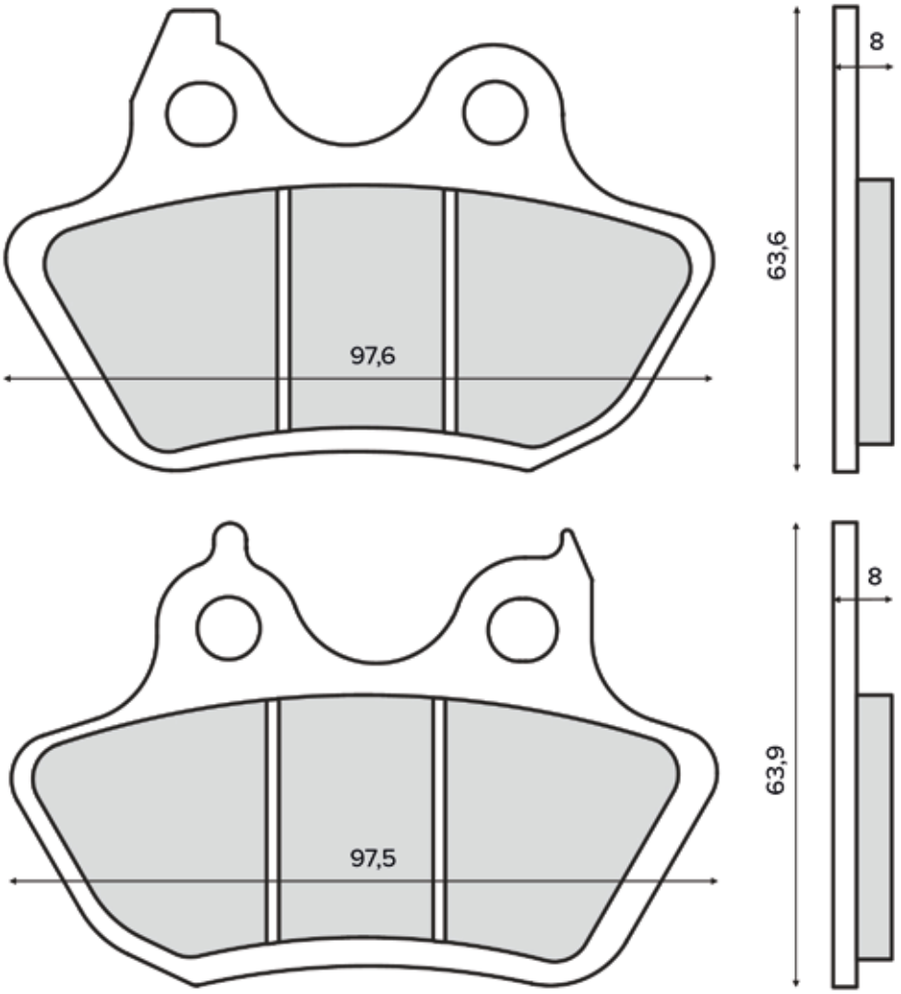

SINTER HIGH PERFORMANCE BRAKES **225103373**

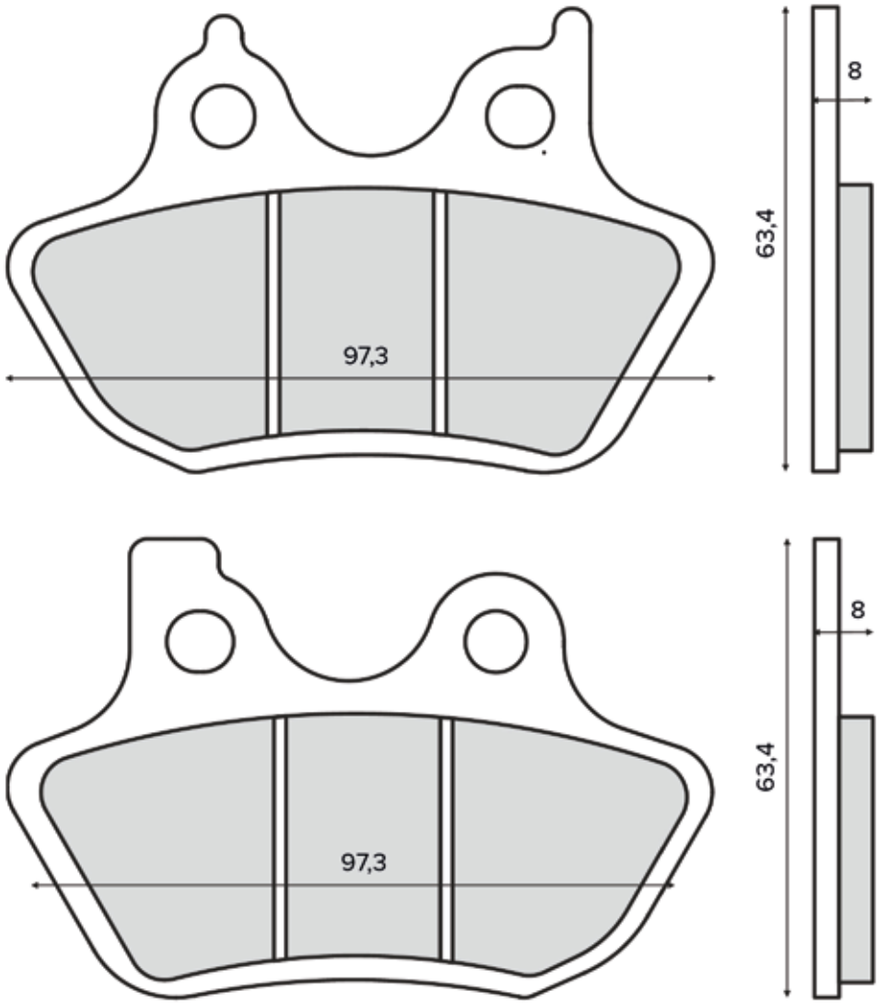

SINTER HIGH PERFORMANCE BRAKES **225103383**

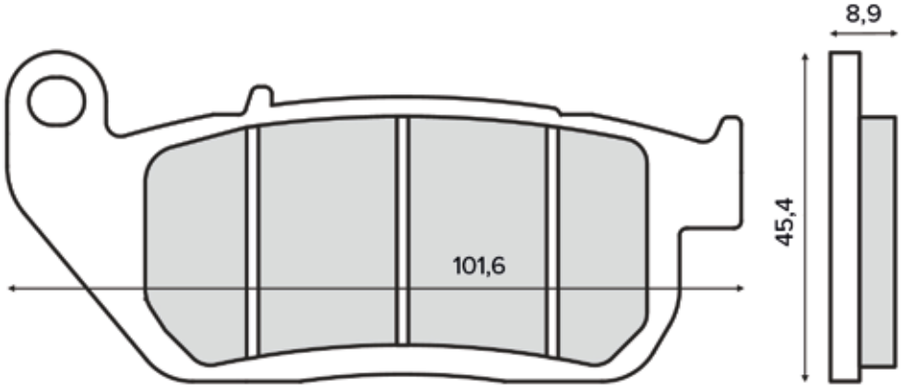

SINTER HIGH PERFORMANCE BRAKES **225103393**

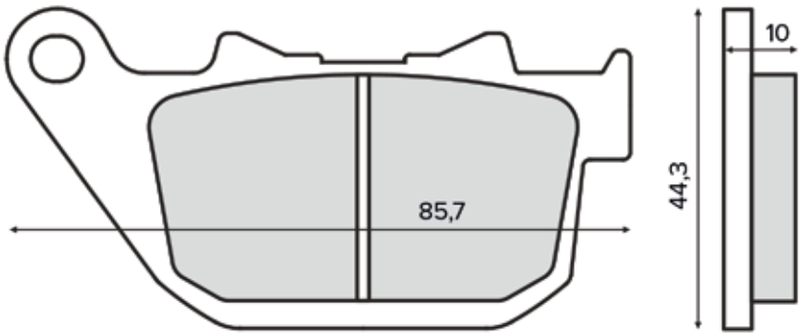

SINTER HIGH PERFORMANCE BRAKES **225103403**

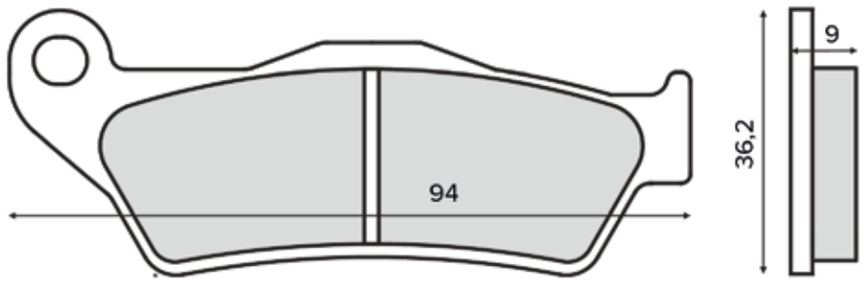

SINTER HIGH PERFORMANCE BRAKES **225103413**

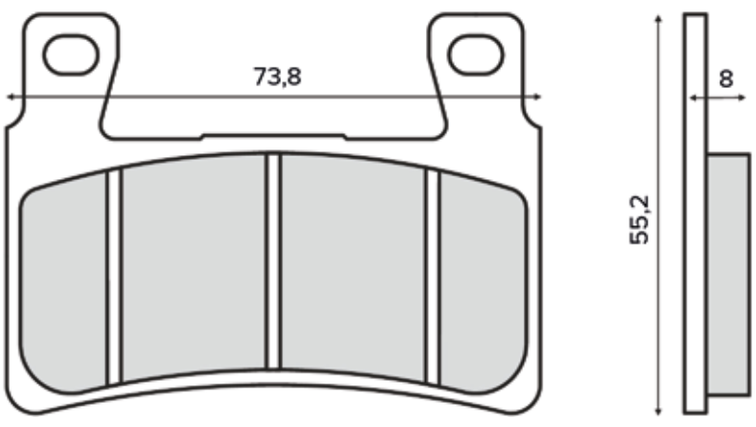

SINTER HIGH PERFORMANCE BRAKES **225103423**

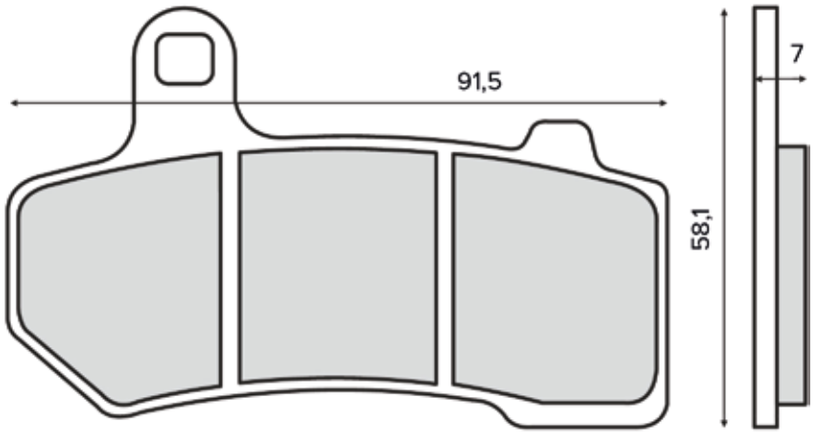

SINTER HIGH PERFORMANCE BRAKES **225103433**

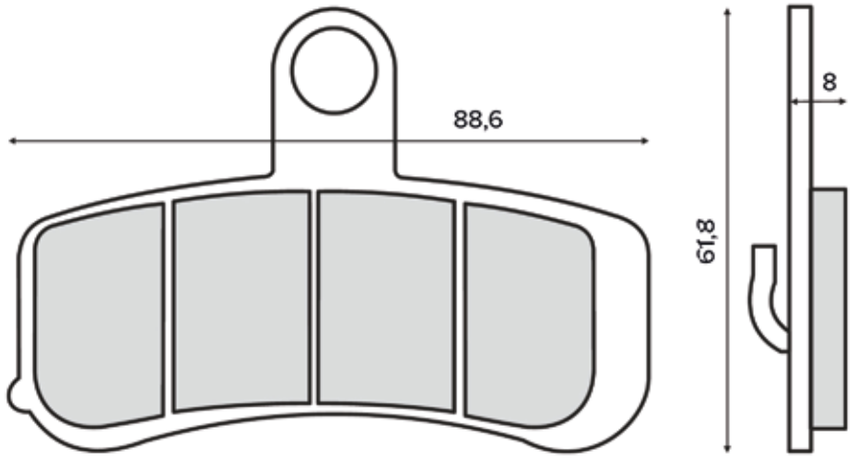

225103440

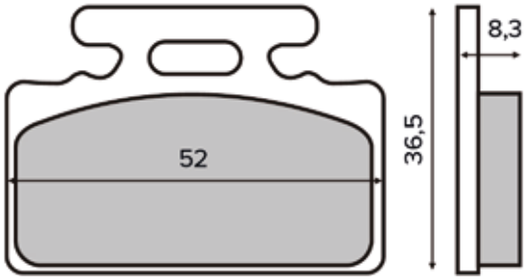

225103450

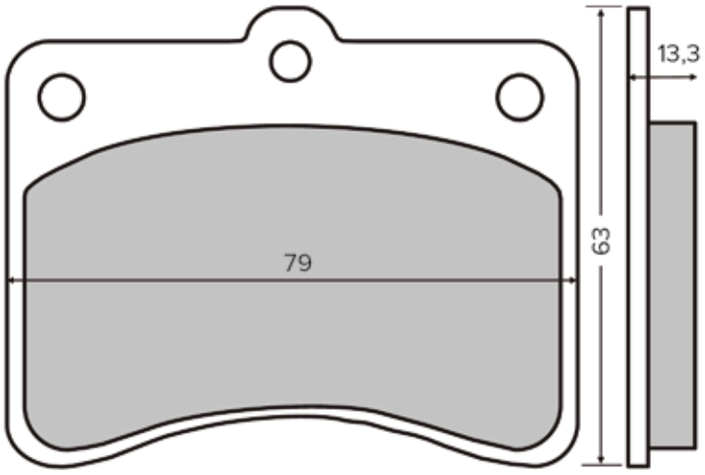

225103460

225103463

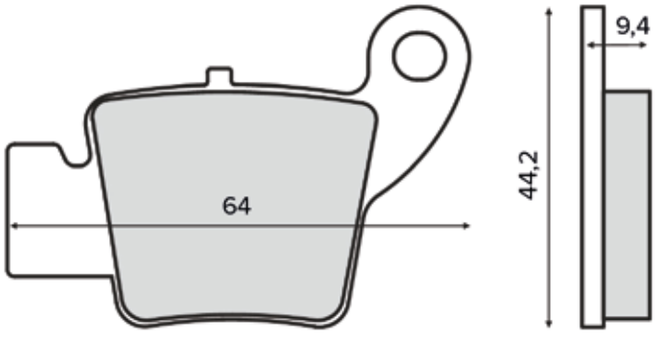

225103470

225103473

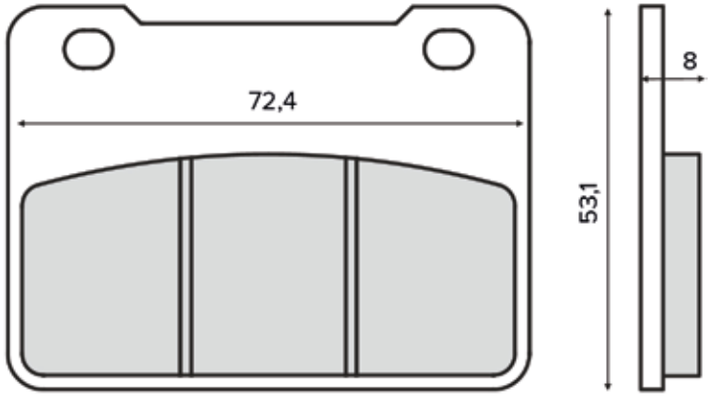

225103480	
225103483	

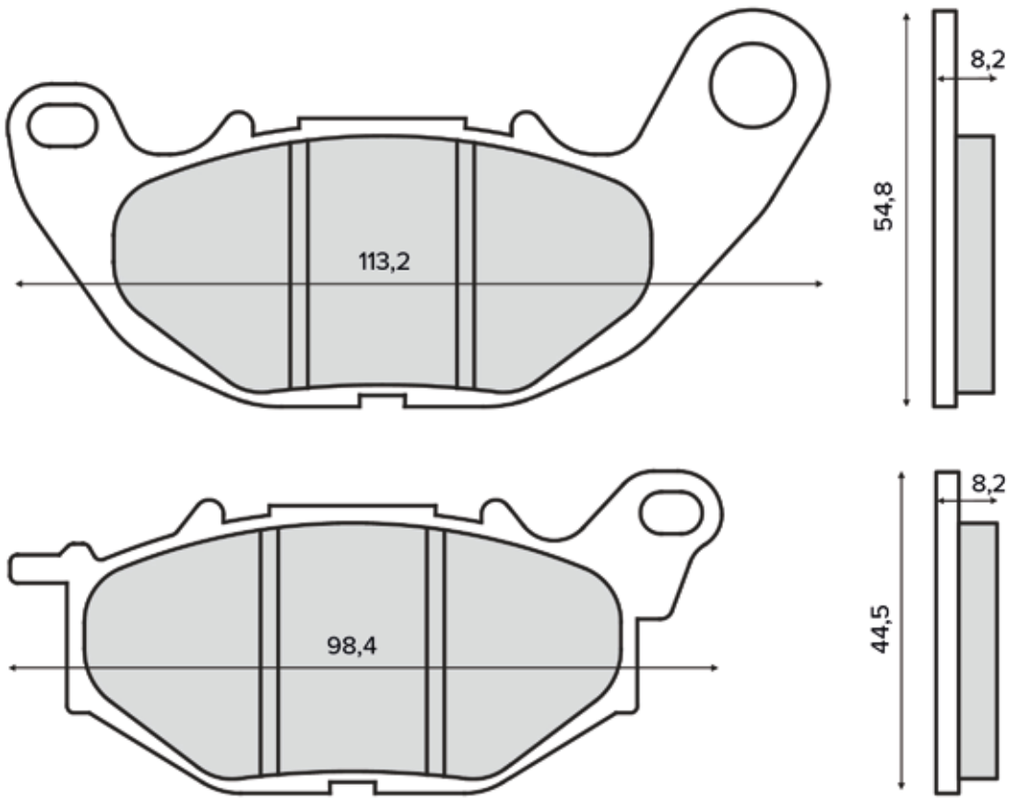

225103490	
225103493	

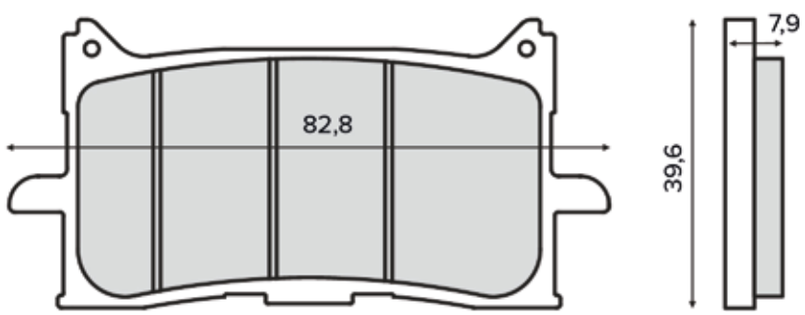

225103500

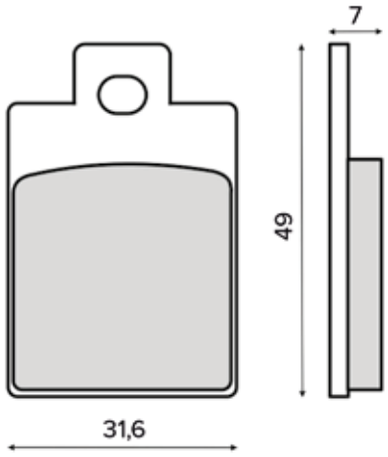

225103513

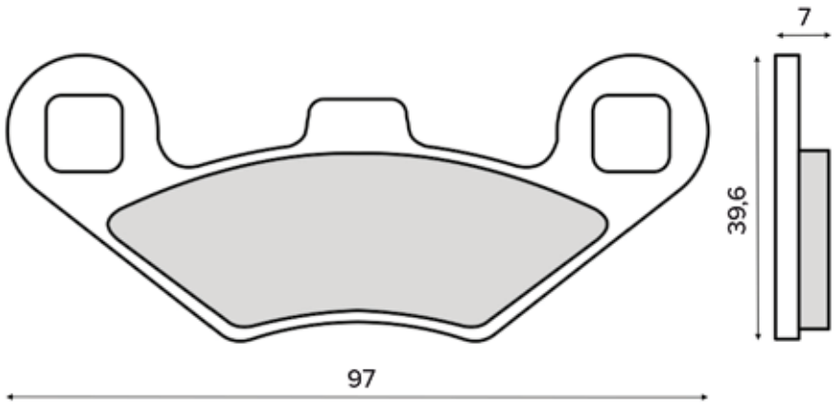

225103520

225103323

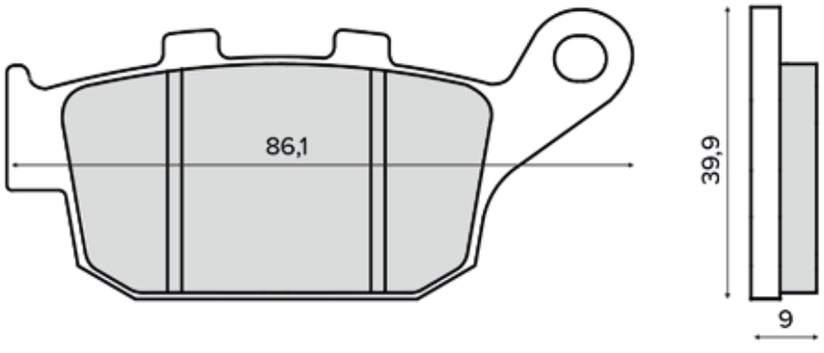

225103530

225103533

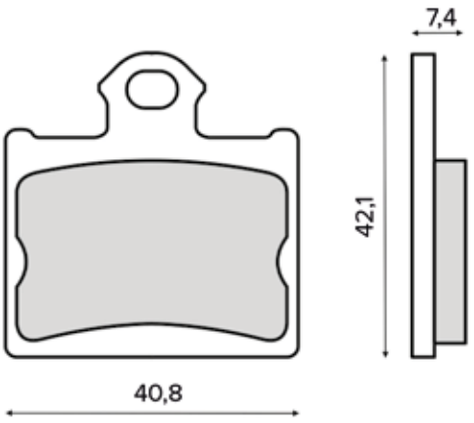

225103543

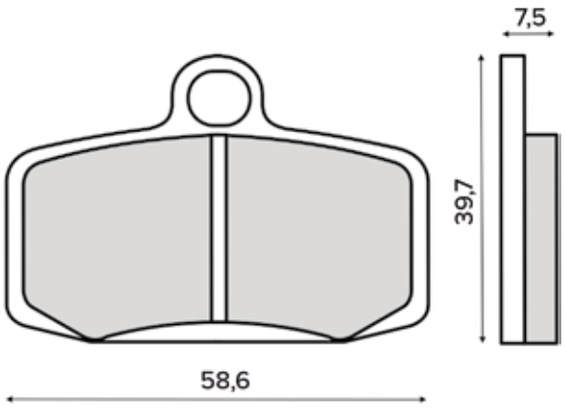

225103550

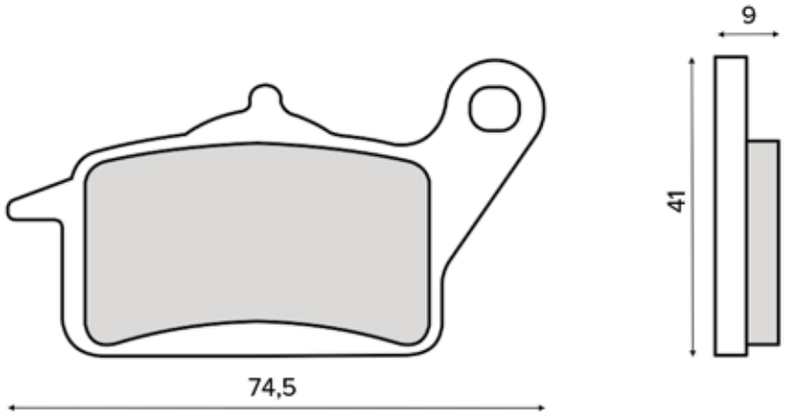

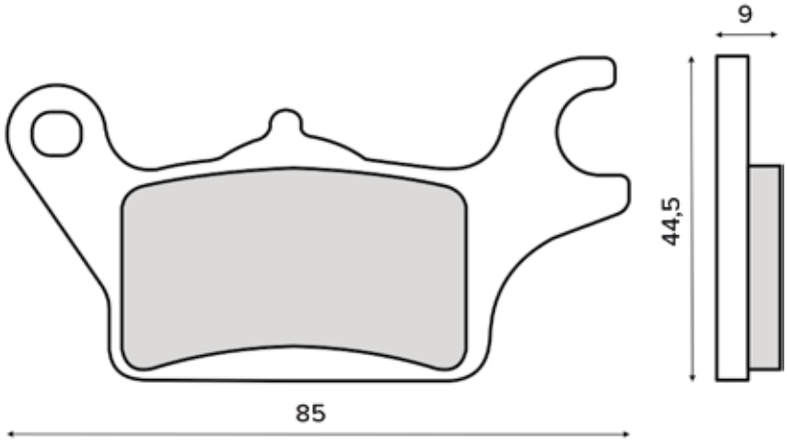

225103560

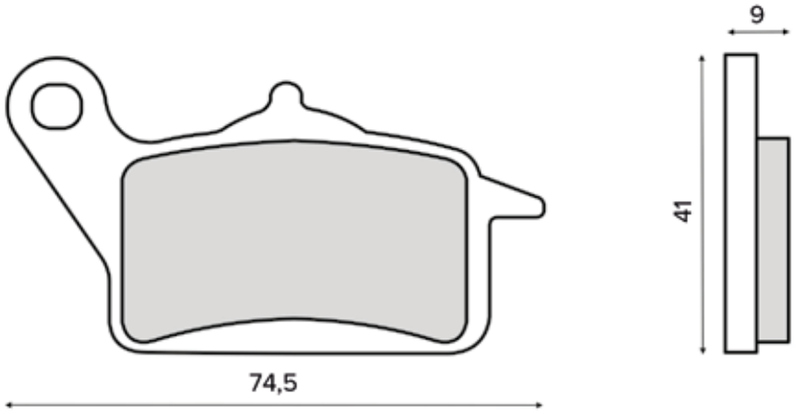

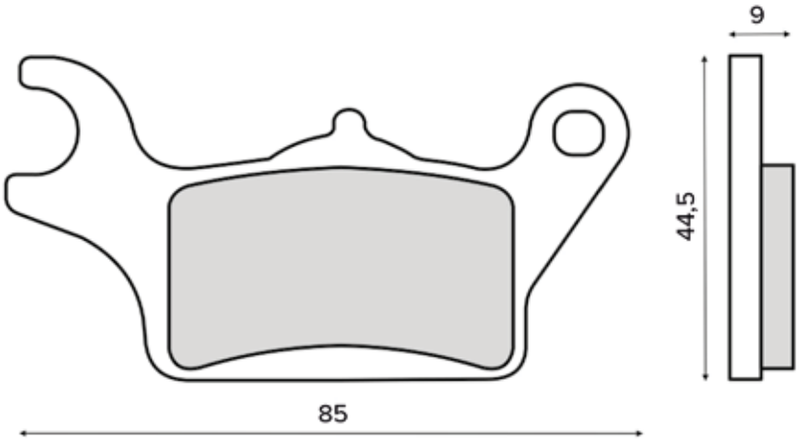

225103570

225103573

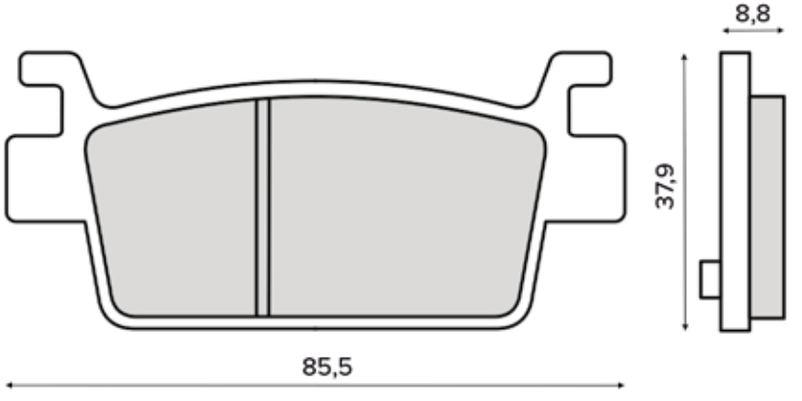

225103580	
225103583	

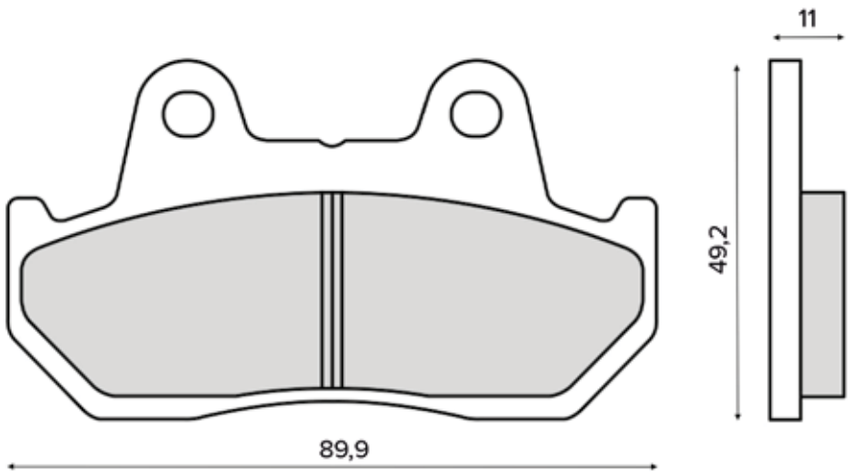

225103590	

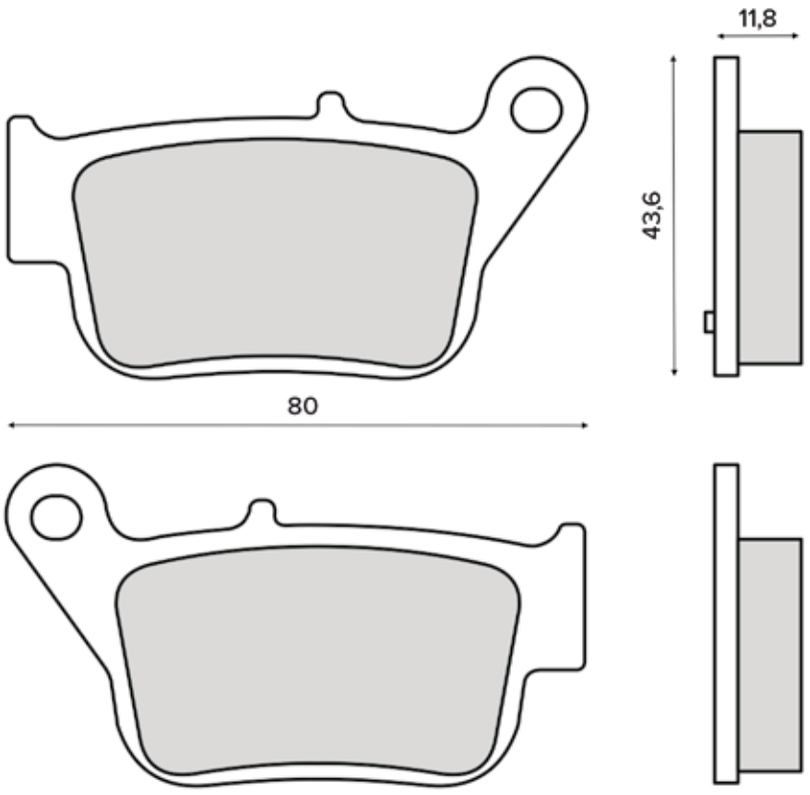

225103600

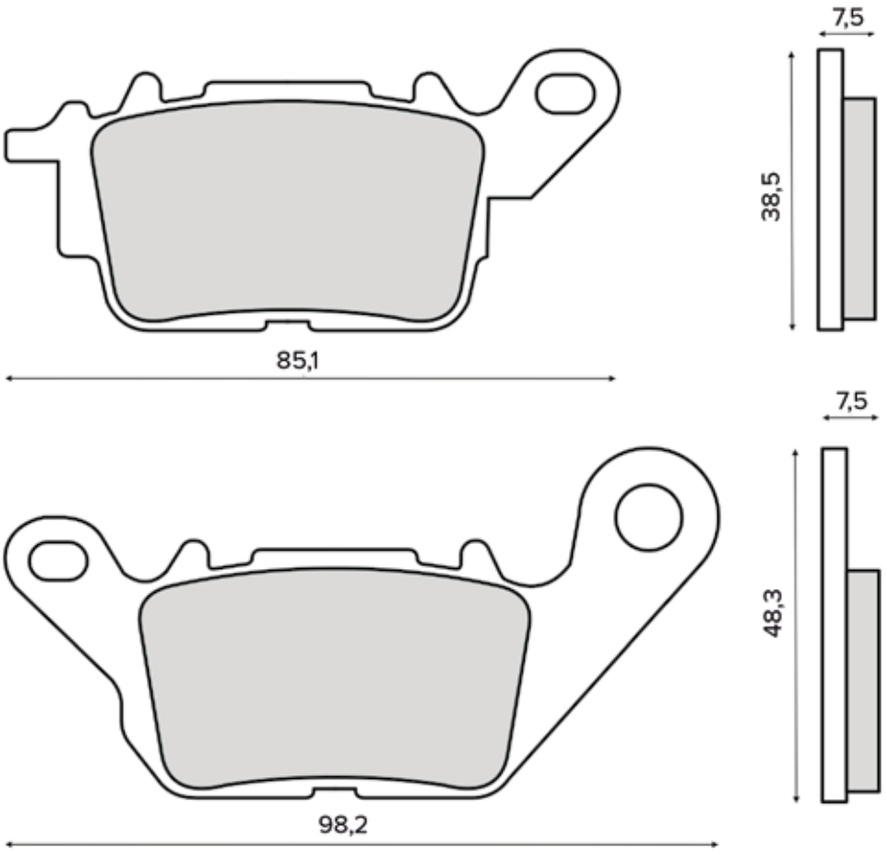

225120051

Anteriore | *Front*
Posteriore | *Rear*

MBK - YAMAHA: R.O. 4KNW253E1100

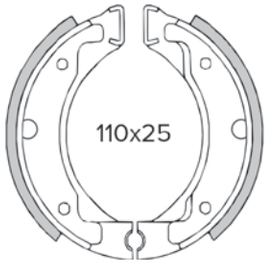

225120061 NEW

Anteriore | *Front*
Posteriore | *Rear*

BENELLI: R.O. R030464020000
KEEWAY: R.O. 54200BMBT000
MBK - YAMAHA: R.O. 4BXW2523E0000

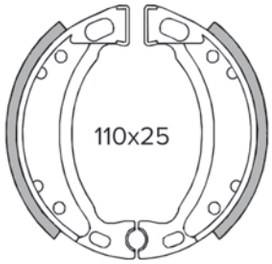

225120070

Anteriore | *Front*
Posteriore | *Rear*

HONDA: R.O. 43120-GW6-322
KYMCO

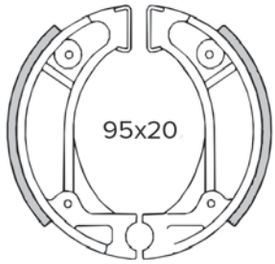

225120080

Anteriore | *Front*
Posteriore | *Rear*

HONDA



225120090

225120091

Anteriore | *Front*
Posteriore | *Rear*

APRILIA - ATALA - BENELLI - BETA - CAGIVA - KYMCO - HONDA - MALAGUTI - PEUGEOT - SYM - YAMAHA



225120130

225120131

Anteriore | *Front*

APRILIA - ATALA - CAGIVA - DERBI - ITALJET - SUZUKI

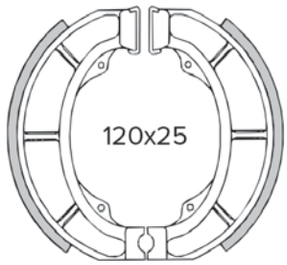

225120160

225120161

225120570

Anteriore | *Front*
Posteriore | *Rear*

PIAGGIO 50: Vespa PK • Vespa PK XL • Vespa FL >90
PIAGGIO 125-150-180-200: Vespa PK • Vespa PK XL • Vespa PX • Vespa PXE Arcobaleno • Vespa PX125E >98 (Freno a disco - *Brake disc model*) • Vespa Sprint Veloce • Vespa SS • Vespa GS • Vespa Rally
R.O. 414450

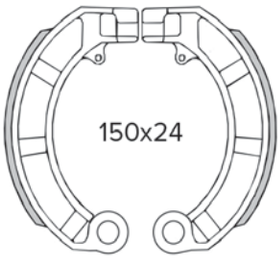

225120170

Anteriore | *Front*

PIAGGIO 50: Vespa 50 • Vespa PK • Vespa 50 Special • Vespa PK XL >86 • Ape P 80-85 • Ape TM P 85-89 • Ape FL-FL2 89-95 • Ape FL3 Europa 96-99 • Ape RST Mix 99-05 • Aper Euro2 03-10
PIAGGIO 125: Vespa Primavera ET3 • Vespa 125 51-72
PIAGGIO 150: Vespa 150 51-72 • Vespa Super
R.O. 266506



225120180

Posteriore | *Rear*

PIAGGIO 50: Vespa 50 Special
PIAGGIO 125: Vespa Primavera ET3
R.O. 100492

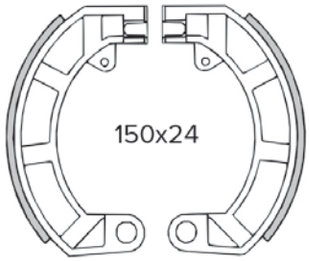

225120190

Anteriore | *Front*
Posteriore | *Rear*

BENELLI - PIAGGIO - BETA - FANTIC - GARELLI - GILERA - MALAGUTI - MOTO GUZZI - RIZZATO - TOMOS



225120200

Posteriore | *Rear*

APRILIA - BETA - FANTIC - GARELLI - GILERA - ITALJET - PIAGGIO - RIZZATO



225120220 NEW

225120221

PIAGGIO 50: Ape P 80-85 • Ape TM P 85-89 • Ape FL-FL2 89-95 • Ape FL3 Europa 96-99 • Ape RST Mix 99-05 • Ape Euro2 03-10
R.O. 154998

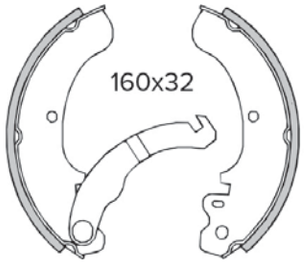

225120230

Ciclomotori | *Mopeds*
Posteriore | *Rear*

GILERA: R.O. 4145574
ITALJET
PIAGGIO: R.O. 4145574



225120251

6 Pezzi | *6 pcs*
Anteriore | *Front*
Posteriore | *Rear*

PIAGGIO 420: Ape Car Diesel 86-96 • Ape Max Diesel 86-96
R.O. 498401

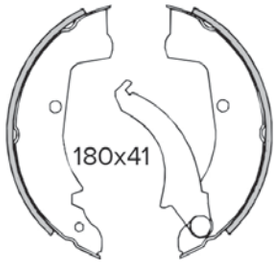

225120261

6 Pezzi | *6 pcs*
Posteriore | *Rear*

PIAGGIO 220: Ape Car P2-P3 78-85 • Ape TM P602 82-83 • Ape TM P703-P703V-FL2 84-02 • Ape TM 09-10
PIAGGIO 420: Ape TM P703-P703V Diesel 87-01 • Ape TM D LCS 05-10 • Ape MP 601 Classic 06-07
R.O. 154991

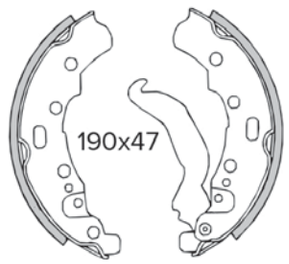

225120300 NEW

Posteriore | *Rear*
GILERA - PIAGGIO: R.O. 2691825

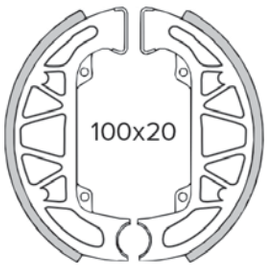

225120350

Posteriore | *Rear*
APRILIA - DERBI - GILERA: R.O. 82907R
ITALJET
PIAGGIO: R.O. 82907R



225120360

Posteriore | *Rear*
GILERA - PIAGGIO: R.O. 2727115

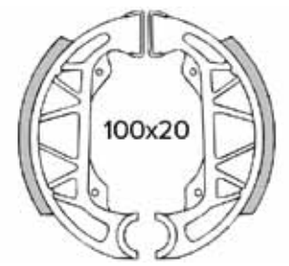

225120401

Posteriore | *Rear*
HONDA: R.O. 06450-KS4-601
ITALJET
PEUGEOT: R.O. 741679
PIAGGIO: R.O. 495399

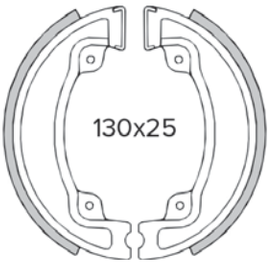

225120410

Posteriore | *Rear*
HONDA: R.O. 06430-KFG-000

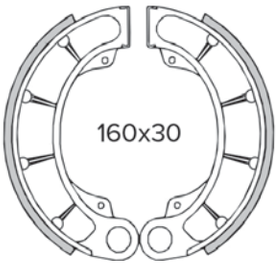

225120421

Posteriore | *Rear*
APRILIA - GILERA - DERBI - PIAGGIO: R.O. 56294R



225120451

Posteriore | *Rear*

APRILIA: R.O. AP8113913
BENELLI: R.O. R44790051A0
ITALJET
MBK: R.O. 3LSW25360000
YAMAHA: R.O. 3LSW25360000

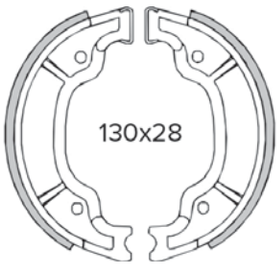

225120460

Posteriore | *Rear*

KEEWAY: R.O. 54200K3AP000
YAMAHA: R.O. 4HCW253E0000

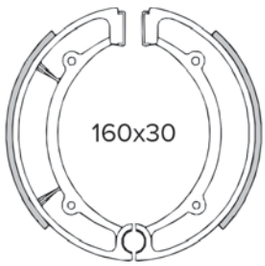

225120470

225120471

Posteriore | *Rear*

HONDA: R.O. 06430-GBJ-K20

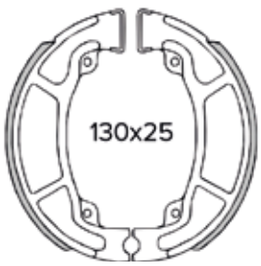

225120480

Posteriore | *Rear*

YAMAHA: R.O. 5WWF530K0000



225120501

Posteriore | *Rear*

PIAGGIO 125-150-200: Cosa >90
R.O. 414437



225120511

Anteriore | *Front*

PIAGGIO 125-150-200: Cosa >90
R.O. 414429

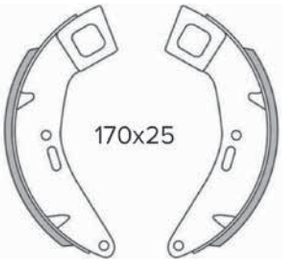

225120520

Anteriore | *Front*

PIAGGIO 150-160: Vespa Sprint Veloce • Vespa GS
PIAGGIO 180-200: Vespa SS • Vespa Rally
R.O. 026832



225120530

225120531

Posteriore | *Rear*

PIAGGIO 125-150: Vespa 125-150 63-72
R.O. 81229



225120540

Posteriore | *Rear*

PIAGGIO 150: Vespa Super
R.O. 110412

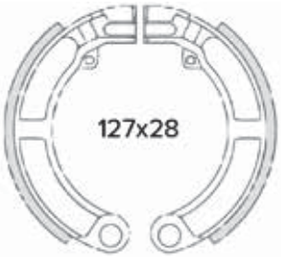

225120550

Posteriore | *Rear*

PIAGGIO 125-150: Vespa 125-150 51-62
R.O. 078170



225120560

Posteriore | *Rear*

APRILIA - DERBI: R.O. 56293R
MALAGUTI: R.O. 11965100
PIAGGIO: R.O. 56293R



225120601

Anteriore | *Front*
Posteriore | *Rear*

INNOCENTI 125-150-175: Lambretta Li • Lambretta TV II



121950060

MOLLA GANASCIA | *BRAKE SHOES SPRING*

PIAGGIO 50-90-125: Vespa 50-90 • Vespa Primavera • Vespa Primavera ET3 • Vespa PK • Vespa PK XL
R.O. 025990



121950070

MOLLA GANASCIA | *BRAKE SHOES SPRING*

PIAGGIO 50-90-125: Vespa 50-90 • Vespa Primavera • Vespa Primavera ET3 • Vespa PK • Vespa PK XL
R.O. 078522



121950080

ANELLO GANASCIA | *BRAKE SHOES CLIP*

PIAGGIO 50: Ape P • Ape TM P • Ape FL-FL2-FL3 Europa • Vespa FL-FL2 • Vespa N • Vespa PK • Vespa PK XL • Vespa PK XL Rush
PIAGGIO 125: Vespa PX • Vespa PX T5 • Vespa PK • Vespa PK XL • Vespa PXE Arcobaleno
PIAGGIO 150: Vespa Super • Vespa Sprint • Vespa GR • Vespa GS • Vespa PX • Vespa PXE Arcobaleno
R.O. 000061



Modello *Model*	CC	Da *From*	A *To*	Telaio *Frame*	OEM Anteriore *OEM Front*	RMS Anteriore *RMS Front*	OEM Posteriore *OEM Rear*	RMS Posteriore *RMS Rear*	Note *Notes*
APRILIA									
Area 51	50	1998	2000	MY	-	-	AP8213231	**225160200**	
Gulliver	50	1995	1998	LH000	AP8213231	**225160200**	-	-	
Gulliver Lc	50	1996	1998	LH040	AP8213231	**225160200**	-	-	
Mojito Custom	50	1999	2003	PK001\PKE10	AP8213231	**225160200**	-	-	
Mojito Custom 2T Motore Piaggio	50	2004	2010	TF000\TFA00	AP8213231	**225160200**	-	-	
Mojito Retro	50	1999	2003	PK000\PKD00	AP8213231	**225160200**	-	-	
Rally	50	1995	2003	MD000\MDH00	AP8213231	**225160200**	-	-	
Rally Liquid Cooled	50	1996	1999	MDA00\MAD10	AP8213231	**225160200**	AP8213231	**225160200**	
Scarabeo	50	1998	1998	PF000\PF0100	AP8213381	**225160040**	AP8213231	**225160200**	
Scarabeo	50	1999	1999	PF0\PFG	AP8213381	**225160040**	AP8213231	**225160200**	
Scarabeo	50	2000	2005	PFG00\TH000	AP8213381	**225160040**	AP8213231	**225160200**	
Scarabeo 2T	50	2014	2014	THH00	AP8213381	**225160040**	-	-	
Scarabeo 2T Eu2 Motore Piaggio	50	2010	2012	THG00	AP8213381	**225160040**	-	-	
Scarabeo 2T Net	50	2009	2010	THG00	AP8213381	**225160040**	-	-	
Scarabeo 4T	50	2002	2006	TG000	AP8213381	**225160040**	-	-	
Scarabeo 4T 4V	50	2010	2012	TGE00	AP8213381	**225160040**	-	-	
Scarabeo 4T 4V	50	2014	2014	TGG00	AP8213381	**225160040**	-	-	
Scarabeo 4T 4V Net	50	2009	2010	TGE00	AP8213381	**225160040**	-	-	
Scarabeo 4T Restyling Eu3	50	2006	2009	TGA00\TGB00	AP8213381	**225160040**	-	-	
Scarabeo Ditech	50	2001	2004	SCA00	AP8213381	**225160040**	AP8213231	**225160200**	
Scarabeo Quattro	50	2009	2009	TGE00	AP8213381	**225160040**	-	-	
Scarabeo Street	50	2005	2006	THE00	AP8213381	**225160040**	-	-	
Scarabeo Street 2T Restyling	50	2006	2009	THG00	AP8213381	**225160040**	-	-	
Sonic	50	1998	2007	PB000\TL000	AP8213383	**225160020**	-	-	
Sonic Gp	50	1998	2008	PB010\TLA00	AP8213383	**225160020**	-	-	
Sport City One 2T	50	2008	2011	SBA00\TCA00	853058	**225160180**	-	-	
Sport City One 4T	50	2008	2010	SB000\SBC00	853058	**225160180**	-	-	
Sr	50	1993	1993	GP\LB	AP8213231	**225160200**	-	-	
Sr	50	1994	1996	LF	AP8213231	**225160200**	-	-	
Sr Ditech Euro 2	50	2002	2004	RLD10	AP8213231	**225160200**	AP8213231	**225160200**	
Sr H2O Ditech E Carburatore	50	2000	2004	RLA\RLB\RLE	AP8213231	**225160200**	AP8213231	**225160200**	
Sr Iniezione E Carburatore	50	2014	2014	VFB00\VFD00\VFU00	AP8213231	**225160200**	AP8133601	**225162132**	
Sr Liquid Cooled	50	1994	1996	LC	AP8213231	**225160200**	-	-	
Sr Motard 2T	50	2012	2014	LBMC	853058	**225160180**	-	-	
Sr Motard 4T 4V	50	2013	2014	CS5	853058	**225160180**	-	-	
Sr R Factory Ie E Carburatore	50	2010	2014	VFB00\VFD00\VFU00	AP8213231	**225160200**	AP8133601	**225162132**	
Sr R Factory Motore Aprilia	50	2005	2005	VFA00	AP8213231	**225160200**	-	-	
Sr R, R Factory	50	2004	2009	VFB00\VFD00\VFJ\U	AP8213231	**225160200**	AP8133601	**225162132**	
Sr Stealth, Racing	50	1997	2000	MZ	AP8213231	**225160200**	AP8213231	**225160200**	
Sr Street	50	2003	2012	TE000\TEA00	AP8213231	**225160200**	-	-	
Sr Www	50	1997	2001	LYH00	AP8213231	**225160200**	-	-	
Scarabeo 4T	100	2001	2005	SA000\VA000	AP8213381	**225160040**	-	-	
Scarabeo 4T	100	2010	2012	VAA00\VAC00	AP8213381	**225160040**	-	-	
Scarabeo 4T	100	2014	2014	VAB00	AP8213381	**225160040**	-	-	
Scarabeo 4T Net	100	2009	2009	VAC\VAA	AP8213381	**225160040**	-	-	
Scarabeo 4T Net Eu3	100	2010	2010	ZD4VAC\ZD4VAA	AP8213381	**225160040**	-	-	
Scarabeo 4T Restyling	100	2006	2009	VAA00\VAC00	AP8213381	**225160040**	-	-	
Scarabeo Motore Minarelli	100	2000	2000	REA0	AP8213381	**225160040**	-	-	
Scarabeo Motore Yamaha	100	2000	2000	RE00	AP8213381	**225160040**	-	-	
Atlantic	125	2003	2005	SP0\SPA\SPB\SPC	AP8133606	**225162142**	AP8133601	**225162132**	
Atlantic Eu3	125	2010	2012	SPD00	AP8133606	**225162142**	AP8133601	**225162132**	
Atlantic Eu3 125-250	125	2006	2008	SPD00\SPE00	AP8133606	**225162142**	AP8133601	**225162132**	
Leonardo	125	1996	1998	MB000\MBA00	AP8113541	**225160050**	AP8213231	**225160200**	
Leonardo	125	1999	2002	MB03-6\MBA2-5	AP8113541	**225160050**	AP8213231	**225160200**	
Leonardo St	125	2001	2004	TB000\TB002	AP8113541	**225160050**	AP8213231	**225160200**	

Modello *Model*	CC	Da *From*	A *To*	Telaio *Frame*	OEM Anteriore *OEM Front*	RMS Anteriore *RMS Front*	OEM Posteriore *OEM Rear*	RMS Posteriore *RMS Rear*	Note *Notes*
Mojito	125	2003	2007	RY000\RYA00\RY010	AP8213231	**225160200**	-	-	
Mojito	125	2008	2008	SZA00	AP8213231	**225160200**	-	-	
Mojito Retro' - Custom	125	1999	2001	PM000\PM010	AP8213231	**225160200**	-	-	
Scarabeo	125	2003	2003	TD000\TDA01	AP8113697	**225160250**	AP8133627	**225162152**	
Scarabeo	125	2004	2006	TD002\TDB01	AP8113697	**225160250**	AP8133627	**225162152**	
Scarabeo Motore Piaggio Eu3	125	2006	2006	TD005\TDA03	AP8113697	**225160250**	AP8133627	**225162152**	
Scarabeo Motore Rotax	125	1999	2004	PC000\PCA00\SD000	AP8113697	**225160250**	AP8113541	**225160050**	
Sport City	125	2004	2006	VB000\VBA00	AP8113697	**225160250**	AP8113541	**225160050**	
Sport City Cube	125	2008	2010	VBE00\VBG00	AP8113697	**225160250**	AP8113541	**225160050**	
Sport City Euro3	125	2006	2008	VB002\VBA01\VBB00	AP8113697	**225160250**	AP8113541	**225160050**	
Sport City One 4T Euro3	125	2008	2011	SG000\SGC00	853058	**225160180**	-	-	
Sport City Street	125	2012	2012	VBM00	AP8113697	**225160250**	AP8113541	**225160050**	
Sr	125	1999	2001	PXA00\PXC00	AP8213231	**225160200**	-	-	
Sr Max	125	2011	2014	PM35700	56393R	**225162070**	-	-	
Sr Motard	125	2012	2014	LBMM7	853058	**225160180**	-	-	
Atlantic Eu3 125-250	250	2006	2008	SPD00\SPE00	AP8133606	**225162142**	AP8133601	**225162132**	
Leonardo	250	1999	2001	PD000	AP8113541	**225160050**	-	-	
Leonardo St	250	2001	2001	PD010	AP8113541	**225160050**	-	-	
Scarabeo Light	250	2006	2008	VRB00	AP8113697	**225160250**	-	**-**	
Sport City Cube	250	2008	2012	VBH00\VBL00	AP8113697	**225160250**	AP8113541	**225160050**	
Atlantic	300	2010	2011	SPG00	AP8133606	**225162142**	AP8133601	**225162132**	
Leonardo	300	2002	2004	SV000\SVA00	AP8113541	**225160050**	-	-	
Scarabeo Light	300	2009	2010	VRG00	AP8113697	**225160250**	-	**-**	
Sport City Street	300	2012	2012	VBR00	AP8113697	**225160250**	AP8113541	**225160050**	
Sr Max	300	2011	2014	PM35600	56393R	**225162070**	-	-	
Scarabeo Light 400-500	400	2006	2008	VR000\VRA00\VRE00	AP8113697	**225160250**	AP8133627	**225162152**	
Atlantic	500	2001	2004	PT00\VH00	AP8113697	**225160250**	-	-	
Scarabeo	500	2003	2006	RT00	AP8113697	**225160250**	-	-	
BENELLI									
491 Gt	50	1998	1999	BA0102	R43810011A0	**225160010**	-	-	
491 Racing	50	1998	1999	BA0100	R43810011A0	**225160010**	-	-	
491 Rr	50	1999	2001	BA0100	R43810011A0	**225160010**	-	-	
491 Rr Morini	50	2003	2004	ND0200P	R43810011A0	**225160010**	-	-	
491 Sp	50	1999	1999	BA0101	R43810011A0	**225160010**	-	-	
491 Sport	50	1998	1999	BA0101	R43810011A0	**225160010**	-	-	
491 St	50	1999	2001	BA0102	R43810011A0	**225160010**	-	-	
491 St Morini	50	2003	2003	ND0400P	R43810011A0	**225160010**	-	-	
K2	50	1998	2001	BA0105	R43810011A0	**225160010**	-	-	
K2 Liquid Cooled	50	1998	2001	BA0104	R43810011A0	**225160010**	-	-	
K2	100	1999	2001	M20000	R43810011A0	**225160010**	-	-	
Velvet	250	1999	2001	M70000	R43810041A0	**225162142**	-	-	
Velvet Touring	250	2002	2003	M70001P	R43810041A0	**225162142**	-	-	
Velvet	400	2003	2004	VM0000P	R43810041A0	**225162142**	-	-	
BETA									
Eikon 125 Lc	125	1999	2002	S70000	-	**225160180**	-	-	
Eikon 125 Lc	125	2003	2005	-	-	**225160180**	-	-	
Eikon 150 Lc	150	1999	2002	S7E000	-	**225160180**	-	-	
Eikon 150 Lc	150	2003	2005	-	-	**225160180**	-	-	
DERBI									
Gp1 Open Eu2	50	2006	2009	PR1B1A	56391R	**225162112**	564520	**225160140**	
Sonar 2T	50	2009	2009	LR1A1A	-	-	56391R	**225162112**	
Gp1 Low Seat 125 Eu3	125	2007	2008	PS1B1A	-	-	56391R	**225162112**	
Sonar 4T	125	2009	2011	LS1A1A	56391R	**225162112**	-	-	
Sonar 4T	150	2009	2009	LS3A1A	56391R	**225162112**	-	-	
Gp1 Low Seat 250 Eu3	250	2007	2008	PT1B1A	-	-	56391R	**225162112**	
GILERA									
Dna	50	2000	2002	C2700	564371	**225160230**	563246	**225160160**	
Dna	50	2005	2007	C2700	564371	**225160230**	563246	**225160160**	

Modello *Model*	CC	Da *From*	A *To*	Telaio *Frame*	OEM Anteriore *OEM Front*	RMS Anteriore *RMS Front*	OEM Posteriore *OEM Rear*	RMS Posteriore *RMS Rear*	Note *Notes*
Dna Gp Experience	50	2003	2004	C2700	564371	**225160230**	563246	**225160160**	
Easy Moving	50	1995	1996	SSP2T	271594	**225160020**	-	-	
Ice	50	2001	2005	C3000	563246	**225160160**	-	-	
Runner	50	1997	2000	C1400	561714	**225160180**	564520	**225160140**	
Runner Poggiali	50	2002	2002	C3620	561714	**225160180**	564520	**225160140**	
Runner Purejet	50	2002	2004	C36100	561714	**225160180**	564520	**225160140**	
Runner Purejet	50	2005	2006	C46200	56484R	**225160190**	56396R	**225160140**	
Runner Purejet	50	2005	2006	C46200	56484R	**225162112**	56396R	**225160140**	Ant. Disegno alternativo I *Front alternative design*
Runner Purejet	50	2007	2007	C46200	56391R	**225160190**	564520	**225160140**	
Runner Purejet	50	2007	2007	C46200	56391R	**225162112**	564520	**225160140**	Ant. Disegno alternativo I *Front alternative design*
Runner Purejet	50	2010	2011	C46200	56484R	**225160190**	56396R	**225160140**	
Runner Purejet	50	2010	2011	C46200	56484R	**225162112**	56396R	**225160140**	Ant. Disegno alternativo I *Front alternative design*
Runner Purejet St	50	2008	2008	C46200	56391R	**225160190**	56396R	**225160140**	
Runner Purejet St	50	2008	2008	C46200	56391R	**225162112**	56396R	**225160140**	Ant. Disegno alternativo I *Front alternative design*
Runner Sp	50	2002	2004	C3640	561714	**225160180**	564520	**225160140**	
Runner Sp	50	2005	2006	C46100	56484R	**225160190**	56396R	**225160140**	
Runner Sp	50	2005	2006	C46100	56484R	**225162112**	56396R	**225160140**	Ant. Disegno alternativo I *Front alternative design*
Runner Sp	50	2007	2007	C46100	56391R	**225160190**	56396R	**225160140**	
Runner Sp	50	2007	2007	C46100	56391R	**225162112**	56396R	**225160140**	Ant. Disegno alternativo I *Front alternative design*
Runner Sp	50	2010	2012	C46100	56391R	**225160190**	56396R	**225160140**	
Runner Sp	50	2010	2012	C46100	56391R	**225162112**	56396R	**225160140**	Ant. Disegno alternativo I *Front alternative design*
Runner Sp Special Edition	50	2007	2007	C46100	56391R	**225160190**	564520	**225160140**	
Runner Sp Special Edition	50	2007	2007	C46100	56391R	**225162112**	564520	**225160140**	Ant. Disegno alternativo I *Front alternative design*
Runner Sp St & Simoncelli	50	2008	2009	C46100	56391R	**225160190**	56396R	**225160140**	
Runner Sp St & Simoncelli	50	2008	2009	C46100	56391R	**225162112**	56396R	**225160140**	Ant. Disegno alternativo I *Front alternative design*
Stalker	50	1997	2004	C1300	272156	**225160200**	564520	**225160140**	
Stalker	50	2005	2011	C40100	56408R	**225160200**	-	-	
Stalker Special Edition	50	2007	2008	C40100	56408R	**225160200**	-	-	
Storm	50	1994	1995	TEC1T	272156	**225160200**	-	-	
Typhoon	50	1994	1997	TEC1T	272156	**225160200**	-	-	
Typhoon X	50	1998	1999	TEC2T	272156	**225160200**	-	-	
Typhoon Xr	50	2000	2000	C1900	272156	**225160200**	-	-	
Nexus Euro3	125	2007	2008	M35500	56393R	**225162070**	56498R	**225162060**	
Nexus Euro3 Ie	125	2008	2010	M35700	56393R	**225162070**	56498R	**225162060**	
Runner 4T St Euro3	125	2008	2016	M46301	56394R	**225162122**	56484R	**225160190**	
Runner Fx-Fxr 125-180	125	1997	2002	M070\080	561714	**225160180**	564371	**225160230**	
Runner Vx	125	2005	2006	M46100	649226	**225162122**	56484R	**225160190**	
Runner Vx 4T Euro3	125	2006	2007	M46300	56394R	**225162122**	56484R	**225160190**	
Runner Vx Race	125	2006	2006	M46100	601749	**225162122**	564573	**225160190**	
Runner Vx Sc	125	2006	2007	M46100	649226	**225162122**	56484R	**225160190**	
Runner Vx-Vxr 125-180	125	2000	2001	M2400	561714	**225160180**	563246	**225160160**	
Runner Vx-Vxr 125-200	125	2002	2004	M240\241\243	561714	**225160180**	563246	**225160160**	
Typhoon	125	1995	1998	M0200	272156	**225160200**	-	-	
Typhoon X-Xr	125	1999	2000	M0200	272156	**225160200**	-	-	
Dna 125-180	180	2001	2001	M2600	564371	**225160230**	-	-	
Runner Fx-Fxr 125-180	180	1997	2002	M070\080	-	-	564371	**225160230**	
Runner Vx-Vxr 125-180	180	2000	2001	M2400	561714	**225160180**	563246	**225160160**	
Runner Vxr	200	2005	2006	M46200	649226	**225162122**	56484R	**225160190**	
Runner Vxr 4T St Euro3	200	2008	2011	M46401	649226	**225162122**	56484R	**225160190**	
Runner Vxr Euro3	200	2007	2007	M46400	56394R	**225162122**	56391R	**225160190**	
Runner Vxr Race	200	2005	2006	M46200	649226	**225162122**	56484R	**225160190**	

Modello *Model*	CC	Da *From*	A *To*	Telaio *Frame*	OEM Anteriore *OEM Front*	RMS Anteriore *RMS Front*	OEM Posteriore *OEM Rear*	RMS Posteriore *RMS Rear*	Note *Notes*
Runner Vx-Vxr 125-200	200	2002	2004	M240\241\243	561714	**225160180**	564573	**225160190**	
Nexus Euro3	250	2006	2006	M35300	56393R	**225162070**	56498R	**225162060**	
Nexus Euro3	250	2007	2007	M35400	56393R	**225162070**	56498R	**225162060**	
Nexus Sp Euro3	250	2006	2007	M35300	56393R	**225162070**	56498R	**225162060**	
Nexus Euro3	300	2008	2011	M35600	56393R	**225162070**	56498R	**225162060**	
Fuoco 4T-4V Ie E3 Lt	500	2013	2014	M61100	56394R	**225162122**	56498R	**225162060**	
Fuoco Euro3	500	2007	2013	M61100	649226	**225162122**	56498R	**225162060**	
Nexus	500	2003	2005	M35100	599315	**225162070**	597520	**225162060**	
Nexus Euro3	500	2006	2011	M35200	56393R	**225162070**	56498R	**225162060**	
Nexus Sp Euro3	500	2006	2007	M35200	56393R	**225162070**	56498R	**225162060**	
HONDA									
Nsc 50 Mpd Vision 16 Inch	50	2012	2013	AF72B	45351-KZL-931	**225162640**	-	-	
Nsc 50 Mpd Vision 16 Inch	50	2014	2018	AF73B	45351-KZL-931	**225162640**	-	-	
Nsc 50 R 2Wh	50	2013	2013	AF72C1	45351-KZL-931	**225162640**	-	-	
Nsc 50 R T2	50	2014	2017	AF73C	45351-KZL-931	**225162640**	-	-	
Nsc 50 Wh Vision 14 Inch	50	2012	2013	AF72A	45351-KZL-931	**225162640**	-	-	
Sh 50 Scoopy	50	1996	2000	AF40A	45351-GBY-910ZA	**225160070**	-	-	
Sj 50 Bali	50	1995	1995	AF323	45121-GAV-700ZB	**225160210**	-	-	
Sj 50 Bali	50	1996	2001	AF32E	45121-GAV-700ZB	**225160210**	-	-	
Sh 100 Scoopy	100	1996	2001	HF08A	45351-GBY-910ZA	**225160070**	-	-	
Sh 100 Scoopy	100	2000	2000	HF08B	45351-GBY-910ZA	**225160070**	-	-	
Sj 100 Bali Ex	100	1996	2000	HF07A	45121-GAV-700ZB	**225160210**	-	-	
Afs 110 2Sh I Wave	110	2012	2014	JC51A	45351-KZL-931	**225162640**	-	-	
Afs 110 Csf I Wave	110	2015	2016	JC51B	45351-KZL-931	**225162640**	-	-	
Nhx 110 Wh Lead	110	2008	2009	JF19A	45121-GAV-700ZB	**225160210**	-	-	
Nsc 110 Mpd Vision	110	2012	2013	JF31B8	45351-KZL-931	**225162640**	-	-	
Nsc 110 Mpd Vision	110	2014	2016	JF53B	45351-KZL-931	**225162640**	-	-	
Nsc 110 Mpd Vision	110	2017	2018	JF67A	45351-KZL-931	**225162640**	-	-	
Fes 125 A S-Wing Abs	125	2007	2013	JF12B	45351-KRJ-901	**225160350**	-	-	
Fes 125 Pantheon	125	1998	2002	JF05A	45351-KRJ-901	**225160350**	-	-	
Fes 125 Pantheon Cbs	125	2003	2007	JF12A	45351-KRJ-901	**225160350**	-	-	
Fes 125 S-Wing	125	2007	2010	JF12A	45351-KRJ-901	**225160350**	-	-	
Nes 125 @/ Arobase	125	2000	2000	JF07A	45351-KGF-900	**225162200**	-	-	
Nes 125 @/ Arobase	125	2001	2003	JF07B	45351-KGF-900	**225162200**	-	-	
Nes 125 @/ Arobase	125	2004	2006	JF07A	45351-KGF-900	**225162200**	-	-	
Nss 125 Ad Forza Abs	125	2015	2016	JF60B	45351-KTW-901	**225162090**	-	-	
Pcx 125 Ww125	125	2013	2013	JF47A	45351-KVG-902	**225162640**	-	-	
Pcx 125 Ww125Ex2	125	2010	2014	JF28A	45351-KVG-902	**225162640**	-	-	
Pcx 125 Ww125Ex2	125	2015	2016	JF57A	45351-KVG-902	**225162640**	-	-	
Pcx 125 Ww125Ex2	125	2017	2017	JF64A	45351-KVG-902	**225162640**	-	-	
Pes 125 Ps I	125	2006	2013	JF17A	45351-KGF-900	**225162200**	-	-	
Ses 125 Dylan	125	2002	2006	JF10A	45351-KGF-900	**225162200**	-	-	
Sh 125	125	2001	2004	JF09A	45351-KGF-900	**225162200**	-	-	
Sh 125 A I Abs	125	2013	2015	JF41B	45351-KRJ-901	**225160350**	43251-KTF-891	**225162260**	
Sh 125 A I Abs	125	2016	2016	JF41A	45351-KRJ-901	**225160350**	43251-KTF-891	**225162260**	
Sh 125 A I Abs	125	2017	2017	-	45351-KRJ-901	**225160350**	43251-KTF-891	**225162260**	
Sh 125 Ad I Abs	125	2017	2018	JF68B	45351-KRJ-901	**225160350**	43251-KTF-891	**225162260**	
Sh 125 Anc I Mode	125	2014	2016	JF51A	45351-KVG-951	**225162640**	-	-	
Sh 125 Anc I Mode	125	2017	2018	JF71A	45351-KVG-951	**225162640**	-	-	
Sh 125 D I	125	2009	2009	JF23A	45351-KRJ-901	**225160350**	-	-	
Sh 125 I	125	2005	2008	JF14A	45351-KGF-900	**225162200**	-	-	
Sh 125 I	125	2009	2012	JF23B	45351-KRJ-901	**225160350**	43251-KTF-891	**225162260**	
Sh 125 I	125	2013	2013	JF23A	45351-KRJ-901	**225160350**	43251-KTF-891	**225162260**	
Sh 125 I	125	2016	2016	JF41A	45351-KRJ-901	**225160350**	43251-KTF-891	**225162260**	
Fes 150 A S-Wing Abs	150	2007	2009	KF06B	45351-KRJ-901	**225160350**	-	-	
Fes 150 Pantheon	150	1998	2002	KF02A	45351-KRJ-901	**225160350**	-	-	
Fes 150 Pantheon	150	2003	2005	KF06A	45351-KRJ-901	**225160350**	-	-	
Fes 150 S-Wing	150	2007	2009	KF06A	45351-KRJ-901	**225160350**	-	-	

Modello *Model*	CC	Da *From*	A *To*	Telaio *Frame*	OEM Anteriore *OEM Front*	RMS Anteriore *RMS Front*	OEM Posteriore *OEM Rear*	RMS Posteriore *RMS Rear*	Note *Notes*
Nes 150 @/ Arobase	150	2000	2000	KF03A	45351-KGF-900	**225162200**	-	-	
Nes 150 @/ Arobase	150	2001	2001	KF03B	45351-KGF-900	**225162200**	-	-	
Nes 150 @/ Arobase	150	2002	2006	KF03A	45351-KGF-900	**225162200**	-	-	
Pcx 150 Ww150	150	2012	2012	KF12A	45351-KVG-902	**225162640**	-	-	
Pcx 150 Ww150	150	2013	2013	KF15A	45351-KVG-902	**225162640**	-	-	
Pcx 150 Ww150 Ex2	150	2015	2018	KF19A	45351-KVG-902	**225162640**	-	-	
Pes 150 Ps I	150	2006	2010	KF09A	45351-KGF-900	**225162200**	-	-	
Ses 150 Dylan	150	2002	2004	KF05A	45351-KGF-900	**225162200**	-	-	
Sh 150	150	2001	2004	KF04A	45351-KGF-900	**225162200**	-	-	
Sh 150 A I Abs	150	2013	2016	KF13B	45351-KRJ-901	**225160350**	43251-KTF-891	**225162260**	
Sh 150 A I Abs	150	2017	2017	-	45351-KRJ-901	**225160350**	43251-KTF-891	**225162260**	
Sh 150 Ad I Abs	150	2017	2018	KF23A	45351-KRJ-901	**225160350**	43251-KTF-891	**225162260**	
Sh 150 D I	150	2009	2011	KF10A	45351-KRJ-901	**225160350**	-	-	
Sh 150 I	150	2005	2008	KF08A	45351-KGF-900	**225162200**	-	-	
Cb 250 F Hornet	250	1996	2001	MC31	-	-	43251-MV4-000	**225160360**	
Cb 250 F Hornet	250	1996	2001	MC31	-	-	43251-MV4-000	**225160361**	
Cbr 250 R	250	2011	2014	MC41A	-	-	43251-MV4-000	**225160360**	
Cbr 250 R	250	2011	2014	MC41A	-	-	43251-MV4-000	**225160361**	
Fes 250 Foresight	250	1998	1999	MF04A	45351-KRJ-901	**225160350**	-	-	
Fes 250 Foresight	250	2000	2005	MF05A	45351-KRJ-901	**225160350**	43251-MV4-000	**225160360**	
Fes 250 Foresight	250	2000	2005	MF05A	45351-KRJ-901	**225160350**	43251-MV4-000	**225160361**	
Nss 250 A Forza Abs	250	2008	2011	MF10B	45351-KRJ-901	**225160350**	-	-	
Nss 250 A Jazz Abs	250	2001	2004	MF06B	45351-KRJ-901	**225160350**	43251-MV4-000	**225160360**	
Nss 250 A Jazz Abs	250	2001	2004	MF06B	45351-KRJ-901	**225160350**	43251-MV4-000	**225160361**	
Nss 250 Ex Forza Abs	250	2005	2013	MF08B	45351-KRJ-901	**225160350**	-	-	
Nss 250 Jazz	250	2001	2001	MF06A	45351-KRJ-901	**225160350**	43251-MV4-000	**225160360**	
Nss 250 Jazz	250	2001	2001	MF06A	45351-KRJ-901	**225160350**	43251-MV4-000	**225160361**	
Nss 250 Jazz	250	2003	2004	MF07A	45351-KRJ-901	**225160350**	43251-MV4-000	**225160360**	
Nss 250 Jazz	250	2003	2004	MF07A	45351-KRJ-901	**225160350**	43251-MV4-000	**225160361**	
Nss 250 Jazz Es	250	2001	2004	MF07A	45351-KRJ-901	**225160350**	43251-MV4-000	**225160360**	
Nss 250 Jazz Es	250	2001	2004	MF07A	45351-KRJ-901	**225160350**	43251-MV4-000	**225160361**	
Nss 250 X Forza	250	2005	2013	MF08A	45351-KRJ-901	**225160350**	-	-	
Vtr 250	250	1997	1999	MC33	-	-	43251-MV4-000	**225160360**	
Vtr 250	250	1997	1999	MC33	-	-	43251-MV4-000	**225160361**	
Sh 300 A I Abs	300	2007	2010	NF02B	45351-KTW-901	**225162090**	43251-KTW-901	**225162100**	
Sh 300 A I Abs	300	2011	2015	NF02D	45351-KTW-901	**225162090**	43251-KTW-901	**225162100**	
Sh 300 I	300	2008	2010	NF02A	45351-KTW-901	**225162090**	43251-KTW-901	**225162100**	
Cbr 400 Rr	400	1990	1999	NC29	-	-	43251-MV4-000	**225160360**	
Cbr 400 Rr	400	1990	1999	NC29	-	-	43251-MV4-000	**225160361**	
Cb 600 F Hornet	600	1998	2001	PC34A	-	-	43251-MV4-000	**225160360**	
Cb 600 F Hornet	600	1998	2001	PC34B	-	-	43251-MV4-000	**225160360**	
Cb 600 F Hornet	600	1998	2001	PC34D	-	-	43251-MV4-000	**225160360**	
Cb 600 F Hornet	600	1998	2001	PC34A	-	-	43251-MV4-000	**225160361**	
Cb 600 F Hornet	600	1998	2001	PC34B	-	-	43251-MV4-000	**225160361**	
Cb 600 F Hornet	600	1998	2001	PC34D	-	-	43251-MV4-000	**225160361**	
Cb 600 F Hornet	600	2002	2004	PC36B	-	-	43251-MV4-000	**225160360**	
Cb 600 F Hornet	600	2002	2004	PC36B	-	-	43251-MV4-000	**225160361**	
Cb 600 F Hornet	600	2002	2006	PC36A	-	-	43251-MV4-000	**225160360**	
Cb 600 F Hornet	600	2002	2006	PC36D	-	-	43251-MV4-000	**225160360**	
Cb 600 F Hornet	600	2002	2006	PC36A	-	-	43251-MV4-000	**225160361**	
Cb 600 F Hornet	600	2002	2006	PC36D	-	-	43251-MV4-000	**225160361**	
Cb 600 S F2 Hornet S	600	2000	2001	PC34E	-	-	43251-MV4-000	**225160360**	
Cb 600 S F2 Hornet S	600	2000	2001	PC34F	-	-	43251-MV4-000	**225160360**	
Cb 600 S F2 Hornet S	600	2000	2001	PC34H	-	-	43251-MV4-000	**225160360**	
Cb 600 S F2 Hornet S	600	2000	2001	PC34E	-	-	43251-MV4-000	**225160361**	
Cb 600 S F2 Hornet S	600	2000	2001	PC34F	-	-	43251-MV4-000	**225160361**	
Cb 600 S F2 Hornet S	600	2000	2001	PC34H	-	-	43251-MV4-000	**225160361**	
Cb 600 S F2 Hornet S	600	2002	2003	PC36E	-	-	43251-MV4-000	**225160360**	

Modello *Model*	CC	Da *From*	A *To*	Telaio *Frame*	OEM Anteriore *OEM Front*	RMS Anteriore *RMS Front*	OEM Posteriore *OEM Rear*	RMS Posteriore *RMS Rear*	Note *Notes*
Cb 600 S F2 Hornet S	600	2002	2003	PC36F	-	-	43251-MV4-000	**225160360**	
Cb 600 S F2 Hornet S	600	2002	2003	PC36H	-	-	43251-MV4-000	**225160360**	
Cb 600 S F2 Hornet S	600	2002	2003	PC36E	-	-	43251-MV4-000	**225160361**	
Cb 600 S F2 Hornet S	600	2002	2003	PC36F	-	-	43251-MV4-000	**225160361**	
Cb 600 S F2 Hornet S	600	2002	2003	PC36H	-	-	43251-MV4-000	**225160361**	
Cbr 600 F	600	1991	1994	PC25	-	-	43251-MV4-000	**225160360**	
Cbr 600 F	600	1991	1994	PC25	-	-	43251-MV4-000	**225160361**	
Cbr 600 F	600	1995	1995	PC31	-	-	43251-MV4-000	**225160360**	
Cbr 600 F	600	1995	1995	PC31	-	-	43251-MV4-000	**225160361**	
Cbr 600 F	600	1996	1998	PC31B	-	-	43251-MV4-000	**225160360**	
Cbr 600 F	600	1996	1998	PC31C	-	-	43251-MV4-000	**225160360**	
Cbr 600 F	600	1996	1998	PC31E	-	-	43251-MV4-000	**225160360**	
Cbr 600 F	600	1996	1998	PC31B	-	-	43251-MV4-000	**225160361**	
Cbr 600 F	600	1996	1998	PC31C	-	-	43251-MV4-000	**225160361**	
Cbr 600 F	600	1996	1998	PC31E	-	-	43251-MV4-000	**225160361**	
Cbr 600 F	600	1999	2000	PC35A	-	-	43251-MV4-000	**225160360**	
Cbr 600 F	600	1999	2000	PC35D	-	-	43251-MV4-000	**225160360**	
Cbr 600 F	600	1999	2000	PC35A	-	-	43251-MV4-000	**225160361**	
Cbr 600 F	600	1999	2000	PC35D	-	-	43251-MV4-000	**225160361**	
Cbr 600 F	600	2001	2007	PC35F	-	-	43251-MV4-000	**225160360**	
Cbr 600 F	600	2001	2007	PC35F	-	-	43251-MV4-000	**225160361**	
Cbr 600 Fr Rossi	600	2001	2002	PC35H	-	-	43251-MV4-000	**225160360**	
Cbr 600 Fr Rossi	600	2001	2002	PC35H	-	-	43251-MV4-000	**225160361**	
Cbr 600 Fs Sport	600	2001	2002	PC35H	-	-	43251-MV4-000	**225160360**	
Cbr 600 Fs Sport	600	2001	2002	PC35H	-	-	43251-MV4-000	**225160361**	
Cbr 600 Rr	600	2003	2006	PC37B	-	-	43251-MV4-000	**225160360**	
Cbr 600 Rr	600	2003	2006	PC37B	-	-	43251-MV4-000	**225160361**	
Cbr 600 Rr	600	2004	2005	PC37A	-	-	43251-MV4-000	**225160360**	
Cbr 600 Rr	600	2004	2005	PC37A	-	-	43251-MV4-000	**225160361**	
Cbr 600 Rr	600	2007	2008	PC40A	-	-	43251-MV4-000	**225160360**	
Cbr 600 Rr	600	2007	2008	PC40A	-	-	43251-MV4-000	**225160361**	
Cbr 600 Rr	600	2009	2016	PC40C	-	-	43251-MV4-000	**225160360**	
Cbr 600 Rr	600	2009	2016	PC40C	-	-	43251-MV4-000	**225160361**	
Cb 650 F	650	2016	2016	RC75A	45251-MGS-D81	**225162540**	-	-	
Cb 650 Fa Abs	650	2014	2015	RC75C	45251-MGS-D81	**225162540**	-	-	
Cb 650 Fa Abs	650	2014	2016	RC75B	45251-MGS-D81	**225162540**	-	-	
Cb 650 Fa Abs	650	2017	2017	RC97A	45251-MGS-D81	**225162540**	-	-	
Cbr 650 Fa Abs	650	2014	2015	RC74C	45251-MGS-D81	**225162540**	-	-	
Cbr 650 Fa Abs	650	2014	2016	RC74B	45251-MGS-D81	**225162540**	-	-	
Cbr 650 Fa Abs	650	2017	2017	RC96A	45251-MGS-D81	**225162540**	-	-	
Ctx 700 D Dct Halbverkleidung Abs	700	2014	2017	RC69C	45251-MGS-D81	**225162540**	43251-MGS-D31	**225162550**	
Ctx 700 Nd Dct Lenkerverkleidung Abs	700	2014	2016	RC68C	-	-	43251-MGS-D31	**225162550**	
Nc 700 D Integra Dct Abs	700	2012	2012	RC62B	45251-MGS-D81	**225162540**	43251-MGS-D31	**225162550**	
Nc 700 D Integra Dct Abs	700	2012	2013	RC62A	45251-MGS-D81	**225162540**	43251-MGS-D31	**225162550**	
Nc 700 S	700	2012	2014	RC61B	-	-	43251-MGS-D31	**225162550**	
Nc 700 Sa Abs	700	2012	2014	RC61A	45251-MGS-D81	**225162540**	43251-MGS-D31	**225162550**	
Nc 700 Sa Abs	700	2012	2014	RC61C	45251-MGS-D81	**225162540**	43251-MGS-D31	**225162550**	
Nc 700 Sd Dct Abs	700	2012	2014	RC61D	45251-MGS-D81	**225162540**	43251-MGS-D31	**225162550**	
Nc 700 X	700	2012	2014	RC63A	-	-	43251-MGS-D31	**225162550**	
Nc 700 X	700	2012	2014	RC63C	-	-	43251-MGS-D31	**225162550**	
Nc 700 Xa Abs	700	2012	2014	RC63B	45251-MGS-D81	**225162540**	43251-MGS-D31	**225162550**	
Nc 700 Xa Abs	700	2012	2014	RC63E	45251-MGS-D81	**225162540**	43251-MGS-D31	**225162550**	
Nc 700 Xd Dct Abs	700	2012	2014	RC63D	45251-MGS-D81	**225162540**	43251-MGS-D31	**225162550**	
Nc 700 Xd Dct Abs	700	2013	2014	RC63F	45251-MGS-D81	**225162540**	43251-MGS-D31	**225162550**	
Nc 750 D Integra Dct Abs	750	2014	2015	RC71A	45251-MGS-D81	**225162540**	43251-MGS-D31	**225162550**	
Nc 750 D Integra Dct Abs	750	2016	2017	RC89A	45251-MGS-D81	**225162540**	43251-MGS-D31	**225162550**	

Modello *Model*	CC	Da *From*	A *To*	Telaio *Frame*	OEM Anteriore *OEM Front*	RMS Anteriore *RMS Front*	OEM Posteriore *OEM Rear*	RMS Posteriore *RMS Rear*	Note *Notes*
Nc 750 Sa Abs	750	2014	2015	RC70B	45251-MGS-D81	**225162540**	43251-MGS-D31	**225162550**	
Nc 750 Sa Abs	750	2016	2017	RC88A	45251-MGS-D81	**225162540**	43251-MGS-D31	**225162550**	
Nc 750 Sd Dct Abs	750	2014	2015	RC70C	45251-MGS-D81	**225162540**	43251-MGS-D31	**225162550**	
Nc 750 Sd Dct Abs	750	2016	2017	RC88B	45251-MGS-D81	**225162540**	43251-MGS-D31	**225162550**	
Nc 750 Xa Abs	750	2014	2015	RC72B	45251-MGS-D81	**225162540**	43251-MGS-D31	**225162550**	
Nc 750 Xa Abs	750	2016	2017	RC90A	45251-MGS-D81	**225162540**	43251-MGS-D31	**225162550**	
Nc 750 Xd Dct Abs	750	2014	2015	RC72C	45251-MGS-D81	**225162540**	43251-MGS-D31	**225162550**	
Nc 750 Xd Dct Abs	750	2016	2017	RC90B	45251-MGS-D81	**225162540**	43251-MGS-D31	**225162550**	
Cbr 900 Rr Fireblade	900	1992	1995	SC28	-	-	43251-MV4-000	**225160360**	
Cbr 900 Rr Fireblade	900	1996	1999	SC33D	-	-	43251-MV4-000	**225160360**	
Cbr 900 Rr Fireblade	900	1997	1999	SC33A	-	-	43251-MV4-000	**225160360**	
Cbr 900 Rr Fireblade	900	2000	2001	SC44B	-	-	43251-MV4-000	**225160360**	
Cbr 900 Rr Fireblade	900	2002	2003	SC50B	-	-	43251-MV4-000	**225160360**	
Cbr 1000 Rr Fireblade	1000	2004	2005	SC57B	-	-	43251-MV4-000	**225160360**	
Cbr 1000 Rr Fireblade	1000	2004	2007	SC57A	-	-	43251-MV4-000	**225160360**	
Cbr 1000 Rrs Fireblade Edition	1000	2007	2007	SC57D	-	-	43251-MV4-000	**225160360**	
Vtr 1000 F Fire Storm	1000	1997	2000	SC36D	-	-	43251-MV4-000	**225160360**	
Vtr 1000 F Fire Storm	1000	1997	2004	SC36B	-	-	43251-MV4-000	**225160360**	
Vtr 1000 F Fire Storm	1000	2001	2002	SC36A	-	-	43251-MV4-000	**225160360**	
Vtr 1000 F Fire Storm	1000	2003	2006	SC36C	-	-	43251-MV4-000	**225160360**	
Vtr 1000 Sp1	1000	2000	2001	SC45A	-	-	43251-MV4-000	**225160360**	
Vtr 1000 Sp2	1000	2002	2006	SC45A	-	-	43251-MV4-000	**225160360**	
KYMCO									
Agility 2T R16	50	2010	2010	C11000	00145010	**225162210**	-	-	
Agility 2T R16	50	2012	2012	C11000	00145010	**225162210**	-	-	
Agility 4T R16	50	2008	2009	C10000	00145010	**225162210**	-	-	
Agility 4T R16	50	2012	2012	C10000	00145010	**225162210**	-	-	
Agility Plus 2T	50	2014	2014	13000	00145010	**225162210**	-	-	
Agility Plus 4T	50	2014	2014	12000	00145010	**225162210**	-	-	
Agility Rs	50	2009	2009	U600B0	00145095	**225162250**	-	-	
Agility Rs Naked 2T	50	2010	2010	U10000	00145128	**225162250**	-	-	
Like 2T	50	2009	2009	D10000	00145106	**225162610**	-	-	
Like 4T	50	2009	2009	D11000	00145106	**225162610**	-	-	
People S	50	2005	2008	B90000	00145010	**225162210**	-	-	
People S 4T	50	2006	2008	B91000	00145010	**225162210**	-	-	
Super 8	50	2007	2007	U70000	00145000	**225162360**	-	-	
Super 8 2T	50	2009	2009	U90000	00145000	**225162360**	-	-	
Super 8 4T	50	2009	2009	U70300	00145000	**225162360**	-	-	
Agility Carry Euro4	125	2017	2017	B2565	00145106	**225162610**	00143081	**225162600**	
Agility Plus	125	2014	2014	C21000	00145010	**225162210**	00143057	**225162220**	
Agility Plus E4	125	2016	2016	C41000	00145010	**225162210**	00143057	**225162220**	
Agility R16	125	2008	2009	C20000	00145010	**225162210**	00143057	**225162220**	
Agility R16	125	2012	2012	C20000	00145010	**225162210**	00143057	**225162220**	
Agility Rs	125	2009	2009	U62011	00145095	**225162250**	-	-	
Downtown 125I	125	2009	2016	V21000	00145090	**225162290**	00143068	**225162230**	
Downtown E4	125	2016	2016	V21111	00145090	**225162290**	-	-	
G-Dink	125	2012	2012	V51000	-	-	00143081	**225162600**	
K-Xct I	125	2012	2014	D81000	00145090	**225162290**	-	-	
Like	125	2009	2009	D20000	00145106	**225162610**	00143081	**225162600**	
Like Euro4	125	2017	2017	DB2505	00145106	**225162610**	00143081	**225162600**	
Like Lx	125	2012	2012	D20000	00145106	**225162610**	00143081	**225162600**	
People Gti	125	2010	2010	V41000	00143120	**225162310**	00143120	**225162310**	
People Gti	125	2014	2014	V41000	00143120	**225162310**	00143120	**225162310**	
People One E4	125	2016	2016	D42000	00145246	**225162410**	00143081	**225162600**	
People One I	125	2013	2013	D40000	00145246	**225162410**	-	-	
People One I Dd	125	2015	2015	40000	00145246	**225162410**	00143081	**225162600**	
People S	125	2005	2005	D10000	00145010	**225162210**	-	-	
People S Dd Euro3	125	2007	2008	D10000	00145010	**225162210**	00156320	**225162320**	

Modello *Model*	CC	Da *From*	A *To*	Telaio *Frame*	OEM Anteriore *OEM Front*	RMS Anteriore *RMS Front*	OEM Posteriore *OEM Rear*	RMS Posteriore *RMS Rear*	Note *Notes*
People S I Abs	125	2017	2017	T125B4	00145010	**225162210**	00143057	**225162220**	
Super 8	125	2008	2009	U80100	00145000	**225162360**	-	-	
Agility R16	150	2008	2009	C30000	00145010	**225162210**	00143057	**225162220**	
Agility R16 Plus E4	150	2016	2016	C42000	00145010	**225162210**	00143057	**225162220**	
Like Euro4	150	2017	2017	130B4	00145106	**225162610**	00143081	**225162600**	
People S I Abs	150	2017	2017	T030B4	00145010	**225162210**	00143057	**225162220**	
Agility 200I R16	200	2010	2010	C31000	00145010	**225162210**	00143057	**225162220**	
Agility I Plus	200	2014	2014	C32000	00145010	**225162210**	00143057	**225162220**	
Agility R16	200	2012	2012	C31000	00145010	**225162210**	00143057	**225162220**	
Downtown I	200	2010	2010	V22000	00145090	**225162290**	00143068	**225162230**	
Like 200I	200	2009	2009	D21000	00145106	**225162610**	00143081	**225162600**	
Like Lx	200	2012	2012	D21000	00145106	**225162610**	00143081	**225162600**	
People Gti	200	2010	2010	V42000	00143120	**225162310**	00143120	**225162310**	
People Gti	200	2014	2014	V42000	00143120	**225162310**	00143120	**225162310**	
People S	200	2005	2005	D11000	00145010	**225162210**	-	-	
People S 200I	200	2007	2007	D12000	00145010	**225162210**	00156320	**225162320**	
People Lc	250	2003	2004	B50000	00156320	**225162320**	00156320	**225162320**	
People S	250	2006	2006	D20000	00145010	**225162210**	00156320	**225162320**	Anteriore - Sinistro I *Front - Left*
People S	250	2006	2006	D20000	00156320	**225162320**	00156320	**225162320**	Anteriore - Destro I *Front - right*
People S 250I	250	2007	2007	D21000	00145010	**225162210**	00156320	**225162320**	Anteriore - Sinistro I *Front - Left*
People S 250I	250	2007	2007	D21000	00156320	**225162320**	00156320	**225162320**	Anteriore - Destro I *Front - right*
Downtown 300I	300	2009	2009	V20000	00145090	**225162290**	00143068	**225162230**	
Downtown Abs	300	2010	2010	V20010	00145121	**225162300**	00143088	**225162240**	
Downtown Abs I	300	2011	2016	V20030	00145121	**225162300**	00143088	**225162240**	
Downtown I	300	2011	2011	V20020	00145090	**225162290**	00143068	**225162230**	
G-Dink	300	2012	2012	V50010	-	-	00143081	**225162600**	
G-Dink I Abs E4	300	2017	2017	W20000	-	-	00143081	**225162600**	
K-Xct I	300	2012	2012	D80000	00145090	**225162290**	-	-	
K-Xct I Abs	300	2014	2014	D8000100	00145121	**225162300**	-	-	
People Gti	300	2010	2010	V40000	00143120	**225162310**	00143120	**225162310**	
People Gti	300	2011	2014	V40020	00143120	**225162310**	00143120	**225162310**	
People Gti Abs	300	2012	2014	V40010	00143120	**225162310**	00143120	**225162310**	
People Gti Abs E4	300	2016	2016	C80000	00143120	**225162310**	00143120	**225162310**	
People S 300I	300	2008	2008	D22000	00145010	**225162210**	00156320	**225162320**	Anteriore - Sinistro I *Front - Left*
People S 300I	300	2008	2008	D22000	00156320	**225162320**	00156320	**225162320**	Anteriore - Destro I *Front - right*
Downtown Abs E4	350	2016	2016	C71000	00145090	**225162290**	-	-	
Downtown I Abs	350	2015	2015	V23010	00145090	**225162290**	-	-	
X Citing I	400	2013	2013	D60000	-	-	00143197	**225162482**	
X Citing I	400	2015	2015	D60000	-	-	00143197	**225162482**	
X Citing I Abs	400	2014	2015	D60010	-	-	00143197	**225162482**	
X Citing I Abs E4	400	2016	2016	D61010	-	-	00143197	**225162482**	
MALAGUTI									
Ciak Td	50	2000	2001	5200000	-	-	11950400	**225160010**	
Crosser Cr1	50	1995	1998	43	11943000	**225160010**	-	-	
F10 Ac	50	2008	2008	880201	11939800	**225160120**	-	-	
F10 Ac Eco	50	2009	2010	88003	11939800	**225160120**	-	-	
F10 Jet Line	50	1992	1998	35	11939800	**225160120**	-	-	
F10 Kat	50	1999	2000	48	11939800	**225160120**	-	-	
F10 Restyling Eu1	50	2001	2002	48	11939800	**225160120**	-	-	
F10 Restyling Eu2-2.3	50	2003	2004	48\48000	11939800	**225160120**	-	-	
F10 Restyling Euro2	50	2002	2003	48000	11939800	**225160120**	-	-	
F10 Restyling Euro2	50	2006	2006	48000	11939800	**225160120**	-	-	
F12 Aria Restyling Euro 2	50	2006	2006	46000	11946500	**225160240**	-	-	
F12 Lc Restyling Euro 2	50	2006	2006	62000	11946500	**225160240**	11943000	**225160010**	
F12 Phantom	50	1994	1998	40	11943000	**225160010**	-	-	
F12 Phantom Euro1	50	1999	2000	4600000	11946500	**225160240**	-	-	
F12 Phantom Lc	50	1994	1998	41	11943000	**225160010**	-	-	
F12 Phantom Lc Euro1	50	1999	2000	4700000	11946500	**225160240**	11943000	**225160010**	

Modello *Model*	CC	Da *From*	A *To*	Telaio *Frame*	OEM Anteriore *OEM Front*	RMS Anteriore *RMS Front*	OEM Posteriore *OEM Rear*	RMS Posteriore *RMS Rear*	Note *Notes*
F12 Phantom Lc Restyling Eu1	50	2001	2002	4700000	11946500	**225160240**	11943000	**225160010**	
F12 Phantom Lc Restyling Eu2	50	2002	2002	6200000	11946500	**225160240**	11943000	**225160010**	
F12 Phantom Lc Restyling Eu2-2.3	50	2003	2004	6200000	11946500	**225160240**	11943000	**225160010**	
F12 Phantom Lc Twin Disks	50	1998	1998	41	11943000	**225160010**	11943000	**225160010**	
F12 Phantom Restyling Eu1	50	2001	2002	4600000	11946500	**225160240**	-	-	
F12 Phantom Restyling Eu2	50	2002	2002	4600000	11946500	**225160240**	-	-	
F12 Phantom Restyling Eu2-2.3	50	2003	2004	4600000	11946500	**225160240**	-	-	
F15 Fire Fox	50	1996	1998	44	11943000	**225160010**	-	-	
F15 Fire Fox Air Cooled	50	2005	2006	73K20173	11946500	**225160240**	-	-	
F15 Fire Fox Euro2	50	2002	2003	44	11946500	**225160240**	11943000	**225160010**	
F15 Fire Fox Restyling Euro2-2.3	50	2003	2004	44	11946500	**225160240**	11943000	**225160010**	
F15 Fire Fox Twin Disks & Special	50	1998	1999	44	11943000	**225160010**	11943000	**225160010**	
F15 Fire Fox Twin Disks Digit Kat	50	1998	2000	4400000	11946500	**225160240**	11943000	**225160010**	
F15 Lc Restyling Euro 2	50	2004	2005	44000044	11946500	**225160240**	11943000	**225160010**	
F15 Lc-Tds Restyling Euro 1	50	2001	2001	4400000	11946500	**225160240**	11943000	**225160010**	
Yesterday - Yesterday Euro	50	1997	2000	45	11939800	**225160120**	-	-	
Ciak	100	1999	2000	510000	-	-	11950400	**225160010**	
F12 Phantom	100	1999	2000	500000	11946500	**225160240**	11943000	**225160010**	
MBK									
Cr Z Target	50	1991	1995	3GF2	2NA258310000	**225160020**	-	-	
Cw Booster	50	2001	2002	5NT	4VUF582T0000	**225160130**	-	-	
Cw Booster	50	2004	2004	5WW2	4VUF582T0000	**225160130**	-	-	
Cw Booster Naked	50	2003	2003	1D12	4VUF582T0000	**225160130**	-	-	
Cw Booster Spirit (Ita)	50	1999	1999	4VU9	4VUF582T0000	**225160130**	-	-	
Cw Booster Spirit (Ita)	50	2000	2000	5LE\5MM	4VUF582T0000	**225160130**	-	-	
Cw Booster Spirit Euro2	50	2002	2002	5RH2	4VUF582T0000	**225160130**	-	-	
Cw Booster Spirit Euro2	50	2003	2003	5XW\5XX	4VUF582T0000	**225160130**	-	-	
Cw L Booster	50	2001	2003	5SX	4VUF582T0000	**225160130**	-	-	
Cw L Booster Spirit	50	2003	2003	5XY2\5YA2	4VUF582T0000	**225160130**	-	-	
Cw R Booster Road (Ita)	50	1994	1995	4PA1	2NA258310000	**225160020**	-	-	
Cw Rs Booster Ng	50	2001	2002	5NU	5JHF58310000	**225160210**	-	-	
Cw Rs Booster Ng	50	2003	2003	1B02	5JHF58310000	**225160210**	-	-	
Cw Rs Booster Ng (Ita)	50	1999	1999	5FX2	5JHF58310000	**225160210**	-	-	
Cw Rs Booster Ng Euro1	50	1999	2000	5LF	5JHF58310000	**225160210**	-	-	
Cw Sp Booster Spirit Euro2	50	2002	2002	5RY2	4VUF582T0000	**225160130**	-	-	
Ew Stunt	50	2000	2002	5LH	5JHF58310000	**225160210**	-	-	
Ya R Forte (Che-Ita)	50	1994	1996	4PC	5SUF582T0000	**225160020**	-	-	
Ye Evolis (Ita)	50	1992	1995	4EF	2NA258310000	**225160020**	-	-	
Ym Fizz (Ita)	50	1994	1995	4KH	2NA258310000	**225160020**	-	-	
Yn R Ovetto (Che-Ita)	50	1997	2001	5AD\5MR	5ADF58310000	**225160200**	-	-	
Yn R Ovetto Euro1	50	2002	2004	5RN	5ADF58310000	**225160200**	-	-	
Yn R Ovetto Euro2	50	2002	2003	5RN	5ADF58310000	**225160200**	-	-	
Yq L Nitro Jaguar	50	2004	2004	5SB9	5JHF58310000	**225160210**	5JHF58310000	**225160210**	
Yq Nitro	50	2001	2002	5PE	5JHF58310000	**225160210**	5JHF58310000	**225160210**	
Yq Nitro	50	2004	2004	5SB	5JHF58310000	**225160210**	5JHF58310000	**225160210**	
Yq Nitro (Ita)	50	1997	1998	5BR	5JHF58310000	**225160210**	5JHF58310000	**225160210**	
Yq Nitro (Ita)	50	1999	2000	5LC	5JHF58310000	**225160210**	5JHF58310000	**225160210**	
Yq Nitro Euro2	50	2003	2003	5SB	5JHF58310000	**225160210**	5JHF58310000	**225160210**	
Yn Ovetto	100	2000	2002	5KK	5ADF58310000	**225160200**	-	-	
Yq Nitro	100	2000	2002	5ME	5JHF58310000	**225160210**	-	-	
Yp Skyliner	250	2000	2001	5GM	4HC2582T0000	**225162330**	5GM2582W0000	**225160300**	
Yp Skyliner	250	2002	2003	5SJ	4HC2582T0000	**225162330**	5GM2582W0000	**225160300**	
Yp Skyliner Abs	250	2003	2003	5SJ7	4HC2582T0000	**225162330**	5GM2582W0000	**225160300**	

Modello *Model*	CC	Da *From*	A *To*	Telaio *Frame*	OEM Anteriore *OEM Front*	RMS Anteriore *RMS Front*	OEM Posteriore *OEM Rear*	RMS Posteriore *RMS Rear*	Note *Notes*
PEUGEOT									
Jet Force 50 C-Tech	50	2005	2014	VGA A1AAAA	766424	**225162191**	-	-	
Jet Force 50 C-Tech Rally Victories	50	2006	2007	VGA A1AAAA	766424	**225162191**	-	-	
Jet Force 50 C-Tech Rcup	50	2007	2009	VGA A1AABA	766424	**225162191**	-	-	
Jet Force 50 Darkside	50	2008	2015	VGA A1AABA	766424	**225162191**	-	-	
Jet Force 50 Ice Blade	50	2010	2013	VGA A1AABA	766424	**225162191**	-	-	
Jet Force 50 Tsdi	50	2003	2007	VGA A1AAJA	766424	**225162191**	-	-	
Jet Force 50 Tsdi Sbc	50	2003	2006	VGA A1AAJB	766424	**225162191**	-	-	
Looxor 50 2T	50	2001	2006	-	-	-	746302	**225162182**	
Tkr 50 Wrc 307	50	2005	2005	VGA S1AADA/AAGA	746302	**225162182**	-	-	
Trekker 50	50	1998	2000	-	746302	**225162182**	-	-	
Vivacity 50 2 Compact	50	2005	2007	-	746302	**225162182**	-	-	
Looxor 100 2T	100	2001	2002	-	-	-	746302	**225162182**	
Trekker 100 Road	100	1998	2000	VGA S2AA	746302	**225162182**	-	-	
Vivacity 100	100	1999	2002	VGA S2AC	746302	**225162182**	-	-	
Vivacity 100	100	2003	2004	VGA S2ACK	746302	**225162182**	-	-	
Vivacity 100	100	2005	2007	VGA S2ACL	746302	**225162182**	-	-	
Geopolis 125 Ie Executive Abs	125	2007	2007	VGA N2AAAA	771184	**225162452**	771049	**225162461**	
Geopolis 125 Ie Executive Abs	125	2008	2010	VGA N2AABA	771184	**225162452**	771049	**225162461**	
Geopolis 125 Ie Premium	125	2007	2007	VGA N2AAAA	771184	**225162452**	771049	**225162461**	
Geopolis 125 Ie Premium	125	2008	2012	VGA N2AABA	771184	**225162452**	771049	**225162461**	
Geopolis 125 Rs Ie Premium	125	2007	2007	VGA N2AAAA	771184	**225162452**	771049	**225162461**	
Geopolis 125 Rs Ie Premium	125	2008	2011	VGA N2AABA	771184	**225162452**	771049	**225162461**	
Satelis 1 125 Ie Executive Abs	125	2007	2007	VGA J2AAAA	771184	**225162452**	-	-	
Satelis 1 125 Ie Executive Abs	125	2008	2012	VGA J2AABA	771184	**225162452**	-	-	
Satelis 1 125 Ie K15 Black Sat Compressor Abs	125	2008	2012	VGA J2ABAA	771184	**225162452**	-	-	
Satelis 1 125 Ie K15 Black Sat Premium Compressor	125	2007	2012	VGA J2ABAA	771184	**225162452**	-	-	
Satelis 1 125 Ie K15 Executive Compressor Abs	125	2007	2012	VGA J2ABAA	771184	**225162452**	-	-	
Satelis 1 125 Ie K15 Premium Compressor	125	2007	2012	VGA J2ABAA	771184	**225162452**	-	-	
Satelis 1 125 Ie K15 White Sat Compressor	125	2010	2012	VGA J2ABAA	771184	**225162452**	-	-	
Satelis 1 125 Ie K15 White Sat Compressor Abs	125	2010	2012	VGA J2ABAA	771184	**225162452**	-	-	
Satelis 1 125 Ie K20 Executive Compressor Abs	125	2007	2009	VGA J2ACAA	771184	**225162452**	-	-	
Satelis 1 125 Ie K20 Premium Compressor	125	2007	2009	VGA J2ACAA	771184	**225162452**	-	-	
Satelis 1 125 Ie Premium	125	2006	2007	VGA J2AAAA	771184	**225162452**	-	-	
Satelis 1 125 Ie Premium	125	2008	2012	VGA J2AABA	771184	**225162452**	-	-	
Geopolis 250 Ie Evolution Urban Abs	250	2010	2011	VGA N2ADAA	771184	**225162452**	-	-	
Geopolis 250 Ie Executive Abs	250	2007	2009	VGA N2ADAA	771184	**225162452**	-	-	
Geopolis 250 Ie Premium	250	2006	2011	VGA N2ADAA	771184	**225162452**	-	-	
Geopolis 250 Ie Rs Premium	250	2007	2011	VGA N2ADAA	771184	**225162452**	-	-	
Geopolis 300 Ie Geostyle	300	2011	2012	-	771184	**225162452**	769432	**225162570**	
Geopolis 300 Ie Premium	300	2010	2013	-	771184	**225162452**	769432	**225162570**	
Geopolis 300 Ie Rs Premium	300	2010	2013	-	771184	**225162452**	769432	**225162570**	
New Geopolis 300 Ie	300	2015	2015	-	771184	**225162452**	-	-	
Geopolis 400 Ie Evolution Urban Abs	400	2010	2012	VGA N2AEAA	771184	**225162452**	770503	**225162442**	
Geopolis 400 Ie Executive Abs	400	2007	2009	VGA N2AEAA	771184	**225162452**	770503	**225162442**	
Geopolis 400 Ie Premium	400	2007	2012	VGA N2AEAA	771184	**225162452**	770503	**225162442**	
Geopolis 400 Ie Rs Premium	400	2008	2012	VGA N2AEAA	771184	**225162452**	770503	**225162442**	
Geopolis 500 Premium	500	2008	2012	VGA N2AFFA	771184	**225162452**	770503	**225162442**	

Modello *Model*	CC	Da *From*	A *To*	Telaio *Frame*	OEM Anteriore *OEM Front*	RMS Anteriore *RMS Front*	OEM Posteriore *OEM Rear*	RMS Posteriore *RMS Rear*	Note *Notes*
PIAGGIO									
Fly 2T	50	2005	2007	C44100	56395R	**225160160**	-	-	
Fly 2T	50	2010	2011	C44700	56395R	**225160160**	-	-	
Fly 4T	50	2005	2007	C44200	563246	**225160160**	-	-	
Fly 4T & 25-30 Km/H	50	2008	2011	C44500	56395R	**225160160**	-	-	
Fly 4T 2V	50	2013	2015	RP8C523	666761	**225162401**	-	-	
Fly 4T 2V 25-30Km-H	50	2012	2017	RP8C522	666761	**225162401**	-	-	
Fly 4T 4V	50	2012	2013	RP8C521	666761	**225162401**	-	-	
Fly 4T Motore Chn	50	2006	2007	C44500	563246	**225160160**	-	-	
Free Delivery	50	2000	2001	FCS2T	563246	**225160160**	-	-	
Free FI	50	1995	2002	FCS2T	563246	**225160160**	-	-	
Liberty	50	1997	2005	C1500	564573	**225160190**	-	-	
Liberty	50	1997	2005	C1500	56391R	**225162112**	-	-	Ant. Disegno alternativo I *Front alternative design*
Liberty 2T	50	2006	2006	C42100	56484R	**225160190**	-	-	
Liberty 2T	50	2006	2006	C42100	56484R	**225162112**	-	-	Ant. Disegno alternativo I *Front alternative design*
Liberty 2T	50	2007	2008	C42500	56484R	**225160190**	-	-	
Liberty 2T	50	2007	2008	C42500	56484R	**225162112**	-	-	Ant. Disegno alternativo I *Front alternative design*
Liberty 2T Rst	50	2004	2004	C42100	564573	**225160190**	-	-	
Liberty 2T Rst	50	2004	2004	C42100	56391R	**225162112**	-	-	Ant. Disegno alternativo I *Front alternative design*
Liberty 2T Sport	50	2006	2006	C42106	564573	**225160190**	-	-	
Liberty 2T Sport	50	2006	2006	C42106	56391R	**225162112**	-	-	Ant. Disegno alternativo I *Front alternative design*
Liberty 2T Sport	50	2007	2008	C42501	56484R	**225160190**	-	-	
Liberty 2T Sport	50	2007	2008	C42501	56484R	**225162112**	-	-	Ant. Disegno alternativo I *Front alternative design*
Liberty 4T	50	2000	2002	C2800	564573	**225160190**	-	-	
Liberty 4T	50	2000	2002	C2800	56391R	**225162112**	-	-	Ant. Disegno alternativo I *Front alternative design*
Liberty 4T	50	2005	2008	C42400	56484R	**225160190**	-	-	
Liberty 4T	50	2005	2008	C42400	56484R	**225162112**	-	-	Ant. Disegno alternativo I *Front alternative design*
Liberty 4T Delivery - Single	50	2010	2014	C42401	56484R	**225160190**	-	-	
Liberty 4T Delivery - Single	50	2010	2014	C42401	56484R	**225162112**	-	-	Ant. Disegno alternativo I *Front alternative design*
Liberty 4T Delivery Tnt	50	2009	2009	C42401	56391R	**225160190**	-	-	
Liberty 4T Delivery Tnt	50	2009	2009	C42401	56391R	**225162112**	-	-	Ant. Disegno alternativo I *Front alternative design*
Liberty 4T Ptt - Double - Nexive	50	2009	2017	C42402\C42404	56484R	**225160190**	-	-	
Liberty 4T Ptt - Double - Nexive	50	2009	2017	C42402\C42404	56484R	**225162112**	-	-	Ant. Disegno alternativo I *Front alternative design*
Liberty 4T Ptt (Deu)	50	2007	2012	C42406	56391R	**225160190**	-	-	
Liberty 4T Ptt (Deu)	50	2007	2012	C42406	56391R	**225162112**	-	-	Ant. Disegno alternativo I *Front alternative design*
Liberty 4T Rst	50	2004	2004	C42200	564573	**225160190**	-	-	
Liberty 4T Rst	50	2004	2004	C42200	56391R	**225162112**	-	-	Ant. Disegno alternativo I *Front alternative design*
Liberty 4T Sport	50	2006	2006	C42405	564573	**225160190**	-	-	
Liberty 4T Sport	50	2006	2006	C42405	56391R	**225162112**	-	-	Ant. Disegno alternativo I *Front alternative design*
Liberty 4T Sport	50	2007	2008	C42405	56484R	**225160190**	-	-	
Liberty 4T Sport	50	2007	2008	C42405	56484R	**225162112**	-	-	Ant. Disegno alternativo I *Front alternative design*
Liberty Moc 2T & Elle	50	2009	2013	C49100	56478R	**225162172**	-	-	
Liberty Moc 4T & Elle	50	2009	2016	C49200	56478R	**225162172**	-	-	
Liberty Ptt Eu2	50	2004	2005	C37401	564573	**225160190**	-	-	
Liberty Ptt Eu2	50	2004	2005	C37401	56391R	**225162112**	-	-	Ant. Disegno alternativo I *Front alternative design*
Nrg	50	1994	1996	SAL1T	272156	**225160200**	-	-	

Modello *Model*	CC	Da *From*	A *To*	Telaio *Frame*	OEM Anteriore *OEM Front*	RMS Anteriore *RMS Front*	OEM Posteriore *OEM Rear*	RMS Posteriore *RMS Rear*	Note *Notes*
Nrg Extreme	50	1999	2000		561714	**225160180**	564520	**225160140**	
Nrg Mc3	50	2001	2004	C320\210	561714	**225160180**	564520	**225160140**	
Nrg Power Dd	50	2005	2005	C45100	564573	**225160190**	56396R	**225160140**	
Nrg Power Dd	50	2005	2005	C45100	56391R	**225162112**	56396R	**225160140**	Ant. Disegno alternativo | *Front alternative design*
Nrg Power Dd	50	2006	2006	C45100	564573	**225160190**	564520	**225160140**	
Nrg Power Dd	50	2006	2006	C45100	56391R	**225162112**	564520	**225160140**	Ant. Disegno alternativo | *Front alternative design*
Nrg Power Dd	50	2007	2017	C45100	56484R	**225160190**	56396R	**225160140**	
Nrg Power Dd	50	2007	2017	C45100	56484R	**225162112**	56396R	**225160140**	Ant. Disegno alternativo | *Front alternative design*
Nrg Power Dd Serie Speciale	50	2007	2012	C45100	56391R	**225160190**	56396R	**225160140**	
Nrg Power Dd Serie Speciale	50	2007	2012	C45100	56391R	**225162112**	56396R	**225160140**	Ant. Disegno alternativo | *Front alternative design*
Nrg Power Dt	50	2006	2006	C45300	564573	**225160190**	-	-	
Nrg Power Dt	50	2006	2006	C45300	56391R	**225162112**	-	-	Ant. Disegno alternativo | *Front alternative design*
Nrg Power Dt	50	2007	2015	C45300	56484R	**225160190**	-	-	
Nrg Power Dt	50	2007	2015	C45300	56484R	**225162112**	-	-	Ant. Disegno alternativo | *Front alternative design*
Nrg Power Dt Serie Speciale	50	2007	2008	C45300	56391R	**225160190**	-	-	
Nrg Power Dt Serie Speciale	50	2007	2008	C45300	56391R	**225162112**	-	-	Ant. Disegno alternativo | *Front alternative design*
Nrg Power Purejet	50	2004	2005	C45200	564573	**225160190**	564520	**225160140**	
Nrg Power Purejet	50	2004	2005	C45200	56391R	**225162112**	564520	**225160140**	Ant. Disegno alternativo | *Front alternative design*
Nrg Power Purejet	50	2006	2006	C45200	564573	**225160190**	564520	**225160140**	
Nrg Power Purejet	50	2006	2006	C45200	56391R	**225162112**	564520	**225160140**	Ant. Disegno alternativo | *Front alternative design*
Nrg Power Purejet	50	2007	2009	C45200	564573	**225160190**	56396R	**225160140**	
Nrg Power Purejet	50	2007	2009	C45200	56391R	**225162112**	56396R	**225160140**	Ant. Disegno alternativo | *Front alternative design*
Nrg Power Purejet	50	2010	2011	C45200	56484R	**225160190**	56396R	**225160140**	
Nrg Power Purejet	50	2010	2011	C45200	56484R	**225162112**	56396R	**225160140**	Ant. Disegno alternativo | *Front alternative design*
Nrg Purejet	50	2002	2004	C320001	561714	**225160180**	564520	**225160140**	
Nrg Purejet	50	2010	2010	C45200	56391R	**225160190**	56396R	**225160140**	
Nrg Purejet	50	2010	2010	C45200	56391R	**225162112**	56396R	**225160140**	Ant. Disegno alternativo | *Front alternative design*
Nrg Rst Mc2	50	1996	1998	C04000	272156	**225160200**	564520	**225160140**	
Ntt	50	1995	1996	SAL1T	272156	**225160200**	-	-	
Sfera Rst	50	1995	1997	C0100	562003	**225160160**	-	-	
Typhoon	50	2001	2008	C29000	272156	**225160200**	-	-	
Typhoon	50	2009	2011	C48100	56408R	**225160200**	-	-	
Typhoon 2T Euro2	50	2010	2016	LBMC501	666761	**225162401**	-	-	
Typhoon 2T Euro3 Ch	50	2011	2011	LBMC5	666761	**225162401**	-	-	
Vespa Et2	50	1997	2005	C1600\38100	56395R	**225160160**	-	-	
Vespa Et2 Iniezione	50	1997	2000	C1200	563246	**225160160**	-	-	
Vespa Et4	50	2000	2005	C26100	563246	**225160160**	-	-	
Vespa Lx 2T	50	2005	2013	C38101	56395R	**225160160**	-	-	
Vespa Lx 2T Touring & 30Km	50	2010	2013	C38101	56395R	**225160160**	-	-	
Vespa Lx 4T	50	2005	2009	C38300	56395R	**225160160**	-	-	
Vespa Lx 4T-4V	50	2009	2013	C38700	-	-	-	-	
Vespa Lx 4T-4V Touring	50	2010	2013	C38700	-	-	-	-	
Vespa Lxv 2T	50	2006	2009	C38102	56395R	**225160160**	-	-	
Vespa Lxv 2T Navy	50	2008	2008	C38102	56395R	**225160160**	-	-	
Vespa Primavera 2T	50	2013	2017	C53200	56395R	**225160160**	-	-	
Vespa Primavera 4T 2V 25 Km/H	50	2014	2017	C53300	56395R	**225160160**	-	-	
Vespa Primavera 4T-4V	50	2013	2017	C53100	56395R	**225160160**	-	-	
Vespa S 2T & College	50	2007	2012	C38103	56395R	**225160160**	-	-	

Modello *Model*	CC	Da *From*	A *To*	Telaio *Frame*	OEM Anteriore *OEM Front*	RMS Anteriore *RMS Front*	OEM Posteriore *OEM Rear*	RMS Posteriore *RMS Rear*	Note *Notes*
Vespa S 4T-4V & College	50	2008	2012	M38600	56395R	**225160160**	-	-	
Vespa Sprint 2T 2V	50	2014	2017	C53201	56395R	**225160160**	-	-	
Vespa Sprint 4T 2V 25 Km/H	50	2014	2017	C53301	56395R	**225160160**	-	-	
Vespa Sprint 4T 4V	50	2014	2017	C53101	56395R	**225160160**	-	-	
Zip	50	1995	1996	SSP2T	271594	**225160020**	-	-	
Zip	50	2000	2004	C25000	564520	**225160140**	-	-	
Zip 2T	50	2008	2013	C25E0	56396R	**225160140**	-	-	
Zip 4T	50	2000	2005	C25000	564520	**225160140**	-	-	
Zip 4T	50	2006	2013	LBMC25C	56396R	**225160140**	-	-	
Zip 4T 25Km-H	50	2006	2016		56396R	**225160140**	-	-	
Zip Fast Raider	50	1993	1994	SSP1T	271594	**225160020**	-	-	
Zip Fast Raider Rst	50	1996	1997	C0700	271594	**225160020**	-	-	
Zip Sp	50	1996	2000	C1100	562003	**225160160**	-	-	
Zip Sp	50	2001	2004	C250004	563246	**225160160**	-	-	
Zip Sp Euro2	50	2006	2013	C25000	56395R	**225160160**	-	-	
Fly 4T	100	2006	2014	M53100	56395R	**225160160**	-	-	
Free	100	2002	2003	M2910	564573	**225160190**	-	-	
Free	100	2002	2003	M2910	56391R	**225162112**	-	-	Ant. Disegno alternativo | *Front alternative design*
Zip 4T	100	2006	2010	M25200	56396R	**225160140**	-	-	
Beverly	125	2001	2003	M2810\M2820	597243	**225162080**	597243	**225162080**	
Beverly Euro 3	125	2007	2008	M28900	56397R	**225162080**	56397R	**225162080**	
Beverly Euro 3 Mic	125	2007	2007	M28900	597243	**225162080**	597243	**225162080**	
Beverly Euro 3 Sport	125	2007	2008	M28900	56397R	**225162080**	56397R	**225162080**	
Beverly Rst	125	2004	2005	M28400	597243	**225162080**	597243	**225162080**	
Beverly Rst	125	2005	2007	M28400	56397R	**225162080**	56397R	**225162080**	
Beverly Rst 4T 4V Ie Euro3	125	2010	2015	ZAMP69100	58546R	**225162591**	-	-	
Beverly Tourer Euro3	125	2007	2010	M28901	56397R	**225162080**	56397R	**225162080**	
Carnaby	125	2007	2010	M60200	56397R	**225162080**	56397R	**225162080**	
Fly	125	2005	2007	M42100	563246	**225160160**	-	-	
Fly 4T 3V Ie E3 Dt	125	2013	2015		666761	**225162401**	-	-	
Fly 4T 3V Ie Euro3 Lem	125	2012	2013	RP8M791	666761	**225162401**	56484R	**225160190**	
Fly 4T 3V Ie Euro3 Lem	125	2012	2013	RP8M791	666761	**225162401**	56484R	**225162112**	Post. Disegno alternativo | *Rear alternative design*
Fly Euro3	125	2007	2007	M57100	56395R	**225160160**	-	-	
Fly Euro3	125	2008	2011	M57200	56395R	**225160160**	-	-	
Hexagon Gtx	125	2000	2000	M2000000\M2000001	563246	**225160160**	563246	**225160160**	
Hexagon Lx4	125	1998	1999	M1500	563246	**225160160**	-	-	
Hexagon Lx-Lxt	125	1998	1999	M0500\M0600	563246	**225160160**	-	-	
Liberty	125	1998	2000	M1100	564573	**225160190**	-	-	
Liberty	125	1998	2000	M1100	56391R	**225162112**	-	-	Ant. Disegno alternativo | *Front alternative design*
Liberty	125	2001	2002	M2200	564573	**225160190**	-	-	
Liberty	125	2001	2002	M2200	56391R	**225162112**	-	-	Ant. Disegno alternativo | *Front alternative design*
Liberty 4T	125	2006	2007	M38100	56484R	**225160190**	-	-	
Liberty 4T	125	2006	2007	M38100	56484R	**225162112**	-	-	Ant. Disegno alternativo | *Front alternative design*
Liberty 4T 2V Euro3	125	2009	2012	M67100	56478R	**225162172**	-	-	
Liberty 4T 2V Ie Ptt - Ita	125	2012	2013	M38900	56478R	**225162172**	-	-	
Liberty 4T 3V Ie E3	125	2013	2014	M73400	56478R	**225162172**	-	-	
Liberty 4T Euro3	125	2006	2008	M38600	56484R	**225160190**	-	-	
Liberty 4T Euro3	125	2006	2008	M38600	56484R	**225162112**	-	-	Ant. Disegno alternativo | *Front alternative design*
Liberty 4T Euro3 Delivery - Single	125	2007	2015	M38602	56484R	**225160190**	-	-	
Liberty 4T Euro3 Delivery - Single	125	2007	2015	M38602	56484R	**225162112**	-	-	Ant. Disegno alternativo | *Front alternative design*
Liberty 4T Euro3 Delivery - Tnt - Nexive	125	2008	2015	P38602	56484R	**225160190**	-	-	

Modello *Model*	**CC**	**Da** *From*	**A** *To*	**Telaio** *Frame*	**OEM Anteriore** *OEM Front*	**RMS Anteriore** *RMS Front*	**OEM Posteriore** *OEM Rear*	**RMS Posteriore** *RMS Rear*	**Note** *Notes*
Liberty 4T Euro3 Delivery - Tnt - Nexive	125	2008	2015	P38602	56484R	**225162112**	-	-	Ant. Disegno alternativo | *Front alternative design*
Liberty 4T Sport Euro3	125	2006	2008	M38601	56484R	**225160190**	-	-	
Liberty 4T Sport Euro3	125	2006	2008	M38601	56484R	**225162112**	-	-	Ant. Disegno alternativo | *Front alternative design*
Liberty Rst	125	2004	2005	M38100	564573	**225160190**	-	-	
Liberty Rst	125	2004	2005	M38100	56391R	**225162112**	-	-	Ant. Disegno alternativo | *Front alternative design*
Liberty Rst Ptt	125	2005	2011	M38103	56484R	**225160190**	-	-	
Liberty Rst Ptt	125	2005	2011	M38103	56484R	**225162112**	-	-	Ant. Disegno alternativo | *Front alternative design*
Liberty Sport	125	2006	2006	M38104	56484R	**225160190**	-	-	
Liberty Sport	125	2006	2006	M38104	56484R	**225162112**	-	-	Ant. Disegno alternativo | *Front alternative design*
Medley 4T Ie Abs	125	2016	2017	RP8MA0120	-	-	667032	**225162581**	
Mp3	125	2006	2008	M47300	649226	**225162122**	56498R	**225162060**	
Mp3 Ibrido	125	2009	2010	M65100	649226	**225162122**	56498R	**225162060**	
Mp3 Ie	125	2008	2009	M63100	649226	**225162122**	56498R	**225162060**	
Mp3 Ie Touring	125	2011	2012	M63100	649226	**225162122**	56498R	**225162060**	
Mp3 Yourban Erl	125	2011	2013	M71200	649226	**225162122**	56498R	**225162060**	
Sfera	125	1995	1997	M0100	563246	**225160160**	-	-	
Skipper 4T	125	2000	2002	M2100	561714	**225160180**	-	-	
Skipper Lx	125	1998	1999	M120\130	561714	**225160180**	-	-	
Super Hexagon Gtx 12	125	2001	2002	M2000002\M2000003	-	-	564573	**225160190**	
Typhoon 4T 2V Euro3	125	2010	2011	C5010	666761	**225162401**	-	-	
Vespa Et4	125	1996	1998	M0400	563246	**225160160**	-	-	
Vespa Et4	125	1999	2002	M1900	563246	**225160160**	-	-	
Vespa Granturismo	125	2003	2005	M311\312	564573	**225160190**	564573	**225160190**	
Vespa Granturismo	125	2003	2005	M311\312	56391R	**225162112**	56391R	**225162112**	Ant/Post Disegno alternativo | *Front/Rear alternative design*
Vespa Granturismo	125	2006	2007	M31101	564573	**225160190**	564573	**225160190**	
Vespa Granturismo	125	2006	2007	M31101	56391R	**225162112**	56391R	**225162112**	Ant/Post Disegno alternativo | *Front/Rear alternative design*
Vespa Granturismo Euro 3	125	2006	2007	M31300	56484R	**225160190**	56484R	**225160190**	
Vespa Granturismo Euro 3	125	2006	2007	M31300	56391R	**225162112**	56391R	**225162112**	Ant/Post Disegno alternativo | *Front/Rear alternative design*
Vespa Gts 4T Ie Super	125	2009	2016	M45300	56484R	**225160190**	56484R	**225160190**	
Vespa Gts 4T Ie Super	125	2009	2016	M45300	56391R	**225162112**	56484R	**225162112**	Ant/Post Disegno alternativo | *Front/Rear alternative design*
Vespa Gts Euro3	125	2007	2012	M31300	56484R	**225160190**	56484R	**225160190**	
Vespa Gts Euro3	125	2007	2012	M31300	56391R	**225162112**	56484R	**225162112**	Ant/Post Disegno alternativo | *Front/Rear alternative design*
Vespa Gts Ie Abs E4	125	2016	2017	MA3100\3200	56484R	**225160190**	-	-	
Vespa Gts Ie Abs E4	125	2016	2017	MA3100\3200	56391R	**225162112**	-	-	Ant/Post Disegno alternativo | *Front/Rear alternative design*
Vespa Gtv	125	2006	2008	M31301	56484R	**225160190**	56484R	**225160190**	
Vespa Gtv	125	2006	2008	M31301	56391R	**225162112**	56391R	**225162112**	Ant/Post Disegno alternativo | *Front/Rear alternative design*
Vespa Gtv 4T Navy Euro3	125	2008	2008	M31301	56391R	**225162112**	56484R	**225162112**	
Vespa Lx	125	2005	2006	M44100	56395R	**225160160**	-	-	
Vespa Lx 4T 3V Ie - Touring	125	2012	2013		56395R	**225160160**	-	-	
Vespa Lx 4T Euro3 Touring	125	2010	2011	M68100	56395R	**225160160**	-	-	
Vespa Lx 4T FI	125	2009	2009	M44100	56395R	**225160160**	-	-	
Vespa Lx Euro 3	125	2006	2008	M44300	56395R	**225160160**	-	-	
Vespa Lx Euro 3 Ie	125	2009	2011	M68100	56395R	**225160160**	-	-	
Vespa Lx Primavera 4T 3V Ie	125	2013	2017	M81100	56395R	**225160160**	-	-	
Vespa Lxv 4T Euro3	125	2006	2009	M44301	56395R	**225160160**	-	-	
Vespa Lxv 4T Navy Euro3	125	2007	2008	M44301	56395R	**225160160**	-	-	
Vespa Lxv Ie 4T	125	2010	2013	P68102	56395R	**225160160**	-	-	
Vespa Px	125	1998	2001	VNX2\VLX1\VSX1	56395R	**225160160**	-	-	
Vespa Px	125	2011	2017	M74100	56395R	**225160160**	-	-	

Modello *Model*	**CC**	**Da** *From*	**A** *To*	**Telaio** *Frame*	**OEM Anteriore** *OEM Front*	**RMS Anteriore** *RMS Front*	**OEM Posteriore** *OEM Rear*	**RMS Posteriore** *RMS Rear*	**Note** *Notes*
Vespa Px 125 E Freno A Disco	125	1998	2001	VNX2T	56395R	**225160160**	-	-	
Vespa Px 30 Anni	125	2007	2008	M09302	56395R	**225160160**	-	-	
Vespa Px Euro 2	125	2001	2007	M09302	563246	**225160160**	-	-	
Vespa S 4T 3V Ie	125	2012	2012	MM68301	56395R	**225160160**	-	-	
Vespa S 4T Euro 3	125	2007	2008	M44302	56395R	**225160160**	-	-	
Vespa S 4T Ie & College	125	2009	2011	M68101	56395R	**225160160**	-	-	
Vespa Sprint 4T 3V Ie	125	2014	2015	M81300\01	-	-	56395R	**225160160**	
X Evo	125	2007	2011		-	-	56498R	**225162060**	
X Evo	125	2007	2016	M36601\M36601	56393R	**225162070**	-	-	
X Evo	125	2007	2016		-	-	649163	**225162060**	
X10 4T 4V Ie Euro3	125	2012	2015	M76101	-	-	56498R	**225162060**	
X7 Euro 3	125	2008	2008	M62100	56393R	**225162070**	56498R	**225162060**	
X7 Evo Ie Euro 3	125	2009	2010	M62101	56393R	**225162070**	649163	**225162060**	
X8	125	2004	2004	PM36200\PM36300	599315	**225162070**	597520	**225162060**	
X8	125	2005	2006	M36301	56393R	**225162070**	649163	**225162060**	
X8 Premium Euro 2	125	2006	2006	M36301	56393R	**225162070**	649163	**225162060**	
X8 Premium Euro 3	125	2006	2007	M36600	56393R	**225162070**	649163	**225162060**	
X8 Street Euro 2	125	2006	2007	M49100	599315	**225162070**	-	-	
X9	125	2001	2002	M2300001	564371	**225160230**	564371	**225160230**	
X9 Evolution	125	2003	2003	M2300035	564371	**225160230**	564371	**225160230**	
X9 Evolution	125	2005	2006	M23000	56392R	**225160230**	56392R	**225160230**	
X9 Evolution Euro3	125	2007	2007	M48100	56392R	**225160230**	56392R	**225160230**	
Zip	125	2000	2002	M2500	564520	**225160140**	-	-	
Fly Euro3	150	2008	2011	M57100	56395R	**225160160**	-	-	
Liberty 4T 3V Lem	150	2013	2014	M73500	56478R	**225162172**	-	-	
Liberty 4T Euro3	150	2008	2008	M38700	56484R	**225160190**	56484R	**225160190**	
Liberty 4T Euro3	150	2008	2008	M38700	56391R	**225162112**	56484R	**225162112**	Ant/Post Disegno alternativo | *Front/Rear alternative design*
Liberty 4T Sport Euro3	150	2008	2008	M38701	56484R	**225160190**	-	-	
Liberty 4T Sport Euro3	150	2008	2008	M38701	56391R	**225162112**	-	-	Ant. Disegno alternativo | *Front alternative design*
Liberty Moc 4T Euro3	150	2009	2013	M67200	56478R	**225162172**	-	-	
Medley 4T Ie Abs	150	2016	2017	RP8MA0220	-	-	667032	**225162581**	
Vespa Gts 4T E4 Abs	150	2016	2017	MA3100\3200	56484R	**225160190**	-	-	
Vespa Gts 4T E4 Abs	150	2016	2017	MA3100\3200	56391R	**225162112**	-	-	Ant. Disegno alternativo | *Front alternative design*
Vespa Lx	150	2005	2006	M44200	56395R	**225160160**	-	-	
Vespa Lx 4T 3V Ie - Touring	150	2012	2013	M68400	-	-	56395R	**225160160**	
Vespa Lx 4T FI	150	2009	2009	M44400	56395R	**225160160**	-	-	
Vespa Lx Euro 3	150	2006	2008	M44400	56395R	**225160160**	-	-	
Vespa Lx Euro 3 Ie	150	2009	2011	M68200	56395R	**225160160**	-	-	
Vespa Lx Touring	150	2010	2012	M68200	56395R	**225160160**	-	-	
Vespa Primavera 4T-3V	150	2013	2016	M81200	56395R	**225160160**	-	-	
Vespa Px	150	2011	2017	M74200	56395R	**225160160**	-	-	
Vespa Px 150 E Freno A Disco	150	1998	2001	VLX1T	56395R	**225160160**	-	-	
Vespa S 4T	150	2008	2009	M44402	56395R	**225160160**	-	-	
Vespa S 4T Ie & College	150	2009	2012	M68201	56395R	**225160160**	-	-	
X8 Street Euro 2	150	2006	2008	M49200	56393R	**225162070**	-	-	
X9 Amalfi	180	2000	2003	M2300002	564371	**225160230**	564371	**225160230**	
Carnaby	200	2007	2008	M60100	56397R	**225162080**	56397R	**225162080**	
Liberty	200	2006	2006	M38400	564573	**225160190**	-	-	
Liberty	200	2006	2006	M38400	56391R	**225162112**	-	-	Ant. Disegno alternativo | *Front alternative design*
Liberty 4T Euro3	200	2006	2008	M38500	56484R	**225160190**	-	-	
Liberty 4T Euro3	200	2006	2008	M38500	56391R	**225162112**	-	-	Ant. Disegno alternativo | *Front alternative design*
Liberty 4T Sport Euro3	200	2006	2007	M38501	56484R	**225160190**	-	-	
Liberty 4T Sport Euro3	200	2006	2007	M38501	56391R	**225162112**	-	-	Ant. Disegno alternativo | *Front alternative design*

Modello *Model*	**CC**	**Da** *From*	**A** *To*	**Telaio** *Frame*	**OEM Anteriore** *OEM Front*	**RMS Anteriore** *RMS Front*	**OEM Posteriore** *OEM Rear*	**RMS Posteriore** *RMS Rear*	**Note** *Notes*
Liberty Rst	200	2004	2004	M3840001	564573	**225160190**	-	-	
Liberty Rst	200	2004	2004	M3840001	56391R	**225162112**	-	-	Ant. Disegno alternativo | *Front alternative design*
Liberty Sport	200	2006	2006	M38401	56391R	**225160190**	-	-	
Liberty Sport	200	2006	2006	M38401	56391R	**225162112**	-	-	Ant. Disegno alternativo | *Front alternative design*
Vespa Granturismo	200	2006	2007	M31200	564573	**225160190**	564573	**225160190**	
Vespa Granturismo	200	2006	2007	M31200	56391R	**225162112**	56391R	**225162112**	Ant/Post Disegno alternativo | *Front/Rear alternative design*
Vespa Px 200 E Freno A Disco	200	1998	2001	VSX1T	56395R	**225160160**	-	-	
X8	200	2005	2007	M36200	56393R	**225162070**	649163	**225162060**	
X9	200	2002	2003	M2300003	564371	**225160230**	564371	**225160230**	
X9 Evolution	200	2003	2003	M2300003	564371	**225160230**	564371	**225160230**	
Beverly	250	2006	2007	M28500	56397R	**225162080**	56397R	**225162080**	
Beverly Cruiser	250	2007	2009	M28802	56397R	**225162080**	56397R	**225162080**	
Beverly Euro 3 Mic	250	2007	2007	M28800	56397R	**225162080**	56397R	**225162080**	
Beverly Ie Euro 3	250	2006	2008	M28800	56397R	**225162080**	56397R	**225162080**	
Beverly Rst	250	2004	2005	M28500	597243	**225162080**	597243	**225162080**	
Beverly Sport	250	2006	2008	M28800	56397R	**225162080**	56397R	**225162080**	
Beverly Tourer Euro3	250	2007	2009	M28801	56397R	**225162080**	56397R	**225162080**	
Carnaby	250	2008	2008	M60300	56397R	**225162080**	56397R	**225162080**	
Hexagon Gt-Gtx	250	1998	2000	M1400	563246	**225160160**	563246	**225160160**	
Mp3	250	2006	2008	M47201	649226	**225162122**	56498R	**225162060**	
Mp3 Lt	250	2008	2009	M64100	649226	**225162122**	56498R	**225162060**	
Mp3 Mic	250	2008	2009	M63200	-	-	649163	**225162060**	
Vespa Gt 60 Euro 3	250	2006	2007	M45102	56484R	**225160190**	56484R	**225160190**	
Vespa Gt 60 Euro 3	250	2006	2007	M45102	56391R	**225162112**	56484R	**225162112**	Ant/Post Disegno alternativo | *Front/Rear alternative design*
Vespa Gts	250	2005	2016	M45100	56391R	**225162112**	56484R	**225162112**	
Vespa Gts Abs	250	2005	2012	45101	56391R	**225162112**	56391R	**225162112**	
Vespa Gtv	250	2006	2009	M45102	56391R	**225162112**	56484R	**225162112**	
Vespa Gtv 4T Navy Euro3	250	2007	2007	M45102	56391R	**225162112**	56484R	**225162112**	
X Evo	250	2007	2016	M36401\M36401	56393R	**225162070**	-	-	
X Evo	250	2007	2016		-	-	56498R	**225162060**	
X7 Euro 3	250	2008	2008	M62200	56393R	**225162070**	56498R	**225162060**	
X8 Euro3	250	2005	2008	M36400	56393R	**225162070**	649163	**225162060**	
X9	250	2000	2001	M23000	564371	**225160230**	564371	**225160230**	
X9 Evolution	250	2004	2004	M23000000	564371	**225160230**	564371	**225160230**	
X9 Evolution	250	2006	2006	M23000	56392R	**225160230**	56392R	**225160230**	
Beverly Ie Abs E4 (Emea)	300	2016	2017	A2100	58546R5	**225162591**	-	-	
Beverly Rst 4T 4V Ie Euro3	300	2010	2015	ZAMP69200	58546R	**225162591**	58547R	-	
Beverly Tourer Euro3	300	2009	2010	M28A00	56397R	**225162080**	56397R	**225162080**	
Carnaby Cruiser	300	2009	2012	M60400	56393R	**225162070**	56397R	**225162080**	
Mp3 300 Ie Lt	300	2010	2011	M64102	649226	**225162122**	56498R	**225162060**	
Mp3 300 Ie Mic	300	2010	2011	M63301	649226	**225162122**	56498R	**225162060**	
Mp3 300 Lt Business - Sport Abs - Enjoy	300	2014	2016	M86200	-	-	56498R	**225162060**	
Mp3 4T 4V Ie Erl Ibrido	300	2010	2013	M72100	649226	**225162122**	56498R	**225162060**	
Mp3 4T 4V Ie Lt Ibrido	300	2010	2011	M72100	649226	**225162122**	56498R	**225162060**	
Mp3 Ie E4 Lt Business - Sport Abs	300	2016	2017	TA1100\TA19L	-	-	56498R	**225162060**	
Mp3 Ie Lt- Ie Lt Sport	300	2011	2014	M64102	649226	**225162122**	56498R	**225162060**	
Mp3 Ie Lt Touring	300	2011	2013	M64102	649226	**225162122**	56498R	**225162060**	
Mp3 Ie Touring	300	2011	2012	M63301	649226	**225162122**	56498R	**225162060**	
Mp3 Yourban Erl	300	2011	2015	M71200	649226	**225162122**	56498R	**225162060**	
Mp3 Yourban Lt Erl	300	2011	2016	M75100	-	-	56498R	**225162060**	
Mp3 Yourban Lt Rl E4	300	2017	2017	TA0100	-	-	56498R	**225162060**	
Vespa Gts Ie & Touring	300	2012	2016	M45200	56484R	**225160190**	56484R	**225160190**	

Modello *Model*	CC	Da *From*	A *To*	Telaio *Frame*	OEM Anteriore *OEM Front*	RMS Anteriore *RMS Front*	OEM Posteriore *OEM Rear*	RMS Posteriore *RMS Rear*	Note *Notes*
Vespa Gts Ie & Touring	300	2012	2016	M45200	56391R	**225162112**	56484R	**225162112**	Ant/Post Disegno alternativo | *Front/Rear alternative design*
Vespa Gts Ie Abs E4	300	2016	2017	MA3300	56391R	**225162112**	56484R	**225162112**	
Vespa Gts Ie Touring	300	2011	2012	M45200	56391R	**225162112**	56484R	**225162112**	
Vespa Gts Super	300	2008	2016	M45200	56391R	**225162112**	56484R	**225162112**	
Vespa Gts Super Sport	300	2010	2013	M45200	56391R	**225162112**	56391R	**225162112**	
Vespa Gtv 4T 4V Ie	300	2010	2013	M4520	56391R	**225162112**	56391R	**225162112**	
Vespa Gtv Via Montenapoleone	300	2010	2010	M45201	56391R	**225162112**	56391R	**225162112**	
X7 Evo Ie Euro 3	300	2009	2010	M62201	56393R	**225162070**	56498R	**225162060**	
Beverly 4T 4V Ie Euro3 Sport Touring	350	2011	2014	M6930	58546R	**225162591**	667032	**225162581**	
Beverly 4T St Ie Abs	350	2016	2017	MA2200	58546R5	**225162591**	667032	**225162581**	
X10 4T 4V Ie Euro3	350	2012	2015	M76201\M76200	-	-	56498R	**225162060**	
Beverly Euro 3	400	2006	2007	M34300	599315	**225162070**	597520	**225162060**	
Beverly Tourer Euro3	400	2008	2010	M34400	56393R	**225162070**	56498R	**225162060**	
Mp3	400	2007	2008	M59100\01	649226	**225162122**	56498R	**225162060**	
Mp3 Ie Lt - Mp3 Ie Lt Sport	400	2008	2010	M64200	649226	**225162122**	56498R	**225162060**	
Mp3 Ie Lt Touring	400	2011	2011	M64200	649226	**225162122**	56498R	**225162060**	
Mp3 Mic	400	2008	2010	M59102	649226	**225162122**	56498R	**225162060**	
Mp3 Rl Touring	400	2011	2011	M59101	649226	**225162122**	56498R	**225162060**	
X Evo	400	2007	2011		56392R	**225160230**	56498R	**225162060**	
X Evo	400	2007	2016		-	-	649163	**225162060**	
X8 Euro3	400	2006	2008	M52100	56392R	**225160230**	56498R	**225162060**	
Beverly	500	2002	2006	M34100	597243	**225162080**	597520	**225162060**	
Beverly Cruiser	500	2007	2012	M34500	56393R	**225162070**	56498R	**225162060**	Dal 16/03/2007 - *From 16/03/2007*
Beverly Cruiser	500	2007	2012	M34500	597243	**225162080**	56498R	**225162060**	Fino al 16/03/2007 - *Till 16/03/2007*
Beverly Euro 3	500	2006	2008	M34200	56397R	**225162080**	597520	**225162060**	
Mp3 Lt Sport - Business	500	2011	2013	M64300	649226	**225162122**	56498R	**225162060**	
Mp3 Rl Sport - Business	500	2011	2012	M59200	649226	**225162122**	56498R	**225162060**	
X9	500	2001	2002	M2700	597243	**225162080**	597520	**225162060**	
X9 Evolution	500	2003	2005	M2700004	599315	**225162070**	597520	**225162060**	
X9 Evolution	500	2006	2007	M27000	56393R	**225162070**	649163	**225162060**	
X9 Evolution Abs	500	2006	2007	M27000	599315	**225162070**	597520	**225162060**	
SUZUKI									
An250 Burgman K3-K6	250	2003	2006	BV111\BV121\CJ43A	59221-14G00-000	**225160370**	-	-	
An250 Burgman K3-K6	250	2003	2006	BV111\BV121\CJ43A	59221-14G00-000	**225160371**	-	-	
An400 Burgman K3-K6	400	2003	2006	BW111\BW112	59221-14G00-000	**225160370**	-	-	
An400 Burgman K3-K6	400	2003	2006	BW111\BW112	59221-14G00-000	**225160371**	-	-	
SYM									
Euro Mx	125	2002	2002		45121H3A000	**225162492**	-	-	
Euro Mx E2	125	2003	2004	HF12W2-6	45121H3A000	**225162492**	-	-	
Gts 125	125	2006	2007	LM12W3-6	45121HMB000SH	**225162532**	43121H9A000	**225162501**	
Gts 125	125	2006	2007	LM12W3-6	45121HMB000SH	**225162532**	43121H9A000	**225162502**	
Gts Joymax	125	2006	2007	LM12W-6	45121HMA000	**225162532**	43121H9A000	**225162501**	
Gts Joymax	125	2006	2007	LM12W-6	45121HMA000	**225162532**	43121H9A000	**225162502**	
Hd Eu2	125	2003	2004	LH12W-6	45121HHA000	**225162511**	-	-	
Hd Eu2	125	2003	2004	LH12W-6	45121HHA000	**225162512**	-	-	
Hd Euro3	125	2007	2008	LH12W8-6	45121HHA000	**225162511**	-	-	
Hd Euro3	125	2007	2008	LH12W8-6	45121HHA000	**225162512**	-	-	
Hd Evo	125	2005	2006	LH12W5-6	45121HHA000	**225162511**	43121HMA000	**225162520**	
Hd Evo	125	2005	2006	LH12W5-6	45121HHA000	**225162512**	43121HMA000	**225162520**	
Hd Evo Euro3	125	2007	2008	LH12WB-6	45121HHA000	**225162511**	43121HMA000	**225162520**	
Hd Evo Euro3	125	2007	2008	LH12WB-6	45121HHA000	**225162512**	43121HMA000	**225162520**	
Hd Evo Euro3	125	2010	2011	LH12WB-6	45121HHA000	**225162511**	43121HMA000	**225162520**	
Hd Evo Euro3	125	2010	2011	LH12WB-6	45121HHA000	**225162512**	43121HMA000	**225162520**	
Hd Evo Tamburo Euro3	125	2008	2009	LH12WA-6	45121HHA000	**225162511**	-	-	
Hd Evo Tamburo Euro3	125	2008	2009	LH12WA-6	45121HHA000	**225162512**	-	-	

Modello *Model*	CC	Da *From*	A *To*	Telaio *Frame*	OEM Anteriore *OEM Front*	RMS Anteriore *RMS Front*	OEM Posteriore *OEM Rear*	RMS Posteriore *RMS Rear*	Note *Notes*
Hd2	125	2011	2011	LC12W1-6	-	-	43121HMA000	**225162520**	
Hd2	125	2014	2014	LC12W1-6	-	-	43121HMA000	**225162520**	
Joyride	125	2001	2002	LA12W1-6	45121H3A000	**225162492**	-	-	
Joyride Eu2	125	2003	2004	LA12W4-6	45121H3A000	**225162492**	43121H9A000	**225162501**	
Joyride Eu2	125	2003	2004	LA12W4-6	45121H3A000	**225162492**	43121H9A000	**225162502**	
Joyride Euro2	125	2005	2006	LA12W7-6	45121H3A000	**225162492**	43121H9A000	**225162501**	
Joyride Euro2	125	2005	2006	LA12W7-6	45121H3A000	**225162492**	43121H9A000	**225162502**	
Joyride Euro3	125	2007	2007	LD12W-6	45121H3A000	**225162492**	43121H9A000	**225162501**	
Joyride Euro3	125	2007	2007	LD12W-6	45121H3A000	**225162492**	43121H9A000	**225162502**	
Joyride Evo	125	2009	2010	LF12W-6	45121H3A000	**225162492**	43121H9A000	**225162501**	
Joyride Evo	125	2009	2010	LF12W-6	45121H3A000	**225162492**	43121H9A000	**225162502**	
Joyride Evo	125	2010	2010	LF12W1-T	45121H3A000	**225162492**	43121H9A000	**225162501**	
Joyride Evo	125	2010	2010	LF12W1-T	45121H3A000	**225162492**	43121H9A000	**225162502**	
Joyride Evo	125	2013	2014	LF12W1-T	45121H3A000	**225162492**	43121H9A000	**225162501**	
Joyride Evo	125	2013	2014	LF12W1-T	45121H3A000	**225162492**	43121H9A000	**225162502**	
Shark	125	1999	2002	HS12W-6	45121H3A000	**225162492**	-	-	
Vs	125	2006	2006	HA12A6-4	45121H3A000	**225162492**	-	-	
Vs Euro3	125	2007	2008	HA12C6-4	45121H3A000	**225162492**	-	-	
Euro Mx	150	2002	2002		45121H3A000	**225162492**	-	-	
Euro Mx Eu2	150	2003	2004	HF15W1-6	45121H3A000	**225162492**	-	-	
Joyride	150	2001	2002	LA15W1-6	45121H3A000	**225162492**	43121H9A000	**225162501**	
Joyride	150	2001	2002	LA15W1-6	45121H3A000	**225162492**	43121H9A000	**225162502**	
Shark	150	2000	2001	HS15W-6	45121H3A000	**225162492**	-	-	
Vs	150	2006	2006	HA15A6-4	45121H3A000	**225162492**	-	-	
Vs Euro3	150	2007	2008	HA15C6-4	45121H3A000	**225162492**	-	-	
Hd Eu2	200	2003	2004	LH18W-6	45121HHA000	**225162511**	-	-	
Hd Eu2	200	2003	2004	LH18W-6	45121HHA000	**225162512**	-	-	
Hd Euro3 I	200	2007	2007	LH18W8-6	45121HHA000	**225162511**	-	-	
Hd Euro3 I	200	2007	2007	LH18W8-6	45121HHA000	**225162512**	-	-	
Hd Evo Euro2	200	2005	2006	LH18W5-6	45121HHA000	**225162511**	43121HMA000	**225162520**	
Hd Evo Euro2	200	2005	2006	LH18W5-6	45121HHA000	**225162512**	43121HMA000	**225162520**	
Hd Evo Euro3 I	200	2007	2007	LH18W7-6	45121HHA000	**225162511**	43121HMA000	**225162520**	
Hd Evo Euro3 I	200	2007	2007	LH18W7-6	45121HHA000	**225162512**	43121HMA000	**225162520**	
Hd Evo I Euro3	200	2010	2012	LH18W7-6	45121HHA000	**225162511**	43121HMA000	**225162520**	
Hd Evo I Euro3	200	2010	2012	LH18W7-6	45121HHA000	**225162512**	43121HMA000	**225162520**	
Hd Evo I Tamburo Euro3	200	2008	2009	LH182WA-6	45121HHA000	**225162511**	-	-	
Hd Evo I Tamburo Euro3	200	2008	2009	LH182WA-6	45121HHA000	**225162512**	-	-	
Hd2 I	200	2011	2011	LC18W1-6	-	-	43121HMA000KB	**225162520**	
Hd2 I	200	2011	2011	LC18W1-6	-	-	43121HMA000KB	**225162521**	
Hd2 I	200	2014	2014	LC18W1-6	-	-	43121HMA000KB	**225162520**	
Hd2 I	200	2014	2014	LC18W1-6	-	-	43121HMA000KB	**225162521**	
Joyride	200	2003	2003	LA18W1-6	45121H3A000	**225162492**	43121H9A000	**225162501**	
Joyride	200	2003	2003	LA18W1-6	45121H3A000	**225162492**	43121H9A000	**225162502**	
Joyride Eu2	200	2003	2004	LA18W4-6	45121H3A000	**225162492**	43121H9A000	**225162501**	
Joyride Eu2	200	2003	2004	LA18W4-6	45121H3A000	**225162492**	43121H9A000	**225162502**	
Joyride Euro2	200	2005	2006	LA18W9-6	45121H3A000	**225162492**	43121H9A000	**225162501**	
Joyride Euro2	200	2005	2006	LA18W9-6	45121H3A000	**225162492**	43121H9A000	**225162502**	
Joyride Evo I	200	2009	2009	LF18W-6	45121H3A000	**225162492**	43121H9A000	**225162501**	
Joyride Evo I	200	2009	2009	LF18W-6	45121H3A000	**225162492**	43121H9A000	**225162502**	
Joyride Evo I	200	2013	2014	LF18W1-T	45121H3A000	**225162492**	43121H9A000	**225162501**	
Joyride Evo I	200	2013	2014	LF18W1-T	45121H3A000	**225162492**	43121H9A000	**225162502**	
Joyride I Euro3	200	2007	2009	LD18W-6	45121H3A000	**225162492**	43121H9A000	**225162501**	
Joyride I Euro3	200	2007	2009	LD18W-6	45121H3A000	**225162492**	43121H9A000	**225162502**	
Joyride I Evo	200	2010	2010	LF18W1-T	45121H3A000	**225162492**	43121H9A000	**225162501**	
Joyride I Evo	200	2010	2010	LF18W1-T	45121H3A000	**225162492**	43121H9A000	**225162502**	
Gts	250	2007	2008	LM25W-P	45121HMA000	**225162532**	43121HMA000	**225162520**	
Gts 250	250	2006	2007	LM25W-6	45121HMB000SH	**225162532**	43121HMA000	**225162520**	
Joymax	250	2005	2007	LM25W-6\LM25W-T	45121HMB000SH	**225162532**	43121HMA000	**225162520**	

Modello *Model*	CC	Da *From*	A *To*	Telaio *Frame*	OEM Anteriore *OEM Front*	RMS Anteriore *RMS Front*	OEM Posteriore *OEM Rear*	RMS Posteriore *RMS Rear*	Note *Notes*
Joymax Euro3 I	250	2007	2008	LM25W1-T	45121HMB000SH	**225162532**	43121HMA000	**225162520**	
Joymax Evo	300	2009	2009	LM30W-6	-	-	43121HMA000	**225162520**	
Joymax Evo	300	2009	2009	LM30W-6	-	-	43121HMA000	**225162521**	
Joymax Evo I	300	2010	2010	LM30W-T	45121HMB000SH	**225162532**	43121HMA000	**225162520**	
YAMAHA									
Bw'S	50	2004	2005	SA231	4VUF582T0000	**225160130**	-	-	
Bw'S	50	2006	2016	SA231	4VUF582T2000	**225160130**	-	-	
Bw'S Naked	50	2003	2003	SA064	4VUF582T0000	**225160130**	-	-	
Bw'S Naked	50	2004	2004	SA231	4VUF582T0000	**225160130**	-	-	
Bw'S Naked	50	2009	2016	SA231	4VUF582T2000	**225160130**	-	-	
Bw'S Next Generation	50	1999	2003	SA051	5JHF58310000	**225160210**	-	-	
Bw'S Next Generation	50	2004	2006	SA056	5JHF58310000	**225160210**	-	-	
Bw'S Original	50	1999	1999	SA061	4VUF582T0000	**225160130**	-	-	
Bw'S Original	50	1999	2002	SA061	4VUF582T0000	**225160130**	-	-	
Bw'S Original Euro2	50	2003	2003	SA064	4VUF582T0000	**225160130**	-	-	
Bw'S R	50	2001	2001	SA061	4VUF582T0000	**225160130**	-	-	
Cr Z	50	1991	1995	3WN4	2NA258310000	**225160020**	-	-	
Cs Jog R	50	2006	2012	SA22V	5C2F58310000	**225162280**	-	-	
Cs Jog R	50	2013	2015	SA486	5C2F58310000	**225162280**	-	-	
Cw Bw'S Original Euro2	50	2002	2002	SA064	4VUF582T0000	**225160130**	-	-	
Cw L Bw'S	50	2003	2003	SA064	4VUF582T0000	**225160130**	-	-	
Cw L Bw'S	50	2004	2004	SA231	4VUF582T2000	**225160130**	-	-	
Cw Sp Bw'S Original Euro2	50	2002	2002	SA064	4VUF582T0000	**225160130**	-	-	
Ew Slider	50	2000	2002	SA091	5JHF58310000	**225160210**	-	-	
Ya R Axis	50	1995	1996	4PC3\4PC6	4LV2582T0000	**225160020**	-	-	
Ya Za Jog Z	50	1995	1995	3XG\4SC	3XGF582T0000	**225160020**	-	-	
Yh Why	50	1998	1998	SA031	5EUF58310000	**225162370**	-	-	
Yh Why	50	2001	2002	SA03B	5EUF58310000	**225162370**	-	-	
Yh Why	50	2006	2006	SA03E	5EUF58310000	**225162370**	-	-	
Yh Why Euro1	50	1999	2000	SA031	5EUF58310000	**225162370**	-	-	
Yh Why Euro2	50	2003	2005	SA03E	5EUF58310000	**225162370**	-	-	
Ym Breeze	50	1994	1995	4KH1\4KH3	4LV2582T0000	**225160020**	-	-	
Yn F Neo'S 4	50	2009	2010	SA401	5C2F58310000	**225162280**	-	-	
Yn F Neo'S 4	50	2011	2012	SA404	5C2F58310000	**225162280**	-	-	
Yn F Neo'S 4	50	2012	2015	SA461	5C2F58310000	**225162280**	-	-	
Yn Neo'S	50	2004	2006	SA211	5ADF58310000	**225160200**	-	-	
Yn Neo'S	50	2007	2012	SA341	5C2F58310000	**225162280**	-	-	
Yn Neo'S	50	2012	2016	SA451	5C2F58310000	**225162280**	-	-	
Yn Neo'S Euro2	50	2002	2003	SA211	5ADF58310000	**225160200**	-	-	
Yn R Neo'S	50	1997	2001	5AD\SA151	5ADF58310000	**225160200**	-	-	
Yn R Neo'S	50	2002	2002	SA151	5ADF58310000	**225160200**	-	-	
Yq Aerox	50	1997	1998	5BR\5BR00	5JHF58310000	**225160210**	5JHF58310000	**225160210**	
Yq Aerox	50	2001	2002	SA141	5JHF58310000	**225160210**	5JHF58310000	**225160210**	
Yq Aerox	50	2004	2008	SA144	5JHF58310000	**225160210**	5JHF58310000	**225160210**	
Yq Aerox R	50	1999	1999	5BR00	5JHF58310000	**225160210**	5JHF58310000	**225160210**	
Yq Aerox R	50	1999	2000	5BR00	5JHF58310000	**225160210**	5JHF58310000	**225160210**	
Yq L Aerox Euro2	50	2003	2003	SA144	5JHF58310000	**225160210**	5JHF58310000	**225160210**	
Yn Neo'S	100	1999	2002	SB041	5ADF58310000	**225160200**	-	-	
Yq Aerox	100	2000	2002	SB051	5JHF58310000	**225160210**	-	-	
Gpd125A N-Max	125	2015	2015	SE931	2DPF582U0000	**225162620**	2DPF582W0000	**225162630**	
Gpd125-A N-Max	125	2017	2017	SEC71	2DPF582U0000	**225162620**	2DPF582W0000	**225162630**	
Gpd125-A N-Max	125	2018	2018		2DPF582U0000	**225162620**	2DPF582W0000	**225162630**	
Hw Xenter	125	2012	2017	SE591	52SF582T0000	**225162650**	-	-	
Vp X-City	125	2008	2011	SE431	5B2F582T0000	**225162390**	-	-	
Yp125R X-Max	125	2006	2009	SE321	1B9F582U0000	**225162040**	1B9F582W0100	**225162050**	
Yp125R X-Max	125	2010	2012	SE541	1B9F582U0000	**225162040**	1B9F582W0100	**225162050**	
Yp125R X-Max	125	2012	2013	SG252	1B9F582U0000	**225162040**	1B9F582W0100	**225162050**	
Yp125R X-Max	125	2014	2014	SE681	1B9F582U0000	**225162040**	-	-	

Modello *Model*	CC	Da *From*	A *To*	Telaio *Frame*	OEM Anteriore *OEM Front*	RMS Anteriore *RMS Front*	OEM Posteriore *OEM Rear*	RMS Posteriore *RMS Rear*	Note *Notes*
Yp125R X-Max	125	2015	2016	SE681\SE686	1B9F582U0000	**225162040**	-	-	
Yp125R X-Max Abs	125	2011	2011	SE544	1B9F582U0000	**225162040**	1B72582W0000	**225162380**	
Yp125Ra X-Max Abs	125	2013	2013	SE644	1B9F582U0000	**225162040**	1B72582W0000	**225162380**	
Yp125Ra X-Max Abs	125	2014	2016	SE684	1B9F582U0000	**225162040**	1B72582W0000	**225162380**	
Yp125Ra X-Max Abs	125	2017	2017	SEC31	1B9F582U0000	**225162040**	1B72582W0000	**225162380**	
Gpd150-A N-Max	150	2017	2017	SG431	2DPF582U0000	**225162620**	2DPF582W0000	**225162630**	
Hw Xenter	150	2012	2016	SG231	52SF582T0000	**225162650**	-	-	
Vp X-City	250	2007	2008	SG191	5B2F582T0000	**225162390**	-	-	
Vp X-City	250	2009	2012	SG192\SG194	5B2F582T0000	**225162390**	-	-	
Vp X-City	250	2013	2015	SG194	5B2F582T0000	**225162390**	-	-	
Yp250 Majesty	250	1996	1998	4UC	4HC2582T0000	**225162330**	-	-	
Yp250 Majesty	250	2000	2001	SG041	4HC2582T0000	**225162330**	5GM2582W0000	**225160300**	
Yp250 Majesty	250	2002	2003	SG048	4HC2582T0000	**225162330**	5GM2582W0000	**225160300**	
Yp250 Majesty Abs	250	2003	2003	SG04B	4HC2582T0000	**225162330**	5GM2582W0000	**225160300**	
Yp250 Majesty Dx	250	1998	1999	SG021\SG022	4HC2582T0000	**225162330**	5CG2582W0000	**225160390**	
Yp250R Black X-Max	250	2009	2009	SG162	1B9F582U0000	**225162040**	1B9F582W0100	**225162050**	
Yp250R X-Max	250	2005	2006	SG161	1B9F582U0000	**225162040**	1B9F582W0100	**225162050**	
Yp250R X-Max	250	2007	2009	SG162	1B9F582U0000	**225162040**	1B9F582W0100	**225162050**	
Yp250R X-Max	250	2010	2012	SG221	1B9F582U0000	**225162040**	1B9F582W0100	**225162050**	
Yp250R X-Max	250	2012	2013	SG251	1B9F582U0000	**225162040**	1B9F582W0100	**225162050**	
Yp250R X-Max	250	2014	2016	SG261	1B9F582U0000	**225162040**	-	-	
Yp250R X-Max Sport	250	2011	2012	SG224	1B9F582U0000	**225162040**	1B9F582W0100	**225162050**	
Yp250Ra X-Max Abs	250	2011	2012	SG222	1B9F582U0000	**225162040**	1B72582W0000	**225162380**	
Yp250Ra X-Max Abs	250	2012	2013	SG252	1B9F582U0000	**225162040**	1B72582W0000	**225162380**	
Yp250Ra X-Max Abs	250	2014	2015	SG262	1B9F582U0000	**225162040**	1B72582W0000	**225162380**	
Yp250Ra X-Max Abs	250	2016	2016	SG262\SG266	1B9F582U0000	**225162040**	1B72582W0000	**225162380**	
Yp400R X-Max	400	2013	2016	SH071	1SDF581T0000	**225162340**	1SDF582W0000	**225162430**	
Yp400R X-Max Momodesign	400	2014	2014	SH071	1SDF581T0000	**225162340**	1SDF582W0000	**225162430**	
Yp400Ra X-Max	400	2018	2018	SH121	1SDF581T0000	**225162340**	1SDF582W0000	**225162430**	
Yp400Ra X-Max Abs	400	2014	2017	SH072	1SDF581T0000	**225162340**	1SDF582W0000	**225162430**	
Yp400Ra X-Max Ironmax Abs	400	2016	2016	SH072	1SDF581T0000	**225162340**	1SDF582W0000	**225162430**	
Yp400Ra X-Max Momodesign Abs	400	2014	2014	SH076	1SDF581T0000	**225162340**	1SDF582W0000	**225162430**	
Xp T-Max	500	2001	2003	SJ011\4\5\6	5GJ2582T0000	**225160310**	3GM2582WA000	**225160320**	
Xp T-Max	500	2004	2006	SJ031\SJ032	5VU2581T0100	**225162340**	5VU2582W0000	**225160320**	
Xp T-Max	500	2007	2007	SJ051\SJ032	5VU2581T0100	**225162340**	5VU2582W0000	**225160320**	
Xp T-Max	500	2008	2011	SJ061\SJ062	4B52581T0000	**225162350**	4B52582V0000	**225162270**	
Xp T-Max Abs	500	2005	2005	SJ034	5VU2581T0000	**225162340**	5VU2582W0000	**225160320**	
Xp T-Max Abs	500	2006	2006	SJ034	5VU2581T0100	**225162340**	5VU2582W0000	**225160320**	
Xp T-Max Abs	500	2007	2007	SJ052	5VU2581T0100	**225162340**	5VU2582W0000	**225160320**	
Xp T-Max Abs	500	2008	2011	SJ064	4B52581T0000	**225162350**	4B52582V0000	**225162270**	
Xp T-Max Abs Sv	500	2010	2011	SJ064	4B52581T0000	**225162350**	4B52582V0000	**225162270**	
Xp T-Max Black Max	500	2006	2006	SJ031	5VU2581T0100	**225162340**	5VU2582W0000	**225160320**	
Xp T-Max Black Max-Night Max	500	2007	2007	SJ051	5VU2581T0100	**225162340**	5VU2582W0000	**225160320**	
Xp T-Max Sv	500	2011	2011	SJ061	4B52581T0000	**225162350**	4B52582V0000	**225162270**	
Xp T-Max White Max	500	2010	2010	SJ061\SJ062	4B52581T0000	**225162350**	4B52582V0000	**225162270**	
Xp T-Max	530	2012	2014	SJ091	59C2581T0000	**225162340**	59C2582W0000	**225162561**	
Xp T-Max	530	2015	2016	SJ098	59C2581T0000	**225162340**	59C2582W0000	**225162561**	
Xp T-Max Abs	530	2012	2014	SJ092	59C2581T0000	**225162340**	59C2582W0000	**225162561**	
Xp T-Max Abs	530	2015	2016	SJ099	59C2581T0000	**225162340**	59C2582W0000	**225162561**	
Xp T-Max Sp	530	2015	2015	SJ098	59C2581T0000	**225162340**	59C2582W0000	**225162561**	
Xp T-Max Sp Abs	530	2015	2016	SJ099	59C2581T0000	**225162340**	59C2582W0000	**225162561**	
Xp530-A T-Max Sx	530	2017	2017	SJ142	59C2581T0000	**225162340**	59C2582W0000	**225162561**	
Xp530D-A T-Max Dx	530	2017	2017	SJ145	59C2581T0000	**225162340**	59C2582W0000	**225162561**	
Xp530E-A T-Max	530	2017	2017	SJ141	59C2581T0000	**225162340**	59C2582W0000	**225162561**	
Xj S Diversion	900	1995	1995	4KM	-	-	3GM2582WA000	**225160320**	
Xj S Diversion	900	1996	1996	4KM3	-	-	3GM2582WA000	**225160320**	
Xj S Diversion	900	1997	2001	4KM	-	-	3GM2582WA000	**225160320**	

Modello *Model*	**CC**	**Da** *From*	**A** *To*	**Telaio** *Frame*	**OEM Anteriore** *OEM Front*	**RMS Anteriore** *RMS Front*	**OEM Posteriore** *OEM Rear*	**RMS Posteriore** *RMS Rear*	**Note** *Notes*
Fzs Fazer	1000	2001	2003	RN061\RN066	-	-	3GM2582WA000	**225160320**	
Fzs Fazer	1000	2004	2005	RN066\RN141	-	-	3GM2582WA000	**225160320**	
Bt Bulldog	1100	2002	2004	RP051	-	-	3GM2582WA000	**225160320**	
Bt Bulldog	1100	2005	2006	RP052	-	-	3GM2582WA000	**225160320**	
Xjr	1200	1995	1997	4PU\4RB	-	-	3GM2582WA000	**225160320**	
Xjr1300	1300	2002	2003	RP061\RP064	-	-	3GM2582WA000	**225160320**	
Xjr1300	1300	2004	2006	RP101\RP104	-	-	3GM2582WA000	**225160320**	
Xjr1300	1300	2007	2011	RM191\RP192	-	-	3GM2582WA000	**225160320**	
Xjr1300	1300	2013	2013	RP191	-	-	3GM2582WA000	**225160320**	
Xjr1300 - Xjr1300Sp	1300	1999	2001	RP021\RP022\RP024	-	-	3GM2582WA000	**225160320**	
Xjr1300C	1300	2015	2016	RP194	-	-	3GM2582WA000	**225160320**	

225160010

BENELLI: R.O. R43810011A0
MALAGUTI: R.O. 11943000



Ø Esterno mm *Ø External mm*	Ø Interno mm *Ø Internal mm*	Spessore mm *Thickness mm*	Ø Fori Fiss. mm *Ø Fixing holes mm*
190	58	4	9

225160020

APRILIA: R.O. AP8213383
GILERA: R.O. 271594
MBK: R.O. 2NA258310000 - 5SUF582T0000
PIAGGIO: R.O. 271594
YAMAHA: R.O. 2NA258310000 - 4LV2582T0000 - 3XGF582T0000



Ø Esterno mm *Ø External mm*	Ø Interno mm *Ø Internal mm*	Spessore mm *Thickness mm*	Ø Fori Fiss. mm *Ø Fixing holes mm*
155	40,7	3,6	10,7

225160040

APRILIA: R.O. AP8213381



Ø Esterno mm *Ø External mm*	Ø Interno mm *Ø Internal mm*	Spessore mm *Thickness mm*	Ø Fori Fiss. mm *Ø Fixing holes mm*
220	60	4	6,5

225160050

APRILIA: R.O. AP8113541



Ø Esterno mm *Ø External mm*	Ø Interno mm *Ø Internal mm*	Spessore mm *Thickness mm*	Ø Fori Fiss. mm *Ø Fixing holes mm*
220	60	4	8

225160070

HONDA: R.O. 45351GBY910ZA



Ø Esterno mm *Ø External mm*	Ø Interno mm *Ø Internal mm*	Spessore mm *Thickness mm*	Ø Fori Fiss. mm *Ø Fixing holes mm*
220	88	4,1	10,3

225160120

MALAGUTI: R.O. 11939800



Ø Esterno mm *Ø External mm*	Ø Interno mm *Ø Internal mm*	Spessore mm *Thickness mm*	Ø Fori Fiss. mm *Ø Fixing holes mm*
200	96	4	6,5

225160130

MBK: R.O. 4VUF582T0000
YAMAHA: R.O. 4VUF582T0000 - 4VUF582T2000



Ø Esterno mm *Ø External mm*	Ø Interno mm *Ø Internal mm*	Spessore mm *Thickness mm*	Ø Fori Fiss. mm *Ø Fixing holes mm*
180	48	3,5	10

225160140

DERBI: R.O. 564520
GILERA: R.O. 564520 - 56396
PIAGGIO: R.O. 564520 - 56396R



Ø Esterno mm *Ø External mm*	Ø Interno mm *Ø Internal mm*	Spessore mm *Thickness mm*	Ø Fori Fiss. mm *Ø Fixing holes mm*
175	73	4	6,5

225160160

GILERA: R.O. 563246
PIAGGIO: R.O. 56395R - 563246 - 562003



Ø Esterno mm *Ø External mm*	Ø Interno mm *Ø Internal mm*	Spessore mm *Thickness mm*	Ø Fori Fiss. mm *Ø Fixing holes mm*
155	39	4,1	6,5

225160180

APRILIA: R.O. 853058
BETA: R.O. -
GILERA: R.O. 561714
PIAGGIO: R.O. 561714



Ø Esterno mm *Ø External mm*	Ø Interno mm *Ø Internal mm*	Spessore mm *Thickness mm*	Ø Fori Fiss. mm *Ø Fixing holes mm*
220	58	4	6,5

225160190

GILERA: R.O. 56484R - 56391R - 564573
PIAGGIO: R.O. 564573 - 56484R - 56391R



Ø Esterno mm *Ø External mm*	Ø Interno mm *Ø Internal mm*	Spessore mm *Thickness mm*	Ø Fori Fiss. mm *Ø Fixing holes mm*
220	105	4	6,5

225160200

APRILIA: R.O. AP8213231
GILERA: R.O. 272156 - 56408R
MBK: R.O. 5ADF58310000
PIAGGIO: R.O. 272156 - 56408R
YAMAHA: R.O. 5ADF58310000



Ø Esterno mm *Ø External mm*	Ø Interno mm *Ø Internal mm*	Spessore mm *Thickness mm*	Ø Fori Fiss. mm *Ø Fixing holes mm*
190	58	4	8

225160210

HONDA: R.O. 45121GAV700ZB
MBK: R.O. 5JHF58310000
YAMAHA: R.O. 5JHF58310000



Ø Esterno mm *Ø External mm*	Ø Interno mm *Ø Internal mm*	Spessore mm *Thickness mm*	Ø Fori Fiss. mm *Ø Fixing holes mm*
190	58	4	10,7

225160230

GILERA: R.O. 564371
PIAGGIO: R.O. 564371 - 56392R



Ø Esterno mm *Ø External mm*	Ø Interno mm *Ø Internal mm*	Spessore mm *Thickness mm*	Ø Fori Fiss. mm *Ø Fixing holes mm*
240	125,5	4	6,5

225160240

MALAGUTI: R.O. 11946500



Ø Esterno mm *Ø External mm*	Ø Interno mm *Ø Internal mm*	Spessore mm *Thickness mm*	Ø Fori Fiss. mm *Ø Fixing holes mm*
200	58	4	9,4

225160250

APRILIA: R.O. AP8113697



Ø Esterno mm *Ø External mm*	Ø Interno mm *Ø Internal mm*	Spessore mm *Thickness mm*	Ø Fori Fiss. mm *Ø Fixing holes mm*
260	60	4	8,5

225160300

MBK: R.O. 5GM2582W0000
YAMAHA: R.O. 5GM2582W0000



Ø Esterno mm *Ø External mm*	Ø Interno mm *Ø Internal mm*	Spessore mm *Thickness mm*	Ø Fori Fiss. mm *Ø Fixing holes mm*
230	116	5	8,6

225160310

YAMAHA: R.O. 5GJ2582T0000

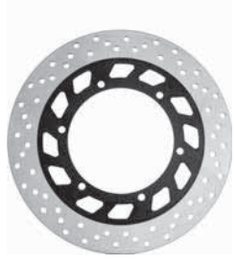

Ø Esterno mm *Ø External mm*	Ø Interno mm *Ø Internal mm*	Spessore mm *Thickness mm*	Ø Fori Fiss. mm *Ø Fixing holes mm*
282	132	5	8,6

225160320

YAMAHA: R.O. 3GM2582WA000 - 5VU2582W0000

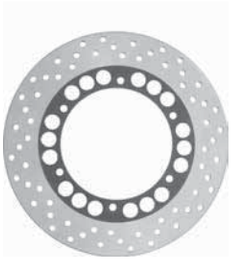

Ø Esterno mm *Ø External mm*	Ø Interno mm *Ø Internal mm*	Spessore mm *Thickness mm*	Ø Fori Fiss. mm *Ø Fixing holes mm*
267	132	5	8,5

225160350

HONDA: R.O. 45351KRJ901



Ø Esterno mm *Ø External mm*	Ø Interno mm *Ø Internal mm*	Spessore mm *Thickness mm*	Ø Fori Fiss. mm *Ø Fixing holes mm*
240	105	4	10,5

225160360

225160361 NEW

HONDA: R.O. 43251MV4000



Ø Esterno mm *Ø External mm*	Ø Interno mm *Ø Internal mm*	Spessore mm *Thickness mm*	Ø Fori Fiss. mm *Ø Fixing holes mm*
220	105	5	10,6

225160370

225160371 NEW

SUZUKI: R.O. 59221-14G00-000



Ø Esterno mm *Ø External mm*	Ø Interno mm *Ø Internal mm*	Spessore mm *Thickness mm*	Ø Fori Fiss. mm *Ø Fixing holes mm*
260	121	4,5	10,3

225160390

YAMAHA: R.O. 5CG2582W0000



Ø Esterno mm *Ø External mm*	Ø Interno mm *Ø Internal mm*	Spessore mm *Thickness mm*	Ø Fori Fiss. mm *Ø Fixing holes mm*
230	84	5	8,5

225162040

YAMAHA: R.O. 1B9F582U0000



Ø Esterno mm *Ø External mm*	Ø Interno mm *Ø Internal mm*	Spessore mm *Thickness mm*	Ø Fori Fiss. mm *Ø Fixing holes mm*
267	132	5	8,5

225162050

YAMAHA: R.O. 1B9F582W0100



Ø Esterno mm *Ø External mm*	Ø Interno mm *Ø Internal mm*	Spessore mm *Thickness mm*	Ø Fori Fiss. mm *Ø Fixing holes mm*
240	92	5	8,5

225162060

GILERA: R.O. 56498R - 597520
PIAGGIO: R.O. 56498R - 649163 - 597520



Ø Esterno mm *Ø External mm*	Ø Interno mm *Ø Internal mm*	Spessore mm *Thickness mm*	Ø Fori Fiss. mm *Ø Fixing holes mm*
240	125	5	6,5

225162070

APRILIA: R.O. 56393R
GILERA: R.O. 56393R - 599315
PIAGGIO: R.O. 56393R - 599315



Ø Esterno mm *Ø External mm*	Ø Interno mm *Ø Internal mm*	Spessore mm *Thickness mm*	Ø Fori Fiss. mm *Ø Fixing holes mm*
260	125	5	6,5

225162080

PIAGGIO: R.O. 597243 - 56397R



Ø Esterno mm *Ø External mm*	Ø Interno mm *Ø Internal mm*	Spessore mm *Thickness mm*	Ø Fori Fiss. mm *Ø Fixing holes mm*
260	125	4	6,5

225162090

HONDA: R.O. 45351KTW901



Ø Esterno mm *Ø External mm*	Ø Interno mm *Ø Internal mm*	Spessore mm *Thickness mm*	Ø Fori Fiss. mm *Ø Fixing holes mm*
256	144	4,5	10,5

225162100

HONDA: R.O. 43251KTW901



Ø Esterno mm *Ø External mm*	Ø Interno mm *Ø Internal mm*	Spessore mm *Thickness mm*	Ø Fori Fiss. mm *Ø Fixing holes mm*
256	144	5	10,5

225162112

DERBI: R.O. 56391R
GILERA: R.O. 56484R - 56391R
PIAGGIO: R.O. 56391R - 56484R



Ø Esterno mm *Ø External mm*	Ø Interno mm *Ø Internal mm*	Spessore mm *Thickness mm*	Ø Fori Fiss. mm *Ø Fixing holes mm*
220	105	4,1	6,6

225162122

GILERA: R.O. 56394R - 649226 - 601749
PIAGGIO: R.O. 649226



Ø Esterno mm *Ø External mm*	Ø Interno mm *Ø Internal mm*	Spessore mm *Thickness mm*	Ø Fori Fiss. mm *Ø Fixing holes mm*
240	105	4,1	6,6

225162132

APRILIA: R.O. AP8133601



Ø Esterno mm *Ø External mm*	Ø Interno mm *Ø Internal mm*	Spessore mm *Thickness mm*	Ø Fori Fiss. mm *Ø Fixing holes mm*
190	68	4,1	8,5

225162142

APRILIA: R.O. AP8133606
BENELLI: R.O. R43810041A0



Ø Esterno mm *Ø External mm*	Ø Interno mm *Ø Internal mm*	Spessore mm *Thickness mm*	Ø Fori Fiss. mm *Ø Fixing holes mm*
240	105	4,5	6,6

225162152

APRILIA: R.O. AP8133627



Ø Esterno mm *Ø External mm*	Ø Interno mm *Ø Internal mm*	Spessore mm *Thickness mm*	Ø Fori Fiss. mm *Ø Fixing holes mm*
240	125	4,1	6,6

225162172

PIAGGIO: R.O. 56478R



Ø Esterno mm *Ø External mm*	Ø Interno mm *Ø Internal mm*	Spessore mm *Thickness mm*	Ø Fori Fiss. mm *Ø Fixing holes mm*
240	125	4,4	6,6

225162191

PEUGEOT: R.O. 766424



Ø Esterno mm *Ø External mm*	Ø Interno mm *Ø Internal mm*	Spessore mm *Thickness mm*	Ø Fori Fiss. mm *Ø Fixing holes mm*
226	70	3,5	8,3

225162200

HONDA: R.O. 45351KGF900



Ø Esterno mm *Ø External mm*	Ø Interno mm *Ø Internal mm*	Spessore mm *Thickness mm*	Ø Fori Fiss. mm *Ø Fixing holes mm*
220	105	4	10,5

225162210

KYMCO: R.O. 00145010



Ø Esterno mm *Ø External mm*	Ø Interno mm *Ø Internal mm*	Spessore mm *Thickness mm*	Ø Fori Fiss. mm *Ø Fixing holes mm*
260	-	4,2	10,5

225162220

KYMCO: R.O. 00143057



Ø Esterno mm *Ø External mm*	Ø Interno mm *Ø Internal mm*	Spessore mm *Thickness mm*	Ø Fori Fiss. mm *Ø Fixing holes mm*
240	-	4	10,5

225162230

KYMCO: R.O. 00143068



Ø Esterno mm *Ø External mm*	Ø Interno mm *Ø Internal mm*	Spessore mm *Thickness mm*	Ø Fori Fiss. mm *Ø Fixing holes mm*
240	-	5	10,5

225162240

KYMCO: R.O. 00143088



Ø Esterno mm *Ø External mm*	Ø Interno mm *Ø Internal mm*	Spessore mm *Thickness mm*	Ø Fori Fiss. mm *Ø Fixing holes mm*
240	88	5	10,5

225162250

KYMCO: R.O. 00145095 / 00145128



Ø Esterno mm *Ø External mm*	Ø Interno mm *Ø Internal mm*	Spessore mm *Thickness mm*	Ø Fori Fiss. mm *Ø Fixing holes mm*
200	58,2	4	10,5

225162260

HONDA: R.O. 43251KTF891



Ø Esterno mm *Ø External mm*	Ø Interno mm *Ø Internal mm*	Spessore mm *Thickness mm*	Ø Fori Fiss. mm *Ø Fixing holes mm*
240	105	5	10,5

225162270

YAMAHA: R.O. 4B52582V0000



Ø Esterno mm *Ø External mm*	Ø Interno mm *Ø Internal mm*	Spessore mm *Thickness mm*	Ø Fori Fiss. mm *Ø Fixing holes mm*
267	132,25	5,10	8,5

225162280

YAMAHA: R.O. 5C2F58310000



Ø Esterno mm *Ø External mm*	Ø Interno mm *Ø Internal mm*	Spessore mm *Thickness mm*	Ø Fori Fiss. mm *Ø Fixing holes mm*
190	-	3,55	8,5

225162290

KYMCO: R.O. 00145090



Ø Esterno mm *Ø External mm*	Ø Interno mm *Ø Internal mm*	Spessore mm *Thickness mm*	Ø Fori Fiss. mm *Ø Fixing holes mm*
260	58	4	10,5

225162300

KYMCO: R.O. 00145121



Ø Esterno mm *Ø External mm*	Ø Interno mm *Ø Internal mm*	Spessore mm *Thickness mm*	Ø Fori Fiss. mm *Ø Fixing holes mm*
260	58	4	10,3

225162310

KYMCO: R.O. 00143120



Ø Esterno mm *Ø External mm*	Ø Interno mm *Ø Internal mm*	Spessore mm *Thickness mm*	Ø Fori Fiss. mm *Ø Fixing holes mm*
260	125	4,80	10,5

225162320

KYMCO: R.O. 00156320



Ø Esterno mm *Ø External mm*	Ø Interno mm *Ø Internal mm*	Spessore mm *Thickness mm*	Ø Fori Fiss. mm *Ø Fixing holes mm*
260	-	4,2	10,5

225162330

MBK: R.O. 4HC2582T0000
YAMAHA: R.O. 4HC2582T0000



Ø Esterno mm *Ø External mm*	Ø Interno mm *Ø Internal mm*	Spessore mm *Thickness mm*	Ø Fori Fiss. mm *Ø Fixing holes mm*
245	115	4	8,5

225162340

YAMAHA: R.O. 1SDF581T0000 - 5VU2581T0100 - 5VU2581T0000 - 59C2581T0000



Ø Esterno mm *Ø External mm*	Ø Interno mm *Ø Internal mm*	Spessore mm *Thickness mm*	Ø Fori Fiss. mm *Ø Fixing holes mm*
267	132	4	8,5

225162350

YAMAHA: R.O. 4B52581T0000



Ø Esterno mm *Ø External mm*	Ø Interno mm *Ø Internal mm*	Spessore mm *Thickness mm*	Ø Fori Fiss. mm *Ø Fixing holes mm*
267	132	4	8,5

225162360

KYMCO: R.O. 00145000



Ø Esterno mm *Ø External mm*	Ø Interno mm *Ø Internal mm*	Spessore mm *Thickness mm*	Ø Fori Fiss. mm *Ø Fixing holes mm*
240	128	4	10.5

225162370

YAMAHA: R.O. 5EUF58310000



Ø Esterno mm *Ø External mm*	Ø Interno mm *Ø Internal mm*	Spessore mm *Thickness mm*	Ø Fori Fiss. mm *Ø Fixing holes mm*
220	88	4	8,4

225162380

YAMAHA: R.O. 1B72582W0000



Ø Esterno mm *Ø External mm*	Ø Interno mm *Ø Internal mm*	Spessore mm *Thickness mm*	Ø Fori Fiss. mm *Ø Fixing holes mm*
245	115	5	8,4

225162390

YAMAHA: R.O. 5B2F582T0000



Ø Esterno mm *Ø External mm*	Ø Interno mm *Ø Internal mm*	Spessore mm *Thickness mm*	Ø Fori Fiss. mm *Ø Fixing holes mm*
270	128	5	8,4

225162401

PIAGGIO: R.O. 666761



Ø Esterno mm *Ø External mm*	Ø Interno mm *Ø Internal mm*	Spessore mm *Thickness mm*	Ø Fori Fiss. mm *Ø Fixing holes mm*
220	95	4	6

225162410

KYMCO: R.O. 00145246



Ø Esterno mm *Ø External mm*	Ø Interno mm *Ø Internal mm*	Spessore mm *Thickness mm*	Ø Fori Fiss. mm *Ø Fixing holes mm*
225	88	4	10,5

225162430

YAMAHA: R.O. 1SDF582W0000



Ø Esterno mm *Ø External mm*	Ø Interno mm *Ø Internal mm*	Spessore mm *Thickness mm*	Ø Fori Fiss. mm *Ø Fixing holes mm*
266	132	5	8,2

225162461

PEUGEOT: R.O. 771049



Ø Esterno mm *Ø External mm*	Ø Interno mm *Ø Internal mm*	Spessore mm *Thickness mm*	Ø Fori Fiss. mm *Ø Fixing holes mm*
226	115	5	6,2

225162502

SYM: R.O. 43121H9A000

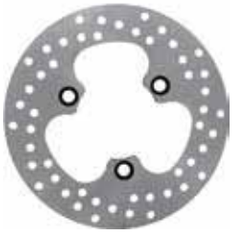

Ø Esterno mm *Ø External mm*	Ø Interno mm *Ø Internal mm*	Spessore mm *Thickness mm*	Ø Fori Fiss. mm *Ø Fixing holes mm*
200	75	4	10,5

225162511

225162512 NEW

SYM: R.O. 45121HHA000



Ø Esterno mm *Ø External mm*	Ø Interno mm *Ø Internal mm*	Spessore mm *Thickness mm*	Ø Fori Fiss. mm *Ø Fixing holes mm*
220	95	4	10,5

225162520

SYM: R.O. 43121HMA000 / 43121HMA000KB



Ø Esterno mm *Ø External mm*	Ø Interno mm *Ø Internal mm*	Spessore mm *Thickness mm*	Ø Fori Fiss. mm *Ø Fixing holes mm*
220	110	5	10

225162540

HONDA: R.O. 45251MGSD81



Ø Esterno mm *Ø External mm*	Ø Interno mm *Ø Internal mm*	Spessore mm *Thickness mm*	Ø Fori Fiss. mm *Ø Fixing holes mm*
320	210	5	10

225162550

HONDA: R.O. 43251MGSD31



Ø Esterno mm *Ø External mm*	Ø Interno mm *Ø Internal mm*	Spessore mm *Thickness mm*	Ø Fori Fiss. mm *Ø Fixing holes mm*
240	120	5	10

225162561

YAMAHA: R.O. 59C2582W0000



Ø Esterno mm *Ø External mm*	Ø Interno mm *Ø Internal mm*	Spessore mm *Thickness mm*	Ø Fori Fiss. mm *Ø Fixing holes mm*
282	134	5	10,5

225162570

PEUGEOT: R.O. 769432



Ø Esterno mm *Ø External mm*	Ø Interno mm *Ø Internal mm*	Spessore mm *Thickness mm*	Ø Fori Fiss. mm *Ø Fixing holes mm*
226	126	4,5	6,3

225162581

PIAGGIO: R.O. 667032



Ø Esterno mm *Ø External mm*	Ø Interno mm *Ø Internal mm*	Spessore mm *Thickness mm*	Ø Fori Fiss. mm *Ø Fixing holes mm*
240	102	5	8,5

225162591

PIAGGIO: R.O. 58546R - 58546R5



Ø Esterno mm *Ø External mm*	Ø Interno mm *Ø Internal mm*	Spessore mm *Thickness mm*	Ø Fori Fiss. mm *Ø Fixing holes mm*
230	115	4	10,5

225162600

KYMCO: R.O. 00143081



Ø Esterno mm *Ø External mm*	Ø Interno mm *Ø Internal mm*	Spessore mm *Thickness mm*	Ø Fori Fiss. mm *Ø Fixing holes mm*
200	89,5	4	10,5

225162610

KYMCO: R.O. 00145106

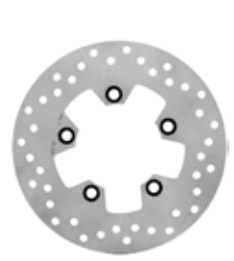

Ø Esterno mm *Ø External mm*	Ø Interno mm *Ø Internal mm*	Spessore mm *Thickness mm*	Ø Fori Fiss. mm *Ø Fixing holes mm*
200	89,5	4	10,5

225162620

YAMAHA: R.O. 2DPF582U0000

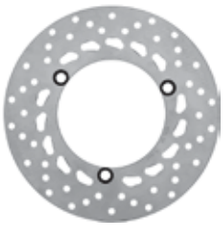

Ø Esterno mm *Ø External mm*	Ø Interno mm *Ø Internal mm*	Spessore mm *Thickness mm*	Ø Fori Fiss. mm *Ø Fixing holes mm*
300	100	5	13,5

225162630

YAMAHA: R.O. 2DPF582W0000

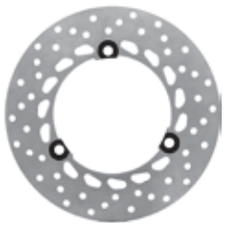

Ø Esterno mm *Ø External mm*	Ø Interno mm *Ø Internal mm*	Spessore mm *Thickness mm*	Ø Fori Fiss. mm *Ø Fixing holes mm*
230	120	4,5	10,5

225162640

HONDA: R.O. 45351KZL931 - 45351KVG902 - 45351KVG951



Ø Esterno mm *Ø External mm*	Ø Interno mm *Ø Internal mm*	Spessore mm *Thickness mm*	Ø Fori Fiss. mm *Ø Fixing holes mm*
220	58	4	10,5

225162650

YAMAHA: R.O. 52SF582T0000



Ø Esterno mm *Ø External mm*	Ø Interno mm *Ø Internal mm*	Spessore mm *Thickness mm*	Ø Fori Fiss. mm *Ø Fixing holes mm*
267	115	4	8,5

225085020

PIAGGIO 50-90: Vespa 50-90
PIAGGIO 125: Vespa Primavera • Vespa Primavera ET3
R.O. 100484



225085040

PIAGGIO 125-150: Vespa PX-PE (Fino al 1982 - *Till 1982*) • Vespa Sprint • Vespa GL
R.O. 078480



225085050

225085053

PIAGGIO 125-150-200: Vespa PXE Arcobaleno
R.O. 194433



225085070

PIAGGIO 150: Vespa Super
R.O. 110375-157743



225085080

PIAGGIO 125: Vespa PX T5
R.O. 2427724



225088023

PIAGGIO 125-150: Vespa 125-150 58-60
R.O. 023831





121850480

VITE FISSAGGIO RUOTA | *WHEEL FIXING BOLT*
Confezione 4 pz. | *4 Pcs Packing*

PIAGGIO 50-90: Vespa 50-90 66-73
R.O. 070156



121860270

KIT PRIGIONIERO TAMBURO | *DRUM KITSTUD*

PIAGGIO 125-150-200: Vespa PX • Vespa GL • Vespa Sprint



225084000

TAPPO IN ACCIAIO PER TAMBURO POSTERIORE Ø 39 | *INOX REAR DRUM PLUG Ø 39*
Confezione 5 pz. | *5 Pcs Packing*

PIAGGIO: Vari modelli - *Various models*
R.O. 182546



225084010

TAPPO IN ACCIAIO PER TAMBURO ANTERIORE Ø 32 | *INOX REAR DRUM PLUG Ø 32*
Confezione 5 pz. | *5 Pcs Packing*

PIAGGIO 50: Ape • Ape P • Ape FL-FL2 • Ape FL3 Europa • Ape Mix • Ape RST Mix • Ape TM P
R.O. 181757



225084023

TAPPO TAMBURO | *DRUM PLUG*
Plastica | *Plastic Type*

PIAGGIO 125-150: Vespa PX • Cosa CL-CLX • Cosa 2
R.O. 198015





CILINDRETTI FRENO

BRAKE CYLINDERS

Modello *Model*	**CC**	**Da** *From*	**A** *To*	**Telaio** *Frame*	**Pompa freno** *Master cylinder brake*	**Cilindretto posteriore destro** *Rear right cylinder*	**Cilindretto posteriore sinistro** *Rear left cylinder*	**Cilindretto anteriore** *Front cylinder brake*
PIAGGIO								
APE MIX 2T	50	1998	2008	C8000	-	**225140150** (R.O. 2457652)	**225140150** (R.O. 2457652)	-
APE	50	2009	2017	C8000	**225130040** (R.O. 249519)	**225140150** (R.O. 2457652)	**225140150** (R.O. 2457652)	-
APE FL - FL2	50	1989	1995	TL6T	**225130040** (R.O. 249519)	**225140150** (R.O. 2457652)	**225140150** (R.O. 2457652)	-
APE FL3 EUROPA	50	1996	1999	TL5T	**225130040** (R.O. 249519)	**225140150** (R.O. 2457652)	**225140150** (R.O. 2457652)	-
APE RST MIX	50	1999	2003	C8000	**225130040** (R.O. 249519)	**225140150** (R.O. 2457652)	**225140150** (R.O. 2457652)	-
APE P	50	1980	1985	-	-	**225140070** (R.O. 1745292)	**225140070** (R.O. 1745292)	-
APE TMP	50	1980	1989	-	-	**225140070** (R.O. 1745292)	**225140070** (R.O. 1745292)	-
APE 1° Serie	50	-	-	-	-	**225140060** (R.O. 1174446)	**225140060** (R.O. 1174446)	-
COSA 2	125	1991	1997	-	**225130120** (R.O. 229254)	**225140170** (R.O. 228828)	**225140170** (R.O. 228828)	**225140160** (R.O. 248846)
COSA CL-CLX	125	1988	1991	-	**225130120** (R.O. 229254)	**225140170** (R.O. 228828)	**225140170** (R.O. 228828)	**225140160** (R.O. 248846)
MP	175	-	-	-	-	**225140080** (R.O.076031)	**225140090** (R.O. 076032)	-
APE MP 501-P601	220	1978	1996	MPR2	**225130060** (R.O. 140251)	-	-	-
APE TM P602	220	1982	1983	ATM1T	**225130130** (R.O. 197433)	**225140130** (R.O. 2451932)	**225140130** (R.O. 2451932)	**225140120** (R.O. 245194)
APE TM P703-P703V	220	1984	2005	ATM2T\T	-	**225140130** (R.O. 2451932)	**225140130** (R.O. 2451932)	**225140120** (R.O. 245194)
APE CAR P2-P3	220	1978	1985	AF3T	**225130080** (R.O. 1800365)	**225140110** (R.O. 137894)	**225140110** (R.O. 137894)	**225140100** (R.O. 137891)
APE CAR P2-P3	220	1978	1985	AF4T	**225130140** (R.O. 229217)	**225140110** (R.O. 137894)	**225140110** (R.O. 137894)	**225140100** (R.O. 137891)
APE TM	220	2009	2016	T10000	**225130090** (R.O. 249520)	**225140130** (R.O. 2451932)	**225140130** (R.O. 2451932)	
APE TM P703 FL2	220	1999	2007	ATM2T\3T	**225130090** (R.O. 249520)	**225140130** (R.O. 2451932)	**225140130** (R.O. 2451932)	**225140130** (R.O. 2451932)
APE TM P703-P703V, FL2	220	1984	2005	ATM2T\T	**225130090** (R.O. 249520)	**225140130** (R.O. 2451932)	**225140130** (R.O. 2451932)	**225140130** (R.O. 2451932)
APE POKER BENZINA	420	1993	1993	M4R1T	**225130110** (R.O. 265195)	**225140140** (R.O. 227549)	**225140140** (R.O. 227549)	**225140130** (R.O. 2451932)
APE CAR - MAX DIESEL	420	1986	1996	AFD3T	**225130090** (R.O. 249520)	**225140130** (R.O. 2451932)	**225140130** (R.O. 2451932)	-
APE CAR - MAX DIESEL	420	1986	1996	AFD1T	**225130100** (R.O. 179379)	**225140130** (R.O. 2451932)	**225140130** (R.O. 2451932)	-
APE POKER DIESEL	420	1993	1997	M4R3T	**225130110** (R.O. 265195)	**225140140** (R.O. 227549)	**225140140** (R.O. 227549)	**225140130** (R.O. 2451932)
APE TM DIESEL LCS	420	2005	2012	T10000	**225130090** (R.O. 249520)	**225140130** (R.O. 2451932)	**225140130** (R.O. 2451932)	**225140130** (R.O. 2451932)
APE TM P703-P703V DIESEL	420	1987	2004	ATD1T	**225130090** (R.O. 249520)	**225140130** (R.O. 2451932)	**225140130** (R.O. 2451932)	**225140130** (R.O. 2451932)
QUARGO	500	2005	2017	P10000	-	-	**225140140** (R.O. 227549)	-
QUARGO DIESEL	750	2004	2006	P10000	-	**225140140** (R.O. 227549)	**225140140** (R.O. 227549)	**225140130** (R.O. 2451932)



225140060

PIAGGIO: R.O. 117446



225140070

PIAGGIO: R.O. 1745292



225140080

PIAGGIO: R.O. 076031



225140090

PIAGGIO: R.O. 076032



225140100

PIAGGIO: R.O. 137891



225140110

PIAGGIO: R.O. 137894



225140120

PIAGGIO: R.O. 245194



225140130

PIAGGIO: R.O. 245193



225140140

PIAGGIO: R.O. 227549



225140150

PIAGGIO: R.O. 2457652



225140160

PIAGGIO: R.O. 248846



225140170

PIAGGIO: R.O. 228828





SERIE GUARNIZIONI CILINDRETTI FRENO - *BRAKE CYLINDERS GASKET SETS*

225140010

Anteriore | *Front*
4 Pezzi | *4 Pcs*
PIAGGIO: Ape MP



225140020

Anteriore | *Front*
4 Pezzi | *4 Pcs*
PIAGGIO: Ape TMP 602



225140030

Posteriore | *Rear*
8 Pezzi | *8 Pcs*
PIAGGIO: Ape 50



225140040

Posteriore | *Rear*
8 Pezzi | *8 Pcs*
PIAGGIO: Ape MP Mpr-Mpv-175 Mp



225140050

Posteriore | *Rear*
8 Pezzi | *8 Pcs*
PIAGGIO: Ape TM P602





225130040

PIAGGIO: R.O. 249519



225130060

PIAGGIO: R.O. 140251



225130080

PIAGGIO: R.O. 1800365



225130090

PIAGGIO: R.O. 249520



225130100

PIAGGIO: R.O. 179379



225130110

PIAGGIO: R.O. 265195



225130120

PIAGGIO: R.O. 229254



225130130

PIAGGIO: R.O. 197433



225130140

PIAGGIO 220: R.O. 229217



SERIE GUARNIZIONI POMPE FRENO - *BRAKE MASTER CYLINDERS GASKET SETS*

225130010

PIAGGIO 50: Ape



225130020

PIAGGIO 220: Ape Mp



225130030

PIAGGIO 220: Ape TM P602-TM P703



121860250

PRIGIONIERO FLANGIA TAMBURO POSTERIORE | *REAR DRUM FLANGE STUD*
Confezione 10 pz. | *10 Pcs Packing*

PIAGGIO 50: Vespa PK • Vespa FL • Vespa Special
PIAGGIO 50 -125: Vespa PK XL
PIAGGIO 125: Vespa Primavera ET3 • Vespa FL
R.O. 000456



121870613

CAMMA FRENO | *BRAKE CAM*

PIAGGIO 50: Ape P 80-85 • Ape TM P 85-89 • Ape FL-FL2 89-95 • Ape FL3 Europa 96-99
PIAGGIO 125-150: Vespa
VBA-VBB-VNA-VNB-VNC-VBC
R.O. 131942



225088033

DISCO PARAPOLVERE | *DUST DISC*
Per cerchio 10" | *For 10" Rim*

PIAGGIO 125-150: Vespa Super
VBC1-VNC1
R.O. 110379



225088043

DISCO PARAPOLVERE | *DUST DISC*
Per cerchio 8" | *For 8" Rim*

PIAGGIO 125: Vespa GT
PIAGGIO 150: Vespa Sprint
PIAGGIO 180: Vespa Rally
VSD1-VNL2- VLB1
R.O. 078482



IMPIANTO ELETTRICO

ELECTRICAL SYSTEM
INSTALACION ELECTRICA
SYSTÈME ÉLECTRIQUE

Bougies	*Bujias*	*Spark Plugs*	**CANDELE DI ACCENSIONE**	**530**
Accessoires Bougies	*Accesorios Bujias*	*Spark Plugs Accessories*	**ACCESSORI CANDELE**	**538**
Optiques de phare	*Pilotos*	*Complete Lights*	**FANALI COMPLETI**	**542**
Clignotants	*Intermitentes*	*Blinkers*	**FRECCE**	**548**
Cabochons de Clignotant	*Tulipas*	*Blinkers Lenses*	**LENTI FRECCIA**	**556**
Cabochons de Optiques	*Tulipas de Pilotos*	*Complete Lights Lenses*	**LENTI FANALI**	**563**
Accessoires Optiques de phare et Clignotants	*Accesorios Pilotos y Intermitentes*	*Lights and Blinkers Accessories*	**ACCESSORI FANALI E FRECCE**	**565**
Fiches pour Ampoules	*Portalamparas*	*Holders for Bulbs*	**PORTALAMPADA**	**570**
Ampoules	*Lamparas*	*Lamps*	**LAMPADINE**	**572**
Bandes Lumineuses	*Bandas Luminosas*	*Luminous Bands*	**FASCE LUMINOSE**	**585**
Boutons	*Botones*	*Buttons*	**PULSANTI**	**587**
Commutateurs de Clignotants	*Interruptores Intermitentes*	*Blinkers Switches*	**DEVIO FRECCE**	**590**
Commutateurs Feu	*Desviadores Luces*	*Lights Switches*	**DEVIO LUCI**	**592**
Klaxon	*Claxons*	*Horns*	**AVVISATORI ACUSTICI**	**596**
Commutateurs	*Interruptores*	*Switches*	**INTERRUTTORI**	**600**
Résistances	*Resistencias*	*Resistors*	**RESISTENZE**	**605**
Relais	*Relés*	*Relays*	**RELÈ**	**606**
Capteurs / Thermostats	*Sensores / Termostatos*	*Sensors / Thermostats*	**SENSORI / TERMOSTATI**	**611**
Fusibles	*Fusibles*	*Fuses*	**FUSIBILI**	**630**
CDI	*Centralinas Electronicas*	*CDI*	**CENTRALINE**	**631**
Accessoires CDI	*Accesorios Centralinas Electronicas*	*CDI Accessories*	**ACCESSORI CENTRALINE**	**640**
Bobines	*Bobinas*	*Coils*	**BOBINE**	**641**
Règulateurs de Tension	*Reguladores de Tension*	*Regulators*	**REGOLATORI DI TENSIONE**	**658**
Démarreurs	*Motores de Arranque*	*Starter Motors*	**MOTORINI D'AVVIAMENTO**	**673**
Portes-Balais	*Portaescobillas*	*Brush Holders*	**ANELLI PORTASPAZZOLE**	**685**
Stators	*Estators*	*Stators*	**STATORI**	**686**
Rotors	*Rotores*	*Rotors*	**ROTORI**	**700**
Volants Magnetique	*Volante completo*	*Complete Magnetos*	**VOLANI COMPLETI**	**701**
Accessoires Volants Magnetique, Rotors et Stators	*Accesorios Volante, Rotores y Estators*	*Magnetos, Rotors and Stators Accessories*	**ACCESSORI VOLANI, ROTORI E STATORI**	**706**
Capteur	*Pick Up*	*Pick Up*	**PICK UP**	**707**
Contacteurs	*Cerraduras de Contacto*	*Key Sets Main Switches*	**QUADRI CHIAVE**	**708**
Commutateurs de Demarrage	*Interruptores de Arranque*	*Ignition Switches*	**COMMUTATORI ACCENSIONE**	**717**
Câblages	*Cableados*	*Wirings*	**CABLAGGI**	**719**
Accessoires Câblages	*Accesorios Cableados*	*Wirings Accessories*	**ACCESSORI CABLAGGI**	**720**
Condensateur	*Condensadores*	*Condensators*	**CONDENSATORI**	**721**
Connecteurs Electriques	*Connectores*	*Electrical Connectors*	**CONNETTORI**	**723**
Vis platiné	*Llaves de Contacto*	*Platiners*	**CONTATTI**	**726**
Prises de Courant	*Tomas de Corriente*	*Sockets*	**PRESE DI CORRENTE**	**730**



CANDELE DI ACCENSIONE

SPARK PLUGS

Codice RMS *RMS Code*	Codice NGK *NGK Code*	Stock N°	Terminale-*Terminal* 1 2 3	
246215073	B6ES	7310	3	
246215051	B6HS	4510	3	
246215074	B7ES	1111	3	
246215054	B7HS	5110	3	
246215078	B8EG	3430	3	
246215058	B8ES	2411	3	
246215055	B8HS	5510	3	
246215987	B9EG	3530	3	
246215052	B9ES	2611	3	
246215992	B9HS	5810	3	
246215965	B10EG	3630	3	NEW
246215014	BKR7EKC	7354	2	
246215066	BM6A	5921	3	
246215134	BM6F	6221	3	NEW
246215017	BP6ES	7811	3	
246215080	BP6HS	4511	3	
246215064	BP7ES	2412	3	
246215079	BP8ES	2912	3	
246216010	BR10ECMIX	3006	2	
246215022	BPR6ES	7822	3	
246215068	BPR7ES	2023	3	
246215036	BPR7HS	6422	3	
246215019	BPR8ES	3923	3	
246215023	BR10EG	3830	3	
246215082	BR10ES	4832	3	
246215081	BR6ES	4922	3	
246215029	BR6HS	3922	3	
246215072	BR6HSA	4296	1	
246215070	BR7ES	5122	3	
246215008	BR7HS	4122	3	
246216023	BR8ECM	3035	2	
246215045	BR8EG	3130	3	
246215009	BR8ES	5422	3	
246215000	BR8HS	4322	3	
246216039	BR9EG-N-8	2689	2	
246215020	BR9HS	4522	3	
246215069	BR8HSA	5539	1	
246215063	BR9EG	3230	3	
246215044	BR9EIX	3981	3	
246215050	BR9ES	5722	3	
246215083	C7HSA	4629	1	
246215185	CMRSH	7599	2	NEW
246215187	CMR6H	3365	2	NEW
246215018	CPR7EA-9	3901	1	
246215084	CPR8E	7411	2	
246215027	CPR8EA-9	2306	1	
246216059	CPR8EB-9	6607	2	NEW
246215071	CR10EK	2360	1	
246215038	CR6HSA	2983	1	
246215049	CR7E	4578	1	
246215059	CR7EB	4663	2	
246215041	CR7EIX	7385	3	
246215037	CR7EK	7546	1	
246215056	CR7EKB	4455	2	

Codice RMS *RMS Code*	Codice NGK *NGK Code*	Stock N°	Terminale-*Terminal* 1 2 3	
246215001	CR7HSA	4549	1	
246215047	CR8E	1275	1	
246215048	CR8EB	7784	2	
246215003	CR8EH-9	5666	1	
246215039	CR8EHIX-9	3797	1	
246215042	CR8EIX	4218	3	
246215060	CR8EK	3478	1	
246215011	CR8EKB	4374	2	
246215006	CR9E	6263	1	
246215061	CR9EB	6955	2	
246215007	CR9EH-9	7502	1	
246215035	CR9EHIX-9	6216	1	
246215012	CR9EIA-9	6289	1	
246216087	CR9EIB-9	92579	2	
246215021	CR9EIX	3521	3	
246215004	CR9EK	4548	1	
246215030	D7EA	7912	1	
246215024	D8EA	2120	1	
246215552	DCPR7E	3932	3	
246215559	DCPR8E	4179	2	
246215053	DCPR8E	4339	3	
246215076	DCPR8EIX	6546	3	
246215062	DCPR8EKC	7168	2	
246215025	DCPR9E	2641	2	
246215026	DPR6EA-9	5531	1	
246215010	DPR7EA-9	5129	1	
246215002	DPR8EA-9	4929	1	
246215065	DR7EA	7839	1	
246215034	DR7ES	3123	1	
246215005	DR8EA	7162	1	
246215016	DR8ES	5423	1	
246215013	DR8ES-L	2923	1	
246215015	DR9EA	3437	1	
246215031	ER9EH-6N	1673	1	
246215613	IFR6G-11K	1314	2	
246215067	IMR9C-9H	6777	1	
246215033	IMR9C-9HES	5766	1	
246215043	IMR9E-9HES	7556	1	
246215032	JR9B	3188	1	
246215091	KR8DI	4742	1	
246215040	KR9CI	7795	2	
246216158	LMAR7A-9	4908	1	
246215046	LKAR8AI-9	6706	2	
246215057	LMAR8A-9	4313	1	
246216162	LMAR8D-J	93444	2	
246216167	LMAR9D-J	1633	3	NEW
246216155	LKAR8BI9	1553	1	
246216171	MAR10A-J	4706	2	
246215028	MAR8B-JDS	8765	2	
246216172	MAR9A-J	6869	2	
246215077	PMR8B	6378	2	
246216269	R0045Q-10	4216	1	
246216275	R0373A-10	4940	1	
246216283	R0451C-10	92278	1	
246216285	R0465B-10	7506	1	
246216177	SILMAR10A9S	7764	2	
246216178	SILMAR9A9S	6213	2	



Codice RMS *RMS Code*	Barcode	Codice Champion *Champion Code*	
246210700		A59C	
246210710		C53CX	
246210730		C55CX	
246210740		C55R	
246211060		CCH10	
246210820		CCH654	
246210750		CCH686	
246210720		CCH693	
246210790		CCH709	
246211580		CCH830	
246211130		CCH896	
246211790		CCH889	
246211100		CCH936M	
246213050		CCH696	
246210760		C61	
246210780		C63YC	
246210970		CJ6	
246210980		CJ7Y	
246210120		CJ8	
246213020		CCH514	
246211020		D6	
246211030		D9	
246211040		DJ8J	
246212990		CCH587	
246211070		J4C	
246211080		J8C	
246211090		L77JC4	
246210200		L78C	
246210130		L82C	
246210590		OE068	
246211720		OE004 - RN9YCC	
246211400		OE005 - RC9YC	
246210150		OE006/T10	

Codice RMS *RMS Code*	Barcode	Codice Champion *Champion Code*	
246211120		OE007 - L87YC	
246211690		OE008 - RN7YCC	
246210260		OE010-N7YC	
246211190		OE012 - N7BYC	
246211340		OE013 - RC12YC	
246211380		OE014 - RC7YCC	
246211160		OE015 - N12YC	
246211680		OE018 - RN7YC	
246210960		OE023 - C9YCC	
246211390		OE026 - RC8DMC	
246211470		OE031 - RES9YCC4	
246210100		OE037-L86C	
246210140		OE038/T10	
246211410		OE039 - RC9YC4	
246210330		OE042-RN12YC	
246211620		OE045 - RN11YCC	
246211710		OE048 - RN9YC4	
246211610		OE049 - RN11YC4	
246211600		OE051 - RN11YC	
246211320		OE052 - RA4HCX	
246211140		OE059 - L92YC	
246211570		OE064 - RL82YC	
246211150		OE065 - N11YC	
246210280		OE073-RA4HC	
246210340		OE074-N5C	
246210290		OE077-RC7BYC4	
246210360		OE078-N3G	
246210230		OE079-N4C	
246210240		OE083-RA6HC	
246210320		OE087-N6YC	
246210270		OE091-RN2C	
246210940		OE094 - RC6YCC	
246211640		OE098 - RN4C	



CANDELE DI ACCENSIONE

SPARK PLUGS

Codice RMS *RMS Code*	Barcode	Codice Champion *Champion Code*	
246210920		OE103 - A59GC	
246210600		OE108-RN3C	
246210930		OE112 - A6GC	
246210220		OE122-RG4PHP	
246211330		OE186 - RA8YCX4	
246210110		OE001	
246210430		OE086	
246211220		P7	
246211230		P8Y	
246211240		P-RA7HC	
246210680		P-RG4HCC	
246211250		P-RG6HCC	
246211260		P-RG7C	
246210400		P-RZ7HC	
246211270		P-RZ9HC	
246210830		QA55V	
246210840		QC57	
246210850		QC57C	
246210860		QC59C	
246210870		QC59YC	
246210880		QC61YC	
246211280		QJ19LM	
246210890		QL55	
246211290		QL77JC4	
246211300		QN19V	
246211310		RA2HC	
246210350		RA59GC	
246210300		CCH810	
246211350		RC14YC	
246211360		RC7PYCBX	
246211370		CCH444	
246211440		CCH863	
246211450		RD16	

Codice RMS *RMS Code*	Barcode	Codice Champion *Champion Code*	
246211830		REA6YC	
246211460		CCH991	
246211480		RF11YC	
246211820		OE241	
246210910		CCH992	
246211810		RG59V	
246210250		RG6YC	
246211500		RG6YCA	
246211510		RH10C	
246211520		RH12	
246211530		RH8C	
246211540		RJ12C	
246211550		RJ18YC	
246210180		RJ19LM	
246211560		RJ6C	
246210310		RL78C	
246211590		RL87YC	
246211630		RN13LYC	
246210670		RN1C	
246211650		RN57YCC	
246211730		RS14YC	
246211740		RS14YC6	
246211750		RV15YC4	
246211760		RV17YC	
246211770		UL81C	
246211780		W14	
246211800		Z9Y	
246213090		8022/T10	NEW
246213100		8035/T10	NEW



CANDELE POWERSPORT - *POWERSPORT SPARK PLUGS*

Codice RMS *RMS Code*	Barcode	Codice Champion PowerSport *Code Champion PowerSport*	Codice NGK Iridium *Code NGK Iridium*	Codice NGK *Code NGK*	Applicazioni *Applications*
246210570		**8018-1**		**BPR4FS** **BPR5FS**	
246210580		**8071-1**		**BCPR7E** **BKR5E** **BKR5EVX**	
246210460		**8332-1**	**BPR7EIX**	**BPR7ES** **BP7ES**	**Moto Guzzi** anni *(years)* 90 **BMW** boxer anni *(years)* 70 **Yamaha** monocilindrici 4T, serie Xv-Xs *(Single Cyl. 4 Stroke, Xv Xs Series)*
246213060		**CCH84051**	**BPR5EIX**	**BPR4ES** **BP5ESA**	**Harley Davidson** 1340
246210490		**8415-1**	**BPR6EIX**	**BP5ES** **BP6ES** **BPR6ES** **BPR5ES**	**BMW** boxer anni *(years)* 80-90 **Harley Davidson** anni *(years)* 70-80 **Moto Guzzi** anni *(years)* 90-00 **Yamaha** serie Xs 1100 *(Xs 1100 Series)*
246210420		**CCH8654E**	-	**CR10E** **CR10EK**	**Benelli** 900 **Kawasaki** Serie *(Series)* Z-ZX-ZRX-ZZR **Mv Agusta** 750-910 **Piaggio** Vespa G.T. 125 **Suzuki** Serie *(Series)* GSF-SV-GSXR **Triumph** 675-800-955 **Yamaha** Serie *(Series)* FZ-FZR-FZS-YZF
246210500		**CCH8698E**	**CR8EIX CR8EIX-9** **CR7EIX CR9EIX-9**	**CR6E** **CR7E** **CR8EK** **CR9EK** **CR9E** **CR8EH-9** **CR9EH-9**	**Piaggio** Scooter 4T *(4 Stroke)* **Peugeot** **Suzuki** Scooter-Serie *(Series)* SV-DL-GSXR **Moto Guzzi** **Yamaha** Scooter 4 T *(4 Stroke)*, Serie *(Series)* FJR-WR 4T *(4 Stroke)*-TMax **Kymco** motori 4T raffeddati ad acqua *(Kymco 4 Stroke water cooled engine)* **Kawasaki** Serie *(Series)* ZX-ZZR-ER-KX **Honda** SH 125-150 Serie *(Series)* CBR-VFR-Transalp 90, Serie *(Series)* Silver Wing
246210510		**CCH88091**	**DPR9EIX** **DR8EIX** **DR9EIX**	**D8EA** **D9EA** **DP8EA-9** **DPR8EA-9** **DPR9EA-9** **DR7ES** **DR8EA** **DR9EA**	**BMW** Serie *(Series)* F-K 1100 1200 **Buell** **Ducati** 2V Aria *(Air cooled)* - 851-Serie *(Series)* 1000 Acqua *(Water cooled)* **Harley Davidson** Serie *(Series)* 883-1200 **Honda** Serie *(Series)* XL-XR-CBX-CBR-VFR **Kawasaki** Serie *(Series)* GPZ-GPX-ER-KLE **Ktm** 450-520-625-1000 **Suzuki** Serie *(Series)* GSX-DR 125 250 **Yamaha** Serie *(Series)* XT 250>600-FZ-FZR
246210520		**CCH88101**	**DCPR7EIX**	**DCPR6E** **DCPR7E** **DPR7EA-9** **DCPR8E**	**Harley Davidso**n 883-1200-1584 Custom Giapponesi *(Japanese Custom Bike)* **Ktm** 450-525-640
246210410		**CCH88121**	**DPR7EIX-9**	**D6EA** **DP7EA-9** **DPR6EA-9** **DPR7EA-9**	**BMW** K75-K100 **Harley Davidson** 883-1450 Custom Giapponesi *(Japanese Custom Bike)* **Kymco** Scooter
246210530		**8814-1**	**BPR6HIX**	**BP6HS** **BP8HS** **BPR7HS** **BPR8HS**	**Aprilia** **Harley Davidson**
246210550		**CCH89021**	**BR8EIX**	**B8ES** **B9ES** **B10ES** **BR7ES** **BR8ES** **BR9ES**	**Moto Guzzi** V75 **Piaggio** Vespa PK 50 - Vespa Cosa 125 200 **Piaggio** scooter 50 2T *(2 Stroke)* **Honda-Kawasaki-Yamaha** 2T *(2 Stroke)*
246210560		**CCH89041**	**BR9EIXBR8EIX**	**BR9EG** **BR8EG**	**Aprilia** RX-RS 50 125 **Cagiva** 125 2T *(2 Stroke)* 90-00 **Derbi** Senda 50 **Gilera** 125 2T *(2 Stroke)* 80-90 **Honda** NS-NSR-MTX 125 **Moto Guzzi** 650 750 **Piaggio** 2T *(2 Stroke)* 50>200 **Husqvarna-Kawasak-Ktm-Suzuki-Yamaha** 2T *(2 Stroke)* Cross

DIMENSIONI CANDELE POWERSPORT - *POWERSPORT SPARK PLUGS DIMENSIONS*

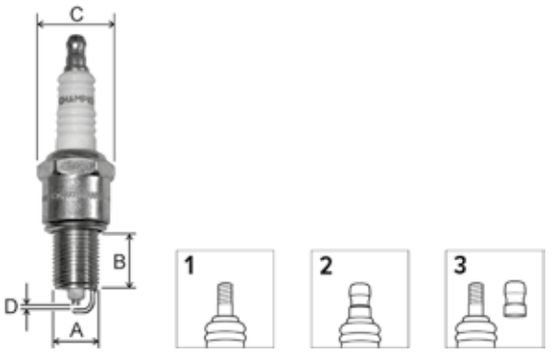

Codice RMS *RMS Code*	Modello *Model*	A mm	B mm	C mm	D mm	Terminale *Terminal*
246210410	CCH88121	12	19	18	0,8	3
246210420	CCH8654E	10	19	16	0,8	3
246210460	8332	14	19	21	0,7	2
246213060	CCH84051	14	19	21	1	2
246210490	8415	14	19	21	0,7	2
246210500	CCH8698E	10	19	16	0,8	3
246210510	CCH88091	12	19	18	0,8	3
246210520	CCH88101	12	19	16	1	2
246210530	8814	14	12	21	0,7	2
246210550	CCH89021	14	19	21	1	2
246210560	CCH89041	14	19	21	0,7	2
246210570	8018	14	11,7	16	0,9	2
246210580	8071	14	19	16	0,9	2



CANDELE MOTORI MARINI/AGRICOLI - *MARINE/AGRICULTURAL ENGINES SPARK PLUGS*

Codice RMS *RMS Code*	Barcode	Codice Champion *Champion Code*
246213010		CCH123
246211850		CCH3071
246211860		CCH3980
246211870		CCH83041
246211880		CCH84011
246211890		CCH89001
246213060		CCH84051
246211900		CCH846
246211910		CCH862
246211920		CCH8585
246211930		CCH848
246211940		CCH515
246211950		D16
246211960		CCH502
246211970		CCH543
246211980		CCH851
246211990		DJ7J
246212000		CCH855
246212010		CCH844
246212020		H12
246212030		CCH511
246212040		J17LM
246212050		CCH8455
246212060		J19LM
246213040		CCH859
246212070		CCH8615
246212080		CCH823
246212090		CCH597
246212110		CCH885M
246212120		L76V/110
246212130		CCH833M
246212140		CCH924M

Codice RMS *RMS Code*	Barcode	Codice Champion *Champion Code*
246212150		CCH923
246212160		CCH890
246212170		OE011
246212180		OE041
246212190		OE148
246212200		CCH910
246212210		CCH958
246210620		CCH7919
246210630		CCH9005
246212220		CCH950M
246213000		CCH955M
246212230		CCH956M
246213030		CCH7953
246212240		CCH946
246210640		CCH9809
246212250		QCJ6Y
246212260		QCJ8Y
246212270		CCH876M
246212280		CCH886M
246212290		CCH898M
246212300		CCH941M
246212310		CCH943M
246212320		CCH883
246212330		CCH838M
246212340		CCH938M
246212350		CCH939M
246212360		CCH931M
246212370		CCH932M
246212380		CCH933M
246212390		CCH934M
246212400		CCH318
246212410		CCH434



CANDELE DI ACCENSIONE

SPARK PLUGS

Codice RMS *RMS Code*	Barcode	Codice Champion *Champion Code*
246212420		CCH893
246212440		CCH870
246212450		CCH860
246212460		CCH872
246212470		CCH865
246212480		CCH940
246212490		CCH979
246212500		CCH129
246212510		RF14YC/013
246212520		CCH409
246212530		CCH857
246212540		CCH14
246212550		CCH63
246212560		RJ17LM
246212570		RJ19LMC
246212580		RJ88P
246212590		CCH871
246212600		CCH929
246212610		CCH405
246212620		CCH904
246212630		CCH959M
246212640		CCH7401
246212650		CCH401
246210660		RS14PYP5
246212660		CCH15
246212670		CCH909
246212680		CCH113
246212690		CCH406
246212700		RV8C
246212710		CCH942M
246212720		CCH930
246212730		CCH400
246212740		RY4C

Codice RMS *RMS Code*	Barcode	Codice Champion *Champion Code*
246212750		RZ7C
246212760		RZF10
246212770		CCH555
246212780		UJ11G/014
246212790		CCH824
246212800		CCH831M
246212810		CCH842
246212820		V57C-ST/003
246212830		CCH802
246212840		CCH510
246212850		CCH561
246212860		CCH518
246212870		CCH520
246212880		CCH589
246212890		CCH988
246212910		CCH982
246212920		CCH980
246212930		CCH557
246212940		CCH614
246212950		CCH588
246212960		CCH517
246212970		XMJ20/014
246212980		CCH877
246211840		CCH525
246213070		CCH852
246213080		CCH993

246210440

CANDELETTA DIESEL | *DIESEL GLOW PLUG*

PIAGGIO 420: Ape TM 05-12 • Ape Calessino 07-12 • Ape MP601 Classic 06-13 • Ape CarMax 86-96 • Ape Poker 93-97 • Ape TM P703-P703V 87-04
(Codice Champion CH260)
R.O. 438036



246210450

CANDELETTA DIESEL | *DIESEL GLOW PLUG*

LIGIER 500: Nova 00 • 162 Ambra 98-00
PIAGGIO 500: Quargo 05-17 • PK 500 03-10 • M 500 03-10 • AL 04-07
PIAGGIO 750: Quargo 04-06
PIAGGIO 1200: Porter 1.2 D 95-00
PIAGGIO 1400: Porter Van-Pick 98-05
(Codice Champion CH189)
R.O. 493061





246215085

KIT CAPPUCCIO CANDELA | *SPARK PLUG CAP KIT*
STOCK NUMBER: 8032
VB05F

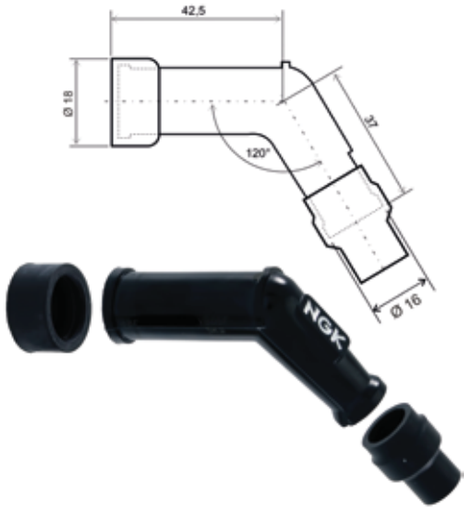

246215086

KIT CAPPUCCIO CANDELA | *SPARK PLUG CAP KIT*
STOCK NUMBER: 8022
SD05F



246215087

KIT CAPPUCCIO CANDELA | *SPARK PLUG CAP KIT*
STOCK NUMBER: 8072
XD05F



246215088

KIT CAPPUCCIO CANDELA | *SPARK PLUG CAP KIT*
STOCK NUMBER: 6667
L05EA

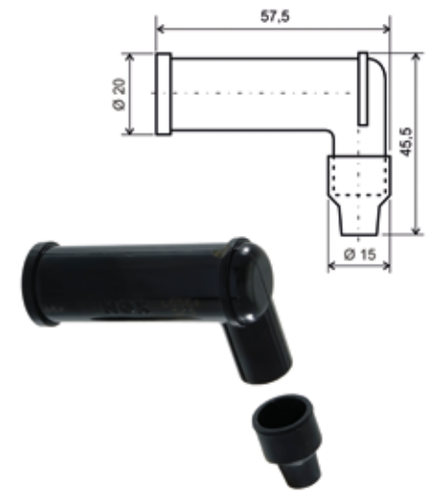

246215089

KIT CAPPUCCIO CANDELA | *SPARK PLUG CAP KIT*
STOCK NUMBER: 8060
LD05F

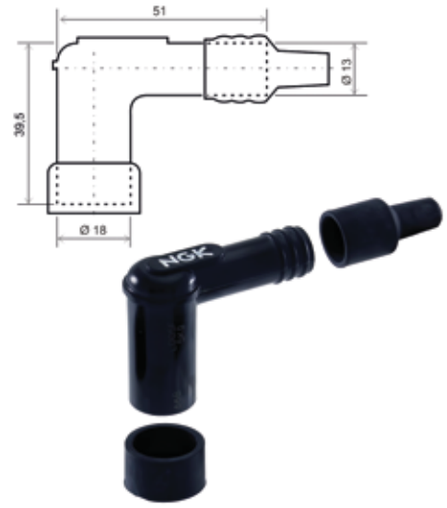

246215090

KIT CAPPUCCIO CANDELA | *SPARK PLUG CAP KIT*
STOCK NUMBER: 8080
SB05F

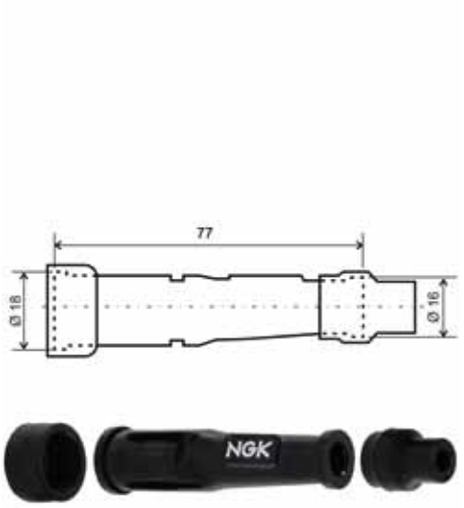



246216734

KIT CAPPUCCIO CANDELA | *SPARK PLUG CAP KIT*
STOCK NUMBER: 8955

TB05EM-R



246330010

KIT CAPPUCCIO CANDELA | *SPARK PLUG CAP KIT*
Innesto sulla candela Ø 6,3 mm | *Spark plug cap Ø 6,3 mm*
Confezione 10 pz. | *10 pcs pack*

MINARELLI 50: Applicazioni varie - *Various applications*



246330020

KIT CAPPUCCIO CANDELA | *SPARK PLUG CAP KIT*
Innesto sulla candela Ø 4 mm | *Spark plug cap Ø 4 mm*
Confezione 10 pz. | *10 pcs pack*

MINARELLI 50: Applicazioni varie - *Various applications*



246330030

KIT CAPPUCCIO CANDELA | *SPARK PLUG CAP KIT*
Confezione 10 pz. | *10 pcs pack*

FRANCO MORINI 50: Applicazioni varie - *Various applications*



246330040

KIT CAPPUCCIO CANDELA | *SPARK PLUG CAP KIT*
Confezione 10 pz. | *10 pcs pack*

APPLICAZIONI VARIE - ***VARIOUS APPLICATIONS***



246330090

KIT CAPPUCCIO CANDELA | *SPARK PLUG CAP KIT*
Confezione 10 pz. | *10 pcs pack*

APRILIA 50: SR • SR Ditech • SR R 00-12



121830230

CAPPUCCIO CANDELA | *SPARK PLUG CAP*
Confezione 5 pz. | *5 pcs pack*

PIAGGIO 50: Vespa L-N-R-S 63-84 • Vespa Super Sprint 65-71 • Vespa Special 69-83 • Vespa PK 82-84 • Vespa PK XL 85-89 • Vespa FL • Vespa FL2 HP
PIAGGIO 90: Vespa 63-84
PIAGGIO 125: Vespa 65-67 • Vespa Primavera ET3 67-83 • Vespa Cosa CL-CLX 88-91 • Vespa FL 89-90 • Vespa PK XL 86-89 • Vespa PX 98-07
(R.O. 244395 - 72843)



121830843

CAPPUCCIO CANDELA | *SPARK PLUG CAP*
Confezione 5 pz. | *5 pcs pack*

PIAGGIO 125: Vespa 55-65 • Vespa GT R 68-78 • Vespa Super 65-69 • Vespa Rally • Vespa PX 77-82 • Vespa PX 81-93
PIAGGIO 150: Vespa 55-65 • Vespa GS 55-63 • Vespa Sprint 65-74 • Vespa Sprint Veloce 69-79 • Vespa Super 65-79 • Vespa PX • Vespa PX
(R.O. 046741)



246330050

CAPPUCCIO CANDELA | *SPARK PLUG CAP*
Confezione 5 pz. | *5 pcs pack*

PIAGGIO 50: Ciao • Bravo • Boxer • Si
(R.O. 103936)





ACCESSORI CANDELE

SPARK PLUGS ACCESSORIES

246330060

CAPPUCCIO CANDELA | *SPARK PLUG CAP*
In gomma speciale nera | *Special black rubber*
Confezione 5 pz. | *5 pcs pack*

APPLICAZIONI VARIE - ***VARIOUS APPLICATIONS***



246330070

CAPPUCCIO CANDELA | *SPARK PLUG CAP*
In gomma al silicone | *Silicone rubber*
Confezione 5 pz. | *5 pcs pack*
Colore: rosso-blu | *Color: red-blue*

APPLICAZIONI VARIE - ***VARIOUS APPLICATIONS***



246330080

CAPPUCCIO CANDELA | *SPARK PLUG CAP*
In gomma al silicone | *Silicone rubber*
Confezione 5 pz. | *5 pcs pack*

APPLICAZIONI VARIE - ***VARIOUS APPLICATIONS***



246330100

CAPPUCCIO CANDELA | *SPARK PLUG CAP*
In gomma al silicone, schermato | *Sylicone rubber, with resistor*
Antiacqua | *Waterproof*
Innesto cavo Ø 7 mm | *Ø 7 mm cable connection*
Innesto candela Ø 6,2 mm | *Ø 6,2 mm spark plug connections*
Confezione 10 pz. | *10 pcs pack*

APPLICAZIONI VARIE - ***VARIOUS APPLICATIONS***



246330110

CAPPUCCIO CANDELA | *SPARK PLUG CAP*
In gomma al silicone, schermato | *Sylicone rubber, with resistor*
Antiacqua | *Waterproof*
Innesto cavo Ø 7 mm | *Ø 7 mm cable connection*
Innesto candela Ø 4 mm | *Ø 4 mm spark plug connections*
Ceramica candela Ø 10 | *Ø 10 spark plug ceramic*
Confezione 10 pz. | *10 pcs pack*

APPLICAZIONI VARIE - ***VARIOUS APPLICATIONS***



246330120

CAPPUCCIO CANDELA | *SPARK PLUG CAP*
In gomma al silicone - schermato | *Sylicone rubber, with resistor*
Antiacqua | *Waterproof*
Innesto cavo Ø 7 mm | *Ø 7 mm cable connection*
Innesto candela Ø 6,2 mm | *Ø 6,2 mm spark plug connections*
Ceramica candela Ø 12 | *Ø 12 spark plug ceramic*
Confezione 10 pz. | *10 pcs pack*

APPLICAZIONI VARIE - ***VARIOUS APPLICATIONS***



246330130

CAPPUCCIO CANDELA | *SPARK PLUG CAP*
In gomma al silicone - schermato | *Sylicone rubber, with resistor*
Antiacqua | *Waterproof*
Innesto cavo Ø 7 mm | *Ø 7 mm cable connection*
Innesto candela Ø 4 mm | *Ø 4 mm spark plug connections*
Ceramica candela Ø 12 | *Ø 12 spark plug ceramic*
Confezione 10 pz. | *10 pcs pack*

APPLICAZIONI VARIE - ***VARIOUS APPLICATIONS***



246330140

CHAMPION

CAPPUCCIO CANDELA | *SPARK PLUG CAP*
Piega 90° | *90° spark plug cap*
Innesto terminale SAE | *SAE connector*

PRO-0U



246330150

CHAMPION

CAPPUCCIO CANDELA | *SPARK PLUG CAP*
Piega 90° | *90° spark plug cap*
Schermata | *With resistor*
Innesto terminale 1 | *Connector type 1*

PRO-5M





246330160

CAPPUCCIO CANDELA | *SPARK PLUG CAP*
Piega 90° | *90° spark plug cap*
Schermata | *With resistor*
Innesto terminale SAE | *SAE connector*

PRO-5U



246330170

CAPPUCCIO CANDELA | *SPARK PLUG CAP*
Piega 180° | *180° spark plug cap*
Schermata | *With resistor*
Innesto terminale SAE | *SAE connector*

SRO-5U



246330350

CAPPUCCIO CANDELA | *SPARK PLUG CAP*
Confezione 10 pz. | *10 pcs pack*

WOA4/14H



121858472

CAPOCORDA CANDELA VESPA | *SPARK PLUG CLAMP*
Confezione 10 pz. | *10 pcs pack*

PIAGGIO: Applicazioni varie - *Various applications* Ape, Vespa
(R.O. 127966)



246490010

CAVO CANDELA | *SPARK PLUG CABLE*
Rotolo da 10 mt, Ø 7mm | *Packing 10/mtrs roll, Ø 7mm*

APPLICAZIONI VARIE - ***VARIOUS APPLICATIONS***



FANALI ANTERIORI - *FRONT LIGHTS*

246410030

In vetro, con portalampada | *Glass headlight with bulb socket*
Ø95mm

PIAGGIO 98: Vespa
PIAGGIO 125: Vespa Farobasso 48-51
R.O. 10172



246410040

In vetro, con portalampada | *Glass headlight with bulb socket*
Ø105mm

PIAGGIO 50: Vespa N • Vespa S • Vespa R •Vespa L
R.O. 101231



246410050

In vetro, con portalampada e ghiera | *Glass headlight with bulb socket and rim*
Ø115mm

PIAGGIO 150-160: Vespa GL • Vespa GS
R.O. 92326



246410060

In vetro, con portalampada | *Glass headlight with bulb socket*
Ø115mm

PIAGGIO 125: Vespa Primavera
PIAGGIO 150: Vespa Super 90
R.O. 144773



246410070

In vetro, con portalampada e ghiera | *Glass headlight with bulb socket and rim*
Ø130mm

PIAGGIO 125-150-180-200: Vespa Rally • Vespa Sprint Veloce • Vespa GTR
R.O. 144772



246410080

In vetro, con portalampada e ghiera | *Glass headlight with bulb socket and rim*

PIAGGIO 150: Vespa GL • Vespa Sprint
PIAGGIO 180: Vespa SS
R.O. 138508



246410090

In vetro, con portalampada | *Glass headlight with bulb socket*
Ø140mm

PIAGGIO 125-150-200: Vespa PX • Vespa PX Arcobaleno
R.O. 163685



246410100

Con portalampada | *With bulb socket*

PIAGGIO 50: Vespa Special • Vespa Elestart
V5A3T-VCB2T-V5B4T
R.O. 126695



246410110

In vetro, con portalampada (mercato Italiano) | *Glass headlight with bulb socket (for Italian market)*
Ø105mm

PIAGGIO 50: Vespa N • Vespa S • Vespa R • Vespa L
V5A1
R.O. 101321



246410120

H4 12V 60-55W - BA15s 12V 5W

PIAGGIO 125: Vespa Granturismo Eu3 03-07 • Vespa GTS Eu3 07-12
PIAGGIO 200: Vespa Granturismo 06-07
PIAGGIO 250: Vespa GTS 05-13 • Vespa GTS Abs 05-12
PIAGGIO 300: Vespa GTS ie Touring 11-12 • Vespa GTS ie 12-13
R.O. 58267R-584977



246410130

BA15s 12V 35-35W - BA15s 12V 5W

PIAGGIO 50: Vespa LX 2T 05-13 • Vespa LX 4T-4V Touring 10-13 • Vespa LX 4T-4V 09-13 • Vespa LX 4T 05-08
PIAGGIO 125: Vespa LX 4T FL 09
R.O. 58259R



246410140

H4 12V 60-55W - BA15s 12V 5W

PIAGGIO 125: Vespa LX 4T 3V ie Touring 12-13 • Vespa LX 4T Eu3 Touring 10-11 • Vespa LX 4T FL 09 • Vespa LX Eu3 ie 09-11 • Vespa LX Eu3 06-08 • Vespa LX 05-06
PIAGGIO 150: Vespa LX 4T 3V ie Touring 12-13 • Vespa LX 4T FL 09 • Vespa LX Eu3 ie 09-11 • Vespa LX Eu3 06-08 • Vespa LX Touring 10-12 • Vespa LX 05-06
R.O. 58260R



246410160

H4 12V 60-55W - BA15s 12V 5W

PIAGGIO 125: Vespa GTS 4T ie Super 09-13
PIAGGIO 300: Vespa GTS Super 08-13
R.O. 58265R



246410170

In vetro, con portalampada | *Glass made, with holder*
Ø105mm

PIAGGIO 150: Vespa 55-56
VL2T
R.O. 025483



246410180

In vetro, con portalampada | *Glass made, with holder*
Ø105mm

PIAGGIO 150: Vespa 55-56
VL2T
R.O. 025483



246410190

In vetro, con portalampada | *Glass made, with holder*
Ø105mm

PIAGGIO 125: Vespa 58-61
VNA1T-VNA2T-VNB1T-VNB2T
R.O. 087310



246410200

In vetro, con portalampada | *Glass made, with holder*
Ø105mm

PIAGGIO 125: Vespa 53-54
VM1T-VM2T
R.O. 018087



246410210

In vetro, con portalampada | *Glass made, with holder*
Ø115mm

PIAGGIO 150: Vespa GS 56
VS1T
R.O. 025793



246410220

In vetro, con portalampada | *Glass made, with holder*
Ø115mm

PIAGGIO 150: Vespa GS 56
VS1T
R.O. 025793



246410230

In vetro, con portalampada | *Glass made, with holder*
Ø105mm

PIAGGIO 125: Vespa 55-56
VN1T-VN2T
R.O. 026008



246410240

In vetro, con portalampada | *Glass made, with holder*
Ø105mm

PIAGGIO 150: Vespa Struzzo 54-57
VL1
R.O. 23447



246410310 NEW

In plastica | *Plastic made*
Ø140mm

PIAGGIO 125-150-200: Vespa PX
R.O. 582946



246410270

PIAGGIO 50: Ciao >71
R.O. 152860



246410290

Con Commutatore Luci | *With Light Switch*

PIAGGIO 50: Ciao Euro 1
R.O. 188143-581276



FANALI ANTERIORI SUPPLEMENTARI - *ADDITIONAL HEADLIGHTS*

246510755

Fanale supplementare LED, impermeabile con kit di installazione | *Additional LED highlight waterproof, with brackets*
10W, 720 Lumen, 6500K
APPLICAZIONI VARIE



FANALI POSTERIORI - *REAR LIGHTS*

246420010

Con guarnizione | *With gasket*
PIAGGIO 90: Vespa 90 • Vespa Sprint
PIAGGIO 125: Vespa Primavera 63-66 • Vespa Sprint
R.O. 078641



246420020

Con guarnizione | *With gasket*
PIAGGIO 50: Vespa 63-67
R.O. 78872



246420030

Con guarnizione | *With gasket*
PIAGGIO 125: Vespa 60-64
PIAGGIO 150: Vespa GS 59-64 • Vespa GL 59-64 • Vespa 150 59-65
R.O. 089442



246420040

Con guarnizione | *With gasket*

PIAGGIO 125-150: Vespa 125 >65 • Vespa Sprint 64-66 • Vespa Super >66 • Vespa GL
PIAGGIO 180: Vespa SS <65
R.O. 091488



246420050

Con guarnizione | *With gasket*

PIAGGIO 125-150: Vespa Super >66 • Vespa Sprint 65-74
PIAGGIO 180: Vespa SS 65-68
R.O. 091419



246420060

Con guarnizione | *With gasket*

PIAGGIO 50: Vespa 50 Special >72
R.O. 143687



246420070

Con guarnizione | *With gasket*

PIAGGIO 125-150: Vespa 125-150 58 • Vespa GS 58 VN1-VN2-VNA1-VNA2-VL1-VL2-VL3-VB1-VS1-VS2-VS3
R.O. 021098



246420080

Con guarnizione | *With gasket*

PIAGGIO 125: Vespa 53 • Vespa U 53
R.O. 0184270001



246420090

Con guarnizione | *With gasket*

PIAGGIO 125: Vespa 51-53 • Vespa 58-59
R.O. 014936



246420140

Con guarnizione | *With gasket*

PIAGGIO: Vespa vari modelli fino a 66-67 - *Various Vespa models till 66-67*
R.O. 102459



246420150

Con guarnizione | *With gasket*

PIAGGIO 125-150-200: Vespa PX 77-82 • Vespa PXE 77-82
R.O. 162740



246420160

Con guarnizione | *With gasket*

PIAGGIO 125-150-200: Vespa PXE (Freno a disco - *Brake disc model*) 98-01 • Vespa PXE 98-01
R.O. 583081



246420170

Con guarnizione | *With gasket*

PIAGGIO 125-150-180-200: Vespa GTR 69-78 • Vespa Sprint Veloce 69-79 • Vespa Rally 68-79
R.O. 121017



246420180

Con guarnizione | *With gasket*

PIAGGIO 125: Vespa ET3 76-83 • Vespa Primavera 67-83
R.O. 159430



246420200

Senza guarnizione | *Without gasket*

PIAGGIO 150: Vespa GS 58



246420210

Con guarnizione | *With gasket*

PIAGGIO 125: Vespa PX T5 85 • Vespa PX T5 Elestart 86
R.O. 232774



246480380

COPPIA FRECCE LED "DEMON" SILVER
Alluminio Die Casting | *Alloy Die Casting*
Luce Led | *Led light*
Corpo Silver | *Silver colour*
2 Pezzi | *2 pcs*

TRASPARENTE E-MARK LUCE LED



246480381

FRECCIA LED "DEMON" SILVER
Alluminio Die Casting | *Alloy Die Casting*
Luce Led | *Led light*
Corpo Silver | *Silver colour*
1 Pezzo | *1 pc*

TRASPARENTE E-MARK



246480390

COPPIA FRECCE LED "YAMATO" SILVER
Alluminio Die Casting | *Alloy Die Casting*
Luce Led | *Led light*
Corpo Silver | *Silver colour*
2 Pezzi | *2 pcs*

TRASPARENTE E-MARK LUCE LED



246480391

FRECCIA LED "YAMATO" SILVER
Alluminio Die Casting | *Alloy Die Casting*
Luce Led | *Led light*
Corpo Silver | *Silver colour*
1 Pezzo | *1 pc*

TRASPARENTE E-MARK



246480486

COPPIA FRECCE LED BILUCE ANTERIORE | *LED INDICATORS + DAYLIGHT COUPLE*
Adatte solo per anteriore | *Just for front use*
Luci di posizione anteriori incorporate | *With daylight*
Luce led | *Led light*
Corpo nero | *Black colour*

E-MARK LUCE LED



246480487

COPPIA FRECCE LED BILUCE POSTERIORE | *LED INDICATORS + TAIL LIGHT AND STOP COUPLE*
Adatte solo per posteriore | *Just for rear use*
Luci di posizione posteriori e stop incorporate | *With rear light and stop light*
Luce led | *Led light*
Corpo nero | *Black colour*

E-MARK LUCE LED





246480488

COPPIA FRECCE LED | *LED INDICATORS COUPLE*
Luce led | *Led light*
Corpo nero | *Black colour*

E-MARK LUCE LED



246480492

COPPIA FRECCE LED BILUCE POSTERIORE | *LED INDICATORS + TAIL LIGHT AND STOP COUPLE*
Adatte solo per posteriore | *Just for rear use*
Luci di posizione posteriori e stop incorporate | *With rear light and stop light*
Luce led | *Led light*
Corpo nero | *Black colour*

E-MARK LUCE LED



246480493

COPPIA FRECCE LED | *LED INDICATORS COUPLE*
Luce led | *Led light*
Corpo nero | *Black colour*

E-MARK LUCE LED



246480491

COPPIA FRECCE LED BILUCE ANTERIORE | *LED INDICATORS + DAYLIGHT COUPLE*
Adatte solo per anteriore | *Just for front use*
Luci di posizione anteriori incorporate | *With daylight*
Luce led | *Led light*
Corpo nero | *Black colour*

E-MARK LUCE LED



246480489

COPPIA FRECCE LED | *LED INDICATORS COUPLE*
Luce led | *Led light*
Corpo nero | *Black colour*

E-MARK LUCE LED



246480275

COPPIA FANALINI FRECCIA LED | *LED INDICATORS COUPLE*
Luce Led | *Led light*
Corpo Nero | *Black colour*
Coppia resistenze: 3W-27 Ω | *Resistor couple: 3W-27 Ω*

TRASPARENTE E-MARK



246480280

COPPIA FANALINI FRECCIA | *INDICATORS COUPLE*
Corpo Nero | *Black colour*
Lampada 12 V - 21W | *Bulb 12 V - 21W*

ARANCIO E-MARK



246480211

COPPIA FANALINI FRECCIA LED | *LED INDICATORS COUPLE*
Luce Led | *Led light*
Corpo Nero | *Black colour*
Coppia resistenze: 5W-31 Ω | *Resistor couple:5W-31 Ω*

TRASPARENTE E-MARK



246480228

COPPIA FANALINI FRECCIA LED | *LED INDICATORS COUPLE*
Luce Led | *Led light*
Corpo Carbon | *Carbon colour*
Coppia resistenze: 5W-31 Ω | *Resistor couple:5W-31 Ω*

TRASPARENTE E-MARK LUCE LED



246480208

COPPIA FANALINI FRECCIA LED | *LED INDICATORS COUPLE*
Luce Led | *Led light*
Corpo Carbon | *Carbon colour*
Coppia resistenze: 5W-31 Ω | *Resistor couple:5W-31 Ω*

TRASPARENTE E-MARK



246480155

COPPIA FANALINI FRECCIA LED | *LED INDICATORS COUPLE*
Luce Led | *Led light*
Corpo Nero | *Black colour*
Coppia resistenze: 5W-31 Ω | *Resistor couple:5W-31 Ω*

TRASPARENTE E-MARK LUCE LED



246480160

COPPIA FANALINI FRECCIA SLIM | *LED INDICATORS COUPLE*
Luce Led | *Led light*
Lente trasparente ovale ad incasso | *Recessed oval clear lens*
Corpo Carbon | *Carbon colour*
Packaging in blister | *Blister packaging*
Coppia resistenze: 5W-31 Ω | *Resistor couple: 5W-31 Ω*

TRASPARENTE E-MARK





246480170

COPPIA FANALINI FRECCIA TRIANGOLARI | *TRIANGULAR INDICATORS COUPLE*
Luce Led | *Led light*
Braccio lungo ammortizzato | *Long arm suspension*
Lente esterna trasparente ad incasso | *Recessed clear outer lens*
Corpo Carbon | *Carbon colour*
Packaging in blister | *Blister packaging*
Coppia resistenze: 5W-31 Ω | *Resistor couple: 5W-31 Ω*

TRASPARENTE E-MARK LUCE LED



246480140

COPPIA FANALINI FRECCIA TRIANGOLARI | *TRIANGULAR INDICATORS COUPLE*
Braccio lungo ammortizzato | *Long arm suspension*
Corpo Carbon | *Carbon colour*
Lente esterna trasparente | *Recessed clear lens*
Lente interna arancio | *Orange internal lens*
Lampada 12 V - 21W | *Bulb 12 V - 21W*
Packaging in blister | *Blister packaging*

TRASPARENTE E-MARK



246480020

COPPIA FANALINI FRECCIA | *INDICATORS COUPLE*
Lente triangolare ad incasso | *Recessed triangular lens*
Braccio corto ammortizzato | *Short arm suspension*
Corpo Carbon | *Carbon colour*
Lente esterna trasparente | *Recessed clear lens*
Lente interna arancio | *Orange internal lens*
Lampada 12 V - 21W | *Bulb 12 V - 21W*
Packaging in blister | *Blister packaging*

TRASPARENTE E-MARK CARBON LOOK



246480060

COPPIA FANALINI FRECCIA | *INDICATORS COUPLE*
Lente ovale fissaggio a vite | *Screw fixing oval lens*
Braccio corto | *Short arm*
Corpo Carbon | *Carbon colour*
Lente esterna trasparente | *Recessed clear lens*
Lente interna arancio | *Orange internal lens*
Lampada 12 V - 21W | *Bulb 12 V - 21W*
Packaging in blister | *Blister packaging*

TRASPARENTE E-MARK



246480070

COPPIA FANALINI FRECCIA SLIM | *INDICATORS COUPLE*
Lente arancio ovale ad incasso | *Recessed orange oval lens*
Corpo Carbon | *Carbon colour*
Packaging in blister | *Blister packaging*

ARANCIO CARBON LOOK NON OMOLOGATO



246480080

COPPIA FANALINI FRECCIA SLIM | *INDICATORS COUPLE*
Lente trasparente ovale ad incasso | *Recessed clear oval lens*
Corpo Carbon | *Carbon colour*

TRASPARENTE CARBON LOOK





246480130

COPPIA FANALINI FRECCIA TRIANGOLARI | *TRIANGULAR INDICATORS COUPLE*
Braccio lungo ammortizzato | *Long arm suspension*
Corpo Nero | *Black colour*
Lente esterna trasparente | *Clear outer lens*
Lente interna arancio | *Orange internal lens*
Lampada 12 V - 21W | *Bulb 12 V - 21W*
Packaging in blister | *Blister packaging*

E-MARK



246480090

COPPIA FANALINI FRECCIA TRIANGOLARI | *TRIANGULAR INDICATORS COUPLE*
Braccio corto ammortizzato | *Short arm suspension*
Corpo Nero | *Black colour*
Lente esterna trasparente | *Clear outer lens*
Lente interna arancio | *Orange internal lens*
Lampada 12 V - 21W | *Bulb 12 V - 21W*
Packaging in blister | *Blister packaging*

E-MARK



246480110

COPPIA FANALINI FRECCIA OVALI | *OVAL INDICATORS COUPLE*
Braccio corto ammortizzato | *Short arm suspension*
Corpo Nero | *Black colour*
Lente esterna trasparente | *Clear outer lens*
Lente interna arancio | *Orange internal lens*
Lampada 12 V - 21W | *Bulb 12 V - 21W*
Packaging in blister | *Blister packaging*

E-MARK



246480120

COPPIA FANALINI FRECCIA OVALI | *OVAL INDICATORS COUPLE*
Braccio corto ammortizzato | *Short arm suspension*
Corpo cromato | *Chrome colour*
Lente esterna trasparente | *Clear outer lens*
Lente interna arancio | *Orange internal lens*
Lampada 12 V - 21W | *Bulb 12 V - 21W*
Packaging in blister | *Blister packaging*

E-MARK



246480255

FANALE FRECCIA ANTERIORE DESTRO (Lente trasparente) | *FRONT INDICATOR RIGHT (Clear lens)*

YAMAHA 500: T-Max 01/07



246480265

FANALE FRECCIA ANTERIORE SINISTRO (Lente trasparente) | *FRONT INDICATOR LEFT (Clear lens)*

YAMAHA 500: T-Max 01/07



246480400

FRECCIA ANTERIORE DESTRA (Lente arancione) | *FRONT INDICATOR RIGHT (Orange lens)*

PIAGGIO 125-150-200: Vespa PX • PX T5 • PX Arcobaleno R.O. 163256



246480410

FRECCIA ANTERIORE SINISTRA (Lente arancione) | *FRONT INDICATOR LEFT (Orange lens)*

PIAGGIO 125-150-200: Vespa PX • PX T5 • PX Arcobaleno
R.O. 162817



246480420

FRECCIA POSTERIORE DESTRA (Lente arancione) | *REAR INDICATOR RIGHT (Orange lens)*

PIAGGIO 125-150-200: Vespa PX • PX T5 • PX Arcobaleno
R.O. 230339



246480430

FRECCIA POSTERIORE SINISTRA (Lente arancione) | *REAR INDICATOR LEFT (Orange lens)*

PIAGGIO 125-150-200: Vespa PX • PX T5 • PX Arcobaleno
R.O. 230338



246480415

FRECCIA ANTERIORE SINISTRA (Lente bianca) | *FRONT INDICATOR LEFT (White lens)*

PIAGGIO 125-150-200: Vespa PX • Vespa PXE • Vespa T5 VNX-VLX1-VSX-VNX5T-VNX2-VLX2-VSX2
R.O. 583082



246480405

FRECCIA ANTERIORE DESTRA (Lente bianca) | *FRONT INDICATOR RIGHT (White lens)*

PIAGGIO 125-150-200: Vespa PX • Vespa PXE • Vespa T5 VNX-VLX1-VSX-VNX5T-VNX2-VLX2-VSX2
R.O. 583083



246480435

FRECCIA POSTERIORE SINISTRA (Lente bianca) | *REAR INDICATOR LEFT (White lens)*

PIAGGIO 125-150-200: Vespa PX • Vespa PXE • Vespa T5 VNX-VLX1-VSX-VNX5T-VNX2-VLX2-VSX2
R.O. 583084



246480425

FRECCIA POSTERIORE DESTRA (Lente bianca) | *REAR INDICATOR RIGHT (White lens)*

PIAGGIO 125-150-200: Vespa PX • Vespa PXE • Vespa T5 VNX-VLX1-VSX-VNX5T-VNX2-VLX2-VSX2
R.O. 583085



246480460

FRECCIA ANTERIORE DESTRA (Lente arancione) (Cromata) | *FRONT INDICATOR RIGHT (Orange lens) (Chromed)*

PIAGGIO 125-150-200: Vespa PX • Vespa PXE • Vespa T5 VNX-VLX1-VSX-VNX5T-VNX2-VLX2-VSX2



246480450

FRECCIA ANTERIORE SINISTRA (Lente arancione) (Cromata) | *FRONT INDICATOR LEFT (Orange lens) (Chromed)*

PIAGGIO 125-150-200: Vespa PX • Vespa PXE • Vespa T5 VNX-VLX1-VSX-VNX5T-VNX2-VLX2-VSX2





246480480

FRECCIA POSTERIORE DESTRA (Lente arancione) | *REAR INDICATOR RIGHT (Orange lens)*

PIAGGIO 125-150-200: Vespa PX • Vespa PXE • Vespa T5 VNX-VLX1-VSX-VNX5T-VNX2-VLX2-VSX2



246480470

FRECCIA POSTERIORE SINISTRA (Lente arancione) (Cromata) | *REAR INDICATOR LEFT (Orange lens) (Chromed)*

PIAGGIO 125-150-200: Vespa PX • Vespa PXE • Vespa T5 VNX-VLX1-VSX-VNX5T-VNX2-VLX2-VSX2



246480465

FRECCIA ANTERIORE DESTRA (Lente Bianca) (Cromata) | *FRONT INDICATOR RIGHT (White lens) (Chromed)*

PIAGGIO 125-150-200: Vespa PX • Vespa PXE • Vespa T5 VNX-VLX1-VSX-VNX5T-VNX2-VLX2-VSX2
R.O. 638762



246480455

FRECCIA ANTERIORE SINISTRA (Lente Bianca) (Cromata) | *FRONT INDICATOR LEFT (White lens) (Chromed)*

PIAGGIO 125-150-200: Vespa PX • Vespa PXE • Vespa T5 VNX-VLX1-VSX-VNX5T-VNX2-VLX2-VSX2
R.O. 638761



246480485

FRECCIA POSTERIORE DESTRA (Lente Bianca) (Cromata) | *REAR INDICATOR RIGHT (White lens) (Chromed)*

PIAGGIO 125-150-200: Vespa PX • Vespa PXE • Vespa T5 VNX-VLX1-VSX-VNX5T-VNX2-VLX2-VSX2
R.O. 638764



246480475

FRECCIA POSTERIORE SINISTRA (Lente Bianca) (Cromata) | *REAR INDICATOR LEFT (White lens) (Chromed)*

PIAGGIO 125-150-200: Vespa PX • Vespa PXE • Vespa T5 VNX-VLX1-VSX-VNX5T-VNX2-VLX2-VSX2
R.O. 638763



246480498

FRECCIA ANTERIORE SINISTRA | *FRONT INDICATOR LEFT*

PIAGGIO 50: Ape TM
R.O. 233793



246480499

FRECCIA ANTERIORE DESTRA | *FRONT INDICATOR RIGHT*

PIAGGIO 50: Ape TM
R.O. 233794



246480500

FRECCIA ANTERIORE DESTRA | *FRONT INDICATOR RIGHT*

PIAGGIO 220: Ape MP
R.O. 163090





246480501

FRECCIA ANTERIORE SINISTRA | *FRONT INDICATOR LEFT*

PIAGGIO 220: Ape MP
R.O. 163089





LENTI FRECCIA

BLINKERS LENSES

246470010 E-MARK ARANCIO

246470015 TRASPARENTE

ANTERIORE SINISTRA | *LEFT FRONT*

APRILIA 50: SR Stealth Racing 97-99
APRILIA 125-150: SR 99-01 • Leonardo 96-98
R.O. AP8124544



246470020 E-MARK ARANCIO

246470025 TRASPARENTE

ANTERIORE DESTRA | *RIGHT FRONT*

APRILIA 50: SR Stealth Racing 97-99
APRILIA 125-150: SR 99-01 • Leonardo 96-98
R.O. AP8124543



246470030 E-MARK ARANCIO

246470035 TRASPARENTE

ANTERIORE DESTRA - SINISTRA | *RIGHT - LEFT FRONT*
POSTERIORE DESTRA - SINISTRA | *RIGHT - LEFT REAR*

APRILIA 50: Rally Liquid Cooled 96-99 • RS 99-05 • Scarabeo street 05-06 • Scarabeo 93-05
APRILIA 100: Scarabeo Motore Minarelli 00 • Scarabeo Motore Yamaha 00
APRILIA 125: RS 99-05 • SR 99-01 • Classic 95-99
APRILIA 250: RS 95-03
APRILIA 1000: RSV SP 99-00 • RSV-R 00 • RSV 98-99
R.O. AP8212680



246470040 E-MARK ARANCIO

246470045 TRASPARENTE

246470055 TRASPARENTE

ANTERIORE DESTRA - SINISTRA | *RIGHT - LEFT FRONT*

MALAGUTI 50: F12 Phantom 94-00 • F12 Restyling 01-06
MALAGUTI **100:** F12 Phantom 99-00
R.O. 01903900



246470060 E-MARK ARANCIO

246470065 TRASPARENTE

ANTERIORE SINISTRA | *LEFT FRONT*

GILERA 50: Storm 94-95 • Typhoon X-XR 94-00
GILERA 125: Typhoon X-XR 95-00
PIAGGIO 50: NTT 95-96 • NRG 94-96 • NRG RST MC2 96-98 • Typhoon 01-04 • Zip Fast Rider RST 96-97 • Zip SP 96-00
R.O. 498435



246470070 E-MARK ARANCIO

246470075 TRASPARENTE

ANTERIORE DESTRA | *RIGHT FRONT*

GILERA 50: Storm 94-95 • Typhoon X-XR 94-00
GILERA 125: Typhoon X-XR 95-00
PIAGGIO 50: NTT 95-96 • NRG 94-96 • NRG RST MC2 96-98 • Typhoon 01-04 • Zip Fast Rider RST 96-97 • Zip SP 96-00
R.O. 498436





246470080 E-MARK ARANCIO

246470085 TRASPARENTE

POSTERIORE SINISTRA | *LEFT REAR*

GILERA 50: Storm 94-95 • Typhoon X-XR 94-00
GILERA 125: Typhoon X-XR 95-00
PIAGGIO 50: NTT 95-96 • NRG 94-96 • NRG RST MC2 96-98 • Typhoon 01-04 • Zip Fast Rider RST 96-97 • Zip SP 96-00
R.O. 498437



246470090 E-MARK ARANCIO

246470095 TRASPARENTE

POSTERIORE DESTRA | *RIGHT REAR*

GILERA 50: Storm 94-95 • Typhoon X-XR 94-00
GILERA 125: Typhoon X-XR 95-00
PIAGGIO 50: NTT 95-96 • NRG 94-96 • NRG RST MC2 96-98 • Typhoon 01-04 • Zip Fast Rider RST 96-97 • Zip SP 96-00
R.O. 498438



246470100 E-MARK ARANCIO

246470101 ARANCIO

246470105 TRASPARENTE

ANTERIORE SINISTRA | *LEFT FRONT*

PIAGGIO 50: Liberty 97-05 • Liberty 4T 00-02
PIAGGIO 125: Liberty 98-02
R.O. 580100



246470110 E-MARK ARANCIO

246470115 TRASPARENTE

ANTERIORE DESTRA | *RIGHT FRONT*

PIAGGIO 50: Liberty 97-05 • Liberty 4T 00-02
PIAGGIO 125: Liberty 98-02
R.O. 580101



246470120 E-MARK ARANCIO

246470125 TRASPARENTE

POSTERIORE SINISTRA | *LEFT REAR*

PIAGGIO 50: Liberty 97-05 • Liberty 4T 00-02
PIAGGIO 125: Liberty 98-02
R.O. 580102



246470130 E-MARK ARANCIO

246470135 TRASPARENTE

POSTERIORE DESTRA | *RIGHT REAR*

PIAGGIO 50: Liberty 97-05 • Liberty 4T 00-02
PIAGGIO 125: Liberty 98-02
R.O. 580103





LENTI FRECCIA

BLINKERS LENSES

246470310	E-MARK	ARANCIO	
246470311		ARANCIO	
246470315		TRASPARENTE	

POSTERIORE SINISTRA | *LEFT REAR*

PIAGGIO 50: NRG RST MC2 96-98 • NRG Extreme 99-00 • NRG MC3 01-02 • NRG Purejet 02-04
R.O. 294689



246470320	E-MARK	ARANCIO	
246470321		ARANCIO	
246470325		TRASPARENTE	

POSTERIORE DESTRA | *RIGHT REAR*

PIAGGIO 50: NRG RST MC2 96-98 • NRG Extreme 99-00 • NRG MC3 01-02 • NRG Purejet 02-04
R.O. 294690



246470145	TRASPARENTE	

ANTERIORE SINISTRA | *LEFT FRONT*

APRILIA 50: SR Ditech 00-04 • SR Street 03-12
APRILIA 125-250: Leonardo 99-04
R.O. AP8224210



246470155	TRASPARENTE	

ANTERIORE DESTRA | *RIGHT FRONT*

APRILIA 50: SR Ditech 00-04 • SR Street 03-12
APRILIA 125-250: Leonardo 99-04
R.O. AP8224213



246470180	E-MARK	ARANCIO	

ANTERIORE SINISTRA | *LEFT FRONT*
POSTERIORE DESTRA | *RIGHT REAR*

MBK 50: Booster 90-94 • Booster Road 94-95 • Booster 01-03 • Booster Spirit 96-03 • Stunt 00-02
YAMAHA 50: Bw'S Original 97-02 • Bw'S Original Eu2 02-03 • Bw'S R 01 • CWL Bw's 03 • Slider 00-02
R.O. 3VLH33120000



246470190	E-MARK	ARANCIO	
246470191		ARANCIO	
246470195		TRASPARENTE	

POSTERIORE SINISTRA | *LEFT REAR*

MBK 50: Booster 01-03 • Booster Spirit 99-03 • Booster Naked 03
YAMAHA 50: Bw'S 01-03 • Bw'S Original 99-02 • Bw'S Naked 03
R.O. 4VUH33320000





246470200	E-MARK	ARANCIO
246470201		ARANCIO
246470205		TRASPARENTE

POSTERIORE DESTRA | *RIGHT REAR*

MBK 50: Booster 01-03 • Booster Spirit 99-03 • Booster Naked 03
YAMAHA 50: Bw'S 01-03 • Bw'S Original 99-02 • Bw'S Naked 03
R.O. 4VUH33320000



246470210	E-MARK	ARANCIO
246470215		TRASPARENTE

ANTERIORE SINISTRA | *LEFT FRONT*

MBK 50: Booster NG 99-06
YAMAHA 50: Bw'S Ng 99-06
R.O. 5FXH33120000



246470220	E-MARK	ARANCIO
246470221		ARANCIO
246470225		TRASPARENTE

ANTERIORE DESTRA | *RIGHT FRONT*

MBK 50: Booster NG 99-06
YAMAHA 50: Bw'S Ng 99-06
R.O. 5FXH33220000



246470230	E-MARK	ARANCIO
246470231		ARANCIO
246470235		TRASPARENTE

POSTERIORE SINISTRA | *LEFT REAR*

MBK 50: Booster NG 95-03 • Booster NG Eu1 99-00 • Booster Track 96-98 • Booster Rocket 97-98
YAMAHA 50: Bw's NG 97-05 • Bw'S NG Cat 99-00 • Bw'S Bump 97-98 • Spy 95-98
R.O. 4SBH33320000



246470240	E-MARK	ARANCIO
246470241		ARANCIO

POSTERIORE DESTRA | *RIGHT REAR*

MBK 50: Booster NG 95-03
YAMAHA 50: Bw'S NG 95-03 • Spy 95-98
R.O. 4SBH33420000



246470245		TRASPARENTE
246470250	E-MARK	ARANCIO

ANTERIORE SINISTRA | *LEFT FRONT*

MBK 50: Nitro 99-04 • Nitro Jaguar 02-04
MBK 100: Nitro 00-02
YAMAHA 50: Aerox 99-12
YAMAHA 100: Aerox 00-02
R.O. 5BRH33121000





LENTI FRECCIA

BLINKERS LENSES

246470255		TRASPARENTE
246470260	E-MARK	ARANCIO

ANTERIORE DESTRA | *RIGHT FRONT*

MBK 50: Nitro 99-04 • Nitro Jaguar 02-04
MBK 100: Nitro 00-02
YAMAHA 50: Aerox 99-12
YAMAHA 100: Aerox 00-02
R.O. 5BRH33221000



246470265		TRASPARENTE
246470270	E-MARK	ARANCIO

POSTERIORE SINISTRA | *LEFT REAR*

MBK 50: Nitro 99-04 • Nitro Jaguar 02-04
MBK 100: Nitro 00-02
YAMAHA 50: Aerox 99-12
YAMAHA 100: Aerox 00-02
R.O. 5HEH33320000



246470275		TRASPARENTE
246470280	E-MARK	ARANCIO
246470281		ARANCIO
246470285		TRASPARENTE

POSTERIORE DESTRA | *RIGHT REAR*

MBK 50: Nitro 99-04 • Nitro Jaguar 02-04
MBK 100: Nitro 00-02
YAMAHA 50: Aerox 99-12
YAMAHA 100: Aerox 00-02
R.O. 5HEH33420000



246470290	E-MARK	ARANCIO
246470291		ARANCIO
246470295		TRASPARENTE

ANTERIORE SINISTRA | *LEFT FRONT*

PIAGGIO 50: NRG Extreme 99-00 • NRG MC3 01-02 • NRG Purejet 02-04
R.O. 581290



246470300	E-MARK	ARANCIO
246470301		ARANCIO
246470305		TRASPARENTE

ANTERIORE DESTRA | *RIGHT FRONT*

PIAGGIO 50: NRG Extreme 99-00 • NRG MC3 01-02 • NRG Purejet 02-04
R.O. 581289



246470335		TRASPARENTE

POSTERIORE SINISTRA | *LEFT REAR*

YAMAHA 500: T-Max 01-07
R.O. 5GJ833320000





246470345 TRASPARENTE



POSTERIORE DESTRA | *RIGHT REAR*

YAMAHA 500: T-Max 01-07
R.O. 5GJ833420000

246470360 TRASPARENTE



ANTERIORE SINISTRA | *LEFT FRONT*

LML 125-150-200: Star • Star Automatica • Star Deluxe • CVT
R.O. SF284-0180/1
PIAGGIO 125: Vespa PX • Vespa PXE • Vespa PX Arcobaleno • Vespa T5
PIAGGIO 150: Vespa PX • Vespa PXE • Vespa PX Arcobaleno
PIAGGIO 200: Vespa PXE • Vespa PX Arcobaleno
R.O. 1968960001

246470370 TRASPARENTE



ANTERIORE DESTRA | *RIGHT FRONT*

LML 125-150-200: Star • Star Automatica • Star Deluxe • CVT
R.O. SF284-0181/1
PIAGGIO 125: Vespa PX • Vespa PXE • Vespa PX Arcobaleno • Vespa T5
PIAGGIO 150: Vespa PX • Vespa PXE • Vespa PX Arcobaleno
PIAGGIO 200: Vespa PXE • Vespa PX Arcobaleno
R.O. 1968970001

246470380 TRASPARENTE



POSTERIORE SINISTRA | *LEFT REAR*

LML 125-150-200: Star • Star Automatica • Star Deluxe • CVT
R.O. SF284-0182/1
PIAGGIO 125: Vespa PX • Vespa PXE • Vespa PX Arcobaleno • Vespa T5
PIAGGIO 150: Vespa PX • Vespa PXE • Vespa PX Arcobaleno
PIAGGIO 200: Vespa PXE • Vespa PX Arcobaleno
R.O. 1968980001

246470390 TRASPARENTE



POSTERIORE DESTRA | *LEFT REAR*

LML 125-150-200: Star • Star Automatica • Star Deluxe • CVT
R.O. SF284-0183/1
PIAGGIO 125: Vespa PX • Vespa PXE • Vespa PX Arcobaleno • Vespa T5
PIAGGIO 150: Vespa PX • Vespa PXE • Vespa PX Arcobaleno
PIAGGIO 200: Vespa PXE • Vespa PX Arcobaleno
R.O. 1968990001

246470365 ARANCIO



ANTERIORE SINISTRA | *LEFT FRONT*

PIAGGIO 125: Vespa PX • Vespa PXE • Vespa PX Arcobaleno • Vespa T5
PIAGGIO 150: Vespa PX • Vespa PXE • Vespa PX Arcobaleno
PIAGGIO 200: Vespa PXE • Vespa PX Arcobaleno
R.O. 185976 - 162817

246470375 ARANCIO



ANTERIORE DESTRA | *RIGHT FRONT*

PIAGGIO 125: Vespa PX • Vespa PXE • Vespa PX Arcobaleno • Vespa T5
PIAGGIO 150: Vespa PX • Vespa PXE • Vespa PX Arcobaleno
PIAGGIO 200: Vespa PXE • Vespa PX Arcobaleno
R.O. 185977 - 163256

246470385 ARANCIO



POSTERIORE SINISTRA | *LEFT REAR*

PIAGGIO 125: Vespa PX • Vespa PXE • Vespa PX Arcobaleno • Vespa T5
PIAGGIO 150: Vespa PX • Vespa PXE • Vespa PX Arcobaleno
PIAGGIO 200: Vespa PXE • Vespa PX Arcobaleno
R.O. 185978 - 230338



LENTI FRECCIA

BLINKERS LENSES

246470395 ARANCIO



POSTERIORE DESTRA | *LEFT REAR*

PIAGGIO 125: Vespa PX • Vespa PXE • Vespa PX Arcobaleno • Vespa T5
PIAGGIO 150: Vespa PX • Vespa PXE • Vespa PX Arcobaleno
PIAGGIO 200: Vespa PXE • Vespa PX Arcobaleno
R.O. 185979 - 230339

246470526 ARANCIO



ANTERIORE DESTRA | *FRONT RIGHT*

PIAGGIO 50: Ape TM P
R.O. 196338

246470536 ARANCIO



ANTERIORE SINISTRA | *FRONT LEFT*

PIAGGIO 50: Ape TM P
R.O. 215059

246470546 ARANCIO



ANTERIORE DESTRA | *FRONT RIGHT*

PIAGGIO 220: Ape MP
R.O. 180004

246470556 ARANCIO



ANTERIORE SINISTRA | *FRONT LEFT*

PIAGGIO 220: Ape MP
R.O. 180021



246470355

TRASPARENTE

LENTE FANALE POSTERIORE | *REAR LENS*

YAMAHA 500: T-Max 01-07



246470406

ROSSO

LENTE FANALE POSTERIORE | *REAR LENS*

PIAGGIO 90: Vespa 63-66 • Vespa Sprint 63-66
PIAGGIO 125: Vespa 63-66 • Vespa Primavera 63-66
R.O. 78627



246470416

ROSSO

LENTE FANALE POSTERIORE | *REAR LENS*

PIAGGIO 50: Vespa 63-67
R.O. 78715



246470426

ROSSO

LENTE FANALE POSTERIORE | *REAR LENS*

PIAGGIO 125: Vespa 60-64
PIAGGIO 150: Vespa 59-65 • Vespa GS 59-64 • Vespa GL 59-64
R.O. 89441



246470436

ROSSO

LENTE FANALE POSTERIORE | *REAR LENS*
Per faro con visiera superiore | *For rear lamp with upper cover*

PIAGGIO 125: Vespa 65-67 • Vespa Super 65-69
PIAGGIO 150: Vespa Super 65-79 • Vespa GL 64-66 • Vespa Sprint 64-66
PIAGGIO 180: Vespa SS 64-65
R.O. 097440



246470446

ROSSO

LENTE FANALE POSTERIORE | *REAR LENS*

PIAGGIO 125: Vespa Super 65-69
PIAGGIO 150: Vespa Super 65-79 • Vespa Sprint 65-74
PIAGGIO 180: Vespa SS 65-68
R.O. 150369





LENTI FANALI

COMPLETE LIGHTS LENSES

246470456

ROSSO

LENTE FANALE POSTERIORE | *REAR LENS*
Con visiera nera | *With black upper cover*

PIAGGIO 50: Vespa Special 69-72 • Vespa Special Elestart 72-75
R.O. 125681



246470486

ROSSO

LENTE FANALE POSTERIORE | *REAR LENS*

PIAGGIO 50: Vespa L-N-R 63-67 V5A1T
R.O. 104259



246470496

ROSSO

LENTE FANALE SUPERIORE POSTERIORE | *UPPER REAR LENS*

PIAGGIO 150: Vespa GS 59-64



246470506

ROSSO

LENTE FANALE POSTERIORE | *REAR LENS*

PIAGGIO 125: Vespa PX 77-82 • Vespa PXE 81-83
PIAGGIO 150: Vespa PX 78-81 • Vespa PXE 81-85
PIAGGIO 200: Vespa PE 77-82 • Vespa PXE 82-86
R.O. 162741



246470516

ROSSO

LENTE FANALE POSTERIORE | *REAR LENS*
Versioni freno a disco | *Brake disc versions*

PIAGGIO 125: Vespa PXE 98-01
PIAGGIO 150: Vespa PXE 98-01
PIAGGIO 200: Vespa PXE 98-01
R.O. 162741



142710010

CORNICE FARO | *HEADLIGHT RIM*
Per fanale 246410100

PIAGGIO 50: Vespa 50 Special • Vespa Elestart
V5A2-V5A3
R.O. 124200



142710020

CORNICE FARO | *HEADLIGHT RIM*
Per fanale Ø115mm

PIAGGIO 50: Vespa 50
PIAGGIO 90: Vespa SS 65-71 • Vespa R 71-73
PIAGGIO 125: Vespa 125 58-59 • Vespa Super 66-68 • Vespa Primavera • Vespa Primavera ET3
PIAGGIO 150: Vespa Super 66-79
R.O. 151742



142710030

CORNICE FARO | *HEADLIGHT RIM*
Per fanale 246410040 - 246410110 Ø105mm

PIAGGIO 50: Vespa 50 63-71 • Vespa 50 L • Vespa R • Vespa S
R.O. 151731



142710040

CORNICE FARO | *HEADLIGHT RIM*

PIAGGIO 125: Vespa GT
PIAGGIO 150: Vespa GL • Vespa Sprint
PIAGGIO 180: Vespa Super Sport
VNL2T-VLA1T-VLB1T-VSC1T
R.O. 070543



142710050

CORNICE FARO | *HEADLIGHT RIM*
Per fanale 246410070 Ø130mm

PIAGGIO 125: Vespa GTR • Vespa TS
PIAGGIO 150: Vespa Sprint Veloce
PIAGGIO 180-200: Vespa Rally 72-79
VLB1T-VSE1T-VSD1T
R.O. 113891 - 1R000185



142710060

CORNICE FARO | *HEADLIGHT RIM*
Per fanale Ø140mm

PIAGGIO 125-150-200: Vespa PX
VNX2-VLX2-VSX2



142710070

CORNICE FARO | *HEADLIGHT RIM*

PIAGGIO 125: Vespa 125 48-50
V1T15T
R.O. 011902



142710080

CORNICE FARO | *HEADLIGHT RIM*
Per fanale Ø115mm

PIAGGIO 125: Vespa 125 62-65
PIAGGIO 150: Vespa 150 59-65 • Vespa GL 59-62 • Vespa GS 59-64
PIAGGIO 160: Vespa GS 59-64
R.O. 084489 - 1R000189



142710090

CORNICE FARO | *HEADLIGHT RIM*
Per fanale Ø115mm

PIAGGIO 150: Vespa 150 57-58 • Vespa GS 55-58
VS1T-VB1T-VS1-VS2-VS3-VS4
R.O. 025576 - 1R000191



142710100

CORNICE FARO | *HEADLIGHT RIM*
Per fanale Ø105mm

PIAGGIO 125: Vespa 125 53-54
VM1T-VM2T
R.O. 018088



142710110

CORNICE FARO | *HEADLIGHT RIM*
Per fanale Ø105mm

PIAGGIO 150: Vespa 150 55-56
VL2T-VL3T
R.O. 025092 - 1R000193



142710120

CORNICE FARO | *HEADLIGHT RIM*
Per fanale Ø105mm

PIAGGIO 125: Vespa 125 58-61
VNA1T-VNA2T-VNB1T-VNB2T
R.O. 082079 - 1R000194



142710130

CORNICE FARO | *HEADLIGHT RIM*
Per fanale Ø105mm

PIAGGIO 125: Vespa 125 55-56
VN1T-VN2T
R.O.026009



142710140

CORNICE FARO | *HEADLIGHT RIM*
Per fanale Ø105mm

PIAGGIO 150: Vespa 150 55
VL1
R.O. 023444 - 1R000196



246470466

CATADIOTTRO FANALE POSTERIORE | *REFLECTOR REAR LENS*
Per 246420070

PIAGGIO 125: Vespa 125 58-59
PIAGGIO 150: Vespa 150 55-58 • Vespa GS 55-59
R.O. 020914



246470476

CATADIOTTRO FANALE POSTERIORE | *REFLECTOR REAR LENS*
Per 246420080

PIAGGIO 125: Vespa 125 53 • Vespa U 53



121830880

CAPPUCCIO FRECCIA ANTERIORE | *FRONT BLINKER CAP*

PIAGGIO 125: Vespa P125X • Vespa PX 125 E • Vespa PX Arcobaleno • Vespa PX T5
PIAGGIO 150: Vespa P150X • Vespa PX 150 E • Vespa PX Arcobaleno
PIAGGIO 200: Vespa PX 200 E • Vespa PX Arcobaleno
81-07
R.O. 182599



121830890

CAPPUCCIO FRECCIA POSTERIORE | *REAR BLINKER CAP*

PIAGGIO 125: Vespa P125X • Vespa PX 125 E • Vespa PX Arcobaleno • Vespa PX T5
PIAGGIO 150: Vespa P150X • Vespa PX 150 E • Vespa PX Arcobaleno
PIAGGIO 200: Vespa PX 200 E • Vespa PX Arcobaleno
R.O. 230320



121830853

SUPPORTO ELASTICO RELÈ FRECCE | *RELAIS ELASTIC BRACKET*

PIAGGIO: Vari modelli - *Various models*
R.O. 291017 - 290222



121830960 NEW

SUPPORTO ELASTICO RELÈ | *RELAIS ELASTIC BRACKET*

PIAGGIO: Vari modelli - *Various models*
R.O. 942577



246420100

GUARNIZIONE FANALE POSTERIORE | *REAR LIGHT GASKET*
Per fanale RMS 246420010 | *For RMS 246420010*

PIAGGIO 50: Vespa SS 63-67
PIAGGIO 90: Vespa 90 • Vespa SS
PIAGGIO 125: Vespa Primavera 63-66 • Vespa Sprint
R.O. 71193



246420110

GUARNIZIONE FANALE POSTERIORE | *REAR LIGHT GASKET*

PIAGGIO 50: Vespa 63-67



246420120

GUARNIZIONE FANALE POSTERIORE | *REAR LIGHT GASKET*

PIAGGIO 125: Vespa 60-64
PIAGGIO 150: Vespa GS 59-61 • Vespa GL 63-64
R.O. 89222



246420130

GUARNIZIONE FANALE POSTERIORE | *REAR LIGHT GASKET*

PIAGGIO 125: Vespa 65-66 • Vespa Sprint 65-74
PIAGGIO 150: Vespa Sprint 65-74 • Vespa Super 65-79
PIAGGIO 180: Vespa SS 65-68
R.O. 70767



246473000 NEW

CATADIOTTRO ROTONDO CON VITE | *ROUND REFLECTOR WITH SCREW*
Colore: Ambra | *Color: Amber*



246473010 NEW

CATADIOTTRO ROTONDO AUTOADESIVO | *ROUND ADHESIVE REFLECTOR*
Colore: Ambra | *Color: Amber*



246473020 NEW

CATADIOTTRO STONDATO CON VITE E BULLONE | *ROUND REFLECTOR WITH SCREW AND BOLD*
Dimensioni: 95x25 mm | *Dimension: 95x25 mm*
Colore: Ambra | *Color: Amber*



246473021 NEW

CATADIOTTRO STONDATO CON VITE E BULLONE | *ROUND REFLECTOR WITH SCREW AND BOLD*
Dimensioni: 95x25 mm | *Dimension: 95x25 mm*
Colore: Rosso | *Color: Red*



246473030 NEW

CATADIOTTRO STONDATO AUTOADESIVO | *ROUND ADHESIVE REFLECTOR*
Dimensioni: 95x25 mm | *Dimension: 95x25 mm*
Colore: Ambra | *Color: Amber*



246473031 NEW

CATADIOTTRO STONDATO AUTOADESIVO | *ROUND ADHESIVE REFLECTOR*
Dimensioni: 95x25 mm | *Dimension: 95x25 mm*
Colore: Rosso | *Color: Red*



246473040 NEW

CATADIOTTRO QUADRATO CON VITI | *RECTANGULAR REFLECTOR WITH SCREWS*
Dimensioni: 95x25 mm | *Dimension: 95x25 mm*
Colore: Ambra | *Color: Amber*



246473041 NEW

CATADIOTTRO QUADRATO CON VITI | *RECTANGULAR REFLECTOR WITH SCREWS*
Dimensioni: 95x25 mm | *Dimension: 95x25 mm*
Colore: Rosso | *Color: Red*



246473050 NEW

CATADIOTTRO QUADRATO AUTOADESIVO | *RECTANGULAR ADHESIVE REFLECTOR*
Dimensioni: 95x25 mm | *Dimension: 95x25 mm*
Colore: Ambra | *Color: Amber*



246473051 NEW

CATADIOTTRO QUADRATO AUTOADESIVO | *RECTANGULAR ADHESIVE REFLECTOR*
Dimensioni: 95x25 mm | *Dimension: 95x25 mm*
Colore: Rosso | *Color: Red*



246480490

LUCE LED

LUCE TARGA LED | *PLATE NUMBER LIGHT*
Luce a led | *Led light*
Universale | *Universal*



246480440

SPIE INDICATRICI | *INDICATOR LIGHTS*

PIAGGIO 125-150-200: Vespa PX 1° serie
VNX-VLX-VSX-VLB-VBC
R.O. 139980-163682





PORTALAMPADA

HOLDERS FOR BULBS

246472000 NEW

PORTALAMPADA FANALE ANTERIORE | *FRONT LIGHT BULB SOCKET*
Per fanale 246410080 | *For 246410080 front light*

PIAGGIO 125: Vespa GT
PIAGGIO 150: Vespa GL • Sprint
PIAGGIO 180: Vespa SS
R.O. 97406



246472010 NEW

PORTALAMPADA FANALE ANTERIORE | *FRONT LIGHT BULB SOCKET*
Per fanale 246410060 | *For 246410060 front light*

PIAGGIO 50: Vespa SS
PIAGGIO 90: Vespa SS
PIAGGIO 125: Vespa GT • Vespa GTR • Vespa TS • Vespa SS • Vespa Super • Primavera • ET3 • Vespa 125
PIAGGIO 150: Vespa GL • Vespa GS • Sprint • Vespa Sprint Veloce • Vespa Super • Vespa 150
PIAGGIO 180: Vespa Rally • Vespa SS
PIAGGIO 200: Vespa Rally
R.O. 92780



246472020 NEW

PORTALAMPADA FANALE ANTERIORE | *FRONT LIGHT BULB SOCKET*
Per fanale 246410090 | *For 246410090 front light*

PIAGGIO 125: Vespa PE • Vespa PX • Arcobaleno
PIAGGIO 150: Vespa PE • Vespa PX • Arcobaleno
PIAGGIO 200: Vespa PE • Vespa PX • Arcobaleno
R.O. 162926



246472030 NEW

PORTALAMPADA FANALE ANTERIORE | *FRONT LIGHT BULB SOCKET*
Per fanale 246410190 | *For 246410190 front light*

PIAGGIO 125: Vespa 125 VNA1T/VNA2T • Vespa 125 VNB1T/VNB2T
R.O. 87311



246472040 NEW

PORTALAMPADA FANALE ANTERIORE | *FRONT LIGHT BULB SOCKET*
Per fanale 246410210 | *For 246410210 front light*

PIAGGIO 125: Vespa 125 VM1T/VM2T • Vespa 125 VN1T/VN2T
PIAGGIO 150: Vespa 150 VL1T/VL2T/VL3T • Vespa 150 VB1T • Vespa GS VS1T/VS2T
R.O. 25972



246472110 NEW

PORTALAMPADA FANALE ANTERIORE | *FRONT LIGHT BULB SOCKET*

MBK 50: Booster • Mach G • Ovetto
MBK 100: Ovetto
MBK 125: Thunder
MBK 150: Thunder
YAMAHA 50: Bw's • Bw's Naked • Jog R • Neo's • Tzr
YAMAHA 100: Neo's
YAMAHA 125: Maxster
YAMAHA 150: Maxster
R.O. 3WGH43120000





246472120 NEW

PORTALAMPADA FANALE ANTERIORE | *FRONT LIGHT BULB SOCKET*

MBK 50: Booster Spirit • Nitro • Stunt
MBK 100: Nitro
YAMAHA 50: Aerox • Bw'S Original • Slider
YAMAHA 100: Aerox
R.O. 4JCH43400000



246472160 NEW

PORTALAMPADA FANALE ANTERIORE | *FRONT LIGHT BULB SOCKET*

PIAGGIO 125: Fly • Liberty • Liberty RST
PIAGGIO 150: Fly • Liberty MOC • Liberty 4T Euro 3
PIAGGIO 200: Liberty • Liberty RST • Liberty 4T Euro 3



246472170 NEW

PORTALAMPADA FANALE ANTERIORE | *FRONT LIGHT BULB SOCKET*

INNOCENTI 125: Lambretta Li 3 serie • Lambretta Special
INNOCENTI 150: Lambretta Li 3 serie • Lambretta Special • Lambretta Sx
INNOCENTI 175: Lambretta Tv 2/3 serie
INNOCENTI 200: Lambretta SX
R.O. 19980070



246472180 NEW

PORTALAMPADA FANALE ANTERIORE | *FRONT LIGHT BULB SOCKET*

INNOCENTI 125: Lambretta Li 1/2 serie
INNOCENTI 150: Lambretta Li 1/2 serie
R.O. 15080030



246472050 NEW

PORTALAMPADA PER LAMPADINE H4 | *HOLDER FOR H4 BULBS*
Con cavi | *With cables*

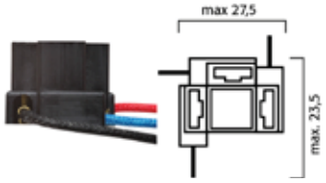

246472060 NEW

PORTALAMPADA PER LAMPADINE H1 | *HOLDER FOR H1 BULBS*

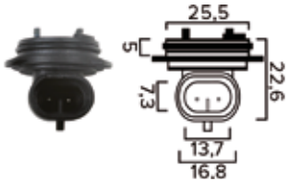

246472070 NEW

PORTALAMPADA PER LAMPADINE H7 | *HOLDER FOR H7 BULBS*

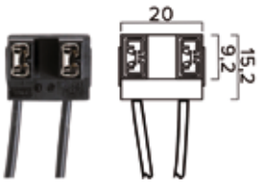

246472080 NEW

PORTALAMPADA PER LAMPADINE H8/H9/H11 | *HOLDER FOR H8/H9/H11 BULBS*
Con cavi | *With cables*

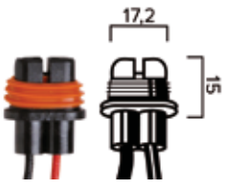

246472090 NEW

PORTALAMPADA PER LAMPADINE T10 WB | *HOLDER FOR T10 WB BULBS*

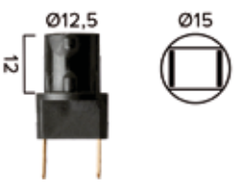

LAMPADINE ALOGENE - *HALOGEN LAMPS*

BA15s					Volt [V]	Watt [W]	Note
246510215					12	10	G18
246510225					12	5	G18
246510235					12	10	G18
246515075		OSRAM		E-MARK	12	21	P21W
246510656				E-MARK	6	10	R10W
246515113		OSRAM		E-MARK	12	10	R10W
246510646				E-MARK	6	5	R5W
246515111		OSRAM		E-MARK	12	5	R5W
246510195					12	21	S25
246510205					12	21	S25

BA20d					Volt [V]	Watt [W]	Note
246510305					12	25/25	-
246510315					12	35/35	-
246510325					12	45/40	-
246510351 NEW					12	35/35	-
246510356 NEW					12	35/35	-
246510346				E-MARK	6	25/25	S1
246515166		OSRAM		E-MARK	12	25/25	S1
246510319				E-MARK	12	35/35	S2
246515163		OSRAM		E-MARK	12	35/35	S2
246515167		OSRAM		E-MARK	12	35/35	S2



BA9s					Volt [V]	Watt [W]	Note
246510335					6	4	-
246510415					12	4	-
246515084		OSRAM			12	5	-
246515085		OSRAM		E-MARK	12	4	T4W

BAU15s					Volt [V]	Watt [W]	Note
246515077		OSRAM		E-MARK	12	21	PY21W
246515115		OSRAM		E-MARK	12	10	RY10W
246510465					12	21	S25
246510456				E-MARK	12	10	T16

BAX9s					Volt [V]	Watt [W]	Note
246515109		OSRAM		E-MARK	12	6	H6W

BAY15d					Volt [V]	Watt [W]	Note
246510365					12	21/5	-
246510375					12	21/5	-
246515082		OSRAM		E-MARK	12	21/5	P21/5W

BAY9s					Volt [V]	Watt [W]	Note
246515110		OSRAM		E-MARK	12	21	H21W

H1				Volt [V]	Watt [W]	Note
246510030				12	55	-
246510035				12	55	-
246515034		OSRAM	E-MARK	12	55	-

H3				Volt [V]	Watt [W]	Note
246510040				12	55	-
246510045				12	55	-
246515038		OSRAM	E-MARK	12	55	-

H4				Volt [V]	Watt [W]	Note
246510050				12	60/55	-
246510055				12	60/55	-
246510065				12	35/35	-
246515040		OSRAM	E-MARK	12	60/55	-
246515145		OSRAM	E-MARK	12	60/55	-
246515146		OSRAM	E-MARK	12	60/55	-
246515152		OSRAM	E-MARK	12	60/55	-
246515156		OSRAM	E-MARK	12	60/55	-
246515157		OSRAM	E-MARK	12	60/55	-
246515164		OSRAM	E-MARK	12	60/55	-



H7					Volt [V]	Watt [W]	Note
246510110			●		12	55	-
246510115			○		12	55	-
246515043		OSRAM	○	E-MARK	12	55	-
246515147		OSRAM	○	E-MARK	12	55	-
246515148		OSRAM	○	E-MARK	12	55	-
246515153		OSRAM	○	E-MARK	12	55	-
246515158		OSRAM	○	E-MARK	12	55	-
246515159		OSRAM	○	E-MARK	12	55	-
246515165		OSRAM	○	E-MARK	12	55	-

H8					Volt [V]	Watt [W]	Note
246510070			●		12	35	-
246510075			○		12	35	-
246515046		OSRAM	○	E-MARK	12	35	-
246515149		OSRAM	○	E-MARK	12	35	-
246515160		OSRAM	○	E-MARK	12	35	-

H9					Volt [V]	Watt [W]	Note
246515049		OSRAM	○	E-MARK	12	65	-

H11					Volt [V]	Watt [W]	Note
246510085			○		12	55	-
246515052		OSRAM	○	E-MARK	12	55	-
246515150		OSRAM	○	E-MARK	12	55	-
246515154		OSRAM	○	E-MARK	12	55	-
246515161		OSRAM	○	E-MARK	12	55	-

HB3					Volt [V]	Watt [W]	Note
246510095			○		12	65	-
246515064		OSRAM	○	E-MARK	12	60	-

HB4					Volt [V]	Watt [W]	Note
246515067		OSRAM	○	E-MARK	12	51	-

HS1					Volt [V]	Watt [W]	Note
246510181 NEW			●	E-MARK	12	35/35	-
246510185			○		12	35/35	-
246515151		OSRAM	○	E-MARK	12	35/35	-
246515155		OSRAM	○	E-MARK	12	35/35	-
246515162		OSRAM	○	E-MARK	12	35/35	-
246515168		OSRAM	○	E-MARK	12	35/35	-

HS5					Volt [V]	Watt [W]	Note
246510745			○		12	35/30	-

P26S					Volt [V]	Watt [W]	Note
246510295			○		12	15	-
246510420			●		12	15	-
246510425			○		12	15	-
246510430			●		12	20	-
246510435			○		12	20	-
246510476			○	E-MARK	6	15	SB25



P45T				Volt [V]	Watt [W]	Note
246510105				12	45/40	-
246515071		OSRAM	E-MARK	12	45/40	R2

PGJ19-X				Volt [V]	Watt [W]	Note
246515000		OSRAM	E-MARK	12	13	Fendinebbia (H8/H11/H16)

PY20d				Volt [V]	Watt [W]	Note
246515001		OSRAM	E-MARK	12	13	Fendinebbia (H10)

SV8.5-8				Volt [V]	Watt [W]	Note
246515123		OSRAM	E-MARK	12	5	C5W

T5				Volt [V]	Watt [W]	Note
246510245				12	1.2	-
246510255				12	2	-
246510275				12	2.3	-

T10				Volt [V]	Watt [W]	Note
246510265				12	3	-
246510285				12	5	-

T11				Volt [V]	Watt [W]	Note
246510156				6	5	Lunghezza 35 mm
246510165				12	10	Lunghezza 39 mm
246510175				12	5	Lunghezza 39 mm
246510626				6	10	Lunghezza 40 mm

T15					Volt [V]	Watt [W]	Note
246510126	NEW				6	15	Lunghezza 42 mm
246510125					6	15	Lunghezza 44 mm
246510135					6	18	Lunghezza 44 mm
246510145					12	15	Lunghezza 44 mm

T20				Volt [V]	Watt [W]	Note
246510385				12	21	-
246510395				12	21	-
246510405				12	21/5	-
246510445				12	21/5	-

TUBOLARE				Volt [V]	Watt [W]	Note
246510025				12	23	Poli innesto 180°
246510015			E-MARK	12	21	Poli innesto 90°

W2,1x9,5d					Volt [V]	Watt [W]	Note
246515033		OSRAM		E-MARK	12	5	W5W



W2.1x9.5d						Volt [V]	Watt [W]	Note
246510280						12	5	-
246515088		OSRAM				12	2	-
246515096		OSRAM			E-MARK	12	16	W16W
246515089		OSRAM			E-MARK	12	3	W3W
246515091		OSRAM			E-MARK	12	5	W5W
246515093		OSRAM			E-MARK	12	5	WY5W

W2x4.6d						Volt [V]	Watt [W]	Note
246515104		OSRAM				12	1,2	-
246515106		OSRAM				12	2	-

W3x16d						Volt [V]	Watt [W]	Note
246515100		OSRAM			E-MARK	12	21	W21W

W3x16q						Volt [V]	Watt [W]	Note
246515102		OSRAM			E-MARK	12	21/5	W21/5W

WX3x16d						Volt [V]	Watt [W]	Note
246515099		OSRAM			E-MARK	12	21	WY21W

LAMPADINE A LED - *LED LAMPS*

9006			Volt [V]	Numero Led	Note
246510805			12	26	580 Lumen

BA15d			Volt [V]	Numero Led	Note
246510885			12	24	410 Lumen
246510895			12	24	410 Lumen

BA15s			Volt [V]	Numero Led	Note
246510510			12	12	-
246510925			12	8	150 Lumen
246510935			12	8	150 Lumen
246510955			12	24	280 Lumen
246510905			12	27	450 Lumen
246510915			12	27	450 Lumen
246510500			12	5	G18
246510505			12	5	G18
246515019		OSRAM E-MARK	12	-	P21W
246515020		OSRAM E-MARK	12	-	P21W
246515021		OSRAM E-MARK	12	-	P21W

BA20d			Volt [V]	Numero Led	Note
246510945			12	-	480 Lumen

BA9s			Volt [V]	Numero Led	Note
246510550			12	1	-
246510555			12	1	-
246510985			12	9	140 Lumen
246510995			12	9	140 Lumen
246510965			12	5	90 Lumen
246510975			12	5	90 Lumen

BAU15s					Volt [V]	Numero Led	Note
246515022		OSRAM		E-MARK	12	-	PY21W

BAY15d					Volt [V]	Numero Led	Note
246510540					12	12	-
246510542					12	12	-
246510545					12	12	-
246511025					12	24	410 Lumen
246511035					12	24	410 Lumen
246515003		OSRAM		E-MARK	12	-	P21/5W

BAY15S			Volt [V]	Numero Led	Note
246511005			12	24	450 Lumen
246511015			12	24	450 Lumen

C10W			Volt [V]	Numero Led	Note
246511055		○	12	4	100 Lumen
246511045		○	12	6	150 Lumen
246511065		○	12	9	150 Lumen
246511075		○	12	6	150 Lumen

H4			Volt [V]	Numero Led	Note
246510785		○	12	24	600 Lumen

H7			Volt [V]	Numero Led	Note
246510610		●	12	14	-
246510615		○	12	14	-
246510775		○	12	27	580 Lumen

H8 - H9 - H11			Volt [V]	Numero Led	Note
246510795		○	12	26	580 Lumen

HB3			Volt [V]	Numero Led	Note
246510765		○	12	27	580 Lumen

SV8.5			Volt [V]	Numero Led	Note
246510595		○	12	6	-
246510605		○	12	4	-



T10			Volt [V]	Numero Led	Note
246510815			12	13	165 Lumen
246510845			12	2	30 Lumen
246510825			12	6	90 Lumen
246510835			12	6	90 Lumen
246510855			12	6	90 Lumen

T20			Volt [V]	Numero Led	Note
246510530			12	6	-
246510531			12	6	-
246510535			12	6	-
246510865			12	24	280 Lumen
246510875			12	24	280 Lumen
246511085			12	24	280 Lumen
246511095			12	24	280 Lumen

W2,1x9,5d					Volt [V]	Numero Led	Note
246515005		OSRAM		E-MARK	12	-	W5W
246515006		OSRAM		E-MARK	12	-	W5W

W2.1x9.5d			Volt [V]	Numero Led	Note
246510560			12	1	-
246510561			12	1	-
246510565			12	1	-
246510570			12	4	-
246510571			12	4	-
246510575			12	4	-

W3x16d			Volt [V]	Numero Led	Note
246515023	OSRAM	E-MARK	12	-	W21W

W3x16q			Volt [V]	Numero Led	Note
246515196 NEW	OSRAM		12	-	-

KIT CONVERSIONE A LED - *LED CONVERSION KIT*

246510685

LAMPADA LED H4 ANABBAGLIANTI-ABBAGLIANTI | *H4 LED BULB HIGH AND LOW BEAM*
40/20W
6000 K



246510695

LAMPADA LED H7 | *H7 LED BULB*
40W
6000 K



246510715

LAMPADA LED H1 | *H1 LED BULB*
30W
Giallo = 3000 K | *Yellow = 3000 K*
Bianco = 6000 K | *White = 6000 K*
Blu = 7000 K | *Blue = 7000 K*



246510725

LAMPADA LED H3 | *H3 LED BULB*
30W
Giallo = 3000 K | *Yellow = 3000 K*
Bianco = 6000 K | *White = 6000 K*
Blu = 7000 K | *Blue = 7000 K*



246510735

LAMPADA LED HB3 | *HB3 LED BULB*
30W
Giallo = 3000 K | *Yellow = 3000 K*
Bianco = 6000 K | *White = 6000 K*
Blu = 7000 K | *Blue = 7000 K*



LED AMBIENT CONNECT

LEDambient CONNECT personalizza l'estetica del veicolo con prodotti LED di qualità progettati per aggiungere colore al veicolo. Semplici da installare e utilizzare, questi innovativi prodotti LED sfruttano la tecnologia Bluetooth. Una volta collegati all'app OSRAM LEDambient CONNECT è possibile sincronizzare fino a 10 sistemi LEDambient CONNECT con la musica per dar loro lo stesso ritmo, i colori possono essere preselezionati e il tutto è controllabile con un solo dispositivo. Tutti questi prodotti si collegano direttamente alla batteria o a un'alimentazione 12V, senza necessità di interruttori.

246515169

PULSE CONNECT LEDEXT101



246515170

PULSE CONNECT LEDINT103



246515171

HYBRID CONNECT LEDEXT102-03



246515172

HYBRID CONNECT LEDEXT102-04



246515173

HYBRID CONNECT LEDEXT102-10



246515174

TUNING LIGHTS CONNECT LEDINT102



246515175

TUNING LIGHTS CONNECT LEDINT104



LED AMBIENT TUNING LIGHTS

Un must per gli automobilisti attenti al design: le innovative LEDambient TUNING LIGHTS offrono soluzioni d'illuminazione flessibili, aggiungendo eleganza agli interni con un solo pulsante. Le strisce LED sono di facile e rapida installazione, e sono controllate comodamente tramite telecomando.

246515176

TUNING LIGHTS LEDINT201



246515177

TUNING LIGHTS LEDINT201-SEC



246515178

TUNING LIGHTS LEDINT202





246090150

PULSANTE ARRESTO LATO SINISTRO | *LEFT SIDE STOP BUTTON*
Funzioni: arresto motore, con connettore | *Functions: engine stop, with connector*



246090160

PULSANTE AVVIAMENTO | *START BUTTON*
Funzioni: avviamento motore, con connettore | *Functions: engine start, with connector*



246090170

PULSANTE MODE | *MODE SWITCH*
Funzioni: mode computer, con connettore | *Functions: mode computer, with connector*



246110500

INTERUTTORE TERGICRISTALLO | *WINDSCREEN WIPER SWITCH*

PIAGGIO 50: Ape • Ape Mix • Ape FL-FL2 • Ape FL3 Europa • Ape RST Mix
R.O. 584097



246130010

PULSANTE CLACSON | *HORN BUTTON*

GILERA 50: Easy Storm • Storm • Typhoon • Typhoon X-XR
GILERA 125: Typhoon • Typhoon X-XR
PIAGGIO 50: Ape • Ape FL-FL2-FL3 Europa • Free • NRG • Sfera • Zip • Zip SP
PIAGGIO 125: Hexagon • Skipper
R.O. 292364 - 290679



246130020

PULSANTE CLACSON | *HORN BUTTON*

GILERA 50: Easy Storm • Storm • Typhoon • Typhoon X-XR
GILERA 125: Typhoon • Typhoon X-XR
PIAGGIO 50: Ape • Ape FL-FL2-FL3 Europa • Free • NRG • Sfera • Zip • Zip SP
PIAGGIO 125: Hexagon • Skipper
R.O. 292364 - 290679





246130050

PULSANTE SPEGNIMENTO | *STOP BUTTON*

PIAGGIO 200: Vespa Rally
VSE1T
R.O. 073185



246130060

PULSANTE CLACSON | *HORN BUTTON*

APRILIA 50-125: Sport City One • SR Motard • Scarabeo Motore Piaggio
APRILIA 300-400: Scarabeo Light
DERBI 50-125-15-200: Atlantis • Boulevard • Sonar • Variant Sport
GILERA 50: Runner • Stalker • Storm
GILERA 125-180-200: Runner VX-VXR • Runner FX-FXR
PIAGGIO 50: Fly • Liberty • NRG • Typhoon • Sfera • Zip • Vespa ET2-ET4
PIAGGIO 125-150-200-250: Beverly • Fly • Liberty • Hexagon • Skipper • Vespa ET4 • Vespa Granturismo • X8 • X9 • X-Evo
PIAGGIO 400-500: Beverly • X8 • X9 • X-Evo
R.O. 58058R



246130070

PULSANTE CLACSON | *HORN BUTTON*

DERBI 500: Fuoco
PIAGGIO 50-125-150: Liberty • MP3 • Vespa LX • Vespa GTS • X7
PIAGGIO 250-300-400-500: MP3 • Vespa GTS • X7 • Beverly
R.O. 641358



246130200

PULSANTE MODE | *MODE SWITCH*

GILERA 500: Fuoco
PIAGGIO 125-250-300-400-500: Beverly • Liberty • Liberty Elettrico • MP3 • X-Evo
R.O. 58255R - 639140



246130210

PULSANTE TRIP | *TRIP SWITCH*

PIAGGIO 125-300: MP3 Ibrido
R.O. 641837



246130220

PULSANTE EMERGENZA | *EMERGENCY BUTTON*

APRILIA 250-300-400: Scarabeo Light
R.O. AP8127894
GILERA 500: Fuoco
PIAGGIO 125-250: MP3 • X-Evo • X9
PIAGGIO 300-400-500: MP3 • X9
R.O. 58284R - 511411



246135030

PULSANTE AVVIAMENTO | *START BUTTON*

APRILIA 50-125: Sport City One • SR Motard
APRILIA 300-400: Scarabeo Light
GILERA 50-125-150: Boulevard • Sonar • Variant Sport
PIAGGIO 50-125-200: Zip • Fly • NRG • Vespa ET4 • Vespa GTS • Liberty • Typhoon • X8 • X9
PIAGGIO 250-300-400-500: Beverly • X9 • Carnaby • Hexagon • X-Evo
R.O. 58057R



246135040

PULSANTE AVVIAMENTO | *START BUTTON*

APRILIA 50: SR Motard
GILERA 500: Fuoco
PIAGGIO 50-125-150: Vespa LX • Vespa GTS • Vespa Granturismo • MP3 • Typhoon • X7
PIAGGIO 250-300-400-500: Beverly • MP3 • X7 • Vespa GTS
R.O. 641359



246135050

PULSANTE AVVIAMENTO | *START BUTTON*

GILERA 50: Easy Storm • Storm • Typhoon • Typhoon X-XR
GILERA 125: Typhoon • Typhoon X-XR
PIAGGIO 50: Ape • Ape FL-FL2-FL3 Europa • Free • NRG • Sfera • Zip • Zip SP
PIAGGIO 125: Hexagon • Skipper
R.O. 294398





246135060

PULSANTE AVVIAMENTO | *START BUTTON*

PIAGGIO 50: Vespa N • Vespa PK XL PLurimatic • Vespa PK XL Rush • Vespa PK XL • Vespa PK
PIAGGIO 125: Vespa PK XL • Vespa PX 30 anni • Vespa PX Eu2 • Vespa PX T5 • Vespa PX • Vespa PXE Arcobaleno
PIAGGIO 150: Vespa PX • Vespa PXE Arcobaleno
R.O. 580937



246130240

PULSANTE REGOLAZIONE AMMORTIZZATORE | *SHOCK ABSORBER REGULATION BUTTON*

PIAGGIO 500: X10 12-14
R.O. 643231



246130280

PULSANTE ANTI SLIP | *ASR BUTTON*

PIAGGIO 125: X10 12-15
PIAGGIO 300-350-500: Beverly • X10 • MP3
R.O. 643130



246130230

PULSANTE APERTURA SELLA | *SADDLE OPENING BUTTON*

APRILIA 850: SRV
GILERA 800: GP
PIAGGIO 125-150-200: Beverly• MP3 Ibrido • MP3 • Vespa GT • Vespa GTS • Vespa GTV • Vespa LX Primavera • Vespa Sprint • X10 • X8 • X9
PIAGGIO 250-300-350: Beverly • MP3 • Vespa GT • Vespa GTS • Vespa GTV • X8 • X9 • X10
PIAGGIO 400-500: Beverly • MP3 • X-Evo • X8
R.O. 582988





DEVIO FRECCE

BLINKERS SWITCHES

246110010

GILERA 50-125: Storm • Typhoon X-XR
PIAGGIO 50: Ape FL-FL2 • Ape RST Mix • Ape FL3 Europa • Free • NRG • NTT • Quartz • Sfera • Zip • Zip SP
PIAGGIO 125: Skipper
R.O. 294917



246110020

SINISTRO | *LEFT*
MBK 50: Booster Spirit • Booster NG • Booster • Stunt • Mach
YAMAHA 50: BW'S Next Generation • BW'S Original • BW'S • Slider • Jog • Aerox
R.O. 5JHH39760000



246110030

SINISTRO | *LEFT*
MBK 50: Booster NG • Booster Spirit
YAMAHA 50: BW'S Original • BW'S Next Generation
R.O. 5FXH39760000



246110040

PIAGGIO 125: Vespa PX
R.O. 215669



246110060

PIAGGIO 50-125-150-250-300: Vespa S • Vespa LX • Vespa ET4 • Vespa GTS • Sfera • Liberty
R.O. 294723



246110070

PIAGGIO 50: Vespa PK • Vespa N • Vespa PK Automatica • Vespa PK XL Plurimatic • Vespa PK XL Rush • Vespa PK XL
PIAGGIO 125: Vespa PK XL • Vespa PX Eu2 • Vespa PX 30 Anni • Vespa PX T5 • Vespa PX • Vespa PXE Arcobaleno
R.O. 580395





246110080

APRILIA 250-300-400: Scarabeo Light
R.O. AP8127892
PIAGGIO 125-200-250-500: X9 Evolution • X9 Amalfi • X9
R.O: 638708



246110090

APRILIA 50-125-250: Sport City One • SR Motard • Scarabeo Light • Scarabeo Motore Piaggio
DERBI 50-125-150-200: Boulevard • Sonar • Variant Sport
GILERA 50-125-200: Runner Purejet • Runner SP • Stalker • Storm • Runner FX-FXR • Runner VX-VXR
GILERA 500: Fuoco
PIAGGIO 50-125-250-300-500: Fly • Liberty • NRG • Typhoon • Zip • Beverly • Hexagon • MP3 • X7 • X8
R.O. 58056R



246110100

SINISTRO | *LEFT*
PIAGGIO 50: Vespa LXV Navy • Vespa LXV
R.O. 640927



246110110

SINISTRO | *LEFT*
PIAGGIO 125: Vespa GTV Navy • Vespa LXV Navy
PIAGGIO 250: Vespa GTV
R.O. 640930





DEVIO LUCI

LIGHTS SWITCHES

246090030

DESTRO | *RIGHT*

MBK 50: Booster Spirit • Booster NG • Booster • Stunt • Mach
YAMAHA 50: BW'S Next Generation • BW'S Original • BW'S • Slider • Jog • Aerox
R.O. 5JHH39750000



246090040

DESTRO | *RIGHT*

MBK 50: Booster NG • Booster Spirit
YAMAHA 50: BW'S Original • BW'S Next Generation
R.O. 5FXH39750000



246090050

PIAGGIO 150: Vespa 150 63 • Vespa GL • Vespa Sprint
R.O. 087558



246090060

3 Posizioni | *3 Settings*

PIAGGIO 90: Vespa 90 78-83
PIAGGIO 125: Vespa Primavera 67-83 • Vespa GT • Vespa GTR • Vespa TS
R.O. 092041



246090070

2 Posizioni | *2 Settings*

PIAGGIO 50: Vespa R 70-83 • Vespa L • Vespa 50 • Ape 50
R.O. 092654



246090080

3 Posizioni | *3 Settings*

PIAGGIO 125: Vespa Primavera ET3
PIAGGIO 200: Vespa Rally
R.O. 143324



246090090

PIAGGIO 125: Vespa PK
R.O. 215668



246090100

(Senza batteria - Senza avviamento elettrico) | *(Without battery and electric starter)*

PIAGGIO 125-150-200: Vespa PX • Vespa PXE Arcobaleno >83 • Vespa PK125S-PK125E >82 (Mercato estero - *Foreign market*)
R.O. 217898



246090110

PIAGGIO 50: Vespa 50 Special
R.O. 123152





246090180

DESTRO | *RIGHT*

KYMCO 50: Agility 2T • Agility 4T • Agility RS • Super 8
KYMCO 125: Agility Carry • Agility R16 • Agility RS
KYMCO 200: Agility R16 • Agility R16 Plus
R.O. 00135055



246090190

PIAGGIO 50: Liberty • Vespa ET2 • Vespa ET4 • Vespa LX
PIAGGIO 125-150-300: Vespa Granturismo • Vespa GTS • Vespa LX • Vespa S
R.O. 294877



246090200

DEVIO LUCI CON SPRAZZO | *LIGHT SWITCH WITH FLASH*

PIAGGIO: Beverly • MP3 • X7 • X8 • X9 • X-Evo
R.O. 642967



246090210

PIAGGIO 50: Liberty 97-05 • Sfera RST 95-97 • Vespa ET2 97-05 • Vespa ET4 96-05
PIAGGIO 125: Liberty • Sfera • Vespa ET4
R.O. 293571



246090220

DERBI 125-150-200: Boulevard
GILERA 50-125-180-200: Stalker • Runner • Runner FX-FXR • Runner VX-VXR
PIAGGIO 50: Typhoon 01- 04
PIAGGIO 125-180-200: Hexagon GT-GTX • Hexagon LX-LXT • Skipper • Super Hexagon GTX • X9 • Zip
PIAGGIO 500: Beverly • X9
R.O. 294340



246090230

PIAGGIO 50: Zip • Liberty • Fly • NRG Power
PIAGGIO 125: Zip • Liberty • Fly
R.O. 642968



246090240

PIAGGIO 50: Vespa S 68-82
V5SA1T
R.O. 073169



246090250

2 Posizioni | *2 Settings*

GILERA 50: Runner 97-00
PIAGGIO 50: NRG Extreme 99-00 • NRG MC3 01-04 • Zip 4T 00-05 • Zip SP 01-04 • Zip 00-04
R.O. 294714



246090260

PIAGGIO 125: Vespa PX 30 Anni 07-08 • Vespa PX Eu2 01-07 • Vespa PX 11-13
PIAGGIO 150: Vespa PX 11-13
R.O. 583090





DEVIO LUCI

LIGHTS SWITCHES

246090270

GILERA 125: Typhoon 95-98 • Typhoon X-XR 99-00
PIAGGIO 50: Zip RST 96-99
PIAGGIO 80: Skr City 99
PIAGGIO 125: Hexagon 94-97 • Skipper 94-97
R.O. 291954



246090280

PIAGGIO 50: Ape FL-FL2 89-95 • Ape FL3 Europa 96-99 • Ape Mix 2T 98-08 • Ape RST Mix 99-03 • Ape 09 • Sfera 91-93
R.O. 294370



246090290

DESTRO | *RIGHT*
PIAGGIO 50: Vespa LXV 2T Navy 08 • Vespa LXV 2T 06-09
R.O. 640926



246090300

DESTRO | *RIGHT*
PIAGGIO 125: Vespa GTV 4T Navy Eu3 08
R.O. 640928



246090310

DESTRO | *RIGHT*
PIAGGIO 125: Vespa LXV 4T Navy Eu3 07-08 • Vespa GTV 4T Navy Eu3 07
R.O. 640929



246110050

SINISTRO | *LEFT*
KYMCO 50-125-150-200: Agility • People S • Super 8
Vari modelli e CC - *Various models and CC*
R.O. 00152643





246090320 NEW

PIAGGIO 125: Ape 350 65-78
PIAGGIO 150: Ape 400 65-73
PIAGGIO 175: Ape 450 64-68 • Ape 500 66-74
PIAGGIO 190: Ape MP 500 68-78 • Ape MP 600 69-78
R.O. 057663



246090330 NEW

PIAGGIO 220: Ape MP P501-P601 78-96
PIAGGIO 400: Ape Classic E4 14-18
PIAGGIO 420: Ape Calessino-VME 07-12 • Ape MP601 Classic 06-13
R.O. B073366



246091010 NEW

GRUPPO DEVIO LUCI E CLACSON | *HORN CONTROL GROUP*
PIAGGIO 420: Ape Poker Benzina 93 • Ape Poker Diesel 93-97
R.O. 250229



246091020 NEW

GRUPPO DEVIO LUCI E CLACSON | *HORN CONTROL GROUP*
PIAGGIO 220: Ape TM 703-P703V-FL2 84-05
PIAGGIO 420: Ape TM P703-P703V Diesel 87-04
R.O. 261682



246091030 NEW

GRUPPO DEVIO LUCI E CLACSON | *HORN CONTROL GROUP*
PIAGGIO 220: Ape Car P2-P3 79-85
PIAGGIO 420: Ape Car-Max Diesel 86-96
R.O. 261683





246070010

APRILIA 50
CAGIVA 50
HONDA 50
MALAGUTI 50: R.O. 01801600
MBK 50
PEUGEOT 50-125
SUZUKI 50
YAMAHA 50-125



246070020

12V C.C.

APRILIA 50: R.O. AP8212587



246070030

E3

12V C.C. - Ø71/65
Staffa foro filettato Ø 6 mm | *Threaded bracket hole Ø 6 mm*

GILERA 50-125-200-250-300-500
PIAGGIO 50-125-150-180-200-250-500
R.O. CM071801-58034R



246070040

E3

6V C.A. - 18-24 W
Modelli senza batteria | *No battery models*

PIAGGIO 50: Vespa S 63-68
PIAGGIO 90: Vespa 90 63-68
PIAGGIO 125-150-200: Vespa Primavera 67-83 • Vespa GT 66-73 • Vespa Super 66-68
V5SA1-V9A1-VMA2-VNL2-VNC1
R.O. 070300



246070050

E3

12V C.A. - 18-24 W
Modelli senza batteria | *No battery models*

PIAGGIO 125-150-200: Vespa PX
R.O. 2189379



246070060

E3

12V C.C. - Ø71/65
Staffa foro Ø 6 mm | *Bracket hole Ø 6 mm*

GILERA 50-125-180-200-500
PIAGGIO 50-125-150-200-250-400
R.O. 294828-58033R-CM071803





246070070

12V C.C. - Ø71/65
Staffa foro filettato Ø 6 mm | *Threaded bracket hole Ø 6 mm*

GILERA 50
PIAGGIO 50-125-250-400
R.O. CM071804



246070080

12V C.C. - Ø71/65
Staffa foro Ø 6 mm | *Bracket hole Ø 6 mm*

GILERA 50
PIAGGIO 50-100-125-150-250-300
R.O. CM071805-58093R



246070090

12V C.C. - Ø71/65
Staffa foro Ø 6 mm | *Bracket hole Ø 6 mm*

PIAGGIO 125-150-200-250-400
R.O. CM071806-58092R



246070100

12V C.A. - Ø71/65
Staffa foro Ø 4 mm | *Bracket hole Ø 4 mm*

PIAGGIO 50-125-150-200: Vespa PK 125 (Modello con avviamento elettrico - *Electric starter model*) • Ape 50 (Vari modelli - *Various models*)
R.O. CM071807-58144R



246070110

12V C.C. - Ø71/65
Staffa foro filettato Ø 6 mm | *Threaded bracket hole Ø 6 mm*

GILERA 50
PIAGGIO 50-100-125-150-250-400-500
R.O. 58094R-58131R-CM071802-CM071814



246070130

12V C.C.

PIAGGIO 220: Ape Car P2-P3 • Ape MP P501-P601 • Ape TM P602 • Ape TM P703-P703V
PIAGGIO 420: Ape Car-Max Diesel • Ape TM P703-P703V Diesel
R.O. 292695





AVVISATORI ACUSTICI

HORNS

246070140

6V C.A.
Modelli senza batteria | *No battery models*

PIAGGIO 125: Vespa 125 <82
V1T-V15T-V30T-V33T
R.O. 011635



246070150

6V C.A.
Modelli senza batteria | *No battery models*

PIAGGIO 125-150: Vespa 125-150 53-57
VM1-VM2-VUU1
R.O. 020250



246070160

6V C.A.
Modelli senza batteria | *No battery models*

PIAGGIO 150: Vespa 56-57
VL3-VB1
R.O. 025714



246070170

6V C.C.

PIAGGIO 150: Vespa 56-57
VL3-VB1
R.O. 025714B



246070180

6V C.A.
Modelli senza batteria | *No battery models*

PIAGGIO 50-90: Vespa 50-90 63-71
PIAGGIO 125: Vespa 125 61-63
V5A1-V5SS-V9A1-V9SS-VNB3-VNB4
R.O. 093753



246070190

6V C.A.
Modelli senza batteria | *No battery models*

PIAGGIO: Vespa 50 65-68
PIAGGIO 125-150: Vespa Super • Vespa Sprint 1° Serie • Vespa 150 63-65
VBB2
R.O. 097828



246070210

6V C.A.
Modelli senza batteria | *No battery models*

PIAGGIO 150: Vespa 150 59-66
VBA-VBB
R.O. 089840



246070220

6V C.A.
Modelli senza batteria | *No battery models*

PIAGGIO 150: Vespa GL • Vespa GS
VBA1T-VBB1T-VS2-VS3-VS4
R.O. 089840



246070230

6V C.A.

PIAGGIO 50: Ciao • Si • Bravo • Boxer
R.O. 122232





246070240

COPPIA CLACSON SUONO POTENTE 12V | *POWERFULL BLAST 12V HORN*
MOTOCICLI E SCOOTER | *MOTORCYCLE AND SCOOTER*
Dimensioni Ø 91 mm | *Dimensions: Ø 91 mm*
Omologazione CEE/ECE | *Homologations: CEE/ECE*





INTERRUTTORI

SWITCHES

246140540

INTERRUTTORE FRIZIONE | *CLUTCH SWITCH*

HONDA
R.O. 35330-413-003



246140600

INTERRUTTORE FRIZIONE | *CLUTCH SWITCH*
Per frizione idraulica | *For hydraulic clutch*

KAWASAKI
R.O. 270101406



246140660

INTERRUTTORE FRIZIONE | *CLUTCH SWITCH*

SUZUKI
R.O. 37560-38A00-000



246140670

INTERRUTTORE FRIZIONE | *CLUTCH SWITCH*
Per frizione idraulica | *For hydraulic clutch*

SUZUKI
R.O. 57560-02FA0-000



246140710

INTERRUTTORE FRIZIONE | *CLUTCH SWITCH*

YAMAHA
R.O. 3YX82917100



246140720

INTERRUTTORE FRIZIONE / FRENO POSTERIORE | *CLUTCH SWITCH / REAR BRAKE SWITCH*
Per frizione idraulica | *For hydraulic clutch*

YAMAHA
R.O. 36Y829170000



246140730 NEW

INTERRUTTORE RETROMARCIA | *REVERSE GEAR SWITCH*
Per modelli Ape TM | *For Ape TM models*

PIAGGIO
R.O. 252166



246140030

INTERRUTTORE STOP | *BRAKE LIGHT SWITCH*

MBK - YAMAHA
R.O. 5SEH253N0100 • NM5839801000



246140040

INTERRUTTORE STOP | *BRAKE LIGHT SWITCH*
Senza cavi | *Without cables*

MBK - YAMAHA
R.O. 5ADH39800100 • 5XLH39800000





246140050

INTERRUTTORE STOP | *BRAKE LIGHT SWITCH*

MALAGUTI
R.O. 01714000



246140070

INTERRUTTORE STOP | *BRAKE LIGHT SWITCH*

PIAGGIO
R.O. 055316



246140080

INTERRUTTORE STOP | *BRAKE LIGHT SWITCH*
Pulsante nero | *Black switch*

PIAGGIO
R.O. 181878



246140090

INTERRUTTORE STOP | *BRAKE LIGHT SWITCH*
Pulsante rosso | *Red switch*

PIAGGIO
R.O. 181881



246140100

INTERRUTTORE STOP | *BRAKE LIGHT SWITCH*
Interuttore Stop contatto a pulsante aperto | *Normally open*
Applicazione Varie | *Various applications*



246140110

INTERRUTTORE STOP | *BRAKE LIGHT SWITCH*

PIAGGIO
R.O. 181637



246140130

INTERRUTTORE STOP | *BRAKE LIGHT SWITCH*
Diametro esterno Ø13mm | *External diameter Ø13mm*

APRILIA
R.O. 642032 • 580953
DERBI
R.O. 580723 • AP8127305
GILERA
R.O. 580645 • 580953 • 642032
PIAGGIO
R.O. 580953



246140140

INTERRUTTORE STOP | *BRAKE LIGHT SWITCH*
Interruttore "a tirare" | *Pull switch type*
Per modelli Vespa fino al 1957 | *For Vespa models until 1957*

PIAGGIO
R.O. 610200M



246140150

INTERRUTTORE STOP | *BRAKE LIGHT SWITCH*
Interruttore "a rilascio" | *Release switch type*
Per modelli Vespa fino al 1957 | *For Vespa models until 1957*

PIAGGIO
R.O. 610201M





246140161

INTERRUTTORE STOP | *BRAKE LIGHT SWITCH*

PIAGGIO - GILERA
R.O. 583575



246140520

INTERRUTTORE STOP | *BRAKE LIGHT SWITCH*
Per leva freno posteriore | *For rear brake lever*

HONDA
R.O. 35340-329-003



246140530

INTERRUTTORE STOP | *BRAKE LIGHT SWITCH*
Per leva freno anteriore | *For front brake lever*

HONDA
R.O. 35340-MM5-600



246140550

INTERRUTTORE STOP | *BRAKE LIGHT SWITCH*
Per leva freno posteriore | *For rear brake lever*

HONDA
R.O. 35340-GS7-023



246140560

INTERRUTTORE STOP | *BRAKE LIGHT SWITCH*
Per leva freno anteriore | *For front brake lever*

HONDA
R.O. 35350-292-003



246140570

INTERRUTTORE STOP | *BRAKE LIGHT SWITCH*
Per leva freno anteriore | *For front brake lever*

KAWASAKI
R.O. 270101056



246140580

INTERRUTTORE STOP | *BRAKE LIGHT SWITCH*
Per leva freno posteriore | *For rear brake lever*

KAWASAKI
R.O. 270101019



246140610

INTERRUTTORE STOP | *BRAKE LIGHT SWITCH*
Per leva freno anteriore | *For front brake lever*
Per modelli Triumph con pompa freno non radiale | *For Triumph with non radial master cylinder models*

KAWASAKI
R.O. 270101170 • 270100025
SUZUKI
R.O. 57460-14J01-000
TRIUMPH



246140620

INTERRUTTORE STOP | *BRAKE LIGHT SWITCH*
Per leva freno posteriore | *For rear brake lever*
Tipo "LUCAS" | *"LUCAS" type*

TRIUMPH - BSA (LUCAS TYPE)





246140630

INTERRUTTORE STOP | *BRAKE LIGHT SWITCH*
Per leva freno posteriore | *For rear brake lever*
In metallo | *Made by metal*

PEUGEOT
R.O. 743154



246140640

INTERRUTTORE STOP | *BRAKE LIGHT SWITCH*
Per leva freno posteriore | *For rear brake lever*
In plastica | *Made by plastic*

PEUGEOT
R.O. 743154



246140650

INTERRUTTORE STOP | *BRAKE LIGHT SWITCH*
Per leva freno anteriore | *For front brake lever*

SUZUKI
R.O. 57460-17J01-000



246140680

INTERRUTTORE STOP | *BRAKE LIGHT SWITCH*
Per leva freno posteriore | *For rear brake lever*

YAMAHA
R.O. J45825030100



246140690

INTERRUTTORE STOP | *BRAKE LIGHT SWITCH*
Per leva freno anteriore | *For front brake lever*

YAMAHA
R.O. 3YF839800000 • 34X839800100 • 2U2839803000



246140700

INTERRUTTORE STOP | *BRAKE LIGHT SWITCH*
Per leva freno anteriore | *For front brake lever*

YAMAHA
R.O. 26H839800000 • 1A0839803000



246140170 NEW

INTERRUTTORE STOP | *BRAKE LIGHT SWITCH*

PIAGGIO
R.O. B023289



246140180 NEW

INTERRUTTORE STOP | *BRAKE LIGHT SWITCH*
Per modelli Ape Car, Mp P501-P601 | *For Ape Car, MP P501-P601 models*

PIAGGIO
R.O. 104412



246140190 NEW

INTERRUTTORE STOP | *BRAKE LIGHT SWITCH*
Interruttore stop idraulico. | *Hydraulic brake switch.*

MALAGUTI
R.O. 02102500
YAMAHA
R.O. 1D4H25500000





246140200 NEW

INTERRUTTORE STOP | *BRAKE LIGHT SWITCH*
Interruttore stop idraulico. | *Hydraulic brake switch.*

MOTO GUZZI
R.O. GU63657000



246140210 NEW

INTERRUTTORE STOP | *BRAKE LIGHT SWITCH*
Per modelli Porter | *For Piaggio Porter models*

PIAGGIO
R.O. 1D001075



246140500

PULSANTE CONSENSO AVVIAMENTO | *SWITCH START*
Per modelli Vespa N, Pk, Px, Pxe | *For Vespa models N, Pk, Px, Pxe*

PIAGGIO
R.O. 583330





246129000

5W
Di primo equipaggiamento | *OEM Quality*

KYMCO 125: Dink Eu3 06-07
KYMCO 250: B&W Eu2 03 • B&W 00 • Gran Dink Eu2 03-04 • Grand Dink 01-02 • People LC 03-04 • People S 06 • Yup 03
R.O. 00169731



246129010

Di primo equipaggiamento | *OEM Quality*

KYMCO 50: Agility 4T R10 04-08 • Agility R12 05-08 • Filly LX 01-02 • Vitality 4T 04 • Dink 4T 07
R.O. 00168591



246129030

50W - 7,5 Ω
Con connettori | *With connectors*



246129040

KYMCO 50: Agility 4T R16 08-12 • Agility RS 09 • Like 4T 09 • Super 8 4T 09 • Super 8 07
R.O. 00135001 - 35400-LEJ2-E10



246129050

KYMCO 125: Agility R16 08-12 • Like 09 • Super 8 08-09
KYMCO 150: Agility R16 08-09
R.O. 0135006 - 35400-LEJ3-E10





RELÈ

RELAYS

246120010

RELÈ FRECCE | *BLINKERS RELAYS*
12V 21W
3 terminali | *3 pins*

PIAGGIO
R.O. 163968 • 195703



246120011 NEW

GUILERA electronic smart solutions

RELÈ FRECCE | *BLINKERS RELAYS*
12V 21W
3 terminali | *3 pins*

PIAGGIO
R.O. 163968 • 195703



246120020

RELÈ FRECCE | *BLINKERS RELAYS*
Con avvisatore acustico | *With buzzer*
2 terminali | *2 pins*

MBK - YAMAHA
R.O. 5BRH33500200



246120030

RELÈ FRECCE | *BLINKERS RELAYS*
2 terminali | *2 pins*

MBK - YAMAHA
R.O. 5XWH33500000



246120060

RELÈ FRECCE | *BLINKERS RELAYS*
Con avvisatore acustico | *With buzzer*
2 terminali | *2 pins*

MBK - YAMAHA
R.O. 5XWH33500000



246120072

RELÈ FRECCE | *BLINKERS RELAYS*
Con avvisatore acustico | *With buzzer*
12V 10W x 2+3,4W

KYMCO
R.O. 00151708 • 00151016 • 00151515



246120082

RELÈ FRECCE | *BLINKERS RELAYS*
Con avvisatore acustico | *With buzzer*
2 terminali | *2 pins*

KYMCO
R.O. 00172377
SYM
R.O. 38301A31000



246120092

RELÈ FRECCE | *BLINKERS RELAYS*
Con avvisatore acustico | *With buzzer*

KYMCO
R.O. 00151701



246120102

RELÈ FRECCE | *BLINKERS RELAYS*
3 terminali | *3 pins*

KYMCO
R.O. 00169143 • 38300-LBC6-90A





246120112

RELÈ FRECCE | *BLINKERS RELAYS*
2 terminali | *2 pins*

MBK - YAMAHA
R.O. 1MHH3350V000



246120122

RELÈ FRECCE | *BLINKERS RELAYS*

KYMCO
R.O. 00138013



246120132

RELÈ FRECCE | *BLINKERS RELAYS*

KYMCO
R.O. 00151709



246120142

RELÈ FRECCE | *BLINKERS RELAYS*
12V 21W x 2+3,4W

SYM
R.O. 38301RFA000



246120152

RELÈ FRECCE | *BLINKERS RELAYS*
12V 10W x 2+3,4W

KYMCO
R.O. 00172193



246120162

RELÈ FRECCE | *BLINKERS RELAYS*

KYMCO
R.O. 00138023



246120173

RELÈ FRECCE | *BLINKERS RELAYS*
12V 21W

PIAGGIO
R.O. 231284



246400022

RELÈ AVVIAMENTO | *STARTER RELAYS*
12V 20A
4 terminali | *4 pins*

KYMCO
R.O. 00168795 • 00169208



246400012

RELÈ AVVIAMENTO | *STARTER RELAYS*
12V 100A

KYMCO
R.O. 00168997
MALAGUTI
R.O. 02503700





RELÈ

RELAYS

246400082

RELÈ AVVIAMENTO | *STARTER RELAYS*
con fusibili 30A | *with 30A fuses*

SUZUKI
R.O. 31800-21E20-000



246400052

RELÈ AVVIAMENTO | *STARTER RELAYS*
4 terminali | *4 pins*

KYMCO
R.O. 00169999 • 38500-KDK-900



246400093

RELÈ AVVIAMENTO | *STARTER RELAYS*
4 terminali | *4 pins*

PIAGGIO
R.O. 218824



246400143

RELÈ AVVIAMENTO | *STARTER RELAYS*
4 terminali | *4 pins*

PIAGGIO
R.O. 233707



246400111 NEW

RELÈ AVVIAMENTO | *STARTER RELAYS*
12V 80A
4 terminali | *4 pins*

PIAGGIO
R.O. 58115R



246400062

RELÈ FRECCE | *BLINKERS RELAYS*
4 terminali | *4 pins*

KYMCO
R.O. 00168930



246400100

RELÈ FRECCE | *BLINKERS RELAYS*
2 terminali | *2 pins*

PIAGGIO
R.O. 640289



246400072

RELÈ LUCI | *LIGHTS RELAYS*
5 terminali | *5 pins*

PIAGGIO
R.O. 58002R



246400032

RELÈ VENTOLA | *THERMAL RELAYS*
4 terminali | *4 pins*

KYMCO
R.O. 00139005 • 39100-LEA7-E00





246400042

RELÈ VENTOLA | *THERMAL RELAYS*
4 terminali | *4 pins*

KYMCO
R.O. 00139021 • 39100-KKE5-E01



246120180 NEW

GUILERA

RELÈ FRECCE | *BLINKERS RELAYS*
12V 10+10W/21+21W
3 terminali | *3 pins*

APRILIA - MOTO GUZZI
R.O. AP8127286



246120190 NEW

GUILERA

RELÈ FRECCE | *BLINKERS RELAYS*
12V 20W (2x10W)
Relè stato solido | *Solid state relè*
2 terminali | *2 pins*

DERBI - GILERA
R.O. 00G01700401



246120200 NEW

GUILERA

RELÈ FRECCE | *BLINKERS RELAYS*
12V 10+16W
3 terminali | *3 pins*

PIAGGIO
R.O. 1D001261



246120210 NEW

GUILERA

RELÈ FRECCE | *BLINKERS RELAYS*
12V 2x(4x2,3W)
3 terminali | *3 pins*

APRILIA
R.O. AP8127847



246120220 NEW

GUILERA

RELÈ FRECCE | *BLINKERS RELAYS*
12V 2 (4)x10W
8 terminali | *8 pins*

APRILIA - GILERA - PIAGGIO
R.O. 1D0013915



246120230 NEW

GUILERA

RELÈ FRECCE | *BLINKERS RELAYS*
12V 36W (2x18W)
2 terminali | *2 pins*

SUZUKI
R.O. 38610C01D10J000



246120240 NEW

GUILERA

RELÈ FRECCE | *BLINKERS RELAYS*
12V 10+21W+1,2W
2 terminali | *2 pins*

MBK - YAMAHA
R.O. 5DSH335000



246120250 NEW

GUILERA

RELÈ FRECCE | *BLINKERS RELAYS*
12v 12+16+1,2W
2 terminali | *2 pins*

MBK - YAMAHA
R.O. 5WXH335000





RELÈ

RELAYS

246120270 NEW

RELÈ FRECCE | *BLINKERS RELAYS*
12V 21+10W(X2)
8 terminali | *8 pins*
MBK - YAMAHA
R.O. 5SEH335001



246120280 NEW

RELÈ FRECCE | *BLINKERS RELAYS*
12V 2 (4)x10W
8 terminali | *8 pins*
MBK - YAMAHA
R.O. 1B9H335000



246120290 NEW

RELÈ FRECCE | *BLINKERS RELAYS*
6V monocanale
2 terminali | *2 pins*
PIAGGIO
R.O. 154578



246400150 NEW

RELÈ LUCI | *LIGHTS RELAYS*
12V 12W (2x6W)
2 terminali | *2 pins*
PIAGGIO
R.O. 680228



246400160 NEW

RELÈ LUCI | *LIGHTS RELAYS*

PIAGGIO
R.O. 643341



246400170 NEW

RELÈ AVVIAMENTO | *STARTER RELAYS*
12V 40A
4 terminali | *4 pins*
MBK - YAMAHA
R.O. 5SEH19510000



246400180 NEW

RELÈ AVVIAMENTO | *STARTER RELAYS*
12V 50A
4 terminali | *4 pins*
MBK - YAMAHA
R.O. 5RNH195000



246400190 NEW

RELÈ AVVIAMENTO | *STARTER RELAYS*
12V 30A
4 terminali | *4 pins*
MBK - YAMAHA
R.O. 5DSH195000





Modello *Model*	CC	Da *From*	A *To*	OEM	Codice RMS *RMS Code*	Tipologia *Type*
APRILIA						
Area 51	50	1998	2000	AP8212708	**100120360**	Interruttore termico | *Temperature switch*
Gulliver Lc	50	1996	1998	AP8212708	**100120360**	Interruttore termico | *Temperature switch*
Rally Liquid Cooled	50	1996	1999	AP8212708	**100120360**	Interruttore termico | *Temperature switch*
Sonic Gp	50	1998	2008	AP8212708	**100120360**	Interruttore termico | *Temperature switch*
Sr H2O Ditech E Carburatore	50	2000	2004	AP2BAA000067	**100120360**	Interruttore termico | *Temperature switch*
Sr Liquid Cooled	50	1994	1996	AP8212708	**100120360**	Interruttore termico | *Temperature switch*
Sr Stealth, Racing	50	1997	2000	AP8212708	**100120360**	Interruttore termico | *Temperature switch*
Atlantic	125	2003	2005	AP8127441	**100120420**	Interruttore termico | *Temperature switch*
Atlantic Eu3	125	2010	2012	AP8127441	**100120420**	Interruttore termico | *Temperature switch*
Atlantic Eu3 125-250	125	2006	2008	AP8127441	**100120420**	Interruttore termico | *Temperature switch*
Leonardo	125	1996	1997	AP8112939	**100120450**	Interruttore termico | *Temperature switch*
Leonardo	125	1997	1998	AP8112677	**100120430**	Interruttore termico | *Temperature switch*
Leonardo	125	1999	2002	AP8112677	**100120430**	Interruttore termico | *Temperature switch*
Leonardo St	125	2001	2004	AP8112677	**100120430**	Interruttore termico | *Temperature switch*
Mojito	125	2008	2008	581142	**100120060**	Sensore temperatura acqua | *Water temperature sensor*
Rs	125	1995	2010	AP8124487	**100120440**	Interruttore termico | *Temperature switch*
Rs	125	2006	2010	AP8127916	**100120060**	Sensore temperatura acqua | *Water temperature sensor*
Rx - Sx	125	2008	2010	AP8127916	**100120060**	Sensore temperatura acqua | *Water temperature sensor*
Scarabeo	125	2003	2006	AP8112939	**100120450**	Interruttore termico | *Temperature switch*
Scarabeo Light	125	2007	2008	AP8212708	**100120360**	Interruttore termico | *Temperature switch*
Scarabeo Motore Piaggio Eu3	125	2006	2006	AP8127441	**100120420**	Interruttore termico | *Temperature switch*
Scarabeo Motore Rotax	125	1999	2004	AP8112939	**100120450**	Interruttore termico | *Temperature switch*
Sport City	125	2004	2006	AP8127441	**100120420**	Interruttore termico | *Temperature switch*
Sport City Cube	125	2008	2010	AP8127441	**100120420**	Interruttore termico | *Temperature switch*
Sport City Euro3	125	2006	2008	AP8127441	**100120420**	Interruttore termico | *Temperature switch*
Sport City One 4T Euro3	125	2008	2011	581142	**100120060**	Sensore temperatura acqua | *Water temperature sensor*
Sport City Street	125	2012	2012	AP8127441	**100120420**	Interruttore termico | *Temperature switch*
Sr Motard	125	2012	2014	581142	**100120060**	Sensore temperatura acqua | *Water temperature sensor*
Tuareg Rally	125	1989	1992	AP8112417	**100120440**	Interruttore termico | *Temperature switch*
Tuono	125	2003	2004	AP8124487	**100120440**	Interruttore termico | *Temperature switch*
Leonardo	150	1997	1998	AP8112677	**100120430**	Interruttore termico | *Temperature switch*
Leonardo	250	1999	2004	AP8212708	**100120360**	Interruttore termico | *Temperature switch*
Leonardo St	250	2001	2001	AP8212708	**100120360**	Interruttore termico | *Temperature switch*
Rs	250	1998	2003	AP8212708	**100120360**	Interruttore termico | *Temperature switch*
Scarabeo	250	2004	2006	AP8127441	**100120420**	Interruttore termico | *Temperature switch*
Atlantic	500	2001	2004	AP8124936	**100121000**	Sensore temperatura aria | *Air temperature sensor*
Scarabeo	500	2003	2006	AP8124936	**100121000**	Sensore temperatura aria | *Air temperature sensor*
Moto' 6.5	650	1995	1999	AP8112677	**100120430**	Interruttore termico | *Temperature switch*
Pegaso	650	1992	1996	AP8112677	**100120430**	Interruttore termico | *Temperature switch*
Pegaso 3	650	1997	2000	AP8112677	**100120430**	Interruttore termico | *Temperature switch*
Pegaso Ie	650	2001	2004	AP8112939	**100120450**	Interruttore termico | *Temperature switch*
Shiver	750	2007	2016	AP8124936	**100121000**	Sensore temperatura aria | *Air temperature sensor*
Shiver Gt	750	2009	2009	AP8124936	**100121000**	Sensore temperatura aria | *Air temperature sensor*
Mana	850	2007	2011	AP8124936	**100121000**	Sensore temperatura aria | *Air temperature sensor*
Mana Gt	850	2009	2016	AP8124936	**100121000**	Sensore temperatura aria | *Air temperature sensor*
Srv - Srv Abs Atc	850	2012	2014	581142	**100120060**	Sensore temperatura acqua | *Water temperature sensor*
Shiver	900	2017	2017	AP8124936	**100121000**	Sensore temperatura aria | *Air temperature sensor*
Etv Capo Nord - Rally	1000	2001	2003	AP8124936	**100121000**	Sensore temperatura aria | *Air temperature sensor*
Etv Capo Nord Abs	1000	2004	2007	AP8124936	**100121000**	Sensore temperatura aria | *Air temperature sensor*
Rst Futura	1000	2001	2003	AP8124936	**100121000**	Sensore temperatura aria | *Air temperature sensor*
Rsv	1000	1998	1999	AP8112939	**100120450**	Interruttore termico | *Temperature switch*
Rsv R Tuono	1000	2002	2005	AP8112939	**100120450**	Interruttore termico | *Temperature switch*
Rsv Sp	1000	1999	2000	AP8112939	**100120450**	Interruttore termico | *Temperature switch*
Rsv, Rsv R	1000	2000	2003	AP8112939	**100120450**	Interruttore termico | *Temperature switch*
Sl Falco	1000	2000	2003	AP8112939	**100120450**	Interruttore termico | *Temperature switch*
DERBI						
Boulevard 4T Eu3	125	2008	2012	581142	**100120060**	Sensore temperatura acqua | *Water temperature sensor*
Gpr 4T	125	2009	2010	AP8212708	**100120360**	Interruttore termico | *Temperature switch*



Modello *Model*	**CC**	**Da** *From*	**A** *To*	**OEM**	**Codice RMS** *RMS Code*	**Tipologia** *Type*
Mulhacen 4T Eu3	125	2007	2010	AP8212708	**100120360**	Interruttore termico | *Temperature switch*
Rambla 125-250	125	2008	2009	AP8127441	**100120420**	Interruttore termico | *Temperature switch*
Rambla 125-250 E3 2Ver	125	2008	2008	AP8127441	**100120420**	Interruttore termico | *Temperature switch*
Senda Drd Motard	125	2013	2013	AP8212708	**100120360**	Interruttore termico | *Temperature switch*
Senda R-Sm Drd Racing 4T	125	2009	2009	AP8212708	**100120360**	Interruttore termico | *Temperature switch*
Sonar 4T	125	2009	2011	581142	**100120060**	Sensore temperatura acqua | *Water temperature sensor*
Terra 4T Eu3 - 4T Adventure	125	2007	2009	AP8212708	**100120360**	Interruttore termico | *Temperature switch*
Variant Sport 4T E3	125	2012	2012	581142	**100120060**	Sensore temperatura acqua | *Water temperature sensor*
Boulevard 4T E3	150	2010	2010	581142	**100120060**	Sensore temperatura acqua | *Water temperature sensor*
Sonar 4T	150	2009	2009	581142	**100120060**	Sensore temperatura acqua | *Water temperature sensor*
Rambla 125-250	250	2008	2009	AP8127441	**100120420**	Interruttore termico | *Temperature switch*
Rambla 125-250 E3 2Ver	250	2008	2008	AP8127441	**100120420**	Interruttore termico | *Temperature switch*
DUCATI						
Superbike 748	748	1995	2001	800053249	**100120370**	Interruttore termico | *Temperature switch*
Superbike 748 E	748	2001	2002	800053249	**100120370**	Interruttore termico | *Temperature switch*
Superbike 748 R	748	1999	1999	037093180	**100120350**	Interruttore termico | *Temperature switch*
Superbike 748 R Single-Seat	748	2000	2002	800053249	**100120370**	Interruttore termico | *Temperature switch*
Superbike 748 Rs	748	2000	2000	037093180	**100120350**	Interruttore termico | *Temperature switch*
Superbike 748 S	748	2000	2002	800053249	**100120370**	Interruttore termico | *Temperature switch*
Superbike 748 Sps	748	1998	1999	800053249	**100120370**	Interruttore termico | *Temperature switch*
Superbike 851	851	1991	1992	037093180	**100120350**	Interruttore termico | *Temperature switch*
Superbike 888	888	1994	1995	037093180	**100120350**	Interruttore termico | *Temperature switch*
Superbike 888 Sp5	888	1993	1993	037093180	**100120350**	Interruttore termico | *Temperature switch*
Superbike 888 Us	888	1994	1995	037093180	**100120350**	Interruttore termico | *Temperature switch*
Superbike 907 I.E.	900	1990	1993	037093180	**100120350**	Interruttore termico | *Temperature switch*
Supersport 900 Ss	900	1991	1997	037093180	**100120350**	Interruttore termico | *Temperature switch*
Supersport 900 Ss Final Ed.	900	1998	1998	037093180	**100120350**	Interruttore termico | *Temperature switch*
Superbike 916	916	1994	1997	800053249	**100120370**	Interruttore termico | *Temperature switch*
Superbike 916 Senna	916	1994	1998	800053249	**100120370**	Interruttore termico | *Temperature switch*
Superbike 916 Sp	916	1994	1996	800053249	**100120370**	Interruttore termico | *Temperature switch*
Superbike 916 R	996	1997	1998	037093180	**100120350**	Interruttore termico | *Temperature switch*
Superbike 916 Sps	996	1997	1998	800053249	**100120370**	Interruttore termico | *Temperature switch*
Superbike 996	996	1999	2001	800053249	**100120370**	Interruttore termico | *Temperature switch*
Superbike 996 R	996	2001	2001	800053249	**100120370**	Interruttore termico | *Temperature switch*
Superbike 996 R Ii	996	2001	2001	800053249	**100120370**	Interruttore termico | *Temperature switch*
Superbike 996 S	996	2001	2001	800053249	**100120370**	Interruttore termico | *Temperature switch*
Superbike 996 Sps	996	1999	2000	800053249	**100120370**	Interruttore termico | *Temperature switch*
Superbike 996 Sps Ii	996	1999	1999	800053249	**100120370**	Interruttore termico | *Temperature switch*
Superbike 996 Sps Iii	996	2000	2000	800053249	**100120370**	Interruttore termico | *Temperature switch*
Superbike 998	998	2002	2002	800053249	**100120370**	Interruttore termico | *Temperature switch*
Superbike 998	998	2003	2003	55210441A	**100120370**	Interruttore termico | *Temperature switch*
Superbike 998 Final Ed.	998	2004	2004	55210441A	**100120370**	Interruttore termico | *Temperature switch*
Superbike 998 Final Ed. Single	998	2004	2004	55210441A	**100120370**	Interruttore termico | *Temperature switch*
Superbike 998 Matrix	998	2004	2004	55210441A	**100120370**	Interruttore termico | *Temperature switch*
Superbike 998 Matrix Single-Se	998	2004	2004	55210441A	**100120370**	Interruttore termico | *Temperature switch*
Superbike 998 R	998	2002	2002	800053249	**100120370**	Interruttore termico | *Temperature switch*
Superbike 998 S Bayliss	998	2002	2002	800053249	**100120370**	Interruttore termico | *Temperature switch*
Superbike 998 S Bostrom	998	2002	2002	800053249	**100120370**	Interruttore termico | *Temperature switch*
GILERA						
Runner Fx-Fxr 125-180	125	1997	2002	293301	**100120460**	Interruttore termico | *Temperature switch*
Runner Vx-Vxr 125-180	125	2000	2001	293301	**100120460**	Interruttore termico | *Temperature switch*
Runner Vx-Vxr 125-200	125	2002	2004	293301	**100120460**	Interruttore termico | *Temperature switch*
Runner Fx-Fxr 125-180	180	1997	2002	293301	**100120460**	Interruttore termico | *Temperature switch*
Runner Vx-Vxr 125-180	180	2000	2001	293301	**100120460**	Interruttore termico | *Temperature switch*
Runner Vx-Vxr 125-200	200	2002	2004	293301	**100120460**	Interruttore termico | *Temperature switch*
Fuoco 4T-4V Ie E3 Lt	500	2013	2014	581142	**100120060**	Sensore temperatura acqua | *Water temperature sensor*
Fuoco Euro3	500	2007	2013	581142	**100120060**	Sensore temperatura acqua | *Water temperature sensor*
Gp	800	2007	2011	581142	**100120060**	Sensore temperatura acqua | *Water temperature sensor*
Gp Centenario	800	2009	2009	581142	**100120060**	Sensore temperatura acqua | *Water temperature sensor*



Modello *Model*	CC	Da *From*	A *To*	OEM	Codice RMS *RMS Code*	Tipologia *Type*
HARLEY DAVIDSON						
Xl 883 C Sportster Custom	883	2007	2010	32319-07	**100120130**	Sensore MAP | *Map sensor*
Xl 883 C Sportster Custom	883	2007	2010	27629-01A	**100120110**	Sensore TPS | *TPS Sensor*
Xl 883 L Sportster Low	883	2007	2010	32319-07	**100120130**	Sensore MAP | *Map sensor*
Xl 883 L Sportster Low	883	2007	2010	27629-01A	**100120110**	Sensore TPS | *TPS Sensor*
Xl 883 L Sportster Super Low	883	2011	2014	32319-07	**100120130**	Sensore MAP | *Map sensor*
Xl 883 L Sportster Super Low	883	2011	2014	27629-01A	**100120110**	Sensore TPS | *TPS Sensor*
Xl 883 L Sportster Super Low Abs	883	2015	2017	32319-07	**100120130**	Sensore MAP | *Map sensor*
Xl 883 N Sportster Iron	883	2009	2014	32319-07	**100120130**	Sensore MAP | *Map sensor*
Xl 883 N Sportster Iron	883	2009	2014	27629-01A	**100120110**	Sensore TPS | *TPS Sensor*
Xl 883 N Sportster Iron Abs	883	2014	2017	32319-07	**100120130**	Sensore MAP | *Map sensor*
Xl 883 R Sportster Roadster	883	2007	2012	27629-01A	**100120110**	Sensore TPS | *TPS Sensor*
Xl 883 R Sportster Roadster	883	2007	2014	32319-07	**100120130**	Sensore MAP | *Map sensor*
Xl 883 R Sportster Roadster Abs	883	2015	2015	32319-07	**100120130**	Sensore MAP | *Map sensor*
Xl 883 Sportster	883	2007	2009	32319-07	**100120130**	Sensore MAP | *Map sensor*
Vrsca 1130 V-Rod	1130	2006	2006	32316-99	**100120150**	Sensore MAP | *Map sensor*
Vrscaw 1130 V-Rod	1130	2007	2007	32316-99	**100120150**	Sensore MAP | *Map sensor*
Vrscd 1130 Night Rod	1130	2006	2007	32316-99	**100120150**	Sensore MAP | *Map sensor*
Vrscdx 1130 Night Rod Special	1130	2007	2007	32316-99	**100120150**	Sensore MAP | *Map sensor*
Vrscr 1130 Street-Rod	1130	2006	2007	32316-99	**100120150**	Sensore MAP | *Map sensor*
Xl 1200 C Sportster Custom	1200	2007	2010	27629-01A	**100120110**	Sensore TPS | *TPS Sensor*
Xl 1200 C Sportster Custom	1200	2007	2014	32319-07	**100120130**	Sensore MAP | *Map sensor*
Xl 1200 C Sportster Custom	1200	2012	2014	27629-01A	**100120110**	Sensore TPS | *TPS Sensor*
Xl 1200 C Sportster Custom Abs	1200	2015	2017	32319-07	**100120130**	Sensore MAP | *Map sensor*
Xl 1200 Ca Sportster Custom Limited Edition	1200	2013	2015	27629-01A	**100120110**	Sensore TPS | *TPS Sensor*
Xl 1200 Ca Sportster Custom Limited Edition	1200	2013	2016	32319-07	**100120130**	Sensore MAP | *Map sensor*
Xl 1200 Cb Sportster Custom Limited Edition	1200	2013	2017	32319-07	**100120130**	Sensore MAP | *Map sensor*
Xl 1200 Cb Sportster Custom Limited Edition	1200	2014	2014	32319-07	**100120130**	Sensore MAP | *Map sensor*
Xl 1200 Cb Sportster Custom Limited Edition	1200	2014	2015	27629-01A	**100120110**	Sensore TPS | *TPS Sensor*
Xl 1200 Cx Sportster Roadster Abs	1200	2016	2017	32319-07	**100120130**	Sensore MAP | *Map sensor*
Xl 1200 L Sportster Low	1200	2007	2009	32319-07	**100120130**	Sensore MAP | *Map sensor*
Xl 1200 L Sportster Low	1200	2007	2009	27629-01A	**100120110**	Sensore TPS | *TPS Sensor*
Xl 1200 N Sportster Nightster	1200	2008	2012	32319-07	**100120130**	Sensore MAP | *Map sensor*
Xl 1200 R Sportster Roadster	1200	2007	2008	32319-07	**100120130**	Sensore MAP | *Map sensor*
Xl 1200 T Sportster Superlow Abs	1200	2014	2017	32319-07	**100120130**	Sensore MAP | *Map sensor*
Xl 1200 T Sportster Superlow Abs	1200	2015	2015	27629-01A	**100120110**	Sensore TPS | *TPS Sensor*
Xl 1200 V Sportster Seventy-Two	1200	2013	2014	32319-07	**100120130**	Sensore MAP | *Map sensor*
Xl 1200 V Sportster Seventy-Two	1200	2013	2014	27629-01A	**100120110**	Sensore TPS | *TPS Sensor*
Xl 1200 V Sportster Seventy-Two Abs	1200	2015	2015	27629-01A	**100120110**	Sensore TPS | *TPS Sensor*
Xl 1200 V Sportster Seventy-Two Abs	1200	2015	2016	32319-07	**100120130**	Sensore MAP | *Map sensor*
Xl 1200 X Sportster Forty Eight	1200	2010	2014	32319-07	**100120130**	Sensore MAP | *Map sensor*
Xl 1200 X Sportster Forty Eight	1200	2011	2014	27629-01A	**100120110**	Sensore TPS | *TPS Sensor*
Xl 1200 X Sportster Forty Eight Abs	1200	2015	2017	32319-07	**100120130**	Sensore MAP | *Map sensor*
Xl-Anv 1200 C Sportster Custom Anniversary	1200	2013	2013	27629-01A	**100120110**	Sensore TPS | *TPS Sensor*
Vrscaw 1250 V-Rod	1250	2008	2008	32316-99	**100120150**	Sensore MAP | *Map sensor*
Vrscaw 1250 V-Rod Abs	1250	2009	2009	32316-99	**100120150**	Sensore MAP | *Map sensor*
Vrscawa 1250 V-Rod Abs	1250	2008	2008	32316-99	**100120150**	Sensore MAP | *Map sensor*
Vrscdx 1250 Night Rod Special	1250	2008	2008	32316-99	**100120150**	Sensore MAP | *Map sensor*
Vrscdx 1250 Night Rod Special Abs	1250	2009	2009	32316-99	**100120150**	Sensore MAP | *Map sensor*
Vrscf 1250 V-Rod Muscle Abs	1250	2009	2009	32316-99	**100120150**	Sensore MAP | *Map sensor*
Vrscse 1250 Cvo V-Rod Screamin Eagle	1250	2006	2006	32316-99	**100120150**	Sensore MAP | *Map sensor*
Vrscx 1250 Cvo V-Rod Screamin Eagle	1250	2007	2007	32316-99	**100120150**	Sensore MAP | *Map sensor*
Flhri 1340 Efi Electra Glide Road King	1340	1996	1998	32424-95	**100120140**	Sensore MAP | *Map sensor*
Flhtci 1340 Efi Electra Glide Classic	1340	1996	1998	32424-95	**100120140**	Sensore MAP | *Map sensor*
Flhtcui 1340 Efi Electra Glide Ultra Classic	1340	1996	1998	32424-95	**100120140**	Sensore MAP | *Map sensor*
Flstci 1450 Efi Heritage Softail Classic	1450	2001	2005	27629-01A	**100120110**	Sensore TPS | *TPS Sensor*
Flstfi 1450 Efi Fat Boy	1450	2001	2005	27629-01A	**100120110**	Sensore TPS | *TPS Sensor*
Flstni 1450 Efi Softail Deluxe	1450	2005	2005	27629-01A	**100120110**	Sensore TPS | *TPS Sensor*
Fxdci 1450 Efi Dyna Super Glide Custom	1450	2005	2005	27629-01A	**100120110**	Sensore TPS | *TPS Sensor*



Modello *Model*	**CC**	**Da** *From*	**A** *To*	**OEM**	**Codice RMS** *RMS Code*	**Tipologia** *Type*
Fxdi 1450 Efi Dyna Super Glide	1450	2004	2005	27629-01A	**100120110**	Sensore TPS | *TPS Sensor*
Fxdli 1450 Efi Dyna Low Rider	1450	2004	2005	27629-01A	**100120110**	Sensore TPS | *TPS Sensor*
Fxdwgi 1450 Efi Dyna Wide Glide	1450	2004	2005	27629-01A	**100120110**	Sensore TPS | *TPS Sensor*
Fxdxi 1450 Efi Dyna Super Glide Sport	1450	2004	2005	27629-01A	**100120110**	Sensore TPS | *TPS Sensor*
Fxst 1450 Softail Standard	1450	2001	2003	27629-01A	**100120110**	Sensore TPS | *TPS Sensor*
Fxstb 1450 Night Train	1450	2001	2004	27629-01A	**100120110**	Sensore TPS | *TPS Sensor*
Fxstbi 1450 Efi Night Train	1450	2004	2005	27629-01A	**100120110**	Sensore TPS | *TPS Sensor*
Fxstdi 1450 Efi Softail Deuce	1450	2001	2005	27629-01A	**100120110**	Sensore TPS | *TPS Sensor*
Fxsti 1450 Efi Softail Standard	1450	2004	2005	27629-01A	**100120110**	Sensore TPS | *TPS Sensor*
Fxsts 1450 Softail Springer	1450	2001	2003	27629-01A	**100120110**	Sensore TPS | *TPS Sensor*
Fxstsi 1450 Efi Softail Springer	1450	2004	2004	27629-01A	**100120110**	Sensore TPS | *TPS Sensor*
Flhr 1584 Road King	1584	2007	2007	32316-99	**100120150**	Sensore MAP | *Map sensor*
Flhr 1584 Road King	1584	2008	2008	32319-07	**100120130**	Sensore MAP | *Map sensor*
Flhr 1584 Road King Abs	1584	2008	2009	32319-07	**100120130**	Sensore MAP | *Map sensor*
Flhrc 1584 Road King Classic	1584	2008	2010	32319-07	**100120130**	Sensore MAP | *Map sensor*
Flhrc 1584 Road King Classic Abs	1584	2008	2011	32319-07	**100120130**	Sensore MAP | *Map sensor*
Flhrs 1584 Road King Custom	1584	2007	2007	32316-99	**100120150**	Sensore MAP | *Map sensor*
Flht 1584 Electra Glide Standard	1584	2007	2007	32316-99	**100120150**	Sensore MAP | *Map sensor*
Flht 1584 Electra Glide Standard Abs	1584	2008	2009	32319-07	**100120130**	Sensore MAP | *Map sensor*
Flhtcu 1584 Ultra Classic Electra Glide Abs	1584	2008	2010	32319-07	**100120130**	Sensore MAP | *Map sensor*
Flhtcutg 1584 Tri Glide Ultra Classic Trike	1584	2009	2011	32319-07	**100120130**	Sensore MAP | *Map sensor*
Flhtcutg 1584 Tri Glide Ultra Classic Trike	1584	2013	2013	32319-07	**100120130**	Sensore MAP | *Map sensor*
Flhx 1584 Street Glide	1584	2007	2007	32316-99	**100120150**	Sensore MAP | *Map sensor*
Flhx 1584 Street Glide	1584	2008	2008	32319-07	**100120130**	Sensore MAP | *Map sensor*
Flhx 1584 Street Glide	1584	2010	2010	32319-07	**100120130**	Sensore MAP | *Map sensor*
Flhx 1584 Street Glide Abs	1584	2008	2009	32319-07	**100120130**	Sensore MAP | *Map sensor*
Flstc 1584 Heritage Softail Classic	1584	2007	2008	32316-99	**100120150**	Sensore MAP | *Map sensor*
Flstc 1584 Heritage Softail Classic	1584	2007	2010	27659-05	**100120120**	Sensore TPS | *TPS Sensor*
Flstc 1584 Heritage Softail Classic Abs	1584	2011	2011	27659-05	**100120120**	Sensore TPS | *TPS Sensor*
Flstf 1584 Softail Fat Boy	1584	2007	2008	32316-99	**100120150**	Sensore MAP | *Map sensor*
Flstf 1584 Softail Fat Boy	1584	2007	2010	27659-05	**100120120**	Sensore TPS | *TPS Sensor*
Flstf 1584 Softail Fat Boy Abs	1584	2011	2011	27659-05	**100120120**	Sensore TPS | *TPS Sensor*
Flstfb 1584 Softail Fat Boy Special	1584	2010	2010	27659-05	**100120120**	Sensore TPS | *TPS Sensor*
Flstfb 1584 Softail Fat Boy Special Abs	1584	2011	2011	27659-05	**100120120**	Sensore TPS | *TPS Sensor*
Flstn 1584 Softail Deluxe	1584	2007	2008	32316-99	**100120150**	Sensore MAP | *Map sensor*
Flstn 1584 Softail Deluxe	1584	2007	2008	27659-05	**100120120**	Sensore TPS | *TPS Sensor*
Flstn 1584 Softail Deluxe Abs	1584	2011	2011	27659-05	**100120120**	Sensore TPS | *TPS Sensor*
Flstsb 1584 Softail Cross Bones	1584	2008	2011	27659-05	**100120120**	Sensore TPS | *TPS Sensor*
Flstsc 1584 Softail Springer Classic	1584	2007	2007	32316-99	**100120150**	Sensore MAP | *Map sensor*
Fxcwc 1584 C Softail Rocker C	1584	2008	2010	27659-05	**100120120**	Sensore TPS | *TPS Sensor*
Fxcwc 1584 C Softail Rocker C Abs	1584	2011	2011	27659-05	**100120120**	Sensore TPS | *TPS Sensor*
Fxdb 1584 Dyna Street Bob	1584	2007	2009	32316-99	**100120150**	Sensore MAP | *Map sensor*
Fxdb 1584 Dyna Street Bob	1584	2007	2013	27659-05	**100120120**	Sensore TPS | *TPS Sensor*
Fxdb 1584 Dyna Street Bob Abs	1584	2012	2013	27659-05	**100120120**	Sensore TPS | *TPS Sensor*
Fxdc 1584 Dyna Super Glide Custom	1584	2007	2009	32316-99	**100120150**	Sensore MAP | *Map sensor*
Fxdc 1584 Dyna Super Glide Custom	1584	2007	2011	27659-05	**100120120**	Sensore TPS | *TPS Sensor*
Fxdc 1584 Dyna Super Glide Custom Abs	1584	2012	2013	27659-05	**100120120**	Sensore TPS | *TPS Sensor*
Fxdf 1584 Dyna Fat Bob	1584	2008	2009	32316-99	**100120150**	Sensore MAP | *Map sensor*
Fxdf 1584 Dyna Fat Bob	1584	2008	2011	27659-05	**100120120**	Sensore TPS | *TPS Sensor*
Fxdf 1584 Dyna Fat Bob Abs	1584	2012	2012	27659-05	**100120120**	Sensore TPS | *TPS Sensor*
Fxdl 1584 Dyna Low Rider	1584	2007	2008	32316-99	**100120150**	Sensore MAP | *Map sensor*
Fxdl 1584 Dyna Low Rider	1584	2007	2008	27659-05	**100120120**	Sensore TPS | *TPS Sensor*
Fxdwg 1584 Dyna Wide Glide	1584	2007	2007	27659-05	**100120120**	Sensore TPS | *TPS Sensor*
Fxdwg 1584 Dyna Wide Glide	1584	2007	2008	32316-99	**100120150**	Sensore MAP | *Map sensor*
Fxdwg 1584 Dyna Wide Glide	1584	2010	2011	27659-05	**100120120**	Sensore TPS | *TPS Sensor*
Fxdwg 1584 Dyna Wide Glide Abs	1584	2012	2012	27659-05	**100120120**	Sensore TPS | *TPS Sensor*
Fxs 1584 Softail Blackline	1584	2011	2011	27659-05	**100120120**	Sensore TPS | *TPS Sensor*
Fxs 1584 Softail Blackline Abs	1584	2012	2012	27659-05	**100120120**	Sensore TPS | *TPS Sensor*
Fxstb 1584 Softail Night Train	1584	2007	2008	32316-99	**100120150**	Sensore MAP | *Map sensor*



Modello *Model*	CC	Da *From*	A *To*	OEM	Codice RMS *RMS Code*	Tipologia *Type*
Fxstb 1584 Softail Night Train	1584	2007	2009	27659-05	**100120120**	Sensore TPS | *TPS Sensor*
Fxstc 1584 Softail Custom	1584	2007	2008	32316-99	**100120150**	Sensore MAP | *Map sensor*
Fxstc 1584 Softail Custom	1584	2007	2009	27659-05	**100120120**	Sensore TPS | *TPS Sensor*
Fld 1690 Dyna Switchback Abs	1690	2012	2016	27659-05	**100120120**	Sensore TPS | *TPS Sensor*
Flhr 1690 Road King Abs	1690	2016	2016	32319-07	**100120130**	Sensore MAP | *Map sensor*
Flhrc 1690 Road King Classic Abs	1690	2011	2015	32319-07	**100120130**	Sensore MAP | *Map sensor*
Flhtcu 1690 Electra Glide Ultra Classic Abs	1690	2012	2016	32319-07	**100120130**	Sensore MAP | *Map sensor*
Flhtcutg 1690 Tri Glide Ultra	1690	2014	2016	32319-07	**100120130**	Sensore MAP | *Map sensor*
Flhtcutg 1690 Tri Glide Ultra Classic Trike	1690	2012	2012	32319-07	**100120130**	Sensore MAP | *Map sensor*
Flhtk 1690 Electra Glide Limited Abs	1690	2013	2016	32319-07	**100120130**	Sensore MAP | *Map sensor*
Flhtk 1690 Electra Glide Ultra Limited Abs	1690	2010	2012	32319-07	**100120130**	Sensore MAP | *Map sensor*
Flhx 1690 Street Glide Abs	1690	2011	2014	32319-07	**100120130**	Sensore MAP | *Map sensor*
Fls 1690 Softail Slim Abs	1690	2016	2017	32319-07	**100120130**	Sensore MAP | *Map sensor*
Flstc 1690 Heritage Softail Classic	1690	2013	2013	27659-05	**100120120**	Sensore TPS | *TPS Sensor*
Flstc 1690 Heritage Softail Classic	1690	2015	2015	27659-05	**100120120**	Sensore TPS | *TPS Sensor*
Flstc 1690 Heritage Softail Classic Abs	1690	2016	2017	32319-07	**100120130**	Sensore MAP | *Map sensor*
Flstc 1690 Heritage Softail Springer	1690	2012	2012	27659-05	**100120120**	Sensore TPS | *TPS Sensor*
Flstc 1690 Heritage Softail Springer	1690	2014	2014	27659-05	**100120120**	Sensore TPS | *TPS Sensor*
Flstf 1690 Softail Fat Boy Abs	1690	2012	2015	27659-05	**100120120**	Sensore TPS | *TPS Sensor*
Flstf 1690 Softail Fat Boy Abs	1690	2016	2017	32319-07	**100120130**	Sensore MAP | *Map sensor*
Flstfb 1690 Softail Fat Boy Special Abs	1690	2012	2015	27659-05	**100120120**	Sensore TPS | *TPS Sensor*
Flstfb 1690 Softail Fat Boy Special Abs	1690	2016	2016	32319-07	**100120130**	Sensore MAP | *Map sensor*
Flstn 1690 Softail Deluxe Abs	1690	2012	2015	27659-05	**100120120**	Sensore TPS | *TPS Sensor*
Flstn 1690 Softail Deluxe Abs	1690	2016	2017	32319-07	**100120130**	Sensore MAP | *Map sensor*
Fltrxs 1690 Road Glide Special Abs	1690	2015	2016	32319-07	**100120130**	Sensore MAP | *Map sensor*
Fxdb 1690 Dyna Street Bob Abs	1690	2014	2017	27659-05	**100120120**	Sensore TPS | *TPS Sensor*
Fxdc 1690 Dyna Super Glide Custom Abs	1690	2014	2014	27659-05	**100120120**	Sensore TPS | *TPS Sensor*
Fxdf 1690 Dyna Fat Bob Abs	1690	2013	2017	27659-05	**100120120**	Sensore TPS | *TPS Sensor*
Fxdl 1690 Dyna Low Rider Abs	1690	2015	2017	27659-05	**100120120**	Sensore TPS | *TPS Sensor*
Fxdwg 1690 Dyna Wide Glide Abs	1690	2013	2017	27659-05	**100120120**	Sensore TPS | *TPS Sensor*
Flhtcuse3 1800 Cvo Screamin Eagle Ultra Classic Electra Glide Abs	1800	2008	2008	32319-07	**100120130**	Sensore MAP | *Map sensor*
Flhtcuse4 1800 Cvo Screamin Eagle Ultra Classic Electra Glide Abs	1800	2009	2009	32319-07	**100120130**	Sensore MAP | *Map sensor*
Flhtcuse5 1800 Cvo Screamin Eagle Ultra Classic Electra Glide Abs	1800	2010	2010	32319-07	**100120130**	Sensore MAP | *Map sensor*
Flhtcuse6 1800 Cvo Screamin Eagle Ultra Classic Electra Glide Abs	1800	2011	2011	32319-07	**100120130**	Sensore MAP | *Map sensor*
Flhtcuse7 1800 Cvo Screamin Eagle Ultra Classic Electra Glide Abs	1800	2012	2012	32319-07	**100120130**	Sensore MAP | *Map sensor*
Flhtcuse8 1800 Cvo Ultra Classic Electra	1800	2013	2013	32319-07	**100120130**	Sensore MAP | *Map sensor*
Flhxse 1800 Cvo Screamin Eagle Street Glide	1800	2010	2010	32319-07	**100120130**	Sensore MAP | *Map sensor*
Flhxse 1800 Cvo Street Glide Abs	1800	2015	2016	32319-07	**100120130**	Sensore MAP | *Map sensor*
Flhxse2 1800 Cvo Screamin Eagle Street Glide Abs	1800	2011	2011	32319-07	**100120130**	Sensore MAP | *Map sensor*
Flhxse3 1800 Cvo Screamin Eagle Street Glide Abs	1800	2012	2012	32319-07	**100120130**	Sensore MAP | *Map sensor*
Flss 1800 S Softail Slim S Abs	1800	2016	2017	32319-07	**100120130**	Sensore MAP | *Map sensor*
Flstfbs 1800 S Softail Fat Boy Special S Abs	1800	2016	2017	32319-07	**100120130**	Sensore MAP | *Map sensor*
Fltrse3 1800 Cvo Screamin Eagle Road Glide	1800	2009	2009	32319-07	**100120130**	Sensore MAP | *Map sensor*
Fltrxse 1800 Cvo Screamin Eagle Road Glide	1800	2012	2012	32319-07	**100120130**	Sensore MAP | *Map sensor*
HM-MOTO/VENT-MOTO						
Cre F 250 X	250	2007	2010	-	**100120100**	Interruttore termico | *Temperature switch*
Cre F 250 X Ie	250	2007	2008	-	**100120100**	Interruttore termico | *Temperature switch*
Cre F 290 X Ie	290	2007	2008	-	**100120100**	Interruttore termico | *Temperature switch*
Cre F 300 X	300	2008	2010	-	**100120100**	Interruttore termico | *Temperature switch*
HONDA						
Nsr 50 S	50	1989	1996	37750-PC1-004	**100120160**	Sensore temperatura | *Temperature sensor*
Mbx 80 Sw	80	1982	1983	37750-PC1-004	**100120160**	Sensore temperatura | *Temperature sensor*
Mbx 80 Sw2	80	1982	1987	37750-PC1-004	**100120160**	Sensore temperatura | *Temperature sensor*
Mbx 80 Swd	80	1982	1987	37750-PC1-004	**100120160**	Sensore temperatura | *Temperature sensor*
Mtx 80 R2	80	1987	1987	37750-PC1-004	**100120160**	Sensore temperatura | *Temperature sensor*



SENSORI / TERMOSTATI

SENSORS / THERMOSTATS

Modello *Model*	**CC**	**Da** *From*	**A** *To*	**OEM**	**Codice RMS** *RMS Code*	**Tipologia** *Type*
Mtx 80 Rs	80	1983	1985	37750-PC1-004	**100120160**	Sensore temperatura | *Temperature sensor*
Cbr 125 R	125	2004	2005	37760-MT2-003	**100120100**	Interruttore termico | *Temperature switch*
Cbr 125 Rs Repsol	125	2005	2007	37760-MT2-003	**100120100**	Interruttore termico | *Temperature switch*
Cbr 125 Rw	125	2005	2006	37760-MT2-003	**100120100**	Interruttore termico | *Temperature switch*
Ch 125 Spacy	125	1996	1999	37750-PC1-004	**100120160**	Sensore temperatura | *Temperature sensor*
Fes 125 Pantheon	125	1998	2002	37760-MT2-003	**100120100**	Interruttore termico | *Temperature switch*
Fes 125 Pantheon	125	1998	2002	37750-PC1-004	**100120160**	Sensore temperatura | *Temperature sensor*
Nes 125 @/ Arobase	125	2000	2002	37760-MT2-003	**100120100**	Interruttore termico | *Temperature switch*
Nsr 125 R	125	1998	2003	37750-PC1-004	**100120160**	Sensore temperatura | *Temperature sensor*
Nsr 125 R 80 Km/H	125	1997	2003	37750-PC1-004	**100120160**	Sensore temperatura | *Temperature sensor*
Ses 125 Dylan	125	2002	2006	37760-MT2-003	**100120100**	Interruttore termico | *Temperature switch*
Vt 125 C Shadow	125	1999	2008	37760-MT2-003	**100120100**	Interruttore termico | *Temperature switch*
Vt 125 C Shadow 80 Km/H	125	1999	2005	37760-MT2-003	**100120100**	Interruttore termico | *Temperature switch*
Vt 125 C2 Shadow	125	2000	2002	37760-MT2-003	**100120100**	Interruttore termico | *Temperature switch*
Vt 125 C2 Shadow 80 Km/H	125	2000	2002	37760-MT2-003	**100120100**	Interruttore termico | *Temperature switch*
Xl 125 V Varadero	125	2001	2006	37760-MT2-003	**100120100**	Interruttore termico | *Temperature switch*
Xl 125 V Varadero 80 Km/H	125	2001	2006	37760-MT2-003	**100120100**	Interruttore termico | *Temperature switch*
Nes 150 @/ Arobase	150	2000	2006	37760-MT2-003	**100120100**	Interruttore termico | *Temperature switch*
Mtx 200 Rw	200	1983	1988	37750-PC1-004	**100120160**	Sensore temperatura | *Temperature sensor*
Cn 250 Helix	250	1986	1990	37750-PC1-004	**100120160**	Sensore temperatura | *Temperature sensor*
Cn 250 Helix Spazio	250	1991	1999	37750-PC1-004	**100120160**	Sensore temperatura | *Temperature sensor*
Crf 250 R	250	2004	2007	37760-MT2-003	**100120100**	Interruttore termico | *Temperature switch*
Crf 250 X	250	2004	2007	37760-MT2-003	**100120100**	Interruttore termico | *Temperature switch*
Fes 250 Foresight	250	1998	2000	37760-MT2-003	**100120100**	Interruttore termico | *Temperature switch*
Fes 250 Foresight	250	1998	2000	37750-PC1-004	**100120160**	Sensore temperatura | *Temperature sensor*
Nss 250 A Jazz Abs	250	2001	2004	37760-MT2-003	**100120100**	Interruttore termico | *Temperature switch*
Nss 250 Jazz	250	2001	2001	37760-MT2-003	**100120100**	Interruttore termico | *Temperature switch*
Nx 250	250	1988	1995	37760-MT2-003	**100120100**	Interruttore termico | *Temperature switch*
Nx 250	250	1988	1995	37750-PC1-004	**100120160**	Sensore temperatura | *Temperature sensor*
Vtr 250	250	2009	2011	19300-KE8-000	**100120300**	Termostato | *Thermostat*
Cb-1 400 F	400	1989	1990	37760-MT2-003	**100120100**	Interruttore termico | *Temperature switch*
Vfr 400 R	400	1989	1989	37760-MT2-003	**100120100**	Interruttore termico | *Temperature switch*
Vfr 400 R	400	1989	1989	37750-PC1-004	**100120160**	Sensore temperatura | *Temperature sensor*
Vfr 400 Riii	400	1990	1991	37760-MT2-003	**100120100**	Interruttore termico | *Temperature switch*
Vfr 400 Riii	400	1990	1991	37750-PC1-004	**100120160**	Sensore temperatura | *Temperature sensor*
Cb 500	500	1994	2003	37760-MT2-003	**100120100**	Interruttore termico | *Temperature switch*
Cb 500	500	1994	2003	37750-PC1-004	**100120160**	Sensore temperatura | *Temperature sensor*
Cb 500	500	1994	2003	19300-KE8-000	**100120300**	Termostato | *Thermostat*
Cb 500 S Sport	500	1998	2003	37760-MT2-003	**100120100**	Interruttore termico | *Temperature switch*
Cb 500 S Sport	500	1998	2003	37750-PC1-004	**100120160**	Sensore temperatura | *Temperature sensor*
Cb 500 S Sport	500	1998	2003	19300-KE8-000	**100120300**	Termostato | *Thermostat*
Cbf 500	500	2004	2008	37760-MT2-003	**100120100**	Interruttore termico | *Temperature switch*
Cbf 500	500	2004	2008	37750-PC1-004	**100120160**	Sensore temperatura | *Temperature sensor*
Cbf 500 A Abs	500	2004	2008	37760-MT2-003	**100120100**	Interruttore termico | *Temperature switch*
Cbf 500 A Abs	500	2004	2008	37750-PC1-004	**100120160**	Sensore temperatura | *Temperature sensor*
Vt 500 C Shadow	500	1983	1984	19300-KE8-000	**100120300**	Termostato | *Thermostat*
Vt 500 E	500	1983	1985	37750-PC1-004	**100120160**	Sensore temperatura | *Temperature sensor*
Vt 500 E	500	1983	1985	19300-KE8-000	**100120300**	Termostato | *Thermostat*
Vt 500 E	500	1985	1985	37760-MT2-003	**100120100**	Interruttore termico | *Temperature switch*
Cb 600 F Hornet	600	1998	2002	37750-PC1-004	**100120160**	Sensore temperatura | *Temperature sensor*
Cb 600 F Hornet	600	1998	2006	37760-MT2-003	**100120100**	Interruttore termico | *Temperature switch*
Cb 600 S F2 Hornet S	600	2000	2003	37760-MT2-003	**100120100**	Interruttore termico | *Temperature switch*
Cb 600 S F2 Hornet S	600	2000	2003	37750-PC1-004	**100120160**	Sensore temperatura | *Temperature sensor*
Cbf 600 N	600	2004	2007	37760-MT2-003	**100120100**	Interruttore termico | *Temperature switch*
Cbf 600 Na Abs	600	2004	2007	37760-MT2-003	**100120100**	Interruttore termico | *Temperature switch*
Cbf 600 S	600	2004	2007	37760-MT2-003	**100120100**	Interruttore termico | *Temperature switch*
Cbf 600 Sa Abs	600	2004	2007	37760-MT2-003	**100120100**	Interruttore termico | *Temperature switch*
Cbr 600 F	600	1987	1990	37750-PC1-004	**100120160**	Sensore temperatura | *Temperature sensor*
Cbr 600 F	600	1987	2007	37760-MT2-003	**100120100**	Interruttore termico | *Temperature switch*



Modello *Model*	**CC**	**Da** *From*	**A** *To*	**OEM**	**Codice RMS** *RMS Code*	**Tipologia** *Type*
Cbr 600 F	600	1993	2000	37750-PC1-004	**100120160**	Sensore temperatura | *Temperature sensor*
Cbr 600 Fr Rossi	600	2001	2002	37760-MT2-003	**100120100**	Interruttore termico | *Temperature switch*
Cbr 600 Fr Rossi	600	2001	2002	37750-PC1-004	**100120160**	Sensore temperatura | *Temperature sensor*
Cbr 600 Fs Sport	600	2001	2002	37760-MT2-003	**100120100**	Interruttore termico | *Temperature switch*
Cbr 600 Fs Sport	600	2001	2002	37750-PC1-004	**100120160**	Sensore temperatura | *Temperature sensor*
Ntv 600 Revere	600	1988	1991	19300-KE8-000	**100120300**	Termostato | *Thermostat*
Vt 600 C Shadow	600	1989	2000	37760-MT2-003	**100120100**	Interruttore termico | *Temperature switch*
Vt 600 C Shadow	600	1989	2000	37750-PC1-004	**100120160**	Sensore temperatura | *Temperature sensor*
Vt 600 C Shadow Sprocket Large Spline	600	1988	1988	37760-MT2-003	**100120100**	Interruttore termico | *Temperature switch*
Vt 600 C Shadow Sprocket Large Spline	600	1988	1988	37750-PC1-004	**100120160**	Sensore temperatura | *Temperature sensor*
Vt 600 C Shadow Sprocket Narrow Spline	600	1988	1988	37760-MT2-003	**100120100**	Interruttore termico | *Temperature switch*
Vt 600 C Shadow Sprocket Narrow Spline	600	1988	1988	37750-PC1-004	**100120160**	Sensore temperatura | *Temperature sensor*
Xl 600 V Transalp	600	1987	1987	37760-MT2-003	**100120100**	Interruttore termico | *Temperature switch*
Xl 600 V Transalp	600	1987	1987	37750-PC1-004	**100120160**	Sensore temperatura | *Temperature sensor*
Xl 600 V Transalp	600	1989	2000	37760-MT2-003	**100120100**	Interruttore termico | *Temperature switch*
Xl 600 V Transalp	600	1989	2000	37750-PC1-004	**100120160**	Sensore temperatura | *Temperature sensor*
Xl 600 V Transalp Sprocket Large Spline	600	1988	1988	37760-MT2-003	**100120100**	Interruttore termico | *Temperature switch*
Xl 600 V Transalp Sprocket Large Spline	600	1988	1988	37750-PC1-004	**100120160**	Sensore temperatura | *Temperature sensor*
Xl 600 V Transalp Sprocket Narrow Spline	600	1988	1988	37760-MT2-003	**100120100**	Interruttore termico | *Temperature switch*
Xl 600 V Transalp Sprocket Narrow Spline	600	1988	1988	37750-PC1-004	**100120160**	Sensore temperatura | *Temperature sensor*
Nt 650 Gt Hawk/Bros	650	1988	1990	37760-MT2-003	**100120100**	Interruttore termico | *Temperature switch*
Nt 650 Gt Hawk/Bros	650	1988	1990	37750-PC1-004	**100120160**	Sensore temperatura | *Temperature sensor*
Nt 650 V Deauville	650	1998	2001	37760-MT2-003	**100120100**	Interruttore termico | *Temperature switch*
Nt 650 V Deauville	650	1998	2001	19300-KE8-000	**100120300**	Termostato | *Thermostat*
Nt 650 V Deauville Cbs	650	2002	2005	37760-MT2-003	**100120100**	Interruttore termico | *Temperature switch*
Nt 650 V Deauville Cbs	650	2002	2005	19300-KE8-000	**100120300**	Termostato | *Thermostat*
Ntv 650 Revere	650	1988	1997	37760-MT2-003	**100120100**	Interruttore termico | *Temperature switch*
Ntv 650 Revere	650	1988	1997	37750-PC1-004	**100120160**	Sensore temperatura | *Temperature sensor*
Ntv 650 Revere	650	1988	1997	19300-KE8-000	**100120300**	Termostato | *Thermostat*
Xl 650 V Transalp	650	2000	2007	37760-MT2-003	**100120100**	Interruttore termico | *Temperature switch*
Xl 650 V Transalp	650	2000	2007	37750-PC1-004	**100120160**	Sensore temperatura | *Temperature sensor*
Xl 650 V Transalp	650	2000	2007	19300-KE8-000	**100120300**	Termostato | *Thermostat*
Xrv 650 Africa Twin	650	1988	1990	37760-MT2-003	**100120100**	Interruttore termico | *Temperature switch*
Xrv 650 Africa Twin	650	1988	1990	37750-PC1-004	**100120160**	Sensore temperatura | *Temperature sensor*
Xrv 650 Africa Twin	650	1988	1990	19300-KE8-000	**100120300**	Termostato | *Thermostat*
Vf 750 C Magna	750	1982	1984	37750-PC1-004	**100120160**	Sensore temperatura | *Temperature sensor*
Vf 750 C Magna	750	1993	2000	37760-MT2-003	**100120100**	Interruttore termico | *Temperature switch*
Vf 750 C Magna	750	1993	2000	37750-PC1-004	**100120160**	Sensore temperatura | *Temperature sensor*
Vf 750 F Interceptor V45	750	1983	1984	37750-PC1-004	**100120160**	Sensore temperatura | *Temperature sensor*
Vf 750 S Sabre V45	750	1982	1984	37750-PC1-004	**100120160**	Sensore temperatura | *Temperature sensor*
Vfr 750 F	750	1986	1997	37760-MT2-003	**100120100**	Interruttore termico | *Temperature switch*
Vfr 750 F	750	1986	1997	37750-PC1-004	**100120160**	Sensore temperatura | *Temperature sensor*
Vfr 750 R	750	1988	1993	37750-PC1-004	**100120160**	Sensore temperatura | *Temperature sensor*
Vt 750 C Shadow	750	1987	1987	37760-MT2-003	**100120100**	Interruttore termico | *Temperature switch*
Vt 750 C Shadow	750	1987	1987	37750-PC1-004	**100120160**	Sensore temperatura | *Temperature sensor*
Vt 750 C Shadow	750	1997	2000	37760-MT2-003	**100120100**	Interruttore termico | *Temperature switch*
Vt 750 C Shadow	750	1997	2000	19300-KE8-000	**100120300**	Termostato | *Thermostat*
Vt 750 C Shadow	750	2004	2007	37760-MT2-003	**100120100**	Interruttore termico | *Temperature switch*
Vt 750 C Shadow	750	2004	2009	19300-KE8-000	**100120300**	Termostato | *Thermostat*
Vt 750 C2 Shadow Aero	750	1997	2002	37760-MT2-003	**100120100**	Interruttore termico | *Temperature switch*
Vt 750 C2 Shadow Aero	750	1997	2002	19300-KE8-000	**100120300**	Termostato | *Thermostat*
Vt 750 C2 Shadow Spirit	750	2007	2009	19300-KE8-000	**100120300**	Termostato | *Thermostat*
Vt 750 C2B Shadow Black Spirit	750	2010	2016	19300-KE8-000	**100120300**	Termostato | *Thermostat*
Vt 750 Ca Shadow	750	2006	2007	37760-MT2-003	**100120100**	Interruttore termico | *Temperature switch*
Vt 750 Ca Shadow	750	2006	2009	19300-KE8-000	**100120300**	Termostato | *Thermostat*
Vt 750 Cs Shadow Abs	750	2010	2016	19300-KE8-000	**100120300**	Termostato | *Thermostat*
Vt 750 Dc Black Widow	750	2000	2003	37760-MT2-003	**100120100**	Interruttore termico | *Temperature switch*
Vt 750 Dc Black Widow	750	2000	2003	19300-KE8-000	**100120300**	Termostato | *Thermostat*
Xrv 750 Africa Twin	750	1990	2003	37760-MT2-003	**100120100**	Interruttore termico | *Temperature switch*



Modello *Model*	**CC**	**Da** *From*	**A** *To*	**OEM**	**Codice RMS** *RMS Code*	**Tipologia** *Type*
Xrv 750 Africa Twin	750	1990	2003	37750-PC1-004	**100120160**	Sensore temperatura | *Temperature sensor*
Xrv 750 Africa Twin	750	1990	2003	19300-KE8-000	**100120300**	Termostato | *Thermostat*
Vfr 800	800	2002	2010	37760-MT2-003	**100120100**	Interruttore termico | *Temperature switch*
Vfr 800 A Abs	800	2002	2013	37760-MT2-003	**100120100**	Interruttore termico | *Temperature switch*
Vfr 800 Fi	800	1998	2001	37760-MT2-003	**100120100**	Interruttore termico | *Temperature switch*
Vfr 800 Fi Jubi Modell	800	1999	1999	37760-MT2-003	**100120100**	Interruttore termico | *Temperature switch*
Cbr 900 Rr Fireblade	900	1992	1997	37750-PC1-004	**100120160**	Sensore temperatura | *Temperature sensor*
Cbr 900 Rr Fireblade	900	1992	2001	37760-MT2-003	**100120100**	Interruttore termico | *Temperature switch*
Cbr 900 Rr Fireblade	900	1997	1997	37750-PC1-004	**100120160**	Sensore temperatura | *Temperature sensor*
Cb 1000 F Super Four	1000	1993	1996	37760-MT2-003	**100120100**	Interruttore termico | *Temperature switch*
Cb 1000 F Super Four	1000	1993	1996	37750-PC1-004	**100120160**	Sensore temperatura | *Temperature sensor*
Cbr 1000 F	1000	1987	1992	37760-MT2-003	**100120100**	Interruttore termico | *Temperature switch*
Cbr 1000 F Dual Cbs	1000	1993	2000	37760-MT2-003	**100120100**	Interruttore termico | *Temperature switch*
Cbr 1000 F Dual Cbs	1000	1993	2000	37750-PC1-004	**100120160**	Sensore temperatura | *Temperature sensor*
Vf 1000 R	1000	1985	1986	37760-MT2-003	**100120100**	Interruttore termico | *Temperature switch*
Vtr 1000 F Fire Storm	1000	1997	2000	37750-PC1-004	**100120160**	Sensore temperatura | *Temperature sensor*
Vtr 1000 F Fire Storm	1000	1997	2006	37760-MT2-003	**100120100**	Interruttore termico | *Temperature switch*
Vtr 1000 Sp1	1000	2000	2001	37760-MT2-003	**100120100**	Interruttore termico | *Temperature switch*
Vtr 1000 Sp2	1000	2002	2006	37760-MT2-003	**100120100**	Interruttore termico | *Temperature switch*
Xl 1000 V Varadero	1000	1999	2002	37750-PC1-004	**100120160**	Sensore temperatura | *Temperature sensor*
Xl 1000 V Varadero	1000	1999	2006	37760-MT2-003	**100120100**	Interruttore termico | *Temperature switch*
Xl 1000 Va Varadero Abs	1000	2004	2006	37760-MT2-003	**100120100**	Interruttore termico | *Temperature switch*
Cb 1100 Sf X-11	1100	2000	2003	37760-MT2-003	**100120100**	Interruttore termico | *Temperature switch*
Cbr 1100 Xx Super Blackbird	1100	1997	1998	37750-PC1-004	**100120160**	Sensore temperatura | *Temperature sensor*
Cbr 1100 Xx Super Blackbird	1100	1997	2000	37760-MT2-003	**100120100**	Interruttore termico | *Temperature switch*
St 1100 A Pan European Abs	1100	1992	2001	37760-MT2-003	**100120100**	Interruttore termico | *Temperature switch*
St 1100 A Pan European Abs	1100	1992	2001	37750-PC1-004	**100120160**	Sensore temperatura | *Temperature sensor*
St 1100 A Pan European Abs Jubi	1100	1999	1999	37760-MT2-003	**100120100**	Interruttore termico | *Temperature switch*
St 1100 A Pan European Abs Jubi	1100	1999	1999	37750-PC1-004	**100120160**	Sensore temperatura | *Temperature sensor*
St 1100 Pan European	1100	1990	2001	37760-MT2-003	**100120100**	Interruttore termico | *Temperature switch*
St 1100 Pan European	1100	1990	2001	37750-PC1-004	**100120160**	Sensore temperatura | *Temperature sensor*
Vf 1100 C Magna V65	1100	1983	1986	37750-PC1-004	**100120160**	Sensore temperatura | *Temperature sensor*
Vt 1100 C Shadow	1100	1988	1989	37760-MT2-003	**100120100**	Interruttore termico | *Temperature switch*
Vt 1100 C Shadow	1100	1988	1989	37750-PC1-004	**100120160**	Sensore temperatura | *Temperature sensor*
Vt 1100 C Shadow	1100	1994	1995	37760-MT2-003	**100120100**	Interruttore termico | *Temperature switch*
Vt 1100 C Shadow	1100	1994	1995	37750-PC1-004	**100120160**	Sensore temperatura | *Temperature sensor*
Vt 1100 C2 Shadow Ace	1100	1995	2000	37760-MT2-003	**100120100**	Interruttore termico | *Temperature switch*
Vt 1100 C2 Shadow Ace	1100	1995	2000	37750-PC1-004	**100120160**	Sensore temperatura | *Temperature sensor*
Vt 1100 C3 Shadow Aero	1100	1998	2000	37760-MT2-003	**100120100**	Interruttore termico | *Temperature switch*
Vt 1100 C3 Shadow Aero	1100	1998	2000	37750-PC1-004	**100120160**	Sensore temperatura | *Temperature sensor*
Cb-X4	1300	1997	1997	37760-MT2-003	**100120100**	Interruttore termico | *Temperature switch*
Cb-X4 1300 Dc	1300	1997	1999	37750-PC1-004	**100120160**	Sensore temperatura | *Temperature sensor*
Cb-X4 1300 Dc	1300	1998	1999	37760-MT2-003	**100120100**	Interruttore termico | *Temperature switch*
Vtx 1300	1300	2003	2007	37760-MT2-003	**100120100**	Interruttore termico | *Temperature switch*
Gl 1500 C Valkyrie F6C	1500	1997	1999	37750-PC1-004	**100120160**	Sensore temperatura | *Temperature sensor*
Gl 1500 Goldwing	1500	1988	1990	37760-MT2-003	**100120100**	Interruttore termico | *Temperature switch*
Gl 1500 Goldwing	1500	1988	1990	37750-PC1-004	**100120160**	Sensore temperatura | *Temperature sensor*
Gl 1500 Se Goldwing	1500	1991	2000	37760-MT2-003	**100120100**	Interruttore termico | *Temperature switch*
Gl 1500 Se Goldwing	1500	1991	2000	37750-PC1-004	**100120160**	Sensore temperatura | *Temperature sensor*
Vtx 1800 C	1800	2001	2004	37760-MT2-003	**100120100**	Interruttore termico | *Temperature switch*
Vtx 1800 C1	1800	2005	2006	37760-MT2-003	**100120100**	Interruttore termico | *Temperature switch*
KYMCO						
B&W	50	2002	2002	00129966	**100120020**	Interruttore termico | *Temperature switch*
B&W	50	2002	2002	00129962	**100120010**	Termostato | *Thermostat*
B&W Euro2	50	2003	2003	00129966	**100120020**	Interruttore termico | *Temperature switch*
B&W Euro2	50	2003	2003	00129962	**100120010**	Termostato | *Thermostat*
Dink Lc	50	1998	2002	00129966	**100120020**	Interruttore termico | *Temperature switch*
Dink Lc	50	1998	2002	00129962	**100120010**	Termostato | *Thermostat*
Super 9	50	2000	2000	00129966	**100120020**	Interruttore termico | *Temperature switch*



Modello *Model*	**CC**	**Da** *From*	**A** *To*	**OEM**	**Codice RMS** *RMS Code*	**Tipologia** *Type*
Super 9	50	2000	2000	00129962	**100120010**	Termostato | *Thermostat*
Super 9 Sport Euro2	50	2003	2004	00129966	**100120020**	Interruttore termico | *Temperature switch*
Super 9 Sport Euro2	50	2003	2004	00129962	**100120010**	Termostato | *Thermostat*
B&W 125-150	125	2000	2000	00129966	**100120020**	Interruttore termico | *Temperature switch*
B&W 125-150	125	2000	2000	00129962	**100120010**	Termostato | *Thermostat*
B&W 125-150 Euro2	125	2003	2004	00170950	**100120030**	Interruttore Termico (Radiatore) | *Temperature switch (Radiator)*
B&W 125-150 Euro2	125	2003	2004	00129966	**100120020**	Interruttore termico (Termostato) | *Temperature switch (Thermostat)*
B&W 125-150 Euro2	125	2003	2004	00129962	**100120010**	Termostato | *Thermostat*
Dink 125 Euro3	125	2006	2007	00170950	**100120030**	Interruttore Termico (Radiatore) | *Temperature switch (Radiator)*
Dink 125 Euro3	125	2006	2007	00129966	**100120020**	Interruttore termico (Termostato) | *Temperature switch (Thermostat)*
Dink 125 Euro3	125	2006	2007	00129962	**100120010**	Termostato | *Thermostat*
Dink 125-150	125	1997	1998	00129962	**100120010**	Termostato | *Thermostat*
Dink Classic 125-150	125	2002	2002	00170950	**100120030**	Interruttore Termico (Radiatore) | *Temperature switch (Radiator)*
Dink Classic 125-150	125	2002	2002	00129966	**100120020**	Interruttore termico (Termostato) | *Temperature switch (Thermostat)*
Dink Classic 125-150 Euro2	125	2003	2003	00170950	**100120030**	Interruttore termico | *Temperature switch*
Dink Lx 125-150	125	1998	2000	00170944	**100120030**	Interruttore Termico (Radiatore) | *Temperature switch (Radiator)*
Dink Lx 125-150	125	1998	2000	00129966	**100120020**	Interruttore termico (Termostato) | *Temperature switch (Thermostat)*
Dink Lx 125-150	125	1998	2000	00129962	**100120010**	Termostato | *Thermostat*
Downtown 125I	125	2009	2016	00170950	**100120030**	Interruttore Termico (Radiatore) | *Temperature switch (Radiator)*
Downtown 125I	125	2009	2016	00129966	**100120020**	Interruttore termico (Termostato) | *Temperature switch (Thermostat)*
Downtown 125I	125	2009	2016	00119113	**100120040**	Termostato | *Thermostat*
Downtown E4	125	2016	2016	00170950	**100120030**	Interruttore Termico (Radiatore) | *Temperature switch (Radiator)*
Downtown E4	125	2016	2016	00129966	**100120020**	Interruttore termico (Termostato) | *Temperature switch (Thermostat)*
Downtown E4	125	2016	2016	00119113	**100120040**	Termostato | *Thermostat*
G-Dink	125	2012	2012	00129966	**100120020**	Interruttore termico | *Temperature switch*
G-Dink	125	2012	2012	00129962	**100120010**	Termostato | *Thermostat*
Grand Dink 125-150	125	2001	2002	00170950	**100120030**	Interruttore Termico (Radiatore) | *Temperature switch (Radiator)*
Grand Dink 125-150	125	2001	2002	00129966	**100120020**	Interruttore termico (Termostato) | *Temperature switch (Thermostat)*
Grand Dink 125-150	125	2001	2002	00129962	**100120010**	Termostato | *Thermostat*
Grand Dink 125-150 Euro2	125	2003	2004	00170950	**100120030**	Interruttore Termico (Radiatore) | *Temperature switch (Radiator)*
Grand Dink 125-150 Euro2	125	2003	2004	00129966	**100120020**	Interruttore termico (Termostato) | *Temperature switch (Thermostat)*
K-Xct I	125	2012	2014	00170950	**100120030**	Interruttore Termico (Radiatore) | *Temperature switch (Radiator)*
K-Xct I	125	2012	2014	00129966	**100120020**	Interruttore termico (Termostato) | *Temperature switch (Thermostat)*
K-Xct I	125	2012	2014	00119113	**100120040**	Termostato | *Thermostat*
People Gti	125	2010	2010	00170950	**100120030**	Interruttore Termico (Radiatore) | *Temperature switch (Radiator)*
People Gti	125	2010	2010	00129966	**100120020**	Interruttore termico (Termostato) | *Temperature switch (Thermostat)*
People Gti	125	2010	2010	00129962	**100120010**	Termostato | *Thermostat*
People Gti	125	2014	2014	00170950	**100120030**	Interruttore Termico (Radiatore) | *Temperature switch (Radiator)*
People Gti	125	2014	2014	00129966	**100120020**	Interruttore termico (Termostato) | *Temperature switch (Thermostat)*
People Gti	125	2014	2014	00119113	**100120040**	Termostato | *Thermostat*
People Gti E4 I	125	2016	2016	00119113	**100120040**	Termostato | *Thermostat*
X Town Cbs	125	2016	2016	00129966	**100120020**	Interruttore termico | *Temperature switch*
X-Town Cbs	125	2016	2016	00170950	**100120030**	Interruttore termico | *Temperature switch*
X-Town Cbs	125	2016	2016	00119113	**100120040**	Termostato | *Thermostat*
B&W 125-150	150	2000	2000	00170950	**100120030**	Interruttore termico | *Temperature switch*
B&W 125-150	150	2000	2000	00129962	**100120010**	Termostato | *Thermostat*
Dink 125-150	150	1997	1998	00170944	**100120030**	Interruttore termico | *Temperature switch*
Dink Classic 125-150	150	2002	2002	00170950	**100120030**	Interruttore Termico (Radiatore) | *Temperature switch (Radiator)*
Dink Classic 125-150	150	2002	2002	00129966	**100120020**	Interruttore termico (Termostato) | *Temperature switch (Thermostat)*
Dink Classic 125-150	150	2002	2002	00129962	**100120010**	Termostato | *Thermostat*



Modello *Model*	**CC**	**Da** *From*	**A** *To*	**OEM**	**Codice RMS** *RMS Code*	**Tipologia** *Type*
Dink Classic 125-150 Euro2	150	2003	2003	00129966	**100120020**	Interruttore termico | *Temperature switch*
Dink Classic 125-150 Euro2	150	2003	2003	00129962	**100120010**	Termostato | *Thermostat*
Dink Lx 125-150	150	1998	2000	00170944	**100120030**	Interruttore Termico (Radiatore) | *Temperature switch (Radiator)*
Dink Lx 125-150	150	1998	2000	00129966	**100120020**	Interruttore termico (Termostato) | *Temperature switch (Thermostat)*
Grand Dink 125-150	150	2001	2002	00129966	**100120020**	Interruttore termico | *Temperature switch*
Grand Dink 125-150 Euro2	150	2003	2004	00170950	**100120030**	Interruttore termico | *Temperature switch*
Grand Dink 125-150 Euro2	150	2003	2004	00129962	**100120010**	Termostato | *Thermostat*
Dink Classic	200	2004	2004	00170950	**100120030**	Interruttore Termico (Radiatore) | *Temperature switch (Radiator)*
Dink Classic	200	2004	2004	00129966	**100120020**	Interruttore termico (Termostato) | *Temperature switch (Thermostat)*
Dink Classic	200	2004	2004	00129962	**100120010**	Termostato | *Thermostat*
Dink Euro3I	200	2006	2007	00170950	**100120030**	Interruttore Termico (Radiatore) | *Temperature switch (Radiator)*
Dink Euro3I	200	2006	2007	00129966	**100120020**	Interruttore termico (Termostato) | *Temperature switch (Thermostat)*
Dink Euro3I	200	2006	2007	00129962	**100120010**	Termostato | *Thermostat*
Downtown I	200	2010	2010	00170950	**100120030**	Interruttore Termico (Radiatore) | *Temperature switch (Radiator)*
Downtown I	200	2010	2010	00129966	**100120020**	Interruttore termico (Termostato) | *Temperature switch (Thermostat)*
Downtown I	200	2010	2010	00129962	**100120010**	Termostato | *Thermostat*
People Gti	200	2010	2010	00170950	**100120030**	Interruttore Termico (Radiatore) | *Temperature switch (Radiator)*
People Gti	200	2010	2010	00129966	**100120020**	Interruttore termico (Termostato) | *Temperature switch (Thermostat)*
People Gti	200	2010	2010	00129962	**100120010**	Termostato | *Thermostat*
People Gti	200	2014	2014	00170950	**100120030**	Interruttore Termico (Radiatore) | *Temperature switch (Radiator)*
People Gti	200	2014	2014	00129966	**100120020**	Interruttore termico (Termostato) | *Temperature switch (Thermostat)*
People Gti	200	2014	2014	00129962	**100120010**	Termostato | *Thermostat*
B&W	250	2000	2000	00170950	**100120030**	Interruttore Termico (Radiatore) | *Temperature switch (Radiator)*
B&W	250	2000	2000	00129966	**100120020**	Interruttore termico (Termostato) | *Temperature switch (Thermostat)*
B&W	250	2000	2000	00129962	**100120010**	Termostato | *Thermostat*
B&W Euro2	250	2003	2003	00170950	**100120030**	Interruttore Termico (Radiatore) | *Temperature switch (Radiator)*
B&W Euro2	250	2003	2003	00129966	**100120020**	Interruttore termico (Termostato) | *Temperature switch (Thermostat)*
B&W Euro2	250	2003	2003	00129962	**100120010**	Termostato | *Thermostat*
Grand Dink	250	2001	2002	00170950	**100120030**	Interruttore Termico (Radiatore) | *Temperature switch (Radiator)*
Grand Dink	250	2001	2002	00129966	**100120020**	Interruttore termico (Termostato) | *Temperature switch (Thermostat)*
Grand Dink	250	2001	2002	00129962	**100120010**	Termostato | *Thermostat*
Grand Dink Euro2	250	2003	2004	00170950	**100120030**	Interruttore Termico (Radiatore) | *Temperature switch (Radiator)*
Grand Dink Euro2	250	2003	2004	00129966	**100120020**	Interruttore termico (Termostato) | *Temperature switch (Thermostat)*
Grand Dink Euro2	250	2003	2004	00129962	**100120010**	Termostato | *Thermostat*
Kxr	250	2003	2004	00170950	**100120030**	Interruttore Termico (Radiatore) | *Temperature switch (Radiator)*
Kxr	250	2003	2004	00129966	**100120020**	Interruttore termico (Termostato) | *Temperature switch (Thermostat)*
Kxr	250	2003	2004	00129962	**100120010**	Termostato | *Thermostat*
Mxu	250	2005	2005	00170950	**100120030**	Interruttore Termico (Radiatore) | *Temperature switch (Radiator)*
Mxu	250	2005	2005	00129966	**100120020**	Interruttore termico (Termostato) | *Temperature switch (Thermostat)*
Mxu	250	2005	2005	00129962	**100120010**	Termostato | *Thermostat*
People Lc	250	2003	2004	00170950	**100120030**	Interruttore Termico (Radiatore) | *Temperature switch (Radiator)*
People Lc	250	2003	2004	00129966	**100120020**	Interruttore termico (Termostato) | *Temperature switch (Thermostat)*
People Lc	250	2003	2004	00129962	**100120010**	Termostato | *Thermostat*
People S	250	2006	2006	00170950	**100120030**	Interruttore Termico (Radiatore) | *Temperature switch (Radiator)*
People S	250	2006	2006	00129966	**100120020**	Interruttore termico (Termostato) | *Temperature switch (Thermostat)*
People S	250	2006	2006	00129962	**100120010**	Termostato | *Thermostat*
People S 250I	250	2007	2007	00170950	**100120030**	Interruttore Termico (Radiatore) | *Temperature switch (Radiator)*
People S 250I	250	2007	2007	00129966	**100120020**	Interruttore termico (Termostato) | *Temperature switch (Thermostat)*



Modello *Model*	**CC**	**Da** *From*	**A** *To*	**OEM**	**Codice RMS** *RMS Code*	**Tipologia** *Type*
People S 250I	250	2007	2007	00129962	**100120010**	Termostato | *Thermostat*
Venox	250	2002	2003	00170950	**100120030**	Interruttore Termico (Radiatore) | *Temperature switch (Radiator)*
Venox	250	2002	2003	00129966	**100120020**	Interruttore termico (Termostato) | *Temperature switch (Thermostat)*
Venox Euro2	250	2004	2004	00170950	**100120030**	Interruttore Termico (Radiatore) | *Temperature switch (Radiator)*
Venox Euro2	250	2004	2004	00129966	**100120020**	Interruttore termico (Termostato) | *Temperature switch (Thermostat)*
Venox Euro3	250	2007	2007	00129966	**100120020**	Interruttore termico | *Temperature switch*
X Citing	250	2005	2005	00170950	**100120030**	Interruttore Termico (Radiatore) | *Temperature switch (Radiator)*
X Citing	250	2005	2005	00129966	**100120020**	Interruttore termico (Termostato) | *Temperature switch (Thermostat)*
X Citing	250	2005	2005	00129962	**100120010**	Termostato | *Thermostat*
X Citing I	250	2006	2007	00170950	**100120030**	Interruttore Termico (Radiatore) | *Temperature switch (Radiator)*
X Citing I	250	2006	2007	00129966	**100120020**	Interruttore termico (Termostato) | *Temperature switch (Thermostat)*
Yup	250	2003	2003	00129966	**100120020**	Interruttore termico | *Temperature switch*
Yup	250	2003	2003	00129962	**100120010**	Termostato | *Thermostat*
Downtown 300I	300	2009	2009	00170950	**100120030**	Interruttore Termico (Radiatore) | *Temperature switch (Radiator)*
Downtown 300I	300	2009	2009	00129966	**100120020**	Interruttore termico (Termostato) | *Temperature switch (Thermostat)*
Downtown 300I	300	2009	2009	00129962	**100120010**	Termostato | *Thermostat*
Downtown Abs	300	2010	2010	00170950	**100120030**	Interruttore Termico (Radiatore) | *Temperature switch (Radiator)*
Downtown Abs	300	2010	2010	00129966	**100120020**	Interruttore termico (Termostato) | *Temperature switch (Thermostat)*
Downtown Abs	300	2010	2010	00129962	**100120010**	Termostato | *Thermostat*
Downtown Abs I	300	2011	2016	00170950	**100120030**	Interruttore Termico (Radiatore) | *Temperature switch (Radiator)*
Downtown Abs I	300	2011	2016	00129966	**100120020**	Interruttore termico (Termostato) | *Temperature switch (Thermostat)*
Downtown Abs I	300	2011	2016	00119113	**100120040**	Termostato | *Thermostat*
Downtown I	300	2011	2011	00170950	**100120030**	Interruttore Termico (Radiatore) | *Temperature switch (Radiator)*
Downtown I	300	2011	2011	00129966	**100120020**	Interruttore termico (Termostato) | *Temperature switch (Thermostat)*
Downtown I	300	2011	2011	00119113	**100120040**	Termostato | *Thermostat*
G-Dink	300	2012	2012	00129966	**100120020**	Interruttore termico | *Temperature switch*
G-Dink	300	2012	2012	00129962	**100120010**	Termostato | *Thermostat*
K-Xct I	300	2012	2012	00170950	**100120030**	Interruttore Termico (Radiatore) | *Temperature switch (Radiator)*
K-Xct I	300	2012	2012	00129966	**100120020**	Interruttore termico (Termostato) | *Temperature switch (Thermostat)*
K-Xct I	300	2012	2012	00119113	**100120040**	Termostato | *Thermostat*
K-Xct I Abs	300	2014	2014	00119113	**100120040**	Termostato | *Thermostat*
Maxxer	300	2005	2006	00170950	**100120030**	Interruttore Termico (Radiatore) | *Temperature switch (Radiator)*
Maxxer	300	2005	2006	00129966	**100120020**	Interruttore termico (Termostato) | *Temperature switch (Thermostat)*
Maxxer	300	2005	2006	00129962	**100120010**	Termostato | *Thermostat*
Maxxer Onroad	300	2016	2016	00170950	**100120030**	Interruttore Termico (Radiatore) | *Temperature switch (Radiator)*
Maxxer Onroad	300	2016	2016	00129966	**100120020**	Interruttore termico (Termostato) | *Temperature switch (Thermostat)*
Maxxer Onroad	300	2016	2016	00129962	**100120010**	Termostato | *Thermostat*
Mxu	300	2005	2006	00170950	**100120030**	Interruttore Termico (Radiatore) | *Temperature switch (Radiator)*
Mxu	300	2005	2006	00129966	**100120020**	Interruttore termico (Termostato) | *Temperature switch (Thermostat)*
Mxu	300	2005	2006	00129962	**100120010**	Termostato | *Thermostat*
Mxu R	300	2010	2010	00170950	**100120030**	Interruttore Termico (Radiatore) | *Temperature switch (Radiator)*
Mxu R	300	2010	2010	00129966	**100120020**	Interruttore termico (Termostato) | *Temperature switch (Thermostat)*
Mxu R	300	2010	2010	00129962	**100120010**	Termostato | *Thermostat*
People Gti	300	2010	2010	00170950	**100120030**	Interruttore Termico (Radiatore) | *Temperature switch (Radiator)*
People Gti	300	2010	2010	00129966	**100120020**	Interruttore termico (Termostato) | *Temperature switch (Thermostat)*
People Gti	300	2010	2010	00129962	**100120010**	Termostato | *Thermostat*
People Gti	300	2011	2011	00170950	**100120030**	Interruttore Termico (Radiatore) | *Temperature switch (Radiator)*
People Gti	300	2011	2011	00129966	**100120020**	Interruttore termico (Termostato) | *Temperature switch (Thermostat)*



Modello *Model*	**CC**	**Da** *From*	**A** *To*	**OEM**	**Codice RMS** *RMS Code*	**Tipologia** *Type*
People Gti	300	2011	2011	00119113	**100120040**	Termostato | *Thermostat*
People Gti	300	2014	2014	00170950	**100120030**	Interruttore Termico (Radiatore) | *Temperature switch (Radiator)*
People Gti	300	2014	2014	00129966	**100120020**	Interruttore termico (Termostato) | *Temperature switch (Thermostat)*
People Gti	300	2014	2014	00119113	**100120040**	Termostato | *Thermostat*
People Gti Abs	300	2012	2012	00170950	**100120030**	Interruttore Termico (Radiatore) | *Temperature switch (Radiator)*
People Gti Abs	300	2012	2012	00129966	**100120020**	Interruttore termico (Termostato) | *Temperature switch (Thermostat)*
People Gti Abs	300	2012	2012	00119113	**100120040**	Termostato | *Thermostat*
People Gti Abs	300	2014	2014	00170950	**100120030**	Interruttore Termico (Radiatore) | *Temperature switch (Radiator)*
People Gti Abs	300	2014	2014	00129966	**100120020**	Interruttore termico (Termostato) | *Temperature switch (Thermostat)*
People Gti Abs	300	2014	2014	00119113	**100120040**	Termostato | *Thermostat*
People Gti Abs E4	300	2016	2016	00170950	**100120030**	Interruttore Termico (Radiatore) | *Temperature switch (Radiator)*
People Gti Abs E4	300	2016	2016	00129966	**100120020**	Interruttore termico (Termostato) | *Temperature switch (Thermostat)*
People Gti Abs E4	300	2016	2016	00119113	**100120040**	Termostato | *Thermostat*
People S 300I	300	2008	2008	00170950	**100120030**	Interruttore Termico (Radiatore) | *Temperature switch (Radiator)*
People S 300I	300	2008	2008	00129966	**100120020**	Interruttore termico (Termostato) | *Temperature switch (Thermostat)*
People S 300I	300	2008	2008	00129962	**100120010**	Termostato | *Thermostat*
X Citing 300I	300	2008	2008	00170950	**100120030**	Interruttore Termico (Radiatore) | *Temperature switch (Radiator)*
X Citing 300I	300	2008	2008	00129966	**100120020**	Interruttore termico (Termostato) | *Temperature switch (Thermostat)*
X Citing 300I	300	2008	2008	00129962	**100120010**	Termostato | *Thermostat*
X Citing 300I R	300	2008	2008	00170950	**100120030**	Interruttore Termico (Radiatore) | *Temperature switch (Radiator)*
X Citing 300I R	300	2008	2008	00129966	**100120020**	Interruttore termico (Termostato) | *Temperature switch (Thermostat)*
X Citing 300I R	300	2008	2009	00129962	**100120010**	Termostato | *Thermostat*
X Citing 300I R	300	2009	2009	00170950	**100120030**	Interruttore Termico (Radiatore) | *Temperature switch (Radiator)*
X Citing 300I R	300	2009	2009	00129966	**100120020**	Interruttore termico (Termostato) | *Temperature switch (Thermostat)*
X-Town Abs	300	2016	2016	00129962	**100120010**	Termostato | *Thermostat*
Downtown Abs E4	350	2016	2016	00119113	**100120040**	Termostato | *Thermostat*
Downtown I Abs	350	2015	2015	00119113	**100120040**	Termostato | *Thermostat*
X Citing I	400	2013	2013	00129962	**100120010**	Termostato | *Thermostat*
X Citing I	400	2015	2015	00129962	**100120010**	Termostato | *Thermostat*
X Citing I Abs	400	2014	2015	00129962	**100120010**	Termostato | *Thermostat*
X Citing I Abs E4	400	2016	2016	00129962	**100120010**	Termostato | *Thermostat*
Maxxer I	450	2010	2010	00170950	**100120030**	Interruttore termico | *Temperature switch*
Mxu	500	2005	2006	00170950	**100120030**	Interruttore Termico (Radiatore) | *Temperature switch (Radiator)*
Mxu	500	2005	2006	00129966	**100120020**	Interruttore termico (Termostato) | *Temperature switch (Thermostat)*
Mxu Irs	500	2010	2010	00170950	**100120030**	Interruttore termico | *Temperature switch*
Uxv	500	2008	2008	00129966	**100120020**	Interruttore termico | *Temperature switch*
X Citing	500	2005	2005	00170950	**100120030**	Interruttore Termico (Radiatore) | *Temperature switch (Radiator)*
X Citing	500	2005	2005	00129966	**100120020**	Interruttore termico (Termostato) | *Temperature switch (Thermostat)*
X Citing 500 R	500	2009	2009	00170950	**100120030**	Interruttore Termico (Radiatore) | *Temperature switch (Radiator)*
X Citing 500 R	500	2009	2009	00129966	**100120020**	Interruttore termico (Termostato) | *Temperature switch (Thermostat)*
X Citing 500I	500	2006	2007	00170950	**100120030**	Interruttore Termico (Radiatore) | *Temperature switch (Radiator)*
X Citing 500I	500	2006	2007	00129966	**100120020**	Interruttore termico (Termostato) | *Temperature switch (Thermostat)*
X Citing 500I	500	2008	2008	00170950	**100120030**	Interruttore Termico (Radiatore) | *Temperature switch (Radiator)*
X Citing 500I	500	2008	2008	00129966	**100120020**	Interruttore termico (Termostato) | *Temperature switch (Thermostat)*
X Citing 500I R	500	2007	2008	00170950	**100120030**	Interruttore Termico (Radiatore) | *Temperature switch (Radiator)*
X Citing 500I R	500	2007	2008	00129966	**100120020**	Interruttore termico (Termostato) | *Temperature switch (Thermostat)*
Myroad I	700	2011	2011	00170950	**100120030**	Interruttore Termico (Radiatore) | *Temperature switch (Radiator)*
Myroad I	700	2011	2011	00129966	**100120020**	Interruttore termico (Termostato) | *Temperature switch (Thermostat)*



Modello *Model*	CC	Da *From*	A *To*	OEM	Codice RMS *RMS Code*	Tipologia *Type*
MALAGUTI						
F12 Lc Restyling Euro 2	50	2006	2006	02101300	**100120400**	Interruttore termico | *Temperature switch*
F12 Phantom Lc	50	1994	1998	02101300	**100120400**	Interruttore termico | *Temperature switch*
F12 Phantom Lc Euro1	50	1999	2000	02101300	**100120400**	Interruttore termico | *Temperature switch*
F12 Phantom Lc Restyling Eu1	50	2001	2002	02101300	**100120400**	Interruttore termico | *Temperature switch*
F12 Phantom Lc Restyling Eu2	50	2002	2002	02101300	**100120400**	Interruttore termico | *Temperature switch*
F12 Phantom Lc Restyling Eu2-2.3	50	2003	2004	02101300	**100120400**	Interruttore termico | *Temperature switch*
F12 Phantom Lc Twin Disks	50	1998	1998	02101300	**100120400**	Interruttore termico | *Temperature switch*
F12R Phantom Lc	50	2007	2010	02101300	**100120400**	Interruttore termico | *Temperature switch*
F15 Fire Fox	50	1996	1998	02101300	**100120400**	Interruttore termico | *Temperature switch*
F15 Fire Fox Euro2	50	2002	2003	02101300	**100120400**	Interruttore termico | *Temperature switch*
F15 Fire Fox Restyling Euro2-2.3	50	2003	2004	02101300	**100120400**	Interruttore termico | *Temperature switch*
F15 Fire Fox Twin Disks & Special	50	1998	1999	02101300	**100120400**	Interruttore termico | *Temperature switch*
F15 Fire Fox Twin Disks Digit Kat	50	1998	2000	02101300	**100120400**	Interruttore termico | *Temperature switch*
F15 Lc Restyling Euro 2	50	2004	2005	02101300	**100120400**	Interruttore termico | *Temperature switch*
F15 Lc-Tds Restyling Euro 1	50	2001	2001	02101300	**100120400**	Interruttore termico | *Temperature switch*
Xsm Power Up	50	2007	2010	02103700	**100120410**	Interruttore termico | *Temperature switch*
Xtm Power Up	50	2007	2010	02103700	**100120410**	Interruttore termico | *Temperature switch*
MBK						
Yq L Nitro Jaguar	50	2004	2004	5BSH36050200	**100120360**	Interruttore termico | *Temperature switch*
Yq Nitro	50	2001	2002	5BSH36051000	**100120360**	Interruttore termico | *Temperature switch*
Yq Nitro	50	2004	2004	5BSH36050200	**100120360**	Interruttore termico | *Temperature switch*
Yq Nitro (Ita)	50	1997	1998	5BSH36050200	**100120360**	Interruttore termico | *Temperature switch*
Yq Nitro Euro2	50	2003	2003	5BSH36050200	**100120360**	Interruttore termico | *Temperature switch*
PIAGGIO						
Fly 4T 4V	50	2012	2013	581142	**100120060**	Sensore temperatura acqua | *Water temperature sensor*
Beverly	125	2001	2003	581142	**100120060**	Sensore temperatura acqua | *Water temperature sensor*
Beverly Rst 4T 4V Ie Euro3	125	2010	2015	581142	**100120060**	Sensore temperatura acqua | *Water temperature sensor*
Fly Euro3	125	2007	2011	581142	**100120060**	Sensore temperatura acqua | *Water temperature sensor*
Hexagon	125	1994	1997	293301	**100120460**	Interruttore termico | *Temperature switch*
Hexagon Gtx	125	2000	2000	293301	**100120460**	Interruttore termico | *Temperature switch*
Hexagon Gtx	125	2000	2000	581142	**100120060**	Sensore temperatura acqua | *Water temperature sensor*
Hexagon Lx-Lxt	125	1998	1999	293301	**100120460**	Interruttore termico | *Temperature switch*
Liberty 4T 2V Ie Ptt - Ita	125	2012	2013	581142	**100120060**	Sensore temperatura acqua | *Water temperature sensor*
Liberty 4T Euro3	125	2006	2008	581142	**100120060**	Sensore temperatura acqua | *Water temperature sensor*
Liberty 4T Euro3 Delivery - Single	125	2007	2015	581142	**100120060**	Sensore temperatura acqua | *Water temperature sensor*
Liberty 4T Euro3 Delivery - Tnt - Nexive	125	2008	2015	581142	**100120060**	Sensore temperatura acqua | *Water temperature sensor*
Liberty 4T Sport Euro3	125	2006	2008	581142	**100120060**	Sensore temperatura acqua | *Water temperature sensor*
Medley 4T Ie Abs	125	2016	2016	581142	**100120060**	Sensore temperatura acqua | *Water temperature sensor*
Mp3	125	2006	2008	581142	**100120060**	Sensore temperatura acqua | *Water temperature sensor*
Mp3 Ie	125	2008	2009	581142	**100120060**	Sensore temperatura acqua | *Water temperature sensor*
Mp3 Ie Touring	125	2011	2012	581142	**100120060**	Sensore temperatura acqua | *Water temperature sensor*
Skipper 4T	125	2000	2002	581142	**100120060**	Sensore temperatura acqua | *Water temperature sensor*
Super Hexagon Gtx 12	125	2001	2002	293301	**100120460**	Interruttore termico | *Temperature switch*
Super Hexagon Gtx 12	125	2001	2002	581142	**100120060**	Sensore temperatura acqua | *Water temperature sensor*
Typhoon 4T 2V Euro3	125	2010	2011	581142	**100120060**	Sensore temperatura acqua | *Water temperature sensor*
Vespa Lx 4T Fl	125	2009	2009	581142	**100120060**	Sensore temperatura acqua | *Water temperature sensor*
Vespa Lx Euro 3	125	2006	2008	581142	**100120060**	Sensore temperatura acqua | *Water temperature sensor*
Vespa Lxv 4T Navy Euro3	125	2007	2008	581142	**100120060**	Sensore temperatura acqua | *Water temperature sensor*
Vespa S 4T Euro 3	125	2007	2008	581142	**100120060**	Sensore temperatura acqua | *Water temperature sensor*
X Evo	125	2007	2016	581142	**100120060**	Sensore temperatura acqua | *Water temperature sensor*
X10 4T 4V Ie Euro3	125	2012	2015	581142	**100120060**	Sensore temperatura acqua | *Water temperature sensor*
X9	125	2001	2002	581142	**100120060**	Sensore temperatura acqua | *Water temperature sensor*
X9 Evolution	125	2003	2003	581142	**100120060**	Sensore temperatura acqua | *Water temperature sensor*
X9 Evolution	125	2005	2006	581142	**100120060**	Sensore temperatura acqua | *Water temperature sensor*
X9 Evolution Euro3	125	2007	2007	581142	**100120060**	Sensore temperatura acqua | *Water temperature sensor*
Fly Euro3	150	2008	2011	581142	**100120060**	Sensore temperatura acqua | *Water temperature sensor*
Liberty 4T Euro3	150	2008	2008	581142	**100120060**	Sensore temperatura acqua | *Water temperature sensor*



Modello *Model*	**CC**	**Da** *From*	**A** *To*	**OEM**	**Codice RMS** *RMS Code*	**Tipologia** *Type*
Liberty 4T Sport Euro3	150	2008	2008	581142	**100120060**	Sensore temperatura acqua | *Water temperature sensor*
Liberty Moc 4T Euro3	150	2009	2013	581142	**100120060**	Sensore temperatura acqua | *Water temperature sensor*
Medley 4T Ie Abs	150	2016	2016	581142	**100120060**	Sensore temperatura acqua | *Water temperature sensor*
Vespa Lx 4T Fl	150	2009	2009	581142	**100120060**	Sensore temperatura acqua | *Water temperature sensor*
Vespa Lx Euro 3	150	2006	2008	581142	**100120060**	Sensore temperatura acqua | *Water temperature sensor*
Vespa S 4T	150	2008	2009	581142	**100120060**	Sensore temperatura acqua | *Water temperature sensor*
X9 Amalfi	180	2000	2003	581142	**100120060**	Sensore temperatura acqua | *Water temperature sensor*
Liberty 4T Euro3	200	2006	2008	581142	**100120060**	Sensore temperatura acqua | *Water temperature sensor*
Liberty 4T Sport Euro3	200	2006	2007	581142	**100120060**	Sensore temperatura acqua | *Water temperature sensor*
X9	200	2002	2003	581142	**100120060**	Sensore temperatura acqua | *Water temperature sensor*
X9 Evolution	200	2003	2003	581142	**100120060**	Sensore temperatura acqua | *Water temperature sensor*
Hexagon Gt-Gtx	250	1998	2000	293301	**100120460**	Interruttore termico | *Temperature switch*
Hexagon Gt-Gtx	250	1998	2000	581142	**100120060**	Sensore temperatura acqua | *Water temperature sensor*
Mp3	250	2006	2008	581142	**100120060**	Sensore temperatura acqua | *Water temperature sensor*
Mp3 Lt	250	2008	2009	581142	**100120060**	Sensore temperatura acqua | *Water temperature sensor*
Mp3 Mic	250	2008	2009	581142	**100120060**	Sensore temperatura acqua | *Water temperature sensor*
Vespa Gts	250	2005	2016	581142	**100120060**	Sensore temperatura acqua | *Water temperature sensor*
Vespa Gts Abs	250	2005	2012	581142	**100120060**	Sensore temperatura acqua | *Water temperature sensor*
X Evo	250	2007	2016	581142	**100120060**	Sensore temperatura acqua | *Water temperature sensor*
X9	250	2000	2001	581142	**100120060**	Sensore temperatura acqua | *Water temperature sensor*
X9 Evolution	250	2004	2004	581142	**100120060**	Sensore temperatura acqua | *Water temperature sensor*
X9 Evolution	250	2006	2006	581142	**100120060**	Sensore temperatura acqua | *Water temperature sensor*
Beverly Ie Abs E4	300	2016	2016	581142	**100120060**	Sensore temperatura acqua | *Water temperature sensor*
Beverly Rst 4T 4V Ie Euro3	300	2010	2015	581142	**100120060**	Sensore temperatura acqua | *Water temperature sensor*
Mp3 300 Ie Lt	300	2010	2011	581142	**100120060**	Sensore temperatura acqua | *Water temperature sensor*
Mp3 300 Ie Mic	300	2010	2011	581142	**100120060**	Sensore temperatura acqua | *Water temperature sensor*
Mp3 300 Lt Business - Sport Abs - Enjoy	300	2014	2016	581142	**100120060**	Sensore temperatura acqua | *Water temperature sensor*
Mp3 Ie E4 Lt Business - Sport Abs	300	2016	2017	581142	**100120060**	Sensore temperatura acqua | *Water temperature sensor*
Mp3 Ie Lt- Ie Lt Sport	300	2011	2014	581142	**100120060**	Sensore temperatura acqua | *Water temperature sensor*
Mp3 Ie Lt Touring	300	2011	2013	581142	**100120060**	Sensore temperatura acqua | *Water temperature sensor*
Mp3 Ie Touring	300	2011	2012	581142	**100120060**	Sensore temperatura acqua | *Water temperature sensor*
Mp3 Yourban Lt Erl	300	2011	2012	581142	**100120060**	Sensore temperatura acqua | *Water temperature sensor*
Beverly 4T 4V Ie Euro3 Sport Touring	350	2011	2014	581142	**100120060**	Sensore temperatura acqua | *Water temperature sensor*
Beverly 4T St Ie Abs	350	2016	2017	581142	**100120060**	Sensore temperatura acqua | *Water temperature sensor*
X10 4T 4V Ie Euro3	350	2012	2015	581142	**100120060**	Sensore temperatura acqua | *Water temperature sensor*
Mp3	400	2007	2008	581142	**100120060**	Sensore temperatura acqua | *Water temperature sensor*
Mp3 Ie Lt - Mp3 Ie Lt Sport	400	2008	2010	581142	**100120060**	Sensore temperatura acqua | *Water temperature sensor*
Mp3 Ie Lt Touring	400	2011	2011	581142	**100120060**	Sensore temperatura acqua | *Water temperature sensor*
Mp3 Mic	400	2008	2010	581142	**100120060**	Sensore temperatura acqua | *Water temperature sensor*
Mp3 Rl Touring	400	2011	2011	581142	**100120060**	Sensore temperatura acqua | *Water temperature sensor*
X Evo	400	2007	2011	581142	**100120060**	Sensore temperatura acqua | *Water temperature sensor*
Ape Car - Max Diesel	420	1986	1996	287887	**100120380**	Interruttore pressione olio | *Oil pressure sensor*
Ape Mp601 Classic	420	2006	2013	287887	**100120380**	Interruttore pressione olio | *Oil pressure sensor*
Ape Poker Benzina	420	1993	1993	287887	**100120380**	Interruttore pressione olio | *Oil pressure sensor*
Ape Poker Diesel	420	1993	1997	287887	**100120380**	Interruttore pressione olio | *Oil pressure sensor*
Ape Tm P703-P703V Diesel	420	1987	2004	287887	**100120380**	Interruttore pressione olio | *Oil pressure sensor*
Mp3 Lt Business Abs	500	2014	2016	581142	**100120060**	Sensore temperatura acqua | *Water temperature sensor*
Mp3 Lt E4 Sport - Business	500	2016	2016	581142	**100120060**	Sensore temperatura acqua | *Water temperature sensor*
Mp3 Lt Sport - Business	500	2011	2013	581142	**100120060**	Sensore temperatura acqua | *Water temperature sensor*
Mp3 Rl Sport - Business	500	2011	2012	581142	**100120060**	Sensore temperatura acqua | *Water temperature sensor*
Mp3 Sport Abs	500	2014	2016	581142	**100120060**	Sensore temperatura acqua | *Water temperature sensor*
X10 4T 4V Ie Euro3	500	2012	2014	581142	**100120060**	Sensore temperatura acqua | *Water temperature sensor*
X9	500	2001	2002	581142	**100120060**	Sensore temperatura acqua | *Water temperature sensor*
X9 Evolution	500	2003	2007	581142	**100120060**	Sensore temperatura acqua | *Water temperature sensor*
X9 Evolution Abs	500	2006	2007	581142	**100120060**	Sensore temperatura acqua | *Water temperature sensor*
SYM						
Maxsym 400 Abs Euro4	400	2017	2017	37240L4A000	**100120050**	Sensore pressione olio | *Oil pressure sensor*
Maxsym I	400	2011	2012	37240L4A000	**100120050**	Sensore pressione olio | *Oil pressure sensor*
Maxsym I Abs	400	2012	2012	37240L4A000	**100120050**	Sensore pressione olio | *Oil pressure sensor*



Modello *Model*	CC	Da *From*	A *To*	OEM	Codice RMS *RMS Code*	Tipologia *Type*
TRIUMPH						
Speed Four 600	600	2003	2005	T2100807	**100120170**	Sensore temperatura | *Temperature sensor*
Tt 600	600	2000	2003	T2100807	**100120170**	Sensore temperatura | *Temperature sensor*
Daytona 650	650	2005	2005	T2100807	**100120170**	Sensore temperatura | *Temperature sensor*
Daytona 675	675	2006	2013	T2100807	**100120170**	Sensore temperatura | *Temperature sensor*
Daytona 675 Abs	675	2013	2016	T2100807	**100120170**	Sensore temperatura | *Temperature sensor*
Daytona 675 R	675	2011	2012	T2100807	**100120170**	Sensore temperatura | *Temperature sensor*
Daytona 675 R Abs	675	2013	2016	T2100807	**100120170**	Sensore temperatura | *Temperature sensor*
Street Triple 675	675	2008	2013	T2100807	**100120170**	Sensore temperatura | *Temperature sensor*
Street Triple 675 Abs	675	2013	2016	T2100807	**100120170**	Sensore temperatura | *Temperature sensor*
Street Triple 675 R	675	2009	2013	T2100807	**100120170**	Sensore temperatura | *Temperature sensor*
Street Triple 675 R Abs	675	2013	2016	T2100807	**100120170**	Sensore temperatura | *Temperature sensor*
Street Triple 675 Rx Abs	675	2016	2016	T2100807	**100120170**	Sensore temperatura | *Temperature sensor*
Tiger 800	800	2011	2013	T2100807	**100120170**	Sensore temperatura | *Temperature sensor*
Tiger 800 Abs	800	2011	2014	T2100807	**100120170**	Sensore temperatura | *Temperature sensor*
Tiger 800 Xc	800	2011	2013	T2100807	**100120170**	Sensore temperatura | *Temperature sensor*
Tiger 800 Xc Abs	800	2011	2016	T2100807	**100120170**	Sensore temperatura | *Temperature sensor*
Tiger 800 Xca Abs	800	2015	2016	T2100807	**100120170**	Sensore temperatura | *Temperature sensor*
Tiger 800 Xcx Abs	800	2015	2016	T2100807	**100120170**	Sensore temperatura | *Temperature sensor*
Tiger 800 Xcx Low Abs	800	2016	2016	T2100807	**100120170**	Sensore temperatura | *Temperature sensor*
Tiger 800 Xr Abs	800	2015	2016	T2100807	**100120170**	Sensore temperatura | *Temperature sensor*
Tiger 800 Xrt Abs	800	2016	2016	T2100807	**100120170**	Sensore temperatura | *Temperature sensor*
Tiger 800 Xrx Abs	800	2015	2016	T2100807	**100120170**	Sensore temperatura | *Temperature sensor*
Tiger 800 Xrx Low Abs	800	2016	2016	T2100807	**100120170**	Sensore temperatura | *Temperature sensor*
Daytona 955 I Doppio Braccio	955	2002	2002	T2100807	**100120170**	Sensore temperatura | *Temperature sensor*
Daytona 955 I Mono Braccio	955	2000	2006	T2100807	**100120170**	Sensore temperatura | *Temperature sensor*
Daytona 955 I Mono Braccio	955	2002	2006	T2100807	**100120170**	Sensore temperatura | *Temperature sensor*
Sprint 955 Rs Doppio Braccio	955	2002	2002	T2100807	**100120170**	Sensore temperatura | *Temperature sensor*
Sprint 955 Rs Mono Braccio	955	2003	2004	T2100807	**100120170**	Sensore temperatura | *Temperature sensor*
Sprint 955 St	955	1999	2004	T2100807	**100120170**	Sensore temperatura | *Temperature sensor*
Tiger 955 I Cast Wheel	955	2005	2006	T2100807	**100120170**	Sensore temperatura | *Temperature sensor*
Tiger 955 I Spoked Wheel	955	2001	2004	T2100807	**100120170**	Sensore temperatura | *Temperature sensor*
Speed Triple 1050	1050	2011	2011	T2100807	**100120170**	Sensore temperatura | *Temperature sensor*
Speed Triple 1050	1050	2011	2013	T2100807	**100120170**	Sensore temperatura | *Temperature sensor*
Speed Triple 1050 Abs	1050	2011	2015	T2100807	**100120170**	Sensore temperatura | *Temperature sensor*
Speed Triple 1050 R Abs	1050	2012	2016	T2100807	**100120170**	Sensore temperatura | *Temperature sensor*
Speed Triple 1050 R Abs	1050	2016	2016	T2100807	**100120170**	Sensore temperatura | *Temperature sensor*
Tiger Explorer 1200 Abs	1200	2012	2015	T2100807	**100120170**	Sensore temperatura | *Temperature sensor*
Tiger Explorer 1200 Xc Abs	1200	2013	2016	T2100807	**100120170**	Sensore temperatura | *Temperature sensor*
Tiger Explorer 1200 Xca Abs	1200	2016	2016	T2100807	**100120170**	Sensore temperatura | *Temperature sensor*
Tiger Explorer 1200 Xcx Abs	1200	2016	2016	T2100807	**100120170**	Sensore temperatura | *Temperature sensor*
Tiger Explorer 1200 Xr Abs	1200	2016	2016	T2100807	**100120170**	Sensore temperatura | *Temperature sensor*
Trophy 1215 Abs	1215	2013	2014	T2100807	**100120170**	Sensore temperatura | *Temperature sensor*
Trophy 1215 Se Abs	1215	2013	2015	T2100807	**100120170**	Sensore temperatura | *Temperature sensor*
YAMAHA						
Dt R - Dt X	50	2007	2011	5WXH57900000	**100120410**	Interruttore termico | *Temperature switch*
Ns50 Aerox	50	2013	2016	1PHH36050000	**100120390**	Interruttore termico | *Temperature switch*
Ns50N Aerox Naked	50	2013	2016	1PHH36050000	**100120390**	Interruttore termico | *Temperature switch*
Tzr	50	2007	2008	5WXH57900000	**100120410**	Interruttore termico | *Temperature switch*
Tzr	50	2010	2012	5WXH57900000	**100120410**	Interruttore termico | *Temperature switch*
Yq Aerox	50	2001	2002	5BSH36050200	**100120360**	Interruttore termico | *Temperature switch*
Yq Aerox	50	2004	2009	5BSH36050200	**100120360**	Interruttore termico | *Temperature switch*
Yq Aerox	50	2010	2012	5BSH36051000	**100120360**	Interruttore termico | *Temperature switch*
Yq Aerox R	50	1999	2000	5BSH36050200	**100120360**	Interruttore termico | *Temperature switch*
Yq L Aerox Euro2	50	2003	2003	5BSH36050200	**100120360**	Interruttore termico | *Temperature switch*
Mt-03	660	2006	2012	5VK124100000	**100120320**	Termostato | *Thermostat*
Xt660R	660	2004	2011	5VK124100000	**100120320**	Termostato | *Thermostat*
Xt660R	660	2014	2014	5VK124100000	**100120320**	Termostato | *Thermostat*
Xt660X	660	2004	2011	5VK124100000	**100120320**	Termostato | *Thermostat*



Modello *Model*	**CC**	**Da** *From*	**A** *To*	**OEM**	**Codice RMS** *RMS Code*	**Tipologia** *Type*
Xt660X	660	2014	2014	5VK124100000	**100120320**	Termostato | *Thermostat*
Xt660Z Tenere	660	2008	2015	5VK124100000	**100120320**	Termostato | *Thermostat*
Xt660Za Tenere	660	2011	2011	5VK124100000	**100120320**	Termostato | *Thermostat*
Xt660Za Tenere	660	2015	2015	5VK124100000	**100120320**	Termostato | *Thermostat*

100120380 NEW

INTERRUTTORE PRESSIONE OLIO | *OIL PRESSURE SENSOR*

PIAGGIO: R.O. 287887



100120020

INTERRUTTORE TERMICO | *TEMPERATURE SWITCH*
Di primo equipaggiamento | *OEM Quality*

KYMCO: R.O. 00129966



100120030

INTERRUTTORE TERMICO | *TEMPERATURE SWITCH*

KYMCO: R.O. 00170944



100120100 NEW

INTERRUTTORE TERMICO | *TEMPERATURE SWITCH*

HM-MOTO/VENT-MOTO: R.O. 37760-MT2-003
HONDA: R.O. 37760-MT2-003



100120350 NEW

INTERRUTTORE TERMICO | *TEMPERATURE SWITCH*

DUCATI: R.O. 037093180



100120360 NEW

INTERRUTTORE TERMICO | *TEMPERATURE SWITCH*

APRILIA: R.O. AP2BAA000067
DERBI: R.O. AP8212708
MBK: R.O. 5BSH36050200
YAMAHA: R.O. 5BSH36050200



100120370 NEW

INTERRUTTORE TERMICO | *TEMPERATURE SWITCH*

DUCATI: R.O. 55210441A



100120390 NEW

INTERRUTTORE TERMICO | *TEMPERATURE SWITCH*

YAMAHA: R.O. 1PHH36050000



100120400 NEW

INTERRUTTORE TERMICO | *TEMPERATURE SWITCH*

MALAGUTI: R.O. 02101300



100120410 NEW

INTERRUTTORE TERMICO | *TEMPERATURE SWITCH*

MALAGUTI: R.O. 02103700
YAMAHA: R.O. 5WXH57900000



100120420 NEW

INTERRUTTORE TERMICO | *TEMPERATURE SWITCH*

APRILIA: R.O. AP8127441
DERBI: R.O. AP8127441



100120430 NEW

INTERRUTTORE TERMICO | *TEMPERATURE SWITCH*

APRILIA: R.O. AP8112677



100120440 NEW

INTERRUTTORE TERMICO | *TEMPERATURE SWITCH*

APRILIA: R.O. AP8112417



100120450 NEW

INTERRUTTORE TERMICO | *TEMPERATURE SWITCH*

APRILIA: R.O. AP8112939



100120460 NEW

INTERRUTTORE TERMICO | *TEMPERATURE SWITCH*

GILERA: R.O. 293301
PIAGGIO: R.O. 293301



100120130 NEW

SENSORE MAP | *MAP SENSOR*

HARLEY DAVIDSON: R.O. 32319-07



100120140 NEW

SENSORE MAP | *MAP SENSOR*

HARLEY DAVIDSON: R.O. 32424-95



100120150 NEW

SENSORE MAP | *MAP SENSOR*

HARLEY DAVIDSON: R.O. 32316-99



100120050

SENSORE PRESSIONE OLIO | *OIL PRESSURE SENSOR*

SYM: R.O. 37240L4A000



100120060

SENSORE TEMPERATURA ACQUA | *WATER TEMPERATURE SENSOR*

APRILIA: R.O. AP8127916
DERBI: R.O. 581142
GILERA: R.O. 581142
PIAGGIO: R.O. 581142



100120160 NEW

SENSORE TEMPERATURA ACQUA | *TEMPERATURE SENSOR*

HONDA: R.O. 37750-PC1-004



100120170 NEW

SENSORE TEMPERATURA ACQUA | *TEMPERATURE SENSOR*

TRIUMPH: R.O. T2100807



100121000 NEW

SENSORE TEMPERATURA ARIA | *AIR TEMPERATURE SENSOR*

APRILIA: R.O. AP8124936



100120110 NEW

SENSORE TPS | *TPS SENSOR*

HARLEY DAVIDSON: R.O. 27629-01A





100120120 NEW

SENSORE TPS | *TPS SENSOR*

HARLEY DAVIDSON: R.O. 27659-05



100120010

TERMOSTATO | *THERMOSTAT*
Di primo equipaggiamento | *OEM Quality*
KYMCO: R.O. 00129962



100120040

TERMOSTATO | *THERMOSTAT*

KYMCO: R.O. 00119113



100120300 NEW

TERMOSTATO | *THERMOSTAT*
HONDA: R.O. 19300-KE8-000



100120320 NEW

TERMOSTATO | *THERMOSTAT*
YAMAHA: R.O. 5VK124100000





246151000

Kit 10 fusibili lamellari standard | *10 Pcs standard fuses kit*



246151010

Kit 10 fusibili lamellari mini | *10 Pcs mini fuses kit*



246151020

Kit 10 fusibili siluro | *10 Pcs Stc fuses kit*



246151030

Kit 100 fusibili lamellari standard | *100 Pcs standard fuses kit*



246151040

Kit 100 fusibili lamellari mini | *100 Pcs mini fuses kit*





CENTRALINE/BOBINE - *COILS*
APRILIA

246010102

Di primo equipaggiamento | *OEM Quality*

50: Mojito 04-08 • Scarabeo Street 2T RST 06-09 • Scarabeo 2T Net 09-10 • Sport City One 2T 08-10 • SR R Factory ie e Carburatore 10-11 • SR R R Factory 04-09 • SR Street 03-08 • Scarabeo Street 05-06
R.O. 58095R



246010490

246010491

Non limitata | *No power limitation*

50: Scarabeo 4T Restyling Eu3 06-09 • Scarabeo 4T 02-06
R.O. AP8224487



246010501

Limitata 11000RPM | *Power limitation 11000RPM*

100: Scarabeo 4T 01-05
R.O. AP8127310



BETA

246010030

50: Ark Air 96-07 • Ark LC Serie K 04-07 • Ark LC 96-03 • Quadra Chrono 502 95-99 • Tempo 96-99
R.O. 1120670000



DERBI

246010102

Di primo equipaggiamento | *OEM Quality*

50: Boulevard 2T 09 • Variant Sport 2T 12
R.O. 58095R



246010490

246010491

Non limitata | *No power limitation*

50: Atlantis 4T 04-06
R.O. 969383



246010501

Limitata 11000 RPM | *Power limitation 11000 RPM*

100: Atlantis 4T 04-06
R.O. 969896





GILERA

246010070

246010072

50: Stalker 97-04
R.O: 638678



246010102

Di primo equipaggiamento | *OEM Quality*

50: DNA 00-02 • DNA 05-07 • Runner SP 05-07 • Runner SP Special Edition 07 • Runner SP ST & Simoncelli 08-09 • Stalker 97-11 • Stalker Naked 08 • Stalker Special Edition 07-08 • Storm Eu2 07 • Runner SP 10 • DNA GP Experience 03-04 • Ice 01-05 • Runner Poggiali 02 • Runner SP 02-04
R.O. 58095R



MALAGUTI

246010030

50: Centro Base 93-94 • Centro SL 94-00 • Ciak 99-03 • F10 Jet Line 92-98 • F10 Kat 99-00 • F10 RST Eu1 01-02 • F10 RST Eu2 02-03 • F12 Phantom Eu1 99-00 • F12 Phantom LC Eu1 94-02 • F12 Phantom LC Twin Disks 98 • F12 Phantom RST Eu1 01-02 • F12 Phantom RST Eu2 02 • F12 Phantom 94-98 • F15 Fire Fox Twin Disks & Spec 98-99 • F15 Fire Fox Twin Disks Digit Kat 98-00 • F15 Fire Fox 96-98 • F15 LC-TDS RST Eu1 01 • Yesterday • Yesterday Eu 97-00
R.O. 02403300





PIAGGIO

246010050
246010051

50: Ape FL-FL2 89-95 • Ape FL3 Europa 96-99 • Ape TM P 85-89 • Ape Mix 2T 98-08 • Ape RST Mix 99-03 • Ape 50 09-15 • Vespa PK (Tutti i modelli - *All models*)
125-150-200: Vespa Primavera ET3 • Vespa PX • Vespa PXE Arcobaleno • Vespa PX 30 Anni • Vespa PX T5 • Vespa Rally • Vespa PK (Tutti i modelli - *All models*)
R.O. 2441285



246010060
246010062

50: Ciao Eu1 99-01 • Ciao Eu2 02-04 • Ciao Mix Teen 96-01 • Ciao Tre 71-99 • Si FI2 91-97 • Si Mix 96-99 • Si 79-88 • Vespa PK XL Rush • Vespa PK XL • Vespa PK • Vespa N • Ape TM
R.O. 2441275



246010070
246010072

50: Free FL 95-02 • NRG MC3 01-04 • NRG RST MC2 96-98 • Sfera Maquillage 2 94 • Sfera RST 95-97 • Vespa ET2 97-05 • Zip RST 96-99 • Zip SP 96-00 • Liberty PTT Eu2 04-05
R.O. 638678



246010102

Di primo equipaggiamento | *OEM Quality*

50: Fly 2T 05-10 • Liberty 2T 06-11 • Liberty 2T RST 04 • NRG MC3 01-04 • NRG Power DD 05-10 • NRG Power DT 06-08 • Typhoon 05-11 • Vespa LX 2T 05-10 • Vespa LXV 2T 06-08 • Vespa S 2T & College 07-11 • Zip 00-04 • Zip SP Eu2 06-09 • Zip 2T 08-10 • Zip SP 01-04 • Diesis 01 • Typhoon 01-04
R.O. 58095R



246010201

220: Ape Car P2-P3 78-85 • Ape MP P501-P601 78-96 • Ape TM P602 82-83 • Ape TM P703 FL2 99-07 • Ape TM P703-P703V 84-05 • Ape TM 09-16
R.O. 2441295



246010211

125: Skipper 94-97 • Skipper LX 98-99
R.O. 2920345



246010192

125: Hexagon LX4 98-99 • Liberty 98-00 • Sfera 95-97 • Vespa ET4 96-98
R.O. 294150



246010582

50: Ape FL-FL2 89-95 • Ape FL3 Europa 96-99 • Ape TM P 85-89 • Ape Mix 2T 98-08 • Ape RST Mix 99-03 • Ape 50 09-15 • Vespa PK (Tutti i modelli - *All models*)
125-150-200: Vespa Primavera ET3 • Vespa PX • Vespa PXE Arcobaleno • Vespa PX 30 Anni • Vespa PX T5 • Vespa Rally • Vespa PK (Tutti i modelli - *All models*)
R.O. 2441285



246010482

50: Ape 09-11
R.O. 642219





246010472

125-150: Vespa PX
R.O. 642443



246010490

246010491

Non limitata | *No power limitation*

50: Fly 4T 05-15 • Liberty 4T Delivery 09-14 • Liberty 4T PTT Deu 07-12 • Liberty 4T PTT-Double-Nexive 09-15 • Liberty 4T Sport 06-08 • Liberty 4T 05-08 • Liberty Moc 4T & Elle 09-13 • Vespa LX 4T 05-08 • Liberty 4T RST 04 • Liberty 4T 00-02 • Vespa ET4 00-05 • Zip 4T 00-05
R.O. 639978



246010501

Limitata 11000 RPM | *Power limitation 11000 RPM*

100: Free 02-03 • Zip 4T 06-10
R.O. 969896





CENTRALINE BERU - *BERU CDI*

246010590

CENTRALINA ACCENSIONE ZM001 | *IGNITION MODULE ZM001*



246010600

CENTRALINA ACCENSIONE ZM002 | *IGNITION MODULE ZM002*



246010610

CENTRALINA ACCENSIONE ZM026 | *IGNITION MODULE ZM026*



Modello *Model*	**CC**	**Da** *From*	**A** *To*	**Codice RMS** *RMS Code*
BMW				
R 45	450	1980	1985	**246010600**
R 45/N	450	1980	1985	**246010600**
R 65 GS	650	1987	1992	**246010600**
R 80 GS	800	1980	1987	**246010600**
R 80 GS	800	1990	1995	**246010600**
R 80 GS Basic	800	1996	1996	**246010600**
R 80 GS, BD	800	1987	1995	**246010600**
R 80 RT	800	1984	1985	**246010600**
R 80 RT	800	1985	1995	**246010600**
R 80 ST	800	1982	1984	**246010600**
R 100 GS Dakar	980	1987	1995	**246010600**
R 100 GS Dakar Classic	980	1995	1996	**246010600**
R 100 GS, PD	980	1992	1996	**246010600**
R 100 R, R Mystic	980	1991	1996	**246010600**
R 100 RS	980	1980	1984	**246010600**
R 100 RT	980	1980	1984	**246010600**
R 100, CS	980	1980	1984	**246010600**
K 1	1000	1988	1993	**246010610**
K 100 RS	1000	1989	1992	**246010610**
K 1100 LT	1100	1992	1999	**246010610**
K 1100 LT High Line	1100	1997	1999	**246010610**
K 1100 LT Special Edition	1100	1994	1999	**246010610**
K 1100 RS	1100	1993	1996	**246010610**
MUNCH				
1200 TTS-E	1200	1975	1982	**246010590**



CENTRALINE ELETTRONICHE - *ELECTRONIC IGNITION*
BETA

246040102

125-150: Elkon 00-02
R.O. 1241850000



HONDA

246040112

5 Pin
50: SH >95



KYMCO

246040022

Di primo equipaggiamento | *OEM Quality*
50: MXU 06-07 • MXU Sr 06 • People 04 • People 99-00 • People Eu2 08 • People Eu2 03 • People S 05-08
R.O. 00169303



246040032

Di primo equipaggiamento | *OEM Quality*
125-150: People 99-00 • People Eu2 03
R.O. 00169397



246040042

Di primo equipaggiamento | *OEM Quality*
125: Movie 99-00 • Vivio 00
150: Vivio 00
R.O. 00168187





246040072

Di primo equipaggiamento | *OEM Quality*

50: Agility 4T R10 06 • Agility R12 05 • Vitality 4T 04
R.O. 00169082



246040082

8 Pin
Di primo equipaggiamento | *OEM Quality*
50: Agility 4T R16 08-09 • Agility RS 09 • Like 4T 09 • Super 8 07 • Super 8 4T 09
R.O. 00130005



246040092

8 Pin
Di primo equipaggiamento | *OEM Quality*
125: Agility R16 08-09 • Agility RS 09 • Like 09 • Super 8 08-09
150: Agility R16 08-09
R.O. 00130008



246040102

Di primo equipaggiamento | *OEM Quality*

125-150: B&W 00 • B&W Eu2 03-04 • Dink 97-98 • Dink Classic 02 • Dink Classic Eu2 03 • Dink LX 98-00 • Grand Dink 01-02 • Grand Dink Eu2 03-04
R.O. 00168923



246040112

5 Pin
Di primo equipaggiamento | *OEM Quality*
50: Dj X • Dj Y
R.O. 00160001



246040142

Di primo equipaggiamento | *OEM Quality*

50: People S 4T 06-08
R.O. 00101093



246040152

Di primo equipaggiamento | *OEM Quality*
125: Agility 4T Eu3 06-08
R.O. 00168168



246040162

Di primo equipaggiamento | *OEM Quality*
50: Dink Classic Eu2 98-02 • Super 9 00 • Super 9 Sport Eu2 03-04
R.O. 00168900



246040202

Di primo equipaggiamento | *OEM Quality*
200: Dink Classic 04
R.O. 00168060 • 30400-LBF6-E00





246040212

Di primo equipaggiamento | *OEM Quality*

125-200: People S 05
R.O. 00169220 • 30400-LCD4-E10



MALAGUTI

246040032

Di primo equipaggiamento | *OEM Quality*

125-150: Ciak 00-01 • Ciak Master 04 • Ciak RST Eu2 03
R.O. 02406500



246040102

Di primo equipaggiamento | *OEM Quality*

125-150: F18 Warrior 00-02
R.O. 02407500



PEUGEOT

246040112

5 Pin
Di primo equipaggiamento | *OEM Quality*

50: Metropolis • ST Rapido • SV • Geopolis • Buxy • Zenith • Squab • Speedake • Ludix • Trekker • Vivacity (Senza antifurto elettronico) • Looxor • Speedfight (Senza antifurto elettronico) • X-Fight AC (Senza antifurto elettronico)
100: Metal-X • Speedfight (Senza antifurto elettronico) • Trekker • SV
R.O. 740220 - 737615 - 709205



246040132

6 Pin

50: V-Clic 4T QM50QT-6-07-09
Scooter Cinesi - ***Chinese Scooter***
Buffalo QM50QT-6AA
Qingqi QM Qt-2 4T LAEABZ400-07-09-QM50QT-6A 4T LAEABZ400-07-09 QM50QT-6A 4T LAEAGZ400-07-09-QM50T-6AA 4T LAEAKA10-07-09 Rex Tribal Scooter 4T 07-09-Off Limit 4T 07-09-QM50QT-2 Capriolo 4T 07-09 QM50QT-6A RS 450
T 06-09- QM50QT





PGO

246040112

5 Pin

50-100: Scooter 2T Bigmax G • Max TW • Rex PMX



SYM

246040012

Di primo equipaggiamento | *OEM Quality*

100: Cinderella 99-01
125: Attila 99-00 • Euro MX 02 • Euro MX E2 03-04 • Fiddle II 08-10 • Jet4 09 • New Duke 00-01 • Shark 99-02 • Super Duke 99-02 • Symphony 09 • Symphony D.D. 09 • Symphony S 10 • Symphony SR 10 • Symply 07-08
150: Attila 00-01 • Euro MX 02 • Euro MX Eu2 03-04 • Fiddle II 10 • Shark 00-01 • Symphony 09 • Symphony S 10 • Symphony SR 10
R.O. 30410M92000



246040222

Di primo equipaggiamento | *OEM Quality*

50: Mio 06-09
R.O. 30410A1A910



121830560

CAPPUCCIO BOBINA | *COIL CAP*

PIAGGIO 50-125: SI • Vespa PK • Vespa Rush • Vespa N
R.O. 231571



121830570

CAPPUCCIO CENTRALINA | *CDI UNIT CAP*

PIAGGIO 50-125: Vespa PK • Vespa Rush • Vespa N
R.O. 255526



121830580

CAPPUCCIO CENTRALINA | *CDI UNIT CAP*

PIAGGIO 125-150-200: Vespa PX • Cosa 1-2
R.O. 198686



121830910

CAPPUCCIO BOBINA | *COIL CAP*

PIAGGIO 150: Vespa 150 • Vespa GL
PIAGGIO 180: Vespa Rally
VBBA1T-VBBA12T-VLA1T-VSD1T
R.O. 048525





APRILIA

246010040

50: Amico GL-GLE 93-95 • Amico Lx-Sport-Cat 92-93 • Amico 94-98 • Gulliver 95-98 • Rally LC 96-99 • Rally 95-03 • Scarabeo 93-05 • Sonic GP 98-08 • Sonic 98-07 • SR LC 94-96 • SR Stealth, Racing 97-99 • SR WWW 97-01 • SR 93-96
R.O. AP8206125



246010092

Di primo equipaggiamento | *OEM Quality*

125-150: Leonardo 96-01
R.O. AP0265417



246010122

Di primo equipaggiamento | *OEM Quality*

50: Mojito 99-03 • Mojito Custom 93-03 • Mojito Retro 93-03 • SR H2O Ditech e Carburatore 00-03
R.O. AP2RD4000034



246010132

Di primo equipaggiamento | *OEM Quality*

50: Scarabeo 4T 4V Net 09-10 • Scarabeo 4T 4V 10-12 • Scarabeo Quattro 09
125: Atlantic Eu3 06-08 • Sport City Eu3 06-08 • SR Max 11
250: Sport City Cube 08-10 • Scarabeo Light 06-08
300: Atlantic 10-11 • Scarabeo Light 09-10 • Sport City Street 12 • SR Max 11-13
400: Atlantic Sprint 05-08 • Scarabeo Light 400-500 06-08
500: Atlantic 01-04 • Scarabeo 03-06
R.O. 828817



BENELLI

246010040

50: 491 GT 98-99 • 491 RR 98-01 • 491 SP 99 • 491 Sport 98-99 • 491 ST • K2 Liquid Cooled 99-01 • K2 98-01 • Naked 02 • Pepe LX 03-04 • Pepe 99-01
R.O. R51240011A0



246010082

Lunghezza cavo 40 cm | *Cable lenght 40 cm*

125-150: Adiva 01-02
R.O. R51240131A0





BOBINE

COILS

DERBI

246010132

Di primo equipaggiamento | *OEM Quality*

125: Rambla Eu3 2Ver 08 • Rambla 08-09
250: GP1 Low Seat Eu3 07-08
250: Rambla Eu3 2Ver 08 • Rambla 08-09
300: Rambla 10-11
R.O. 828817



GILERA

246010010

50: Easy Moving 95-96 • Storm 94-95 • Typhoon 94-97



246010082

Lunghezza cavo 40 cm | *Cable lenght 40 cm*

125-200: Runner VX-VXR 02-04
R.O. 829337



246010132

Di primo equipaggiamento | *OEM Quality*

125: Nexus Eu3 ie 08-10
250: Nexus 03 07 • Nexus Eu3 06 • Nexus SP Eu3 06-07
300: Nexus Eu3 08-11
500: Nexus Eu3 06-11 • Nexus SP Eu3 06-07 • Nexus 03-05
R.O. 828817



HONDA

246010082

Lunghezza cavo 40 cm | *Cable lenght 40 cm*

50: SJ Bali >93 • GP Dio >91 • SH 91-96 • SFX V >95
100: SJ Bali 96-99 • SH 96-99
125: Chiocciola 00-06 • Dylan 01-06 • SH 125 01-08
150: Chiocciola 00-06 • Dylan 01-06 • SH 150 01-08
R.O. 30510-GW2-000





KYMCO

246010092

Di primo equipaggiamento | *OEM Quality*

250: Grand Dink Eu2 03-04 • Grand Dink 01-02
R.O. 00168940



246010152

Di primo equipaggiamento | *OEM Quality*

200: Dink Eu3 i 06-07
R.O: 00169238 • 3051A-LEA6-900



246010172

Di primo equipaggiamento | *OEM Quality*

200: Agility R16 10 • Agility R16 12 • Like i 09 Like LX 12
R.O: 00130026



MALAGUTI

246010040

50: Centro SL 94-98 • F10 Jet Line 92-98
R.O. 02403000



246010082

Lunghezza cavo 40 cm | *Cable lenght 40 cm*

125: Madison 3 06-09
180: Madison R 01-02
200: Madison S RST Eu2 03 • Madison S RST 02 • Phantom Max 03
250: Madison RS RST 04 • Phantom Max 04
R.O. 02410400



246010092

Di primo equipaggiamento | *OEM Quality*

250: Madison S 99-01
R.O. 02404800



246010132

Di primo equipaggiamento | *OEM Quality*

250: Madison 3 06-09
500: Spidermax GT 04-06
R.O. 02412300





BOBINE

COILS

MBK

246010040

50: Booster Naked • Booster Spirit • Booster • Booster Road • Booster NG • Booster Rocket • Booster Track • Stunt 00-02 • Forte Che-Ita 94-96 • Evolis 92-95 • Flipper 99-04 • Fizz 94-95 • Ovetto 97-04 • Nitro Jaguar 04 • Nitro Eu2 03 • Nitro 99-04
R.O. 3KJ823101000



246010092

Di primo equipaggiamento | *OEM Quality*
250: Skyliner ABS 03
250: Skyliner ABS 03 • Skyliner 00-03
R.O. 4HC823100000



PEUGEOT

246010132

Di primo equipaggiamento | *OEM Quality*

300: Geopolis
400: Satelis • Geopolis



246010142

Di primo equipaggiamento | *OEM Quality*
Lunghezza cavo 30 cm | *Cable lenght 30 cm*
50: Elyseo • Looxor (Modello a carburatore - *Carburetor model*) • Ludix • Snake • Ludix Classic • Ludix Elegant • Metal-X >97 • Squab >97 • Trekker 04 • TRK2 WRC >97 • X-Fight 04 • Zenith L >97
100: Elyseo • Looxor (Modello a carburatore - *Carburetor model*) • Speedfight • Trekker
R.O. 738724





PIAGGIO

246010010

50: Sfera RST 95-97 • Zip 92-96
125: Hexagon 94-97 • Hexagon LX-LXT 98-99 • Hexagon LX4 98-99 • Liberty 98-00 • Sfera 95-97 • Skipper 94-97 • Skipper LX 98-99 • Vespa ET4 96-98
150: Hexagon 94-97 • Skipper 94-97 • Skipper LX 98-99
180: Hexagon LX-LXT 98-99
R.O. 826115



246010082

Lunghezza cavo 40 cm | *Cable lenght 40 cm*
125-150-200: Beverly • Beverly RST • Hexagon GTX • Liberty 4T • MP3 • Sfera • Vespa ET4 • Vespa GTS • Vespa Granturismo • Vespa GTV • Vespa LX • Vespa LXV • X7 • X8 • X9
250-300-400-500: Beverly Cruiser • Beverly RST • Beverly Sport • MP3 • Vespa GT • Vespa GTS • Vespa GTV • X7 • X8 • X9 • X-Evo
R.O. 829337



246010132

Di primo equipaggiamento | *OEM Quality*
50: Fly • Vespa LX • Vespa S • Vespa Primavera • Vespa Sprint
125: Beverly RST • Liberty 4T • Vespa GTS • Vespa LX • Vespa LXV • Vespa S • X7 Evo
150: Vespa LX • Vespa S
250-300: Beverly Cruiser • Beverly Sport • Beverly Tourer • Carnaby • MP3 • Vespa GT60 • Vespa GTS • Vespa GTV • X-Evo • X7 • X8
400: Beverly • Beverly Tourer • MP3 • X-Evo • X8
500: Beverly • X9
R.O. 828817



SYM

246010162

Di primo equipaggiamento | *OEM Quality*
125-200: HD Eu2 • HD Eu3 • HD Evo • HD Evo (Modello freno a tamburo - *Drum brake model*) • Joyride
R.O 3051AH9A000



YAMAHA

246010040

50: BW'S Bump • BW'S Naked • BW'S Next Generation • BW'S Original • BW'S • Spy • DT R-X • Slider • Axis • Why • Breeze • Neo'S • Aerox
100: Neo'S • Aerox
125: Aerox • DT R • TT-R • TW • Teo'S • Majesty
150: Majesty
R.O. 3KJ823101000



246010092

Di primo equipaggiamento | *OEM Quality*
250: YP Majesty ABS 03 • YP Majesty Dx 98-99 • YP Majesty 96-03
R.O. 4HC823100000





BOBINE

COILS

Modello *Model*	CC	Da *From*	A *To*	Codice RMS *RMS Code*	Note *Notes*
APRILIA					
Sl 750 Shiver	750	2007	2016	**246010402**	
Sl 750 Shiver Gt	750	2009	2009	**246010402**	
Smv 750 Dorsoduro	750	2008	2016	**246010402**	
Smv 750 Dorsoduro Factory	750	2010	2013	**246010402**	
Smv 750 Dorsoduro Factory Abs	750	2010	2013	**246010402**	
BENELLI					
Tornado 1St Series	650	1971	-	**246010672**	
Tornado S 2Nd Series	650	1972	1976	**246010672**	
Cafe' Racer 899	899	2010	2010	**246010292**	
Century Racer 899	899	2010	2012	**246010292**	
Tnt 899	899	2007	2012	**246010292**	
Tnt 899 S	899	2008	2009	**246010292**	
Tre 899 K	899	2007	2012	**246010292**	
Tnt	1130	2004	2006	**246010292**	
Tnt Cafe' Racer	1130	2005	2011	**246010292**	
Tnt R 160	1130	2010	2014	**246010292**	
Tnt Sport	1130	2005	2009	**246010292**	
Tnt Titanium	1130	2005	2009	**246010292**	
Tornado Tre	1130	2007	2010	**246010292**	
Tre K	1130	2006	2012	**246010292**	
Tre K Amazonas	1130	2007	2011	**246010292**	
BMW					
C1 125 Scooter	125	2000	2003	**246010222**	
C1 200 Scooter	200	1999	2003	**246010222**	
R 27	250	1960	1966	**246010662**	
R 45	450	1978	1980	**246010262**	
R 45/N	450	1978	1980	**246010262**	
R 45/N	450	1978	1980	**246010662**	
R 50/5	500	1969	1975	**246010662**	
R 60/5	600	1969	1975	**246010662**	
R 60/6	600	1973	1977	**246010662**	
R 60/7	600	1976	1981	**246010662**	
R 60/7	600	1978	1980	**246010262**	
R 60/7 Tic	600	1978	1981	**246010662**	
F 650 Gs	650	1999	2003	**246010222**	
F 650 Gs	650	2006	2012	**246010342**	
F 650 Gs Dakar	650	1999	2003	**246010222**	
R 65	650	1978	1980	**246010262**	
R 65	650	1978	1980	**246010662**	
F 700 Gs	700	2011	2014	**246010342**	
R 75/5	750	1969	1975	**246010662**	
R 75/6	750	1973	1977	**246010662**	
R 75/7	750	1976	1979	**246010262**	
R 75/7	750	1976	1979	**246010662**	
F800 Gs	800	2006	2014	**246010342**	
F800 Gs Adv	800	2012	2014	**246010342**	
F800 Gt	800	2011	2014	**246010342**	
F800 R	800	2005	2014	**246010342**	
F800 S	800	2004	2010	**246010342**	
F800 St	800	2004	2012	**246010342**	
R 80	800	1977	1985	**246010662**	
R 80 Rt	800	1982	1985	**246010662**	
R 80 Rt	800	1984	1985	**246010662**	
R 80 Tic	800	1978	1985	**246010662**	
R 80/7	800	1975	1984	**246010662**	
R 80/7 N	800	1977	1980	**246010262**	
R 80/7 S	800	1977	1980	**246010262**	
R 850 C	850	1997	2000	**246010272**	



Modello *Model*	CC	Da *From*	A *To*	Codice RMS *RMS Code*	Note *Notes*
R 850 Gs	850	1996	2000	**246010272**	
R 850 R	850	1994	2007	**246010272**	
R 850 Rt	850	1996	2006	**246010272**	
R 90 S	900	1973	1977	**246010662**	
R 90/6	900	1973	1976	**246010662**	
R 900 Rt (05Sf, 10Sf)	900	2005	2013	**246010312**	Bobina Sx | *Left Coil*
R 900 Rt (05Sf, 10Sf)	900	2005	2013	**246010322**	Bobina Dx | *Right Coil*
R 100 Rs	980	1976	1980	**246010262**	
R 100 Rt	980	1978	1980	**246010262**	
R 100 S	980	1976	1980	**246010262**	
R 100 T	980	1978	1980	**246010262**	
R 100/7	980	1976	1980	**246010262**	
R 100	1000	1976	1977	**246010662**	
R 100 Cs	1000	1980	1985	**246010662**	
R 100 Rs	1000	1976	1985	**246010662**	
R 100 S	1000	1976	1981	**246010662**	
R 100 Tic Touring	1000	1981	1985	**246010662**	
R 100/T	1000	1978	1985	**246010662**	
R 1100 Gs	1100	1994	2006	**246010272**	
R 1100 R	1100	1993	2006	**246010272**	
R 1100 Rs	1100	1992	2001	**246010272**	
R 1100 Rt	1100	1993	2001	**246010272**	
R 1100 S	1100	1996	2002	**246010272**	
R 1100 S	1100	2003	2006	**246010332**	Bobina Sx-Dx | *Left-Right Coil*
R 1100 S Abs	1100	2001	2006	**246010332**	Bobina Sx-Dx | *Left-Right Coil*
R 1100 S Abs	1100	2003	2006	**246010272**	
R 1150 Gs	1150	1998	2003	**246010272**	
R 1150 Gs	1150	2002	2003	**246010332**	Bobina Sx-Dx | *Left-Right Coil*
R 1150 Gs Adv	1150	2001	2005	**246010272**	
R 1150 Gs Adv	1150	2002	2005	**246010332**	Bobina Sx-Dx | *Left-Right Coil*
R 1150 R	1150	1999	2006	**246010272**	
R 1150 R	1150	2001	2002	**246010272**	
R 1150 R	1150	2002	2006	**246010332**	Bobina Sx-Dx | *Left-Right Coil*
R 1150 R Rockster	1150	2002	2005	**246010332**	Bobina Sx-Dx | *Left-Right Coil*
R 1150 Rs	1150	2000	2004	**246010272**	
R 1150 Rs	1150	2002	2005	**246010332**	Bobina Sx-Dx | *Left-Right Coil*
R 1150 Rt	1150	2000	2006	**246010272**	
R 1150 Rt	1150	2002	2006	**246010332**	Bobina Sx-Dx | *Left-Right Coil*
Hp 2 Enduro	1200	2004	2006	**246010312**	Bobina Sx | *Left Coil*
Hp 2 Enduro	1200	2004	2006	**246010322**	Bobina Dx | *Right Coil*
Hp 2 Megamoto	1200	2006	2008	**246010312**	Bobina Sx | *Left Coil*
Hp 2 Megamoto	1200	2006	2008	**246010322**	Bobina Dx | *Right Coil*
K 1200 Gt	1200	2004	2008	**246010342**	
K 1200 R	1200	2004	2008	**246010342**	
K 1200 R Sport	1200	2005	2007	**246010342**	
K 1200 S	1200	2003	2008	**246010342**	
R 1200 C	1200	1996	2003	**246010272**	
R 1200 C Cruiser	1200	1993	2003	**246010272**	
R 1200 C Independent	1200	2000	2003	**246010272**	
R 1200 Gs	1200	2002	2009	**246010312**	Bobina Sx | *Left Coil*
R 1200 Gs	1200	2002	2009	**246010322**	Bobina Dx | *Right Coil*
R 1200 Gs Adv	1200	2005	2009	**246010312**	Bobina Sx | *Left Coil*
R 1200 Gs Adv	1200	2005	2009	**246010322**	Bobina Dx | *Right Coil*
R 1200 R	1200	2005	2014	**246010312**	Bobina Sx | *Left Coil*
R 1200 R	1200	2005	2014	**246010322**	Bobina Dx | *Right Coil*
R 1200 Rt	1200	2003	2014	**246010312**	Bobina Sx | *Left Coil*
R 1200 Rt	1200	2003	2014	**246010322**	Bobina Dx | *Right Coil*
R 1200 S	1200	2006	2008	**246010312**	Bobina Sx | *Left Coil*
R 1200 S	1200	2006	2008	**246010322**	Bobina Dx | *Right Coil*



BOBINE

COILS

Modello *Model*	**CC**	**Da** *From*	**A** *To*	**Codice RMS** *RMS Code*	**Note** *Notes*
R 1200 St	1200	2003	2007	**246010312**	Bobina Sx | *Left Coil*
R 1200 St	1200	2003	2007	**246010322**	Bobina Dx | *Right Coil*
K 1300 Gt	1300	2007	2010	**246010342**	
K 1300 R	1300	2007	2014	**246010342**	
K 1300 S	1300	2007	2014	**246010342**	
CAGIVA					
Sst	125	1980	1982	**246010672**	
Sst Hd Turismo	125	1979	-	**246010672**	
Sxt Hd	125	1980	1981	**246010672**	
Hd 4T	250	-	-	**246010672**	
DAELIM					
Sq 125	125	-	-	**246010462**	
Vj 125	125	2012	-	**246010452**	
DUCATI					
S	125	-	-	**246010662**	
Scrambler	125	-	-	**246010662**	
Sport	125	-	-	**246010662**	
Turismo	125	-	-	**246010662**	
Monza Junior	160	1967	-	**246010662**	
Ts Turismo	160	-	-	**246010662**	
T Turismo	175	1959	-	**246010662**	
Turismo	175	-	-	**246010662**	
Elite	200	-	-	**246010662**	
Ts Turismo	200	-	-	**246010662**	
Turismo	200	-	-	**246010662**	
24 Hours	250	-	-	**246010662**	
De Luxe	250	-	-	**246010662**	
Diana	250	-	-	**246010662**	
Gt	250	-	-	**246010662**	
Mach 1	250	-	-	**246010662**	
Mark 3	250	1968	1972	**246010662**	
Monza	250	-	-	**246010662**	
Monza Junior	250	1967	-	**246010662**	
Road	250	1975	-	**246010672**	
Road	250	-	-	**246010662**	
Scrambler	250	1968	1972	**246010662**	
Scrambler	250	1975	-	**246010672**	
Strada	250	1978	1983	**246010672**	
F3	350	1985	-	**246010672**	
Glt/Gtv/Sport/Desmo	350	1975	-	**246010672**	
Indiana	350	1985	1985	**246010672**	
Mark 3	350	-	-	**246010662**	
Road	350	1975	-	**246010672**	
Scrambler	350	1967	1972	**246010662**	
Scrambler	350	1975	-	**246010672**	
Sebring	350	-	1967	**246010662**	
Twin/Bilicilindriche/Desmo	350	-	-	**246010672**	
Vento	350	1976	1983	**246010672**	
F3	400	1985	-	**246010672**	
Desmo	450	-	-	**246010662**	
Mark 3	450	-	-	**246010662**	
Scrambler	450	1967	1972	**246010662**	
Glt/Gtv/Sport/Desmo	500	1975	-	**246010672**	
Twin/Bilicilindriche/Desmo	500	-	-	**246010672**	
Multistrada 620	620	2006	2006	**246010392**	
Multistrada 620 Dark	620	2006	2006	**246010392**	
Monster 695	695	2007	2008	**246010392**	
Monster 696	696	2008	2013	**246010392**	
Monster 696 Abs	696	2010	2014	**246010392**	



Modello *Model*	CC	Da *From*	A *To*	Codice RMS *RMS Code*	Note *Notes*
Monster 696 Abs Anniversary	696	2013	2013	**246010392**	
Monster 696 Anniversary	696	2013	2013	**246010392**	
Superbike 748	748	1995	2001	**246010282**	
Superbike 748 E	748	2001	2002	**246010282**	
Superbike 748 R	748	1999	1999	**246010282**	
Superbike 748 R Single-Seat	748	1998	1998	**246010282**	
Superbike 748 R Single-Seat	748	2001	2002	**246010282**	
Superbike 748 Rs	748	2000	2001	**246010282**	
Superbike 748 S	748	2000	2002	**246010282**	
Superbike 748 Sps	748	1998	1999	**246010282**	
Superbike 749	748	2003	2003	**246010252**	
Superbike 749 Dark	748	2004	2006	**246010252**	
Superbike 749 R	748	2004	2006	**246010252**	
Superbike 749 S	748	2003	2006	**246010232**	
Superbike 749 S	748	2003	2006	**246010252**	
Gt/Sport/S/Ss	750	1971	1974	**246010672**	
Supersport 750 S	750	2001	2002	**246010282**	
Supersport 750 Ss	750	1999	2002	**246010282**	
Monster 795	795	2012	2014	**246010392**	
Monster 795 Abs	795	2013	2014	**246010392**	
Monster 796	796	2011	2012	**246010392**	
Monster 796 - Dmt	796	2014	2014	**246010392**	
Monster 796 Abs	796	2011	2014	**246010392**	
Monster 796 Abs - Dmt	796	2014	2014	**246010392**	
Monster 796 Abs Anniversary	796	2013	2013	**246010392**	
Monster 796 Anniversary	796	2013	2013	**246010392**	
Hypermotard 796	800	2010	2012	**246010392**	
Monster S2r 800	800	2005	2007	**246010392**	
Monster S2r 800 Dark	800	2005	2006	**246010392**	
Hypermotard Hyperstrada	821	2013	2014	**246010252**	
Hypermotard Sp	821	2013	2014	**246010252**	
Hypermotard Sp 821	821	2013	2014	**246010252**	
Streetfighter 848	848	2013	2014	**246010372**	
Superbike 848 Evo	848	2013	2013	**246010372**	
Superbike 848 Evo Corse Se	848	2013	2013	**246010372**	
Streetfighter 848	850	2012	2012	**246010372**	
Superbike 848	850	2008	2010	**246010372**	
Superbike 848 Evo	850	2011	2012	**246010372**	
Superbike 848 Evo Corse Se	850	2012	2012	**246010372**	
Superbike 851	851	1991	1992	**246010282**	
Superbike 888	888	1994	1995	**246010282**	
Superbike 888 Sp5	888	1993	1993	**246010282**	
Superbike 899 Panigale Abs	899	2014	2014	**246010352**	
Superbike 907 I.e.	900	1990	1993	**246010282**	
Supersport 900 S	900	2002	2002	**246010282**	
Supersport 900 Ss	900	1998	2002	**246010282**	
Superbike 916	916	1994	1997	**246010282**	
Superbike 916 R	916	1997	1998	**246010282**	
Superbike 916 Senna	916	1994	1998	**246010282**	
Superbike 916 Sp	916	1994	1996	**246010282**	
Sport Touring St2	944	1997	2003	**246010282**	
Desmosedici 1000 Rr	989	2008	2008	**246010442**	
Sport Touring St4 S	996	2001	2005	**246010282**	
Sport Touring St4 S Abs	996	2003	2005	**246010282**	
Superbike 916 Sps	996	1997	1998	**246010282**	
Superbike 996 R	996	1999	2001	**246010282**	
Superbike 996 R Ii	996	2001	2001	**246010282**	
Superbike 996 Rs	996	2000	2001	**246010282**	
Superbike 996 S	996	2001	2001	**246010282**	



BOBINE

COILS

Modello *Model*	**CC**	**Da** *From*	**A** *To*	**Codice RMS** *RMS Code*	**Note** *Notes*
Superbike 996 Sps	996	1999	2000	**246010282**	
Superbike 996 Sps Ii	996	1999	1999	**246010282**	
Superbike 996 Sps Iii	996	2000	2000	**246010282**	
Superbike 998	998	2002	2003	**246010282**	
Superbike 998 Final Ed.	998	2004	2004	**246010282**	
Superbike 998 Matrix	998	2004	2004	**246010282**	
Superbike 998 Matrix Single-Se	998	2004	2004	**246010282**	
Superbike 998 R	998	2002	2002	**246010282**	
Superbike 998 Rs	998	2002	2003	**246010282**	
Superbike 998 S Bayliss	998	2002	2002	**246010282**	
Superbike 998 S Bostrom	998	2002	2002	**246010282**	
Superbike 999	998	2003	2006	**246010232**	
Superbike 999	998	2003	2006	**246010252**	
Superbike 999 R	998	2003	2006	**246010232**	
Superbike 999 R	998	2003	2006	**246010252**	
Superbike 999 R Usa	998	2005	2006	**246010252**	
Superbike 999 R Xerox	998	2006	2006	**246010252**	
Superbike 999 Rs	998	2004	2005	**246010282**	
Superbike 999 S	998	2003	2006	**246010252**	
Superbike 999 S Ama Replica	998	2007	2007	**246010252**	
Superbike 999 Usa	998	2005	2006	**246010252**	
Hypermotard 1100	1000	2008	2009	**246010242**	
Hypermotard 1100 S	1000	2008	2009	**246010242**	
Monster S2r 1000	1000	2006	2008	**246010242**	
Monster S4r	1000	2007	2008	**246010252**	
Monster S4rs	1000	2006	2008	**246010252**	
Monster S4rs Tricolore	1000	2008	2008	**246010252**	
Multistrada 1000	1000	2003	2003	**246010242**	
Sport Touring St3	1000	2004	2007	**246010242**	
Sport Touring St3 S Abs	1000	2006	2007	**246010242**	
Sportclassic Gt1000	1000	2007	2010	**246010242**	
Sportclassic Gt1000 Touring	1000	2009	2009	**246010242**	
Sportclassic Paul Smart	1000	2006	2006	**246010242**	
Sportclassic Sport 1000	1000	2007	2008	**246010242**	
Sportclassic Sport 1000 S	1000	2007	2009	**246010242**	
Sportclassic Sport 1000 Single-Se	1000	2006	2007	**246010242**	
Streetfighter S	1098	2013	2013	**246010252**	
Streetfighter S Usa	1098	2013	2013	**246010252**	
Hypermotard 1100 Evo	1100	2010	2012	**246010392**	
Hypermotard 1100 Evo Sp	1100	2010	2012	**246010392**	
Monster 1100	1100	2009	2010	**246010242**	
Monster 1100 Diesel Eur	1100	2013	2013	**246010392**	
Monster 1100 Evo Abs	1100	2012	2013	**246010392**	
Monster 1100 Evo Anniversary	1100	2013	2013	**246010392**	
Monster 1100 S	1100	2009	2010	**246010242**	
Monster 1100 S Abs	1100	2010	2010	**246010242**	
Multistrada 1100	1100	2007	2009	**246010242**	
Multistrada 1100 S	1100	2007	2009	**246010242**	
Streetfighter	1100	2010	2011	**246010252**	
Streetfighter S	1100	2010	2012	**246010252**	
Superbike 1098	1100	2007	2008	**246010252**	
Superbike 1098 S	1100	2007	2008	**246010252**	
Superbike 1098 S Tricolore	1100	2007	2008	**246010252**	
Superbike 1098 Usa	1100	2007	2008	**246010252**	
Superbike 1199 Panigale Abs Br	1198	2014	2014	**246010352**	
Superbike 1199 Panigale S Abs	1198	2014	2014	**246010352**	
Superbike 1199 Panigale R	1199	2013	2013	**246010352**	
Superbike 1199 Panigale Superl	1199	2014	2014	**246010352**	
Diavel	1200	2011	2013	**246010252**	



Modello *Model*	CC	Da *From*	A *To*	Codice RMS *RMS Code*	Note *Notes*
Diavel Amg Europe	1200	2013	2013	**246010252**	
Diavel Bra	1200	2012	2014	**246010252**	
Diavel Carbon	1200	2011	2013	**246010252**	
Diavel Carbon Bra	1200	2012	2014	**246010252**	
Diavel Carbon Fl	1200	2015	2015	**246010242**	
Diavel Cromo Europe	1200	2013	2013	**246010252**	
Diavel Fl	1200	2015	2015	**246010242**	
Diavel Strada	1200	2013	2014	**246010252**	
Diavel White Stripe	1200	2013	2014	**246010252**	
Monster 1200	1200	2014	2014	**246010242**	
Monster 1200 S	1200	2014	2014	**246010242**	
Multistrada 1200	1200	2010	2012	**246010252**	
Multistrada 1200 Abs	1200	2010	2012	**246010252**	
Multistrada 1200 Abs	1200	2013	2014	**246010242**	
Multistrada 1200 Abs - Dmb	1200	2014	2014	**246010242**	
Multistrada 1200 Abs - Dmt	1200	2014	2014	**246010242**	
Multistrada 1200 S Abs	1200	2010	2010	**246010252**	
Multistrada 1200 S Gt	1200	2013	2014	**246010242**	
Multistrada 1200 S Pikes Peak	1200	2012	2012	**246010252**	
Multistrada 1200 S Pikes Peak	1200	2013	2014	**246010242**	
Multistrada 1200 S Sport	1200	2011	2012	**246010252**	
Multistrada 1200 S Touring	1200	2010	2012	**246010252**	
Multistrada 1200 S Touring	1200	2013	2014	**246010242**	
Multistrada 1200 S Touring - Dmb	1200	2014	2014	**246010242**	
Multistrada 1200 S Touring - Dmt	1200	2014	2014	**246010242**	
Multistrada 1200 S Touring D-Air	1200	2014	2014	**246010242**	
Superbike 1098 R	1200	2008	2010	**246010252**	
Superbike 1098 R Bayliss	1200	2009	2009	**246010252**	
Superbike 1198	1200	2009	2011	**246010372**	
Superbike 1198 S	1200	2009	2010	**246010372**	
Superbike 1198 S Corse	1200	2010	2010	**246010372**	
Superbike 1198 Sp	1200	2011	2011	**246010372**	
Superbike 1199 Panigale	1200	2012	2013	**246010352**	
Superbike 1199 Panigale Abs	1200	2012	2014	**246010352**	
Superbike 1199 Panigale R	1200	2014	2014	**246010352**	
Superbike 1199 Panigale S	1200	2012	2013	**246010352**	
Superbike 1199 Panigale S Abs	1200	2012	2014	**246010352**	
Superbike 1199 Panigale S Tric	1200	2012	2013	**246010352**	
GILERA					
Giubileo normale/Extra	98	1959	1970	**246010662**	
Giubileo/Florida	98	-	-	**246010662**	
4V/5V Strada/FL Florida Speciale	124	-	-	**246010662**	
B Giubileo Sei giorni/Special	124	1959	1970	**246010662**	
Giubileo normale/Extra	124	1959	1970	**246010662**	
G Rossa Sport	125	-	-	**246010662**	
Giubileo /Extra	175	1960	1966	**246010662**	
B/Extra	200	1953	1969	**246010662**	
B/Extra	300	1953	1969	**246010662**	
HARLEY DAVIDSON					
Amf	250	-	-	**246010672**	
INNOCENTI					
Lambretta Ld Ii/Iii Ser. Avv. Elettrico	125	1956	1957	**246010672**	
Lambretta Ld Ii/Iii Ser. Avv. Elettrico	150	1956	1957	**246010672**	
Motofurgone Fli	175	-	1966	**246010672**	
Motofurgone Li	175	-	1966	**246010672**	
Motofurgone Fli	200	-	1966	**246010672**	
KTM					
990 Superduke R	990	2008	2013	**246010382**	



BOBINE

COILS

Modello *Model*	CC	Da *From*	A *To*	Codice RMS *RMS Code*	Note *Notes*
LAVERDA					
Or Atlas	600	1985	-	**246010672**	
Gt/Gts/S/Sf/Sf1/Sf2/Sf3/Sfc	650	1968	1977	**246010672**	
750 Gtl	750	1974	1979	**246010422**	
Gt/Gts/S/Sf/Sf1/Sf2/Sf3/Sfc	750	1968	1977	**246010672**	
MAICO					
125 Gs/6	125	1970	1983	**246010262**	
MOTO GUZZI					
Galletto Avviamento Elettrico	160	-	-	**246010662**	
Ercolino Avviamento Elettrico	192	-	-	**246010672**	
Galletto Avviamento Elettrico	192	-	-	**246010662**	
Galletto Avviamento Elettrico	192	-	-	**246010672**	
Lodola Gran Turismo	235	-	-	**246010662**	
Nuovo Falcone/C/Civile/Militare	500	1969	1976	**246010672**	
V 7/Carabinieri/Polizia/Pa	700	1967	-	**246010672**	
S	750	1974	-	**246010672**	
S 3	750	1975	-	**246010672**	
V 7 Special	750	1970	-	**246010672**	
V 7 Sport	750	1971	1973	**246010672**	
Le Mans I/Ii/Iii	850	1976	1984	**246010672**	
T	850	1975	1977	**246010672**	
T3/Base/California/T4	850	1979	1985	**246010672**	
T5 I/Ii/Iii Series	850	1983	1988	**246010672**	
T5 Polizia/Carabinieri/Pa	850	1985	1989	**246010672**	
V 7 Eldorado/California Police	850	1972	-	**246010672**	
V 7 Gt/Gt California	850	1972	-	**246010672**	
California Ii (Fino A Mot. Vt18785)	1000	1981	1987	**246010672**	
California Iii Carb./Carb. Carenato	1000	1988	1990	**246010672**	
G5	1000	1978	1985	**246010672**	
G5 V Civile/Pa	1000	1978	1985	**246010672**	
Gt	1000	1987	1993	**246010672**	
Le Mans Iv/V	1000	1984	1993	**246010672**	
S	1000	1989	1990	**246010672**	
V I-Confort Civile/Pa	1000	1975	1984	**246010672**	
MV AGUSTA					
GT/Sport	600	1967	1971	**246010672**	
Gt/Sport	750	1971	1974	**246010672**	
S Sport America	750	1975	1978	**246010672**	
Brutale 910	910	2005	2008	**246010302**	
Brutale 920	920	2010	2011	**246010302**	
Brutale 989 R	989	2008	-	**246010302**	
Brutale 990 R	990	2010	2011	**246010302**	
F4 1000 312R	1000	2007	2008	**246010302**	
F4 R	1000	2006	2007	**246010302**	
F4 S - R - Rr - Frecce Tricolore	1000	2010	2012	**246010302**	
F4 Veltro	1000	2008	2008	**246010302**	
Brutale 1078Rr	1078	2008	2008	**246010302**	
F4 100Cc	1078	2007	2007	**246010302**	
F4 1078 312Rr	1078	2007	2008	**246010302**	
Brutale 1090-1090R-1090Rr- Corsa	1090	2013	2013	**246010302**	
Brutale 1090Rr	1090	2010	2011	**246010302**	
Brutale R - Rr	1090	2012	2012	**246010302**	
PIAGGIO					
Vespa Lx 4T-4V	50	2009	2013	**246010412**	
Vespa Lx 4T-4V Touring	50	2010	2013	**246010412**	
Vespa Primavera 4T-4V	50	2013	2014	**246010412**	
Vespa S 4T-4V & College	50	2008	2012	**246010412**	
Vespa Sprint 4T 4V	50	2014	2014	**246010412**	



Modello *Model*	CC	Da *From*	A *To*	Codice RMS *RMS Code*	Note *Notes*
Beverly Rst 4T 4V ie Eu3	125	2010	2013	**246010412**	
Liberty 4T 2V ie Ptt - Ita	125	2012	2012	**246010412**	
Liberty 4T 3V ie Eu3	125	2013	2014	**246010412**	
Mp3 Ibrido	125	2009	2010	**246010362**	
Mp3 ie	125	2008	2009	**246010362**	
Mp3 ie Touring	125	2011	2012	**246010362**	
Vespa Gts 4T ie Super	125	2009	2014	**246010412**	
Vespa Lx 4T Eu3 Touring	125	2010	2011	**246010412**	
Vespa Lx Eur3 ie	125	2009	2011	**246010412**	
Vespa Lxv ie 4T	125	2010	2013	**246010412**	
Vespa S 4T ie & College	125	2009	2011	**246010412**	
X7 Evo Ie Eu3	125	2009	2010	**246010412**	
Liberty 4T 3V Lem	150	2013	2014	**246010412**	
Vespa Lx Eu3 ie	150	2009	2011	**246010412**	
Vespa Lx Touring	150	2010	2012	**246010412**	
Vespa S 4T ie & College	150	2009	2012	**246010412**	
Beverly Cruiser	250	2007	2009	**246010412**	
Beverly Eu3 Mic	250	2007	2007	**246010412**	
Beverly ie Eu3	250	2006	2008	**246010412**	
Beverly Sport	250	2006	2008	**246010412**	
Beverly Tourer Eu3	250	2008	2009	**246010412**	
Carnaby	250	2008	2008	**246010412**	
Mp3	250	2006	2008	**246010362**	
Mp3 Lt	250	2008	2009	**246010412**	
Mp3 Mic	250	2008	2009	**246010412**	
Vespa Gt 60 Eu3	250	2006	2007	**246010412**	
Vespa Gts	250	2005	2014	**246010412**	
Vespa Gts Abs	250	2005	2012	**246010412**	
Vespa Gtv	250	2006	2009	**246010412**	
Vespa Gtv 4T Navy Eu3	250	2007	2007	**246010412**	
X Evo	250	2007	2013	**246010412**	
X7 Eu3	250	2008	2008	**246010412**	
X8 Eu3	250	2005	2008	**246010412**	
Beverly Rst 4T 4V ie Eu3	300	2010	2014	**246010412**	
Beverly Tourer Eu3	300	2009	2010	**246010412**	
Carnaby Cruiser	300	2009	2012	**246010412**	
Mp3 300 ie Lt	300	2010	2011	**246010362**	
Mp3 300 ie Mic	300	2010	2011	**246010362**	
Mp3 4T 4V ie Erl Ibrido	300	2010	2013	**246010362**	
Mp3 4T 4V ie Lt Ibrido	300	2010	2011	**246010362**	
Mp3 Ie Lt-ie Lt Sport	300	2011	2013	**246010362**	
Mp3 Touring 300 ie	300	2011	2012	**246010362**	
Mp3 Touring Lt 300 ie	300	2011	2012	**246010362**	
Vaspa Gts ie Touring	300	2011	2012	**246010412**	
Vespa Gts ie	300	2012	2014	**246010412**	
Vespa Gts Super	300	2008	2014	**246010412**	
Vespa Gts Super Sport	300	2010	2013	**246010412**	
Vespa Gtv 4T 4V ie	300	2010	2013	**246010412**	
Vespa Gtv Via Montenapoleone	300	2010	2010	**246010412**	
X7 Evo ie E3	300	2009	2010	**246010412**	
Beverly Eu3	400	2006	2007	**246010412**	
Beverly Tourer Eu3	400	2008	2010	**246010412**	
Mp3	400	2007	2008	**246010362**	
Mp3 ie Lt - Mp3 ie Lt Sport	400	2008	2010	**246010412**	
Mp3 ie Lt Touring	400	2011	2011	**246010412**	
Mp3 Mic	400	2008	2010	**246010412**	
Mp3 Rl Touring	400	2011	2011	**246010412**	
X Evo	400	2007	2011	**246010412**	



BOBINE

COILS

Modello *Model*	**CC**	**Da** *From*	**A** *To*	**Codice RMS** *RMS Code*	**Note** *Notes*
X8 Eu3	400	2006	2008	**246010412**	
Ape Mp 190	500	-	-	**246010672**	
Beverly Eu3	500	2006	2008	**246010412**	
X9 Evolution	500	2006	2007	**246010412**	
X9 Evolution Abs	500	2006	2007	**246010412**	
Ape Mp 190	550	-	-	**246010672**	
Ape Mp 190	600	-	-	**246010672**	
TRIUMPH					
T 100 C Trophy Trail	500	-	-	**246010672**	
T 100 R Daytona	500	-	-	**246010672**	
T 140 V Bonneville	750	-	-	**246010672**	
Tr7v Tiger	750	-	-	**246010672**	
Twins	750	-	-	**246010672**	

246010222

BOBINA ZS030 | *ZS030 COIL*



246010242

BOBINA ZS056 | *ZS056 COIL*



246010252

BOBINA ZS085 | *ZS085 COIL*



246010272

BOBINA ZS224 | *ZS224 COIL*



246010282

BOBINA ZS284 | *ZS284 COIL*



246010292

BOBINA ZS377 | *ZS377 COIL*



246010302

BOBINA ZS378 | *ZS378 COIL*



246010312

BOBINA ZS383 | *ZS383 COIL*



246010322

BOBINA ZS384 | *ZS384 COIL*



246010332

BOBINA ZS385 | *ZS385 COIL*



246010342

BOBINA ZS386 | *ZS386 COIL*



246010352

BOBINA ZS439 | *ZS439 COIL*



BOBINE

COILS

246010362

BOBINA ZS440 | *ZS440 COIL*



246010372

BOBINA ZS441 | *ZS441 COIL*



246010382

BOBINA ZS443 | *ZS443 COIL*



246010392

BOBINA ZS057 | *ZS057 COIL*



246010402

BOBINA ZSE130 | *ZSE130 COIL*



246010412

BOBINA ZS078 | *ZS078 COIL*



246010422

BOBINA ZS106 | *ZS106 COIL*



246010442

BOBINA ZS444 | *ZS444 COIL*



246010452

BOBINA ZS523 | *ZS523 COIL*



246010462

BOBINA ZS524 | *ZS524 COIL*



246010632

BOBINA ZS117 12V | *ZS117 COIL*



246010642

BOBINA ZS118 12V | *ZS118 COIL*



246010652

BOBINA ZS210 AT ESTERNA 3V | *ZS210 COIL AT 3V*
Per Ducati Racing • MV Agusta Racing • Moto D'Epoca Racing | *For Ducati Racing • MV Agusta Racing • Moto D'Epoca Racing*



246010662

BOBINA ZS215 AT ESTERNA | *ZS215 COIL AT*
Per Impianti Marelli • Cagiva • Ducati • Laverda • Moto Guzzi | *For Impianti Marelli • Cagiva • Ducati • Laverda • Moto Guzzi*



246010672

BOBINA ZS220 | *ZS220 COIL*



246010682

BOBINA ZS283 | *ZS283 COIL*



246010692

BOBINA ZS400 12V | *ZS400 COIL*





REGOLATORI DI TENSIONE

REGULATORS

Modello *Model*	CC	Da *From*	A *To*	OEM	Codice RMS *RMS Code*
APRILIA					
Amico	50	1994	1998	AP8212799	**246030050**
Amico	50	1994	1998	AP8212799	**246030051**
Amico Gl-Gle	50	1993	1995	AP8212799	**246030050**
Amico Gl-Gle	50	1993	1995	AP8212799	**246030051**
Amico Lx- Sport-Cat	50	1992	1993	AP8212799	**246030050**
Amico Lx- Sport-Cat	50	1992	1993	AP8212799	**246030051**
Area 51	50	1998	2000	AP8212799	**246030050**
Area 51	50	1998	2000	AP8212799	**246030051**
Gulliver	50	1995	1998	AP8212799	**246030050**
Gulliver	50	1995	1998	AP8212799	**246030051**
Gulliver Lc	50	1996	1998	AP8212799	**246030050**
Gulliver Lc	50	1996	1998	AP8212799	**246030051**
Mojito Custom	50	1999	2003	AP8224102	**246030060**
Mojito Retro	50	1999	2003	AP8224102	**246030060**
Rally	50	1995	2003	AP8212799	**246030050**
Rally	50	1995	2003	AP8212799	**246030051**
Rally Liquid Cooled	50	1996	1999	AP8212799	**246030050**
Rally Liquid Cooled	50	1996	1999	AP8212799	**246030051**
Rs	50	2006	2010	864660	**246030360**
Rs4	50	2011	2013	898891	**246030370**
Rs4 Replica	50	2014	2016	898891	**246030370**
Rx	50	2014	2016	898891	**246030370**
Rx - Sx	50	2006	2010	864660	**246030360**
Rx - Sx	50	2011	2013	898891	**246030370**
Scarabeo	50	1993	2005	AP8212799	**246030050**
Scarabeo	50	1993	2005	AP8212799	**246030051**
Scarabeo 4T 4V	50	2010	2012	641788	**246030182**
Scarabeo 4T 4V	50	2014	2014	641788	**246030182**
Scarabeo 4T 4V Net	50	2009	2010	641788	**246030182**
Scarabeo Quattro	50	2009	2009	641788	**246030182**
Scarabeo Street	50	2005	2006	AP8127154	**246030152**
Sonic	50	1998	2007	AP8212799	**246030050**
Sonic	50	1998	2007	AP8212799	**246030051**
Sonic Gp	50	1998	2008	AP8212799	**246030050**
Sonic Gp	50	1998	2008	AP8212799	**246030051**
Sport City One 4T	50	2008	2010	639751	**246030182**
Sr	50	1993	1996	AP8212799	**246030050**
Sr	50	1993	1996	AP8212799	**246030051**
Sr H2O Ditech E Carburatore	50	2000	2004	AP8224102	**246030060**
Sr Liquid Cooled	50	1994	1996	AP8212799	**246030050**
Sr Liquid Cooled	50	1994	1996	AP8212799	**246030051**
Sr Motard 4T 4V	50	2013	2014	641788	**246030182**
Sr Stealth	50	1997	2000	AP8212799	**246030050**
Sr Stealth	50	1997	2000	AP8212799	**246030051**
Sr Street (Modello a carburatore - *Carburator model)*	50	2003	2012	AP8124648	**246030152**
Sr Street (Modello a iniezione - *Injection model)*	50	2003	2012	AP8127418	**246030162**
Sr Www	50	1997	2001	AP8212799	**246030050**
Sr Www	50	1997	2001	AP8212799	**246030051**
Sx	50	2014	2016	898891	**246030370**
Sx Limited Edition	50	2014	2016	898891	**246030370**
Scarabeo Motore Minarelli	100	2000	2000	AP8212799	**246030050**
Scarabeo Motore Minarelli	100	2000	2000	AP8212799	**246030051**
Scarabeo Motore Yamaha	100	2000	2000	AP8212799	**246030050**
Scarabeo Motore Yamaha	100	2000	2000	AP8212799	**246030051**
Atlantic	125	2003	2005	AP8127418	**246030162**
Atlantic Eu3 125-250	125	2006	2008	AP8127418	**246030162**
Mojito	125	2003	2008	AP8127418	**246030162**
Scarabeo	125	2003	2006	AP8127418	**246030162**
Scarabeo Motore Piaggio Eu3	125	2006	2006	AP8127418	**246030162**
Sport City	125	2004	2006	AP8127418	**246030162**
Sport City Euro3	125	2006	2008	AP8127418	**246030162**
Atlantic Eu3 125-250	250	2006	2008	AP8127809	**246030192**
Scarabeo Light	250	2006	2008	AP8127809	**246030192**
Sport City Euro3	250	2006	2008	AP8127809	**246030192**
Atlantic	500	2001	2004	AP8127205	**246030192**
Atlantic Sprint 400-500	500	2005	2008	AP8127205	**246030192**
Scarabeo	500	2003	2006	AP8127205	**246030192**
BENELLI					
Adiva 125-150	125	2001	2002	R51540081A0	**246030162**
Velvet 125-150	125	1999	2001	R51540101A0	**246030011**
Velvet 125-150	125	1999	2001	R51540101A0	**246030012**
Velvet Touring 125-150	125	2002	2003	R51540101A0	**246030011**
Velvet Touring 125-150	125	2002	2003	R51540101A0	**246030012**
Adiva 125-150	150	2001	2002	R51540081A0	**246030162**
Velvet 125-150	150	1999	2001	R51540101A0	**246030011**
Velvet 125-150	150	1999	2001	R51540101A0	**246030012**
Velvet	400	2003	2004	R51540081A0	**246030162**
DERBI					
Atlantis 2T	50	2010	2010	58096R	**246030152**
Atlantis 2T Eu2	50	2007	2009	58096R	**246030152**
Atlantis 4T Eu2	50	2007	2007	639751	**246030182**
Atlantis O2	50	2002	2002	58096R	**246030152**
Atlantis O2 Bullet	50	2003	2005	58096R	**246030152**
Atlantis O2 City	50	2003	2006	58096R	**246030152**
Atlantis O2 Red Bullet	50	2003	2003	58096R	**246030152**
Atlantis O2 Two Chic	50	2005	2005	58096R	**246030152**
Boulevard 2T	50	2009	2014	58096R	**246030162**
Boulevard 4T Eu2 25 Km/H	50	2009	2009	639751	**246030182**
Gp1	50	2001	2003	58096R	**246030152**
Gp1 E2	50	2003	2003	58096R	**246030152**
Gp1 Euro2	50	2005	2005	58096R	**246030152**
Gp1 Open Eu2	50	2006	2009	58096R	**246030152**
Gpr 2T	50	2013	2013	898891	**246030370**
Gpr 2T Eu2	50	2009	2010	864660	**246030360**
Gpr Replica	50	1999	2001	00H01004841	**246030360**
Gpr Replica Racing	50	2002	2003	00H01004841	**246030360**
Senda Black Edition	50	2003	2003	00H01005841	**246030350**
Senda Hyp Drd Evo Eu2	50	2008	2009	864660	**246030360**
Senda Hyp Drd Evo Limited Edition Eu2	50	2008	2008	864660	**246030360**
Senda R	50	2000	2001	00H01004841	**246030360**
Senda R Drd - Black Devil 2A Edizione	50	2003	2003	00H01004841	**246030360**
Senda R Drd Eu1 Eu1R	50	2002	2002	00H01004841	**246030360**
Senda R Drd Pro Eu2	50	2005	2011	864660	**246030360**
Senda R Drd Racing	50	2004	2005	00H01007841	**246030350**
Senda R Drd Racing Eu2	50	2005	2008	864660	**246030360**
Senda R Drd Racing Ltd	50	2005	2005	00H01007841	**246030350**
Senda R Drd X-Treme 2T Eu2	50	2014	2015	898891	**246030370**
Senda R Drd X-Treme 2T Euro2	50	2010	2012	898891	**246030370**
Senda R Racer	50	2003	2003	00H01004841	**246030360**
Senda R X Trem Eu2	50	2008	2008	864660	**246030360**
Senda R X-Race	50	2004	2004	00H01005841	**246030350**
Senda R X-Race 2T Eu2	50	2010	2010	898891	**246030370**



Modello *Model*	CC	Da *From*	A *To*	OEM	Codice RMS *RMS Code*
Senda R X-Race Eu2	50	2007	2009	864660	**246030360**
Senda R X-Trem	50	2003	2003	00H01004841	**246030360**
Senda R X-Trem 2T Eu2	50	2010	2010	898891	**246030370**
Senda R X-Trem Eu2	50	2004	2004	00H01005841	**246030350**
Senda Sm	50	2000	2001	00H01004841	**246030360**
Senda Sm Drd Edition Black	50	2005	2005	00H01007841	**246030350**
Senda Sm Drd Eu1 Eu1R	50	2002	2003	00H01004841	**246030360**
Senda Sm Drd Pro Eu2	50	2005	2011	864660	**246030360**
Senda Sm Drd Pro Eu2 2Ver	50	2005	2008	864660	**246030360**
Senda Sm Drd Racing	50	2004	2005	00H01007841	**246030350**
Senda Sm Drd Racing 2T Euro2	50	2010	2013	898891	**246030370**
Senda Sm Drd Racing Eu2	50	2005	2008	864660	**246030360**
Senda Sm Drd Racing Ltd	50	2005	2005	00H01007841	**246030350**
Senda Sm Drd X-Treme 2T Eu2	50	2014	2017	898891	**246030370**
Senda Sm Drd X-Treme 2T Eu2 Limited Ed	50	2014	2015	898891	**246030370**
Senda Sm X Trem Eu2	50	2008	2008	864660	**246030360**
Senda Sm X-Race	50	2004	2004	00H01007841	**246030350**
Senda Sm X-Race 2T Eu2	50	2010	2010	864660	**246030360**
Senda Sm X-Race Eu2	50	2007	2009	864660	**246030360**
Senda Sm X-Race Eu2 2Ver	50	2007	2009	864660	**246030360**
Senda Sm X-Trem	50	2002	2003	00H01004841	**246030360**
Senda Sm X-Trem 2T Eu2	50	2010	2010	898891	**246030370**
Senda Sm X-Trem Eu2	50	2004	2006	00H01005841	**246030350**
Senda Sm X-Trem Eu2 2A Edizione	50	2005	2005	00H01007841	**246030350**
Sonar 2T	50	2009	2009	58096R	**246030162**
Variant Sport 2T	50	2012	2012	58096R	**246030162**
Boulevard 4T	100	2010	2011	641788	**246030182**
Boulevard 125-150	125	2002	2004	82501R	**246030162**
Boulevard 125-150 Eu2	125	2004	2007	486062	**246030162**
Gp1 Eu2	125	2006	2006	486062	**246030162**
Gp1 Low Seat 125 Eu3	125	2007	2008	486062	**246030162**
Gpr 4T	125	2009	2010	486062	**246030162**
Mojito Retro' - Custom	125	1999	2001	AP8124648	**246030152**
Mulhacen 4T Eu3	125	2010	2010	486062	**246030162**
Senda R-Sm Drd Racing 4T	125	2009	2009	486062	**246030162**
Terra 4T Eu3 - 4T Adventure	125	2007	2009	486062	**246030162**
Boulevard 125-150	150	2003	2004	486062	**246030162**
Boulevard 125-150 Eu2	150	2004	2007	486062	**246030162**
Boulevard Eu2	200	2005	2006	486062	**246030162**
Gp1	250	2006	2007	486062	**246030162**
Gp1 Low Seat 250 Eu3	250	2007	2008	584533	**246030192**
Rambla 125-250	250	2008	2009	58086R	**246030192**
Rambla 125-250 E3 2Ver	250	2008	2008	58086R	**246030192**
Rambla	300	2010	2011	58086R	**246030192**
GILERA					
Easy Moving	50	1995	1996	2940165	**246030040**
Easy Moving	50	1995	1996	2940165	**246030042**
Gp1 Race Eu2	50	2005	2007	58096R	**246030152**
Rcr	50	2003	2003	00H01004841	**246030360**
Rcr	50	2006	2007	898891	**246030370**
Rcr (Che-Syc)	50	2011	2015	898891	**246030370**
Runner Purejet	50	2005	2007	58090R	**246030162**
Runner Purejet	50	2010	2011	58090R	**246030162**
Runner Purejet St	50	2008	2008	58090R	**246030162**
Runner Sp	50	2005	2007	58096R	**246030152**
Runner Sp	50	2010	2012	58096R	**246030152**
Runner Sp Special Edition	50	2007	2007	58096R	**246030152**

Modello *Model*	CC	Da *From*	A *To*	OEM	Codice RMS *RMS Code*
Runner Sp St & Simoncelli	50	2008	2009	58096R	**246030152**
Smt	50	2003	2003	00H01004841	**246030360**
Smt	50	2006	2006	898891	**246030370**
Smt	50	2013	2017	898891	**246030370**
Smt (Aus-Fra-Fin)	50	2011	2012	864660	**246030360**
Smt Racing	50	2011	2012	898891	**246030370**
Stalker	50	1997	2004	2940165	**246030040**
Stalker	50	1997	2004	2940165	**246030042**
Stalker	50	2005	2011	58096R	**246030152**
Stalker Naked	50	2008	2008	58096R	**246030152**
Stalker Special Edition	50	2007	2008	58096R	**246030152**
Storm	50	1994	1995	2940165	**246030040**
Storm	50	1994	1995	2940165	**246030042**
Storm Euro2	50	2007	2007	58096R	**246030152**
Typhoon	50	1994	1997	2940165	**246030040**
Typhoon	50	1994	1997	2940165	**246030042**
Nexus Euro3	125	2007	2008	58090R	**246030162**
Runner 4T St Euro3	125	2008	2016	58090R	**246030162**
Runner Vx	125	2005	2006	58090R	**246030162**
Runner Vx 4T Euro3	125	2006	2007	58090R	**246030162**
Runner Vx Race	125	2006	2006	58090R	**246030162**
Runner Vx Sc	125	2006	2007	58090R	**246030162**
Runner Vxr	200	2005	2006	58090R	**246030162**
Runner Vxr 4T St Euro3	200	2008	2011	58090R	**246030162**
Runner Vxr Euro3	200	2007	2007	58090R	**246030162**
Runner Vxr Race	200	2005	2006	58090R	**246030162**
HONDA					
Sh 50 Scoopy	50	1996	2000	31600-GBL-871	**246030060**
Sj 50 Bali	50	1995	1995	31600-GBL-871	**246030060**
Sh 100 Scoopy	100	1996	2001	31600-GBL-871	**246030060**
Sj 100 Bali Ex	100	1996	2000	31600-GBL-871	**246030060**
Fes 125 Pantheon	125	1998	2002	31600-KGF-860	**246030100**
Fes 125 Pantheon	125	1998	2002	31600-KGF-860	**246030102**
Nes 125 @/ Arobase	125	2000	2002	31600-KGF-860	**246030100**
Nes 125 @/ Arobase	125	2000	2002	31600-KGF-860	**246030102**
Nsr 125 F	125	1988	1992	31600-KR1-761	**246030212**
Nsr 125 R	125	1985	1987	31600-KR1-761	**246030212**
Pes 125 Ps I	125	2006	2013	31600-KTF-841	**246030241**
Pes 125 Ps I	125	2006	2013	31600-KTF-841	**246030242**
Ses 125 Dylan	125	2002	2006	31600-KGF-860	**246030100**
Ses 125 Dylan	125	2002	2006	31600-KGF-860	**246030102**
Sh 125	125	2001	2004	31600-KGF-860	**246030100**
Sh 125	125	2001	2004	31600-KGF-860	**246030102**
Sh 125 D I	125	2009	2009	31600-KTF-841	**246030241**
Sh 125 D I	125	2009	2009	31600-KTF-841	**246030242**
Sh 125 I	125	2005	2013	31600-KTF-841	**246030241**
Sh 125 I	125	2005	2013	31600-KTF-841	**246030242**
Xl 125 V Varadero	125	2001	2006	31600-KGF-860	**246030100**
Xl 125 V Varadero	125	2001	2006	31600-KGF-860	**246030102**
Xl 125 V Varadero 80 Km/H	125	2001	2006	31600-KGF-860	**246030100**
Xl 125 V Varadero 80 Km/H	125	2001	2006	31600-KGF-860	**246030102**
Fes 150 Pantheon	150	1998	2002	31600-KGF-860	**246030100**
Fes 150 Pantheon	150	1998	2002	31600-KGF-860	**246030102**
Nes 150 @/ Arobase	150	2000	2006	31600-KGF-860	**246030100**
Nes 150 @/ Arobase	150	2000	2006	31600-KGF-860	**246030102**
Pes 150 Ps I	150	2006	2010	31600-KTF-841	**246030241**
Pes 150 Ps I	150	2006	2010	31600-KTF-841	**246030242**
Sh 150	150	2001	2004	31600-KGF-860	**246030100**



REGOLATORI DI TENSIONE

REGULATORS

Modello *Model*	CC	Da *From*	A *To*	OEM	Codice RMS *RMS Code*
Sh 150	150	2001	2004	31600-KGF-860	**246030102**
Sh 150 D I	150	2009	2011	31600-KTF-841	**246030241**
Sh 150 D I	150	2009	2011	31600-KTF-841	**246030242**
Sh 150 I	150	2005	2008	31600-KTF-841	**246030241**
Sh 150 I	150	2005	2008	31600-KTF-841	**246030242**
Nss 250 A Jazz Abs	250	2001	2002	31600-KGF-860	**246030100**
Nss 250 A Jazz Abs	250	2001	2002	31600-KGF-860	**246030102**
Nss 250 Jazz	250	2001	2001	31600-KGF-860	**246030100**
Nss 250 Jazz	250	2001	2001	31600-KGF-860	**246030102**
Cbf 500	500	2004	2008	31600-KGF-860	**246030100**
Cbf 500	500	2004	2008	31600-KGF-860	**246030102**
Cbf 500 A Abs	500	2004	2008	31600-KGF-860	**246030100**
Cbf 500 A Abs	500	2004	2008	31600-KGF-860	**246030102**
Cb 600 F Hornet	600	2002	2006	31600-KGF-860	**246030100**
Cb 600 F Hornet	600	2002	2006	31600-KGF-860	**246030102**
Cb 600 S F2 Hornet S	600	2002	2003	31600-KGF-860	**246030100**
Cb 600 S F2 Hornet S	600	2002	2003	31600-KGF-860	**246030102**
Cb 600 S F2 Hornet S	600	2002	2003	31600-KGF-860	**246030102**
Cbf 600 N	600	2004	2007	31600-KGF-860	**246030100**
Cbf 600 N	600	2004	2007	31600-KGF-860	**246030102**
Cbf 600 Na Abs	600	2004	2007	31600-KGF-860	**246030100**
Cbf 600 Na Abs	600	2004	2007	31600-KGF-860	**246030102**
Cbf 600 S	600	2004	2007	31600-KGF-860	**246030100**
Cbf 600 S	600	2004	2007	31600-KGF-860	**246030102**
Cbf 600 Sa Abs	600	2004	2007	31600-KGF-860	**246030100**
Cbf 600 Sa Abs	600	2004	2007	31600-KGF-860	**246030100**
Cbf 600 Sa Abs	600	2004	2007	31600-KGF-860	**246030102**
Vt 750 C2 Shadow Aero	750	2001	2002	31600-KGF-860	**246030100**
Vt 750 C2 Shadow Aero	750	2001	2002	31600-KGF-860	**246030102**
KAWASAKI					
J125 Abs Bgf-Bgfa	125	2016	2016	21066Y003	**246030312**
J125 Abs Chf-Chfa	125	2017	2017	21066Y003	**246030312**
J125 Agf-Agfa	125	2016	2016	21066Y003	**246030312**
J300 Abs Bef-Befa-Bff-Bffa	300	2014	2015	21066Y003	**246030312**
J300 Abs Bgf-Bgfa	300	2016	2016	21066Y003	**246030312**
J300 Abs Chf-Chfa	300	2017	2017	21066Y003	**246030312**
J300 Aef-Aefa-Aff-Affa	300	2014	2015	21066Y003	**246030312**
J300 Agf-Agfa	300	2016	2016	21066Y003	**246030312**
KYMCO					
Agility 4T R10	50	2006	2008	00169119	**246030070**
Agility 4T R10	50	2006	2008	00169004	**246030072**
Agility 4T R12	50	2007	2008	00169237	**246030070**
Agility 4T R12	50	2007	2008	00169237	**246030072**
Agility 4T R16	50	2008	2009	00131033	**246030132**
Agility R12	50	2005	2005	00169119	**246030070**
Agility R12	50	2005	2005	00169119	**246030072**
Agility Rs	50	2009	2009	00131033	**246030132**
B&W	50	2002	2002	00169004	**246030070**
B&W	50	2002	2002	00169004	**246030072**
B&W Euro2	50	2003	2003	00169004	**246030070**
B&W Euro2	50	2003	2003	00169004	**246030072**
Cx	50	1993	1993	00169004	**246030070**
Cx	50	1993	1993	00169004	**246030072**
Cx Super	50	1994	1997	00169004	**246030070**
Cx Super	50	1994	1997	00169004	**246030072**
Dink 50 4T	50	2007	2007	00169004	**246030070**
Dink 50 4T	50	2007	2007	00169004	**246030072**
Dink Classic Euro2	50	2003	2003	00169004	**246030070**

Modello *Model*	CC	Da *From*	A *To*	OEM	Codice RMS *RMS Code*
Dink Classic Euro2	50	2003	2003	00169004	**246030072**
Dink Lc	50	1998	2002	00169004	**246030070**
Dink Lc	50	1998	2002	00169004	**246030072**
Dj W	50	1994	2000	00169004	**246030070**
Dj W	50	1994	2000	00169004	**246030072**
Dj X	50	1991	1992	00169004	**246030070**
Dj X	50	1991	1992	00169004	**246030072**
Dj Y	50	1993	1993	00169004	**246030070**
Dj Y	50	1993	1993	00169004	**246030072**
Fever Zx	50	1999	2000	00169004	**246030070**
Fever Zx	50	1999	2000	00169004	**246030072**
Fever Zx Euro2	50	2003	2004	00169004	**246030070**
Fever Zx Euro2	50	2003	2004	00169004	**246030072**
Filly	50	1998	2000	00169004	**246030070**
Filly	50	1998	2000	00169004	**246030072**
Filly Lx	50	2001	2002	00169004	**246030070**
Filly Lx	50	2001	2002	00169004	**246030072**
Heroism	50	1995	1997	00169004	**246030070**
Heroism	50	1995	1997	00169004	**246030072**
K 12	50	1995	2000	00169004	**246030070**
K 12	50	1995	2000	00169004	**246030072**
Kb	50	1995	2000	00169004	**246030070**
Kb	50	1995	2000	00169004	**246030072**
Mxer	50	2002	2003	00169004	**246030070**
Mxer	50	2002	2003	00169004	**246030072**
Mxer Euro2	50	2004	2004	00169004	**246030070**
Mxer Euro2	50	2004	2004	00169004	**246030072**
People	50	1999	2000	00169004	**246030070**
People	50	1999	2004	00169004	**246030072**
People	50	2004	2004	00169004	**246030070**
People Euro2	50	2003	2003	00169004	**246030070**
People Euro2	50	2003	2003	00169004	**246030072**
People Euro2	50	2008	2008	00169004	**246030070**
People Euro2	50	2008	2008	00169004	**246030072**
People S 4T	50	2006	2008	00169119	**246030070**
People S 4T	50	2006	2008	00169119	**246030072**
Sniper	50	1993	1993	00169004	**246030070**
Sniper	50	1993	1993	00169004	**246030072**
Sniper Dd	50	1994	1996	00169004	**246030070**
Sniper Dd	50	1994	1996	00169004	**246030072**
Super 8	50	2007	2007	00131026	**246030122**
Super 8 2T	50	2013	2013	00168783	**246030172**
Super 8 4T	50	2009	2009	00131026	**246030122**
Super 8 4T	50	2013	2013	00168783	**246030172**
Super 9	50	2000	2000	00169004	**246030070**
Super 9	50	2000	2000	00169004	**246030072**
Super 9 Sport Euro2	50	2003	2004	00169004	**246030070**
Super 9 Sport Euro2	50	2003	2004	00169004	**246030072**
Top Boy	50	1997	2000	00169004	**246030070**
Top Boy	50	1997	2000	00169004	**246030072**
Vitality 2T	50	2004	2004	00169004	**246030070**
Vitality 2T	50	2004	2004	00169004	**246030072**
Vitality 4T	50	2004	2004	00169004	**246030070**
Vitality 4T	50	2004	2004	00169004	**246030072**
Yup	50	2002	2002	00169004	**246030070**
Yup	50	2002	2002	00169004	**246030072**
Yup Euro2	50	2003	2003	00169004	**246030070**
Yup Euro2	50	2003	2003	00169004	**246030072**



Modello *Model*	CC	Da *From*	A *To*	OEM	Codice RMS *RMS Code*
Agility 4T	125	2006	2006	00169119	**246030070**
Agility 4T	125	2006	2006	00169119	**246030072**
Agility 4T Euro3	125	2006	2008	00169119	**246030070**
Agility 4T Euro3	125	2006	2008	00169119	**246030072**
Agility Plus E4	125	2016	2016	00168783	**246030172**
Agility R16	125	2008	2009	00131033	**246030132**
Agility Rs	125	2009	2009	00131033	**246030132**
B&W 125-150	125	2000	2000	00168780	**246030081**
B&W 125-150 Euro2	125	2003	2004	00168780	**246030081**
B&W 125-150 Euro2	125	2003	2004	00168780	**246030082**
Dink 125 Euro3	125	2006	2007	00168783	**246030172**
Dink 125-150	125	1997	1998	00168780	**246030081**
Dink 125-150	125	1997	1998	00168780	**246030082**
Dink Classic 125-150	125	2002	2002	00168780	**246030081**
Dink Classic 125-150	125	2002	2002	00168780	**246030082**
Dink Classic 125-150 Euro2	125	2003	2003	00168780	**246030081**
Dink Classic 125-150 Euro2	125	2003	2003	00168780	**246030082**
Dink Lx 125-150	125	1998	2000	00168780	**246030081**
Dink Lx 125-150	125	1998	2000	00168780	**246030082**
Downtown 125I	125	2009	2016	00177005	**246030142**
G-Dink	125	2012	2012	00131128	**246030342**
Grand Dink 125-150	125	2001	2002	00168780	**246030081**
Grand Dink 125-150	125	2001	2002	00168780	**246030082**
Grand Dink 125-150 Euro2	125	2003	2004	00168780	**246030081**
Grand Dink 125-150 Euro2	125	2003	2004	00168780	**246030082**
Heroism	125	1995	1997	00168780	**246030081**
Heroism	125	1995	1997	00168780	**246030082**
K-Xct I	125	2012	2014	00131148	**246030302**
Movie	125	1999	2000	00169004	**246030070**
Movie	125	1999	2000	00169004	**246030072**
Movie 125 Euro3	125	2006	2007	00169004	**246030070**
Movie 125 Euro3	125	2006	2007	00169004	**246030072**
Movie Xl 125-150	125	2001	2001	00169004	**246030070**
Movie Xl 125-150	125	2001	2001	00169004	**246030072**
Movie Xl 125-150 Euro2	125	2003	2004	00169004	**246030070**
Movie Xl 125-150 Euro2	125	2003	2004	00169004	**246030072**
People 125-150	125	1999	2000	00169004	**246030070**
People 125-150	125	1999	2000	00169004	**246030072**
People Euro3	125	2007	2008	00169004	**246030070**
People Euro3	125	2007	2008	00169004	**246030072**
People Gti	125	2010	2010	00177005	**246030142**
People Gti	125	2014	2014	00177005	**246030142**
People One E4	125	2016	2016	00168783	**246030172**
People One I	125	2013	2013	00168783	**246030172**
People One I Dd	125	2015	2015	00168783	**246030172**
People S	125	2005	2005	00169587	**246030122**
Quannon	125	2008	2008	00168783	**246030172**
Quannon Naked	125	2010	2010	00168783	**246030172**
Vivio 125-150	125	2000	2000	00169004	**246030070**
Vivio 125-150	125	2000	2000	00169004	**246030072**
Agility R16	150	2008	2008	00131033	**246030132**
B&W 125-150	150	2000	2000	00168780	**246030081**
B&W 125-150	150	2000	2000	00168780	**246030082**
B&W 125-150 Euro2	150	2003	2004	00168780	**246030081**
B&W 125-150 Euro2	150	2003	2004	00168780	**246030082**
Dink 125-150	150	1997	1998	00168780	**246030081**
Dink 125-150	150	1997	1998	00168780	**246030082**
Dink Classic 125-150	150	2002	2002	00168780	**246030081**

Modello *Model*	CC	Da *From*	A *To*	OEM	Codice RMS *RMS Code*
Dink Classic 125-150	150	2002	2002	00168780	**246030082**
Dink Classic 125-150 Euro2	150	2003	2003	00168780	**246030081**
Dink Classic 125-150 Euro2	150	2003	2003	00168780	**246030082**
Dink Lx 125-150	150	1998	2000	00168780	**246030081**
Dink Lx 125-150	150	1998	2000	00168780	**246030082**
Grand Dink 125-150	150	2001	2002	00168780	**246030081**
Grand Dink 125-150 Euro2	150	2003	2004	00168780	**246030081**
Grand Dink 125-150 Euro2	150	2003	2004	00168780	**246030082**
Heroism	150	1995	1997	00168780	**246030081**
Heroism	150	1995	1997	00168780	**246030082**
Movie 150 Euro3	150	2006	2007	00169119	**246030070**
Movie 150 Euro3	150	2006	2007	00169119	**246030072**
Movie Xl 125-150	150	2001	2001	00169004	**246030070**
Movie Xl 125-150	150	2001	2001	00169004	**246030072**
Movie Xl 125-150 Euro2	150	2003	2004	00169004	**246030070**
Movie Xl 125-150 Euro2	150	2003	2004	00169004	**246030072**
People 125-150 Euro2	150	2003	2003	00169004	**246030070**
People 125-150 Euro2	150	2003	2003	00169004	**246030072**
Zing 125-150	150	1997	1998	00172385	**246030212**
Agility 200I R16	200	2010	2010	00168783	**246030172**
Agility I Plus	200	2014	2014	00168783	**246030172**
Agility R16	200	2012	2012	00168783	**246030172**
Dink Classic	200	2004	2004	00168780	**246030081**
Dink Classic	200	2004	2004	00168780	**246030082**
Dink Euro3I	200	2006	2007	00177005	**246030142**
Downtown I	200	2010	2010	00177005	**246030142**
Like 200I	200	2009	2009	00168783	**246030172**
Like Lx	200	2012	2012	00168783	**246030172**
People Gti	200	2010	2010	00177005	**246030142**
People Gti	200	2014	2014	00177005	**246030142**
People S	200	2005	2005	00169587	**246030122**
People S 200I	200	2007	2007	00168780	**246030081**
People S 200I	200	2007	2007	00168780	**246030082**
B&W	250	2000	2000	00168780	**246030081**
B&W	250	2000	2000	00168780	**246030082**
B&W Euro2	250	2003	2003	00168780	**246030081**
B&W Euro2	250	2003	2003	00168780	**246030082**
Grand Dink	250	2001	2002	00168780	**246030081**
Grand Dink	250	2001	2002	00168780	**246030082**
Grand Dink Euro2	250	2003	2004	00168780	**246030081**
Grand Dink Euro2	250	2003	2004	00168780	**246030082**
People Lc	250	2003	2004	00168780	**246030081**
People Lc	250	2003	2004	00168780	**246030082**
People S	250	2006	2006	00168139	**246030112**
People S 250I	250	2007	2007	00177005	**246030142**
Venox	250	2002	2003	00177005	**246030142**
Venox Euro2	250	2004	2004	00177005	**246030142**
Venox Euro3	250	2007	2007	00177005	**246030142**
X Citing	250	2005	2005	00168780	**246030081**
X Citing	250	2005	2005	00168780	**246030082**
X Citing I	250	2006	2007	00177005	**246030142**
Yup	250	2003	2003	00168780	**246030081**
Yup	250	2003	2003	00168780	**246030082**
Downtown 300I	300	2009	2009	00177005	**246030142**
Downtown Abs	300	2010	2010	00177005	**246030142**
Downtown Abs I	300	2011	2016	00177005	**246030142**
Downtown I	300	2011	2011	00177005	**246030142**
G-Dink	300	2012	2012	00131128	**246030342**



REGOLATORI DI TENSIONE

REGULATORS

Modello *Model*	CC	Da *From*	A *To*	OEM	Codice RMS *RMS Code*
K-Xct I	300	2012	2012	00131148	**246030302**
K-Xct I Abs	300	2014	2014	00131148	**246030302**
People Gti	300	2010	2011	00177005	**246030142**
People Gti	300	2014	2014	00177005	**246030142**
People Gti Abs	300	2012	2012	00177005	**246030142**
People Gti Abs	300	2014	2014	00177005	**246030142**
People Gti Abs E4	300	2016	2016	00177005	**246030142**
People S 300I	300	2008	2008	00177005	**246030142**
X Citing 300I	300	2008	2008	00177005	**246030142**
X Citing 300I R	300	2008	2009	00177005	**246030142**
X Citing I	400	2013	2015	00131148	**246030302**
X Citing I Abs	400	2014	2015	00131148	**246030302**
X Citing I Abs E4	400	2016	2016	00131148	**246030302**
X Citing	500	2005	2005	00177005	**246030142**
MALAGUTI					
Centro Base	50	1993	1994	02601100	**246030050**
Centro Base	50	1993	1994	02601100	**246030051**
Centro Sl	50	1994	1998	02601100	**246030050**
Centro Sl	50	1994	1998	02601100	**246030051**
Centro Sl Kat	50	1999	2000	02601100	**246030050**
Centro Sl Kat	50	1999	2000	02601100	**246030051**
Ciak	50	1999	2000	02601100	**246030050**
Ciak	50	1999	2000	02601100	**246030051**
Ciak Mono Euro 2	50	2003	2003	02601100	**246030050**
Ciak Mono Euro 2	50	2003	2003	02601100	**246030051**
Ciak Td	50	2000	2001	02601100	**246030050**
Ciak Td	50	2000	2001	02601100	**246030051**
Crosser Cr1	50	1995	1998	02601100	**246030050**
Crosser Cr1	50	1995	1998	02601100	**246030051**
F10 Ac	50	2008	2008	02601100	**246030050**
F10 Ac	50	2008	2008	02601100	**246030051**
F10 Ac Eco	50	2009	2010	02601100	**246030050**
F10 Ac Eco	50	2009	2010	02601100	**246030051**
F10 Jet Line	50	1992	1998	02601100	**246030050**
F10 Jet Line	50	1992	1998	02601100	**246030051**
F10 Kat	50	1999	2000	02601100	**246030050**
F10 Kat	50	1999	2000	02601100	**246030051**
F10 Restyling Eu1	50	2001	2002	02601100	**246030050**
F10 Restyling Eu1	50	2001	2002	02601100	**246030051**
F10 Restyling Euro2	50	2002	2003	02601100	**246030050**
F10 Restyling Euro2	50	2002	2003	02601100	**246030051**
F12 Phantom	50	1994	1998	02601100	**246030050**
F12 Phantom	50	1994	1998	02601100	**246030051**
F12 Phantom Euro1	50	1999	2000	02601100	**246030050**
F12 Phantom Euro1	50	1999	2000	02601100	**246030051**
F12 Phantom Lc	50	1994	1998	02601100	**246030050**
F12 Phantom Lc	50	1994	1998	02601100	**246030051**
F12 Phantom Lc Euro1	50	1999	2000	02601100	**246030050**
F12 Phantom Lc Euro1	50	1999	2000	02601100	**246030051**
F12 Phantom Lc Restyling Eu1	50	2001	2002	02601100	**246030050**
F12 Phantom Lc Restyling Eu1	50	2001	2002	02601100	**246030051**
F12 Phantom Lc Twin Disks	50	1998	1998	02601100	**246030050**
F12 Phantom Lc Twin Disks	50	1998	1998	02601100	**246030051**
F12 Phantom Restyling Eu1	50	2001	2002	02601100	**246030050**
F12 Phantom Restyling Eu1	50	2001	2002	02601100	**246030051**
F12 Phantom Restyling Eu2	50	2002	2002	02601100	**246030050**
F12 Phantom Restyling Eu2	50	2002	2002	02601100	**246030051**
F12R Phantom Ac	50	2007	2010	02601100	**246030050**
F12R Phantom Ac	50	2007	2010	02601100	**246030051**
F15 Fire Fox	50	1996	1998	02601100	**246030050**
F15 Fire Fox	50	1996	1998	02601100	**246030051**
F15 Fire Fox Twin Disks & Special	50	1998	1999	02601100	**246030050**
F15 Fire Fox Twin Disks & Special	50	1998	1999	02601100	**246030051**
F15 Fire Fox Twin Disks Digit Kat	50	1998	2000	02601100	**246030050**
F15 Fire Fox Twin Disks Digit Kat	50	1998	2000	02601100	**246030051**
F15 Lc-Tds Restyling Euro 1	50	2001	2001	02601100	**246030050**
F15 Lc-Tds Restyling Euro 1	50	2001	2001	02601100	**246030051**
Yesterday - Yesterday Euro	50	1997	2000	02601100	**246030050**
Yesterday - Yesterday Euro	50	1997	2000	02601100	**246030051**
Ciak	100	1999	2000	02601100	**246030050**
Ciak	100	1999	2000	02601100	**246030051**
F12 Phantom	100	1999	2000	02601100	**246030050**
F12 Phantom	100	1999	2000	02601100	**246030051**
Ciak	125	2000	2001	02601500	**246030070**
Ciak	125	2000	2001	02601500	**246030072**
Ciak Master	125	2004	2004	02601500	**246030070**
Ciak Master	125	2004	2004	02601500	**246030072**
Ciak Master Euro 3	125	2006	2006	02603000	**246030122**
Ciak Restyling Euro2	125	2003	2003	02601500	**246030070**
Ciak Restyling Euro2	125	2003	2003	02601500	**246030072**
F18 Warrior	125	2000	2002	02601800	**246030081**
F18 Warrior	125	2000	2002	02601800	**246030082**
Madison	125	1999	2001	02601400	**246030011**
Madison	125	1999	2001	02601400	**246030012**
Madison 3	125	2006	2009	02602900	**246030162**
Madison R Restyling	125	2002	2002	02601400	**246030011**
Madison R Restyling	125	2002	2002	02601400	**246030012**
Madison R Restyling Euro2	125	2003	2004	02601400	**246030011**
Madison R Restyling Euro2	125	2003	2004	02601400	**246030012**
Phantom Max	125	2003	2003	02601400	**246030011**
Phantom Max	125	2003	2003	02601400	**246030012**
Ciak	150	2000	2002	02601500	**246030070**
Ciak	150	2000	2002	02601500	**246030072**
Ciak Master	150	2004	2004	02601500	**246030070**
Ciak Master	150	2004	2004	02601500	**246030072**
Ciak Restyling Euro2	150	2003	2003	02601500	**246030070**
Ciak Restyling Euro2	150	2003	2003	02601500	**246030072**
F18 Warrior	150	2000	2002	02601800	**246030081**
F18 Warrior	150	2000	2002	02601800	**246030082**
Madison T	150	1999	2001	02601400	**246030011**
Madison T	150	1999	2001	02601400	**246030012**
Ciak Master Euro 2	200	2006	2006	02603000	**246030122**
Oregon	250	2006	2010	58090R	**246030162**
Madison K	400	2002	2002	02601900	**246030100**
Madison K	400	2002	2002	02601900	**246030102**
Madison K Restyling	400	2002	2004	02601900	**246030100**
Madison K Restyling	400	2002	2004	02601900	**246030102**
MBK					
Cs Mach G Euro1	50	2002	2003	5RNH19600000	**246030070**
Cs Mach G Euro1	50	2002	2003	5RNH19600000	**246030072**
Cs Mach G Euro2	50	2002	2004	5RNH19600000	**246030070**
Cs Mach G Euro2	50	2002	2004	5RNH19600000	**246030072**
Cw Booster	50	1990	1991	4VVH19600100	**246030050**
Cw Booster	50	1990	1991	4VVH19600100	**246030051**



Modello *Model*	CC	Da *From*	A *To*	OEM	Codice RMS *RMS Code*
Cw Booster	50	2001	2002	4VVH19600100	**246030050**
Cw Booster	50	2001	2002	4VVH19600100	**246030051**
Cw Booster	50	2004	2004	5RNH19600000	**246030070**
Cw Booster	50	2004	2004	5RNH19600000	**246030072**
Cw Booster (Ita)	50	1992	1994	4VVH19600100	**246030050**
Cw Booster (Ita)	50	1992	1994	4VVH19600100	**246030051**
Cw Booster Naked	50	2003	2003	5RNH19600000	**246030070**
Cw Booster Naked	50	2003	2003	5RNH19600000	**246030072**
Cw Booster Spirit	50	1996	1998	4VVH19600100	**246030050**
Cw Booster Spirit	50	1996	1998	4VVH19600100	**246030051**
Cw Booster Spirit (Ita)	50	1999	2000	4VVH19600100	**246030050**
Cw Booster Spirit (Ita)	50	1999	2000	4VVH19600100	**246030051**
Cw Booster Spirit Euro2	50	2002	2002	4VVH19600100	**246030050**
Cw Booster Spirit Euro2	50	2002	2002	4VVH19600100	**246030051**
Cw Booster Spirit Euro2	50	2003	2003	5RNH19600000	**246030070**
Cw Booster Spirit Euro2	50	2003	2003	5RNH19600000	**246030072**
Cw L Booster	50	2001	2003	4VVH19600100	**246030050**
Cw L Booster	50	2001	2003	4VVH19600100	**246030051**
Cw L Booster Spirit	50	2003	2003	5RNH19600000	**246030070**
Cw L Booster Spirit	50	2003	2003	5RNH19600000	**246030072**
Cw R Booster Road (Ita)	50	1994	1995	4VVH19600100	**246030050**
Cw R Booster Road (Ita)	50	1994	1995	4VVH19600100	**246030051**
Cw Rs Booster Ng	50	2001	2002	4VVH19600100	**246030050**
Cw Rs Booster Ng	50	2001	2002	4VVH19600100	**246030051**
Cw Rs Booster Ng	50	2003	2003	5RNH19600000	**246030070**
Cw Rs Booster Ng	50	2003	2003	5RNH19600000	**246030072**
Cw Rs Booster Ng (Ita)	50	1995	1999	4VVH19600100	**246030050**
Cw Rs Booster Ng (Ita)	50	1995	1999	4VVH19600100	**246030051**
Cw Rs Booster Ng Euro1	50	1999	2000	4VVH19600100	**246030050**
Cw Rs Booster Ng Euro1	50	1999	2000	4VVH19600100	**246030051**
Cw Rsp Booster Rocket (Ita)	50	1997	1998	4VVH19600100	**246030050**
Cw Rsp Booster Rocket (Ita)	50	1997	1998	4VVH19600100	**246030051**
Cw Rsx Booster Track (Ita)	50	1996	1998	4VVH19600100	**246030050**
Cw Rsx Booster Track (Ita)	50	1996	1998	4VVH19600100	**246030051**
Cw Sp Booster Spirit Euro2	50	2002	2002	4VVH19600100	**246030050**
Cw Sp Booster Spirit Euro2	50	2002	2002	4VVH19600100	**246030051**
Ew Stunt	50	2000	2002	4VVH19600100	**246030050**
Ew Stunt	50	2000	2002	4VVH19600100	**246030051**
Ya R Forte (Che-Ita)	50	1994	1996	4VVH19600100	**246030050**
Ya R Forte (Che-Ita)	50	1994	1996	4VVH19600100	**246030051**
Ye Evolis (Ita)	50	1992	1995	4VVH19600100	**246030050**
Ye Evolis (Ita)	50	1992	1995	4VVH19600100	**246030051**
Yh Flipper	50	1998	1998	4VVH19600100	**246030050**
Yh Flipper	50	1998	1998	4VVH19600100	**246030051**
Yh Flipper	50	2001	2002	4VVH19600100	**246030050**
Yh Flipper	50	2001	2002	4VVH19600100	**246030051**
Yh Flipper Catalitico	50	1999	2000	4VVH19600100	**246030050**
Yh Flipper Catalitico	50	1999	2000	4VVH19600100	**246030051**
Yh Flipper Euro2	50	2003	2004	5RNH19600000	**246030070**
Yh Flipper Euro2	50	2003	2004	5RNH19600000	**246030072**
Ym Fizz (Ita)	50	1994	1995	4VVH19600100	**246030050**
Ym Fizz (Ita)	50	1994	1995	4VVH19600100	**246030051**
Yn R Ovetto (Che-Ita)	50	1997	2001	4VVH19600100	**246030050**
Yn R Ovetto (Che-Ita)	50	1997	2001	4VVH19600100	**246030051**
Yn R Ovetto Euro1	50	2002	2004	5RNH19600000	**246030070**
Yn R Ovetto Euro1	50	2002	2004	5RNH19600000	**246030072**
Yn R Ovetto Euro2	50	2002	2003	5RNH19600000	**246030070**
Yn R Ovetto Euro2	50	2002	2003	5RNH19600000	**246030072**

Modello *Model*	CC	Da *From*	A *To*	OEM	Codice RMS *RMS Code*
Yq L Nitro Jaguar	50	2004	2004	5RNH19600000	**246030070**
Yq L Nitro Jaguar	50	2004	2004	5RNH19600000	**246030072**
Yq Nitro	50	2001	2002	4VVH19600100	**246030050**
Yq Nitro	50	2001	2002	4VVH19600100	**246030051**
Yq Nitro	50	2004	2004	5RNH19600000	**246030070**
Yq Nitro	50	2004	2004	5RNH19600000	**246030072**
Yq Nitro (Ita)	50	1997	2000	4VVH19600100	**246030050**
Yq Nitro (Ita)	50	1997	2000	4VVH19600100	**246030051**
Yq Nitro Euro2	50	2003	2003	5RNH19600000	**246030070**
Yq Nitro Euro2	50	2003	2003	5RNH19600000	**246030072**
Yn Ovetto	100	2000	2002	5RNH19600000	**246030070**
Yn Ovetto	100	2000	2002	5RNH19600000	**246030072**
Yq Nitro	100	2000	2002	4VVH19600100	**246030050**
Yq Nitro	100	2000	2002	4VVH19600100	**246030051**
Xn Doodo	125	2000	2001	5MFW19600000	**246030011**
Xn Doodo	125	2000	2001	5MFW19600000	**246030012**
Yp E Skyliner	125	2003	2003	4HMH19600000	**246030090**
Yp E Skyliner	125	2003	2003	4HMH19600000	**246030092**
Yp Skyliner	125	2001	2002	4HMH19600000	**246030090**
Yp Skyliner	125	2001	2002	4HMH19600000	**246030092**
Yp Skyliner	150	2001	2002	4HMH19600000	**246030090**
Yp Skyliner	150	2001	2002	4HMH19600000	**246030092**
Yp E Skyliner	180	2003	2003	4HMH19600000	**246030090**
Yp E Skyliner	180	2003	2003	4HMH19600000	**246030092**
MOTO GUZZI					
Ntx	350	1986	1990	GU29703800	**246030330**
V35 Carabinieri-Pa Pd30077>	350	1992	2001	GU29703800	**246030330**
V35 Florida	350	1986	1990	GU29703800	**246030330**
V35 II	350	1980	1985	GU29703800	**246030330**
V35 III	350	1985	1987	GU29703800	**246030330**
V35C-V50C	350	1982	1986	GU29703800	**246030330**
V35-V50 Accensione Elettronica	350	1977	1979	GU29703800	**246030330**
V50 III	500	1980	1984	GU29703800	**246030330**
V50 III Polizia-Pa Vecchio Tipo	500	1982	1990	GU29703800	**246030330**
V50 Pa	500	1992	2001	GU29703800	**246030330**
Ntx	650	1986	1990	GU29703800	**246030330**
V65 Custom	650	1983	1986	GU29703800	**246030330**
V65 Florida	650	1985	1992	GU29703800	**246030330**
V65 Polizia-Pa Nuovo Tipo	650	1988	1995	GU29703800	**246030330**
750 X Polizia-Pa 1A Serie <Lx15449	750	1992	1994	GU29703800	**246030330**
750 X Polizia-Pa 2A Serie Lx15450>	750	1995	2002	GU29703800	**246030330**
V75 Pa Vecchio Tipo	750	1992	1996	GU29703800	**246030330**
850 Le Mans III	850	1981	1984	GU29703800	**246030330**
850 T3 E Derivati	850	1979	1985	GU29703800	**246030330**
850 T5 Civile III Serie	850	1984	1987	GU29703800	**246030330**
850 T5 Polizia-Cc-Pa (Nc) <Vr36415	850	1988	1993	GU29703800	**246030330**
850 T5 Polizia-Cc-Pa Vecchio Tipo	850	1985	1989	GU29703800	**246030330**
1000 Gt	1000	1987	1991	GU29703800	**246030330**
1000 Sp	1000	1979	1983	GU29703800	**246030330**
1000 Sp II	1000	1984	1987	GU29703800	**246030330**
California II	1000	1981	1987	GU29703800	**246030330**
Le Mans	1000	1984	1993	GU29703800	**246030330**
PIAGGIO					
Ape	50	2009	2011	58096R	**246030152**
Ape	50	2011	2017	58090R	**246030162**



REGOLATORI DI TENSIONE

REGULATORS

Modello *Model*	CC	Da *From*	A *To*	OEM	Codice RMS *RMS Code*
Ape (Modello Cross - *Cross model)*	50	2009	2017	2180605	**246030321**
Ape 2T Euro4	50	2018	2019	58090R5	**246030162**
Ape FI - FI2	50	1989	1995	2940165	**246030040**
Ape FI - FI2	50	1989	1995	2940165	**246030042**
Ape FI3 Europa	50	1996	1999	2940165	**246030040**
Ape FI3 Europa	50	1996	1999	2940165	**246030042**
Ape FI3 Europa (Modello Cross - *Cross model)*	50	1996	1999	2180605	**246030321**
Ape Mix 2T	50	1998	2008	58096R	**246030152**
Ape Mix 2T (Modello Cross - *Cross model)*	50	1998	2008	2180605	**246030321**
Ape Rst Mix	50	1999	2003	82587R	**246030152**
Ape Rst Mix (Modello Cross - *Cross model)*	50	1999	2003	2180605	**246030321**
Ape Tm P	50	1985	1989	2308245	**246030020**
Diesis	50	2001	2001	82587R	**246030152**
Fly 2T	50	2005	2007	58096R	**246030152**
Fly 2T	50	2010	2011	58096R	**246030152**
Fly 4T & 25-30 Km/H	50	2008	2011	639751	**246030182**
Fly 4T 2V	50	2013	2015	641788	**246030182**
Fly 4T 2V 25-30Km-H	50	2012	2014	641788	**246030182**
Fly 4T 4V	50	2012	2013	641788	**246030182**
Fly 4T Motore Chn	50	2006	2007	639751	**246030182**
Free	50	1992	1994	2940165	**246030040**
Free	50	1992	1994	2940165	**246030042**
Free Delivery	50	2000	2001	82587R	**246030152**
Free FI	50	1995	2002	2940165	**246030040**
Free FI	50	1995	2002	2940165	**246030042**
Free FI	50	1995	2002	82587R	**246030152**
Liberty	50	1997	2005	82587R	**246030152**
Liberty 2T	50	2006	2008	58096R	**246030152**
Liberty 2T Rst	50	2004	2004	82587R	**246030152**
Liberty 2T Sport	50	2006	2008	82587R	**246030152**
Liberty Iget 4T 3V 25Km/H	50	2016	2016	58090R5	**246030162**
Liberty Iget 4T 3V Ie	50	2015	2017	58090R	**246030162**
Liberty Moc 2T & Elle	50	2009	2013	58096R	**246030152**
Liberty Ptt Eu2	50	2004	2005	82587R	**246030152**
Nrg	50	1994	1996	2940165	**246030040**
Nrg	50	1994	1996	2940165	**246030042**
Nrg Extreme	50	1999	2000	82587R	**246030152**
Nrg Mc3	50	2001	2004	82587R	**246030152**
Nrg Power Dd	50	2005	2006	58096R	**246030152**
Nrg Power Dd	50	2007	2015	58096R	**246030152**
Nrg Power Dd Serie Speciale	50	2007	2012	58096R	**246030152**
Nrg Power Dt	50	2006	2015	58096R	**246030152**
Nrg Power Dt Serie Speciale	50	2007	2008	58096R	**246030152**
Nrg Power Purejet	50	2004	2011	58090R	**246030162**
Nrg Purejet	50	2002	2004	82501R	**246030162**
Nrg Purejet	50	2010	2010	58090R	**246030162**
Nrg Rst Mc2	50	1996	1997	2940165	**246030040**
Nrg Rst Mc2	50	1996	1997	2940165	**246030042**
Nrg Rst Mc2	50	1998	1998	82587R	**246030152**
Ntt	50	1995	1996	2940165	**246030040**
Ntt	50	1995	1996	2940165	**246030042**
Quartz	50	1992	1996	2940165	**246030040**
Quartz	50	1992	1996	2940165	**246030042**
Sfera	50	1991	1993	2940165	**246030040**
Sfera	50	1991	1993	2940165	**246030042**
Sfera Maquillage 2	50	1994	1994	2940165	**246030040**
Sfera Maquillage 2	50	1994	1994	2940165	**246030042**
Sfera Rst	50	1995	1997	2940165	**246030040**
Sfera Rst	50	1995	1997	2940165	**246030042**
Typhoon	50	2001	2004	82587R	**246030152**
Typhoon	50	2005	2011	58096R	**246030152**
Typhoon 2T Euro2	50	2010	2016	58096R	**246030152**
Typhoon 2T Euro3 Ch	50	2011	2011	58096R	**246030152**
Velofax	50	1996	1999	2940165	**246030040**
Velofax	50	1996	1999	2940165	**246030042**
Vespa Et2	50	1997	1998	2940165	**246030040**
Vespa Et2	50	1997	1998	2940165	**246030042**
Vespa Et2	50	1998	2005	58096R	**246030152**
Vespa FI	50	1990	1990	2308245	**246030020**
Vespa FI2 Automatica	50	1990	1991	2940165	**246030040**
Vespa FI2 Automatica	50	1990	1991	2940165	**246030042**
Vespa FI2 Hp	50	1991	1997	2940165	**246030040**
Vespa FI2 Hp	50	1991	1997	2940165	**246030042**
Vespa Lx 2T	50	2005	2013	58096R	**246030152**
Vespa Lx 2T Touring & 30Km	50	2010	2013	58096R	**246030152**
Vespa Lx 4T-4V	50	2009	2013	641788	**246030182**
Vespa Lx 4T-4V Touring	50	2010	2013	641788	**246030182**
Vespa Lxv 2T	50	2006	2009	58096R	**246030152**
Vespa Lxv 2T Navy	50	2008	2008	58096R	**246030152**
Vespa N	50	1989	1990	2308245	**246030020**
Vespa Pk Xl	50	1985	1988	2308245	**246030020**
Vespa Pk Xl Plurimatic	50	1985	1990	1616395	**246030030**
Vespa Pk Xl Plurimatic	50	1985	1990	1616395	**246030031**
Vespa Pk Xl Rush	50	1988	1989	2308245	**246030020**
Vespa Primavera 2T	50	2013	2017	58096R	**246030152**
Vespa Primavera 4T-4V	50	2013	2017	641788	**246030182**
Vespa S 2T & College	50	2007	2012	58096R	**246030152**
Vespa S 4T-4V & College	50	2008	2012	641788	**246030182**
Vespa Sprint 2T 2V	50	2014	2016	58096R	**246030152**
Vespa Sprint 4T 4V	50	2014	2017	641788	**246030182**
Zip	50	1992	1996	2940165	**246030040**
Zip	50	1992	1996	2940165	**246030042**
Zip	50	2000	2004	82587R	**246030152**
Zip 2T	50	2008	2013	58096R	**246030152**
Zip 4T	50	2006	2013	641788	**246030182**
Zip 4T 25Km-H	50	2006	2016	641788	**246030182**
Zip Fast Raider	50	1993	1994	2940165	**246030040**
Zip Fast Raider	50	1993	1994	2940165	**246030042**
Zip Fast Raider Rst	50	1996	1997	2940165	**246030040**
Zip Fast Raider Rst	50	1996	1997	2940165	**246030042**
Zip Rst	50	1996	1998	291931	**246030040**
Zip Rst	50	1996	1998	291931	**246030042**
Zip Rst	50	1999	1999	82587R	**246030152**
Zip Sp	50	1996	2000	2940165	**246030040**
Zip Sp	50	1996	2000	2940165	**246030042**
Zip Sp	50	2001	2004	82587R	**246030152**
Zip Sp Euro2	50	2006	2013	58096R	**246030152**
Skr City	80	1999	1999	291931	**246030040**
Skr City	80	1999	1999	291931	**246030042**
Fly 4T	100	2006	2014	639751	**246030182**
Zip 4T	100	2006	2010	641788	**246030182**
Beverly	125	2001	2003	486062	**246030162**
Beverly Euro 3	125	2007	2008	58090R	**246030162**
Beverly Euro 3 Mic	125	2007	2007	58090R	**246030162**



Modello *Model*	CC	Da *From*	A *To*	OEM	Codice RMS *RMS Code*
Beverly Euro 3 Sport	125	2007	2008	58090R	**246030162**
Beverly Rst	125	2004	2007	486062	**246030162**
Beverly Rst 4T 4V Ie Euro3	125	2010	2015	641709	**246030281**
Cosa 2	125	1991	1997	2308245	**246030020**
Cosa Cl-Clx	125	1988	1991	2308245	**246030020**
Fly	125	2005	2007	58090R	**246030162**
Fly 4T 3V Ie E3 Dt	125	2013	2015	58204R	**246030292**
Fly 4T 3V Ie Euro3 Lem	125	2012	2013	58204R	**246030292**
Fly Euro3	125	2007	2011	58090R	**246030162**
Hexagon Gtx	125	2000	2000	58090R	**246030162**
Hexagon Lx4	125	1998	1999	82587R	**246030152**
Liberty	125	1998	2000	82587R	**246030152**
Liberty	125	2001	2002	58090R	**246030162**
Liberty 4T	125	2006	2007	58090R	**246030162**
Liberty 4T 2V Euro3	125	2009	2012	58090R	**246030162**
Liberty 4T 2V Ie Ptt - Ita	125	2012	2013	58204R	**246030292**
Liberty 4T 3V Ie	125	2015	2015	486062	**246030162**
Liberty 4T 3V Ie E3	125	2013	2014	486062	**246030162**
Liberty 4T 3V Ie E3	125	2014	2014	58204R	**246030292**
Liberty 4T Euro3	125	2006	2008	58090R	**246030162**
Liberty 4T Euro3 Delivery - Single	125	2007	2015	58090R	**246030162**
Liberty 4T Euro3 Delivery - Tnt - Nexive	125	2008	2015	58090R	**246030162**
Liberty 4T Iget Corporate E4	125	2017	2019	58090R5	**246030162**
Liberty 4T Sport Euro3	125	2006	2008	58090R	**246030162**
Liberty Iget 4T 3V Ie	125	2015	2019	58090R5	**246030162**
Liberty Rst	125	2004	2005	486062	**246030162**
Liberty Rst Ptt	125	2005	2011	58090R	**246030162**
Liberty Sport	125	2006	2006	58090R	**246030162**
Mp3	125	2006	2008	58090R	**246030162**
Mp3 Ibrido	125	2009	2010	639110	**246030192**
Mp3 Ie	125	2008	2009	641709	**246030281**
Mp3 Ie Touring	125	2011	2012	641709	**246030281**
Mp3 Yourban Erl	125	2011	2013	641533	**246030281**
Sfera	125	1995	1997	2940165	**246030040**
Sfera	125	1995	1997	2940165	**246030042**
Skipper 4T	125	2000	2002	58090R	**246030162**
Super Hexagon Gtx 12	125	2001	2002	58090R	**246030162**
Typhoon 4T 2V Euro3	125	2010	2011	58090R	**246030162**
Vespa 946 4T 3V Abs - 946 Red Emea, Apac	125	2013	2017	58204R	**246030292**
Vespa 946 4T 3V Abs Armani	125	2015	2015	58204R	**246030292**
Vespa Et4	125	1996	1998	2940165	**246030040**
Vespa Et4	125	1996	1998	2940165	**246030042**
Vespa Et4	125	1996	1998	58096R	**246030152**
Vespa Et4	125	1999	2002	58090R	**246030162**
Vespa Fl	125	1989	1990	2308245	**246030020**
Vespa Granturismo	125	2003	2007	58090R	**246030162**
Vespa Granturismo Euro 3	125	2006	2007	58090R	**246030162**
Vespa Gts 4T Ie Super	125	2009	2016	584533	**246030192**
Vespa Gts 4T Ie Super	125	2009	2016	641709	**246030281**
Vespa Gts Euro3	125	2007	2012	58090R	**246030162**
Vespa Gtv	125	2006	2008	58090R	**246030162**
Vespa Gtv 4T Navy Euro3	125	2008	2008	58090R	**246030162**
Vespa Lx	125	2005	2006	58090R	**246030162**
Vespa Lx 4T 3V Ie - Touring	125	2012	2013	58204R	**246030292**
Vespa Lx 4T Euro3 Touring	125	2010	2011	58204R	**246030292**
Vespa Lx 4T Fl	125	2009	2009	58090R	**246030162**

Modello *Model*	CC	Da *From*	A *To*	OEM	Codice RMS *RMS Code*
Vespa Lx Euro 3	125	2006	2008	58090R	**246030162**
Vespa Lx Euro 3 Ie	125	2009	2011	58204R	**246030292**
Vespa Lx Primavera 4T 3V Ie	125	2013	2017	58090R5	**246030162**
Vespa Lxv 4T Euro3	125	2006	2009	58090R	**246030162**
Vespa Lxv 4T Navy Euro3	125	2007	2008	58090R	**246030162**
Vespa Lxv Ie 4T	125	2010	2013	58204R	**246030292**
Vespa Pk	125	1982	1984	1616395	**246030030**
Vespa Pk	125	1982	1984	1616395	**246030031**
Vespa Pk (Avviamento elettrico - *Eletric start)*	125	1982	1985	2940165	**246030040**
Vespa Pk (Avviamento elettrico - *Eletric start)*	125	1982	1985	2940165	**246030042**
Vespa Pk Automatica	125	1984	1989	1616395	**246030030**
Vespa Pk Automatica	125	1984	1989	1616395	**246030031**
Vespa Pk Automatica (Avviamento elettrico - *Eletric start)*	125	1984	1989	2940165	**246030040**
Vespa Pk Automatica (Avviamento elettrico - *Eletric start)*	125	1984	1989	2940165	**246030042**
Vespa Pk Xl	125	1986	1989	1616395	**246030030**
Vespa Pk Xl	125	1986	1989	1616395	**246030031**
Vespa Pk Xl (Avviamento elettrico - *Eletric start)*	125	1986	1989	2308245	**246030020**
Vespa Primavera 4T 3V E4 Iget Abs	125	2016	2019	58090R5	**246030162**
Vespa Px	125	1998	2001	2308245	**246030020**
Vespa Px	125	2011	2016	58074R	**246030020**
Vespa Px 30 Anni	125	2007	2008	2308245	**246030020**
Vespa Px Euro 2	125	2001	2007	2308245	**246030020**
Vespa Px T5	125	1985	1989	2308245	**246030020**
Vespa Pxe Arcobaleno	125	1981	1997	1616395	**246030030**
Vespa Pxe Arcobaleno	125	1981	1997	1616395	**246030031**
Vespa Pxe Arcobaleno (Avviamento elettrico - *Eletric start)*	125	1981	1997	2940165	**246030040**
Vespa Pxe Arcobaleno (Avviamento elettrico - *Eletric start)*	125	1981	1997	2940165	**246030042**
Vespa S 4T 3V Ie	125	2012	2012	58204R	**246030292**
Vespa S 4T Euro 3	125	2007	2008	58090R	**246030162**
Vespa S 4T Ie & College	125	2009	2011	58204R	**246030292**
Vespa Sprint 4T 3V Ie	125	2014	2015	58090R	**246030162**
Vespa Sprint Iget 4T 3V Abs	125	2016	2019	58090R5	**246030162**
X Evo	125	2007	2016	58090R	**246030162**
X7 Euro 3	125	2008	2008	58090R	**246030162**
X8	125	2004	2004	82501R	**246030162**
X8	125	2005	2006	58090R	**246030162**
X8 Premium Euro 2	125	2006	2006	58090R	**246030162**
X8 Premium Euro 3	125	2006	2007	58090R	**246030162**
X8 Street Euro 2	125	2006	2007	58090R	**246030162**
X9 Evolution	125	2001	2003	486062	**246030162**
X9 Evolution	125	2005	2006	58090R	**246030162**
X9 Evolution Euro3	125	2007	2007	58090R	**246030162**
Zip	125	2000	2002	58090R	**246030162**
Fly	150	2005	2007	58090R	**246030162**
Fly Euro3	150	2008	2011	58090R	**246030162**
Liberty 4T 3V Lem	150	2013	2014	58204R	**246030292**
Liberty 4T 3V Lem	150	2014	2014	486062	**246030162**
Liberty 4T Euro3	150	2008	2008	58090R	**246030162**
Liberty 4T Sport Euro3	150	2008	2008	58090R	**246030162**
Liberty Iget 4T 3V Ie	150	2015	2019	58090R5	**246030162**



REGOLATORI DI TENSIONE

REGULATORS

Modello *Model*	CC	Da *From*	A *To*	OEM	Codice RMS *RMS Code*
Liberty Moc 4T Euro3	150	2009	2013	58090R	**246030162**
Vespa Gts Super Ie 4T 3V Au,Ex,Jp,Ri,T,V	150	2014	2015	58204R	**246030292**
Vespa Lt 4T 3V Ie	150	2014	2014	58204R	**246030292**
Vespa Lx	150	2005	2006	58090R	**246030162**
Vespa Lx 4T 3V Ie - Touring	150	2012	2013	58090R	**246030162**
Vespa Lx 4T 3V Ie - Touring	150	2012	2013	58204R	**246030292**
Vespa Lx 4T Fl	150	2009	2009	58090R	**246030162**
Vespa Lx Euro 3	150	2006	2008	58090R	**246030162**
Vespa Lx Euro 3 Ie	150	2009	2011	58204R	**246030292**
Vespa Lx Touring	150	2010	2012	58204R	**246030292**
Vespa Primavera 4T 3V Iget Abs	150	2016	2019	58090R5	**246030162**
Vespa Primavera 4T-3V	150	2013	2016	58090R	**246030162**
Vespa Px	150	2011	2017	2308245	**246030020**
Vespa S 4T	150	2008	2009	58090R	**246030162**
Vespa S 4T Ie & College	150	2009	2012	58204R	**246030292**
Vespa Sprint 4T 3V Ie	150	2015	2015	58090R	**246030162**
Vespa Sprint Sport 4T 3V Iget Abs	150	2016	2019	58090R5	**246030162**
X8 Street Euro 2	150	2006	2008	58090R	**246030162**
X9 Amalfi	180	2000	2003	486062	**246030162**
Carnaby	200	2007	2010	58090R	**246030162**
Liberty	200	2006	2006	58090R	**246030162**
Liberty 4T Euro3	200	2006	2008	58090R	**246030162**
Liberty 4T Sport Euro3	200	2006	2007	58090R	**246030162**
Liberty Rst	200	2004	2004	486062	**246030162**
Liberty Sport	200	2006	2006	58090R	**246030162**
Vespa Granturismo	200	2006	2007	58090R	**246030162**
X8	200	2005	2007	58090R	**246030162**
X9	200	2002	2003	486062	**246030162**
X9 Evolution	200	2003	2003	486062	**246030162**
Ape Car P2-P3	220	1978	1985	157714	**246030270**
Ape Mp P501-P601	220	1978	1996	157714	**246030270**
Ape Tm	220	2009	2016	157714	**246030270**
Ape Tm P602	220	1982	1983	157714	**246030270**
Ape Tm P703 Fl2	220	1999	2007	256023	**246030270**
Ape Tm P703-P703V	220	1984	2005	256023	**246030270**
Beverly	250	2006	2007	58090R	**246030162**
Beverly Cruiser	250	2007	2009	58086R	**246030192**
Beverly Euro 3 Mic	250	2007	2007	58086R	**246030192**
Beverly Ie Euro 3	250	2006	2008	58086R	**246030192**
Beverly Rst	250	2004	2005	486062	**246030162**
Beverly Sport	250	2006	2008	58086R	**246030192**
Beverly Tourer Euro3	250	2007	2009	58086R	**246030192**
Carnaby	250	2008	2008	639110	**246030192**
Mp3	250	2006	2008	639110	**246030192**
Mp3 Lt	250	2008	2009	639110	**246030192**
Mp3 Mic	250	2008	2009	58086R	**246030192**
Mp3 Mic	250	2008	2009	639110	**246030192**
Vespa Gt 60 Euro 3	250	2006	2007	639110	**246030192**
Vespa Gts	250	2005	2016	639110	**246030192**
Vespa Gts	250	2005	2016	641709	**246030281**
Vespa Gts Abs	250	2005	2012	58086R	**246030192**
Vespa Gtv	250	2006	2009	639110	**246030192**
Vespa Gtv 4T Navy Euro3	250	2007	2007	639110	**246030192**
X Evo	250	2007	2016	639110	**246030192**
X7 Euro 3	250	2008	2008	639110	**246030192**
X8 Euro3	250	2005	2008	58086R	**246030192**

Modello *Model*	CC	Da *From*	A *To*	OEM	Codice RMS *RMS Code*
X9	250	2000	2001	496454	**246030102**
X9 Evolution	250	2004	2004	486062	**246030162**
X9 Evolution	250	2006	2006	58090R	**246030162**
Beverly Rst 4T 4V Ie Euro3	300	2010	2015	641709	**246030281**
Beverly Tourer Euro3	300	2009	2010	58086R	**246030192**
Carnaby Cruiser	300	2009	2012	58086R	**246030192**
Mp3 300 Ie Lt	300	2010	2011	58208R	**246030281**
Mp3 300 Ie Mic	300	2010	2011	58086R	**246030192**
Mp3 300 Ie Mic	300	2010	2011	58208R	**246030281**
Mp3 4T 4V Ie Lt Ibrido	300	2010	2011	639110	**246030192**
Mp3 Ie E4 Lt Business - Sport Abs	300	2016	2017	641709	**246030281**
Mp3 Ie Lt- Ie Lt Sport	300	2011	2014	641709	**246030281**
Mp3 Ie Lt Touring	300	2011	2013	641709	**246030281**
Mp3 Ie Touring	300	2011	2012	641709	**246030281**
Mp3 Yourban Erl	300	2011	2015	641709	**246030281**
Mp3 Yourban Lt Erl	300	2011	2012	641709	**246030281**
Vespa Gts Ie & Touring	300	2012	2016	641709	**246030281**
Vespa Gts Ie Abs E4	300	2016	2017	641709	**246030281**
Vespa Gts Ie Touring	300	2011	2012	641709	**246030281**
Vespa Gts Super	300	2008	2016	58086R	**246030192**
Vespa Gts Super	300	2008	2016	641709	**246030281**
Vespa Gts Super Sport	300	2010	2013	58208R	**246030281**
Vespa Gtv 4T 4V Ie	300	2010	2013	641709	**246030281**
Vespa Gtv Via Montenapoleone	300	2010	2010	58208R	**246030281**
Beverly Euro 3	400	2006	2007	58086R	**246030192**
Beverly Tourer Euro3	400	2008	2010	639110	**246030192**
Mp3	400	2007	2008	639110	**246030192**
Mp3 Ie Lt - Mp3 Ie Lt Sport	400	2008	2010	639110	**246030192**
Mp3 Ie Lt Touring	400	2011	2011	639110	**246030192**
Mp3 Mic	400	2008	2010	639110	**246030192**
Mp3 Rl Touring	400	2011	2011	639110	**246030192**
X Evo	400	2007	2011	639110	**246030192**
X8 Euro3	400	2006	2008	639110	**246030192**
Ape Car - Max Diesel	420	1986	1996	2318775	**246030260**
Ape Tm P703-P703V Diesel	420	1987	2004	231877	**246030260**
Beverly	500	2002	2006	584533	**246030192**
Beverly Cruiser	500	2007	2012	58086R	**246030192**
Beverly Euro 3	500	2006	2008	58086R	**246030192**
Mp3 Lt E4 Sport - Business	500	2016	2016	641709	**246030281**
Mp3 Lt Sport - Business	500	2011	2013	639110	**246030192**
Mp3 Rl Sport - Business	500	2011	2012	639110	**246030192**
X9	500	2001	2002	584533	**246030192**
X9 Evolution	500	2003	2007	584533	**246030192**
X9 Evolution Abs	500	2006	2007	58086R	**246030192**
SUZUKI					
Ah50 Address	50	1992	1995	32800-40D10-000	**246030050**
Ah50 Address	50	1992	1995	32800-40D10-000	**246030051**
Aj Zz Sepia S	50	1995	1997	32800-40D10-000	**246030050**
Aj Zz Sepia S	50	1995	1997	32800-40D10-000	**246030051**
SYM					
Crox 50 Euro4	50	2017	2017	31600CT3A00	**246030060**
Fiddle Ii	50	2008	2008	31600CT3A00	**246030060**
Fiddle Ii S	50	2009	2013	31600CT3A00	**246030060**
Jet Euro X Eu2	50	2003	2007	31600M9Q000	**246030212**
Jet Sport X	50	2007	2011	31600M9Q000	**246030212**
Jet4	50	2009	2010	31600CT3A00	**246030060**
Jet4 R 2T	50	2011	2014	31600CT3A00	**246030060**
Simply Ii	50	2014	2014	31600CT3A00	**246030060**



Modello *Model*	CC	Da *From*	A *To*	OEM	Codice RMS *RMS Code*
Symphony	50	2009	2009	31600CT3A00	**246030060**
Symphony S	50	2010	2014	31600CT3A00	**246030060**
Symphony Sr	50	2010	2014	31600CT3A00	**246030060**
Symply	50	2007	2008	31600CT3A00	**246030060**
Symply Ii	50	2009	2009	31600CT3A00	**246030060**
X Pro	50	2013	2013	31600CT3A00	**246030060**
Euro Mx	125	2002	2002	31600M9Q000	**246030212**
Euro Mx E2	125	2003	2004	31600M9Q000	**246030212**
Fiddle Ii	125	2008	2013	31600CT3A00	**246030060**
Husky	125	1999	2000	31600M9Q000	**246030212**
Jet V	125	2011	2011	31600M9Q000	**246030212**
Jet4	125	2009	2010	31600CT3A00	**246030060**
Shark	125	1999	2002	31600M9Q000	**246030212**
Symphony	125	2009	2009	31600CT3A00	**246030060**
Symphony S	125	2009	2014	31600CT3A00	**246030060**
Symphony Sr	125	2010	2010	31600CT3A00	**246030060**
Symphony Sr	125	2012	2014	31600CT3A00	**246030060**
Symply	125	2007	2008	31600CT3A00	**246030060**
Symply II	125	2009	2010	31600CT3A00	**246030060**
Symply II	125	2014	2014	31600CT3A00	**246030060**
X Pro	125	2013	2013	31600ZDA000	**246030060**
Euro Mx	150	2002	2002	31600M9Q000	**246030212**
Euro Mx Eu2	150	2003	2004	31600M9Q000	**246030212**
Fiddle II	150	2010	2010	31600CT3A00	**246030060**
Fiddle II	150	2012	2012	31600CT3A00	**246030060**
Shark	150	2000	2001	31600M9Q000	**246030212**
Symphony S	150	2009	2014	31600CT3A00	**246030060**
Symphony Sr	150	2010	2010	31600CT3A00	**246030060**
Symphony Sr	150	2012	2014	31600CT3A00	**246030060**
YAMAHA					
Bw'S	50	2004	2016	5RNH19600000	**246030070**
Bw'S	50	2004	2016	5RNH19600000	**246030072**
Bw'S Naked	50	2003	2004	5RNH19600000	**246030070**
Bw'S Naked	50	2003	2004	5RNH19600000	**246030072**
Bw'S Naked	50	2009	2016	5RNH19600000	**246030070**
Bw'S Naked	50	2009	2016	5RNH19600000	**246030072**
Bw'S Next Generation	50	2003	2006	5RNH19600000	**246030070**
Bw'S Next Generation	50	2003	2006	5RNH19600000	**246030072**
Bw'S Original Euro2	50	2003	2003	5RNH19600000	**246030070**
Bw'S Original Euro2	50	2003	2003	5RNH19600000	**246030072**
Bw'S R	50	2001	2001	5FXH19600000	**246030050**
Bw'S R	50	2001	2001	5FXH19600000	**246030051**
Cs Jog R	50	2002	2002	5RNH19600000	**246030070**
Cs Jog R	50	2002	2002	5RNH19600000	**246030072**
Cs Jog R	50	2006	2015	5RNH19600000	**246030070**
Cs Jog R	50	2006	2015	5RNH19600000	**246030072**
Cs Jog R Euro2	50	2002	2005	5RNH19600000	**246030070**
Cs Jog R Euro2	50	2002	2005	5RNH19600000	**246030072**
Cw L Bw'S	50	2003	2004	5RNH19600000	**246030070**
Cw L Bw'S	50	2003	2004	5RNH19600000	**246030072**
Dt R - Dt X	50	2007	2011	5RNH19600000	**246030070**
Dt R - Dt X	50	2007	2011	5RNH19600000	**246030072**
Tzr	50	2003	2012	5RNH19600000	**246030070**
Tzr	50	2003	2012	5RNH19600000	**246030072**
Tzr Rr	50	2005	2005	5RNH19600000	**246030070**
Tzr Rr	50	2005	2005	5RNH19600000	**246030072**
Yh Why	50	2006	2006	5RNH19600000	**246030070**
Yh Why	50	2006	2006	5RNH19600000	**246030072**

Modello *Model*	CC	Da *From*	A *To*	OEM	Codice RMS *RMS Code*
Yh Why Euro2	50	2003	2005	5RNH19600000	**246030070**
Yh Why Euro2	50	2003	2005	5RNH19600000	**246030072**
Yn Neo'S	50	2004	2016	5RNH19600000	**246030070**
Yn Neo'S	50	2004	2016	5RNH19600000	**246030072**
Yn Neo'S Euro2	50	2002	2003	5RNH19600000	**246030070**
Yn Neo'S Euro2	50	2002	2003	5RNH19600000	**246030072**
Yn R Neo'S	50	2002	2002	5RNH19600000	**246030070**
Yn R Neo'S	50	2002	2002	5RNH19600000	**246030072**
Yq Aerox	50	2004	2012	5RNH19600000	**246030070**
Yq Aerox	50	2004	2012	5RNH19600000	**246030072**
Yq L Aerox Euro2	50	2003	2003	5RNH19600000	**246030070**
Yq L Aerox Euro2	50	2003	2003	5RNH19600000	**246030072**
Yn Neo'S	100	1999	2002	5RNH19600000	**246030070**
Yn Neo'S	100	1999	2002	5RNH19600000	**246030072**
Vp X-City	125	2008	2011	5BN819600000	**246030222**
Xt125R	125	2005	2007	5RNH19600000	**246030070**
Xt125R	125	2005	2007	5RNH19600000	**246030072**
Xt125X	125	2005	2007	5RNH19600000	**246030070**
Xt125X	125	2005	2007	5RNH19600000	**246030072**
Xvs Drag Star	125	2000	2004	5BN819600000	**246030222**
Yp125 Majesty	125	1998	2002	5NRW19600000	**246030011**
Yp125 Majesty	125	1998	2002	5NRW19600000	**246030012**
Yp125 Majesty	125	2001	2002	4HMH19600000	**246030090**
Yp125 Majesty	125	2001	2002	4HMH19600000	**246030092**
Yp125E Majesty	125	2003	2009	4HMH19600000	**246030090**
Yp125E Majesty	125	2003	2009	4HMH19600000	**246030092**
Yp125R X-Max	125	2006	2009	5BN819600000	**246030222**
Yp125R X-Max	125	2010	2012	4JH819600100	**246030232**
Yp125R X-Max	125	2010	2013	4HMH19600000	**246030090**
Yp125R X-Max	125	2010	2013	4HMH19600000	**246030092**
Yp125R X-Max	125	2014	2016	5BN819600000	**246030222**
Yp125R X-Max Abs	125	2011	2011	4HMH19600000	**246030090**
Yp125R X-Max Abs	125	2011	2011	4HMH19600000	**246030092**
Yp125Ra X-Max Abs	125	2013	2013	4HMH19600000	**246030090**
Yp125Ra X-Max Abs	125	2013	2013	4HMH19600000	**246030092**
Yp125Ra X-Max Abs	125	2014	2017	5BN819600000	**246030222**
Yzf-R125	125	2008	2011	4JH819600100	**246030232**
Yzf-R125	125	2008	2013	4HMH19600000	**246030090**
Yzf-R125	125	2008	2013	4HMH19600000	**246030092**
Xn Teo'S	150	2001	2002	5NRW19600000	**246030011**
Xn Teo'S	150	2001	2002	5NRW19600000	**246030012**
Yp150 Majesty	150	2000	2002	5NRW19600000	**246030011**
Yp150 Majesty	150	2000	2002	5NRW19600000	**246030012**
Yp150 Majesty	150	2001	2002	4HMH19600000	**246030090**
Yp150 Majesty	150	2001	2002	4HMH19600000	**246030092**
Yp180E Majesty	180	2003	2006	4HMH19600000	**246030090**
Yp180E Majesty	180	2003	2006	4HMH19600000	**246030092**
Vp X-City	250	2007	2008	5BN819600000	**246030222**
Vp X-City	250	2009	2015	5BN819600000	**246030222**
Xvs Drag Star	250	2001	2004	5BN819600000	**246030222**
Ybr	250	2007	2011	5BN819600000	**246030222**
Yp250 Majesty	250	2000	2001	4JH819600100	**246030232**
Yp250R Black X-Max	250	2009	2009	5BN819600000	**246030222**
Yp250R X-Max	250	2007	2009	5BN819600000	**246030222**
Yp250R X-Max	250	2010	2013	4HMH19600000	**246030090**
Yp250R X-Max	250	2010	2013	4HMH19600000	**246030092**
Yp250R X-Max	250	2014	2016	5BN819600000	**246030222**
Yp250R X-Max Sport	250	2011	2012	4HMH19600000	**246030090**



REGOLATORI DI TENSIONE

REGULATORS

Modello *Model*	**CC**	**Da** *From*	**A** *To*	**OEM**	**Codice RMS** *RMS Code*
Yp250R X-Max Sport	250	2011	2012	4HMH19600000	**246030092**
Yp250Ra X-Max Abs	250	2011	2013	4HMH19600000	**246030090**
Yp250Ra X-Max Abs	250	2011	2013	4HMH19600000	**246030092**
Yp250Ra X-Max Abs	250	2014	2016	5BN819600000	**246030222**
Xp T-Max	500	2001	2003	4JH819600100	**246030232**
Fzr R	600	1994	1995	4JH819600100	**246030232**
Yzf R Thunder Cat	600	1996	2002	4JH819600100	**246030232**
Yzf-R6	600	1999	2002	4JH819600100	**246030232**
Xvs A Drag Star Classic	650	1998	2001	5BN819600000	**246030222**
Xvs Drag Star	650	1997	1999	4JH819600100	**246030232**
Xvs Drag Star	650	2000	2000	5BN819600000	**246030222**
Szr	660	1995	1997	4JH819600100	**246030232**
Xt660Z Tenere	660	1994	1996	4JH819600100	**246030232**
Tdm	850	1996	2001	4JH819600100	**246030232**
Yzf-R1	1000	1998	2001	4JH819600100	**246030232**
Bt Bulldog	1100	2002	2004	5BN819600000	**246030222**
Bt Bulldog	1100	2005	2006	5BN819600000	**246030222**
Xvs A Drag Star Classic	1100	2000	2003	5BN819600000	**246030222**
Xvs Drag Star	1100	1999	2002	5BN819600000	**246030222**
Xv A Wild Star	1600	1999	2002	5BN819600000	**246030222**



246030011

BENELLI: R.O. R51540101A0
MALAGUTI: R.O. 02601400
MBK: R.O. 5MFV19600000
YAMAHA: R.O. 5NRW19600000



246030012

BENELLI: R.O. R51540101A0
MALAGUTI: R.O. 02601400
MBK: R.O. 5MFW19600000
YAMAHA: R.O. 5NRW19600000



246030020

PIAGGIO: R.O. 2308245 • 58074R



246030030

PIAGGIO: R.O. 1616395



246030040

246030042

Di primo equipaggiamento | *OEM Quality*

GILERA: R.O. 2940165
PIAGGIO: R.O. 2940165 • 291931



246030050

246030051

APRILIA: R.O. AP8212540 • AP8212799 • AP8224297
MALAGUTI: R.O. 02601100
MBK: R.O. 4VVH19600100
SUZUKI: R.O. 32800-40D10-000
YAMAHA: R.O. 5FXH19600000



246030060

APRILIA: R.O. AP8224102
HONDA: R.O. 31600GBL871
SYM: R.O. 31600CT3A00



246030070

246030072

KYMCO: R.O. 00169004
MALAGUTI: R.O. 02601500
MBK: R.O. 5RNH19600000
YAMAHA: R.O. 5NRH19600000



246030081

246030082

Di primo equipaggiamento | *OEM Quality*

KYMCO: R.O. 00168780
MALAGUTI: R.O. 02601800





REGOLATORI DI TENSIONE

REGULATORS

246030090

246030092

MBK: R.O. 4HMH19600000
YAMAHA: R.O. 4HMH19600000



246030100

HONDA: R.O. 31600-KFG-860
MALAGUTI: R.O. 02601900



246030102

HONDA: R.O. 31600-KFG-860
MALAGUTI: R.O. 02601900
PIAGGIO: R.O. 496454



246030112

KYMCO: R.O. 00168139



246030122

Di primo equipaggiamento | *OEM Quality*
KYMCO: R.O. 00169587
MALAGUTI: R.O. 02603000



246030132

Di primo equipaggiamento | *OEM Quality*
KYMCO: R.O. 00131033



246030142

Di primo equipaggiamento | *OEM Quality*
KYMCO: R.O. 00177005



246030152

Di primo equipaggiamento | *OEM Quality*
APRILIA: R.O. AP8124648
DERBI: R.O. 58096R
GILERA: R.O. 58096R
PIAGGIO: R.O. 58096R • 82587R



246030162

Di primo equipaggiamento | *OEM Quality*
APRILIA: R.O. AP8127418
BENELLI: R.O. R51540081A0
DERBI: R.O. 58096R
GILERA: R.O. 58090R
MALAGUTI: R.O. 02602900
PIAGGIO: R.O. 58090R • 486062 • 58090R5 • 82501R





246030172

Di primo equipaggiamento | *OEM Quality*

KYMCO: R.O. 00168783



246030182

Di primo equipaggiamento | *OEM Quality*

APRILIA: R.O. 639751 • 641788
DERBI: R.O. 639751 • 641788
PIAGGIO: R.O. 639751 • 641788



246030192

Di primo equipaggiamento | *OEM Quality*

APRILIA: R.O. AP8127809
DERBI: R.O. 58086R
PIAGGIO: R.O. 58086R • 639110 • 584533



246030212

Di primo equipaggiamento | *OEM Quality*

HONDA: R.O. 31600-KR1-761
KYMCO: R.O. 00172385
SYM: R.O. 316001199000



246030222

YAMAHA: R.O. 5BN819600000



246030232

YAMAHA: R.O. 4JH8196001000



246030241

246030242

HONDA: R.O. 31600-KTF-841



246030260

PIAGGIO: R.O. 231877 • 2318775



246030270

PIAGGIO: R.O. 157714 • 256023



246030281

PIAGGIO: R.O. 641709 • 641533• 58208R



246030292

PIAGGIO: R.O. 58204R



246030302

Di primo equipaggiamento | *OEM Quality*

KYMCO: R.O. 00131148





REGOLATORI DI TENSIONE

REGULATORS

246030312

KAWASAKI: R.O. 21066Y003



246030321

PIAGGIO: R.O. 2180605



246030330

BERU

REGOLATORE GER-024 | *GER-024 REGULATOR*
MOTO GUZZI: GU29703800R



246030342

Di primo equipaggiamento | *OEM Quality*
KYMCO: R.O. 00131128



246030350 NEW

GUILERA

Di primo equipaggiamento | *OEM Quality*
DERBI: R.O. 00H01007841



246030360 NEW

GUILERA

Di primo equipaggiamento | *OEM Quality*
APRILIA: 864660
DERBI: 864660
GILERA: 864660



246030370 NEW

GUILERA

Di primo equipaggiamento | *OEM Quality*
APRILIA: 898891
DERBI: 898891
GILERA: 898891





Modello *Model*	CC	Da *From*	A *To*	OEM	Codice RMS *RMS Code*
APRILIA					
Amico	50	1994	1994	AP8206459	**246390020**
Amico Gl-Gle	50	1993	1995	AP8206459	**246390020**
Amico Lx- Sport-Cat	50	1992	1993	AP8224103	**246390020**
Area 51	50	1998	2000	AP8206459	**246390020**
Gulliver	50	1995	1998	AP8206459	**246390020**
Gulliver Lc	50	1996	1998	AP8206459	**246390020**
Mojito Custom	50	1999	2003	AP2QCA000041	**246390160**
Mojito Custom 2T Motore Piaggio	50	2004	2010	82530R	**246390010**
Mojito Retro	50	1999	2003	AP2QCA000041	**246390160**
Rally	50	1995	2003	AP8206459	**246390020**
Rally Liquid Cooled	50	1996	1999	AP8206459	**246390020**
Rs	50	2006	2010	96921R	**246390080**
Scarabeo	50	1993	2005	AP8206459	**246390020**
Scarabeo 2T	50	2014	2014	82530R	**246390010**
Scarabeo 2T Eu2 Motore Piaggio	50	2010	2012	82530R	**246390010**
Scarabeo 2T Net	50	2009	2010	82530R	**246390010**
Scarabeo 4T	50	2002	2006	AP8570105	**246390080**
Scarabeo 4T 4V	50	2010	2012	96921R	**246390080**
Scarabeo 4T 4V	50	2014	2014	96921R	**246390080**
Scarabeo 4T 4V Net	50	2009	2010	96921R	**246390080**
Scarabeo 4T Restyling Eu3	50	2006	2009	96921R	**246390080**
Scarabeo Ditech	50	2001	2004	AP2QCA000041	**246390160**
Scarabeo Quattro	50	2009	2009	96921R	**246390080**
Scarabeo Street	50	2005	2006	AP8515107	**246390010**
Scarabeo Street 2T Restyling	50	2006	2009	82530R	**246390010**
Sonic	50	1998	2007	AP8224103	**246390020**
Sonic Gp	50	1998	2008	AP8224103	**246390020**
Sport City One 2T	50	2008	2011	82530R	**246390010**
Sport City One 4T	50	2008	2010	96921R	**246390080**
Sr	50	1993	1996	AP8206102	**246390020**
Sr Ditech Euro 2	50	2002	2004	AP2QCA000041	**246390160**
Sr H2O Ditech E Carburatore	50	2000	2004	AP2QCA000041	**246390160**
Sr Iniezione E Carburatore	50	2014	2014	82530R	**246390010**
Sr Iniezione E Carburatore	50	2014	2014	96921R	**246390080**
Sr Liquid Cooled	50	1994	1996	AP8224103	**246390020**
Sr Motard 2T	50	2012	2014	82530R	**246390010**
Sr Motard 4T 4V	50	2013	2014	96921R	**246390080**
Sr R	50	2004	2009	82530R	**246390010**
Sr R	50	2004	2009	96921R	**246390080**
Sr R Factory Ie E Carburatore	50	2010	2014	82530R	**246390010**
Sr R Factory Ie E Carburatore	50	2010	2014	96921R	**246390080**
Sr R Factory Motore Aprilia	50	2005	2005	AP2QCA000041	**246390160**
Sr Stealth	50	1997	2000	AP8206459	**246390020**
Sr Street	50	2003	2012	AP8515107	**246390010**
Sr Street	50	2003	2012	AP8570105	**246390080**
Sr Www	50	1997	2001	AP8206459	**246390020**
Scarabeo 4T	100	2001	2005	AP8551026	**246390110**
Scarabeo 4T	100	2010	2012	96928R	**246390110**
Scarabeo 4T	100	2014	2014	96928R	**246390110**
Scarabeo 4T Net	100	2009	2009	96928R	**246390110**
Scarabeo 4T Net Eu3	100	2010	2010	96928R	**246390110**
Scarabeo 4T Restyling	100	2006	2009	96928R	**246390110**
Scarabeo Motore Yamaha	100	2000	2000	AP8510653	**246390170**
Atlantic	125	2003	2005	AP8577046	**246390220**
Atlantic Eu3	125	2010	2012	82611R	**246390090**
Atlantic Eu3 125-250	125	2006	2008	AP8577046	**246390220**
Leonardo	125	1999	2002	AP0295625	**246390210**
Leonardo St	125	2001	2004	AP0295625	**246390210**
Mojito	125	2008	2008	82611R	**246390090**
Mojito Retro' - Custom	125	1999	2001	AP8550442	**246390100**
Scarabeo	125	2004	2006	AP8577046	**246390220**
Scarabeo Motore Rotax	125	1999	2004	AP0296390	**246390210**
Sport City Cube	125	2008	2010	82611R	**246390090**
Sport City Euro3	125	2006	2008	AP8577046	**246390220**
Sport City One 4T Euro3	125	2008	2011	82611R	**246390090**
Sport City Street	125	2012	2012	82611R	**246390090**
Sr Max	125	2011	2014	58142R	**246390220**
Sr Motard	125	2012	2014	82611R	**246390090**
Atlantic Eu3 125-250	250	2006	2008	AP8577046	**246390220**
Leonardo	250	1999	2001	AP8122628	**246390190**
Leonardo St	250	2001	2001	AP8122628	**246390190**
Scarabeo Light	250	2006	2008	AP8577046	**246390220**
Sport City Cube	250	2008	2012	58142R	**246390220**
Leonardo	300	2002	2004	AP8552123	**246390190**
Scarabeo Light	300	2009	2010	58142R	**246390220**
Sport City Street	300	2012	2012	58142R	**246390220**
Sr Max	300	2011	2014	58142R	**246390220**
Atlantic Sprint 400-500	400	2005	2008	AP8560025	**246390230**
Scarabeo Light 400-500	400	2006	2008	82699R	**246390230**
Atlantic	500	2001	2004	AP8560025	**246390230**
Atlantic Sprint 400-500	500	2005	2008	AP8560025	**246390230**
Scarabeo	500	2003	2006	AP8560025	**246390230**
Scarabeo Light 400-500	500	2006	2008	82699R	**246390230**
ATU					
Cx 50 2T Curio	50	1995	1997	-	**246390040**
Meteorit Kb 50 2T Edition	50	1998	1998	-	**246390040**
BENELLI					
491 Gt	50	1998	1999	R19240011A0	**246390020**
491 Racing	50	1998	1999	R19240011A0	**246390020**
491 Rr	50	1999	2001	R19240011A0	**246390020**
491 Rr Morini	50	2003	2004	R013434100000	**246390160**
491 Sp	50	1999	1999	R19240011A0	**246390020**
491 Sport	50	1998	1999	R19240011A0	**246390020**
491 St	50	1999	2001	R19240011A0	**246390020**
491 St Morini	50	2003	2003	R013434100000	**246390160**
K2	50	1998	2001	R19240011A0	**246390020**
K2 Liquid Cooled	50	1998	2001	R19240011A0	**246390020**
Naked	50	2002	2002	R19240011A0	**246390020**
Naked Morini	50	2003	2004	R013434100000	**246390160**
Pepe	50	1999	2001	R19240011A0	**246390020**
Pepe Lx	50	2003	2004	R19240011A0	**246390020**
Velvet 125-150	125	1999	2001	R19010111A0	**246390150**
Velvet Touring 125-150	125	2002	2003	R19010111A0	**246390150**
Velvet 125-150	150	1999	2001	R19010111A0	**246390150**
Velvet Touring 125-150	150	2002	2003	R19010111A0	**246390150**
Velvet	250	1999	2001	R13040191A0	**246390190**
Velvet Touring	250	2002	2003	R13040191A0	**246390190**
DERBI					
Atlantis	50	1999	2001	00G03901891	**246390160**
Atlantis	50	2001	2001	00G03904891	**246390160**
Atlantis 2T	50	2010	2010	82530R	**246390010**
Atlantis 2T Eu2	50	2007	2009	82530R	**246390010**
Atlantis 4T Eu2	50	2007	2007	96921R	**246390080**



MOTORINI D'AVVIAMENTO

STARTER MOTORS

Modello *Model*	CC	Da *From*	A *To*	OEM	Codice RMS *RMS Code*
Atlantis 50-100 4T	50	2004	2006	96921R	**246390080**
Atlantis 50-100 4T	50	2004	2006	96928R	**246390110**
Atlantis Lc	50	1999	2001	00G03901891	**246390160**
Atlantis Lc	50	1999	2001	00G03904891	**246390160**
Atlantis O2	50	2002	2002	82530R	**246390010**
Atlantis O2 Bullet	50	2003	2005	82530R	**246390010**
Atlantis O2 City	50	2003	2006	82530R	**246390010**
Atlantis O2 Red Bullet	50	2003	2003	82530R	**246390010**
Atlantis O2 Two Chic	50	2005	2005	82530R	**246390010**
Boulevard 2T	50	2009	2014	82530R	**246390010**
Boulevard 4T Eu2 25 Km/H	50	2009	2009	96921R	**246390080**
Gp1	50	2001	2003	82530R	**246390010**
Gp1 E2	50	2003	2003	82530R	**246390010**
Gp1 Euro2	50	2005	2005	82530R	**246390010**
Gp1 Open Eu2	50	2006	2009	82530R	**246390010**
Gp1 Race Eu2	50	2005	2007	82530R	**246390010**
Gpr Nude & Gpr Nude Tuning	50	2006	2008	96921R	**246390080**
Gpr Nude Sport	50	2006	2006	96921R	**246390080**
Gpr Racing Eu2	50	2006	2006	96921R	**246390080**
Gpr Replica & Gpr R Eu2	50	2006	2006	96921R	**246390080**
Gpr Replica 2T Malossi	50	2007	2007	96921R	**246390080**
Gpr Replica Pesek Eu2	50	2007	2007	96921R	**246390080**
Hunter	50	1996	1997	00G03901891	**246390160**
Paddock	50	1998	1999	00G03901891	**246390160**
Predator Lc	50	1998	2001	00G03901891	**246390160**
Predator Lc	50	1998	2001	00G03904891	**246390160**
Predator O2	50	1998	2001	00G03901891	**246390160**
Predator O2	50	1998	2001	00G03904891	**246390160**
Senda Sm Drd Pro Eu2	50	2005	2011	96921R	**246390080**
Senda Sm Drd Pro Eu2 2Ver	50	2005	2008	96921R	**246390080**
Sonar 2T	50	2009	2009	82530R	**246390010**
Variant Sport 2T	50	2012	2012	82530R	**246390010**
Atlantis	100	2000	2001	00G03905891	**246390080**
Atlantis 50-100 4T	100	2004	2006	96921R	**246390080**
Atlantis 50-100 4T	100	2004	2006	96928R	**246390110**
Boulevard 4T	100	2010	2011	96928R	**246390110**
Rambla 125-250	125	2008	2009	58142R	**246390220**
Rambla 125-250 E3 2Ver	125	2008	2008	58142R	**246390220**
Gp1	250	2006	2007	58064R	**246390220**
Gp1 Low Seat 250 Eu3	250	2007	2008	58142R	**246390220**
Gp1 Low Seat 250 Eu3	250	2007	2008	58142R	**246390220**
Rambla 125-250	250	2008	2009	58142R	**246390220**
Rambla 125-250 E3 2Ver	250	2008	2008	58142R	**246390220**
Rambla	300	2010	2011	58142R	**246390220**
GILERA					
Dna	50	2000	2002	82530R	**246390010**
Dna	50	2005	2007	82530R	**246390010**
Dna Gp Experience	50	2003	2004	82530R	**246390010**
Easy Moving	50	1995	1996	82530R	**246390010**
Ice	50	2001	2005	82530R	**246390010**
Runner	50	1997	2000	82530R	**246390010**
Runner Poggiali	50	2002	2002	82530R	**246390010**
Runner Purejet	50	2002	2007	96921R	**246390080**
Runner Purejet	50	2010	2011	96921R	**246390080**
Runner Purejet St	50	2008	2008	96921R	**246390080**
Runner Sp	50	2002	2007	82530R	**246390010**
Runner Sp	50	2010	2012	82530R	**246390010**
Runner Sp Special Edition	50	2007	2007	82530R	**246390010**

Modello *Model*	CC	Da *From*	A *To*	OEM	Codice RMS *RMS Code*
Runner Sp St & Simoncelli	50	2008	2009	82530R	**246390010**
Stalker	50	1997	2011	82530R	**246390010**
Stalker Naked	50	2008	2008	82530R	**246390010**
Stalker Special Edition	50	2007	2008	82530R	**246390010**
Storm	50	1994	1995	82530R	**246390010**
Storm Euro2	50	2007	2007	82530R	**246390010**
Typhoon	50	1994	1997	82530R	**246390010**
Typhoon X	50	1998	1999	82530R	**246390010**
Typhoon Xr	50	2000	2000	82530R	**246390010**
Dna 125-180	125	2001	2001	82611R	**246390090**
Nexus Euro3	125	2007	2008	82611R	**246390090**
Nexus Euro3 Ie	125	2008	2010	58142R	**246390220**
Runner 4T St Euro3	125	2008	2016	82611R	**246390090**
Runner Fx-Fxr 125-180	125	1997	2002	289094	**246390110**
Runner Vx	125	2005	2006	82611R	**246390090**
Runner Vx 4T Euro3	125	2006	2007	82611R	**246390090**
Runner Vx Race	125	2006	2006	82611R	**246390090**
Runner Vx Sc	125	2006	2007	82611R	**246390090**
Runner Vx-Vxr 125-180	125	2000	2001	82611R	**246390090**
Runner Vx-Vxr 125-200	125	2002	2004	82611R	**246390090**
Typhoon	125	1995	1998	289094	**246390110**
Typhoon X-Xr	125	1999	2000	289094	**246390110**
Dna 125-180	180	2001	2001	82611R	**246390090**
Runner Fx-Fxr 125-180	180	1997	2002	289094	**246390110**
Runner Vx-Vxr 125-180	180	2000	2001	82611R	**246390090**
Runner Vxr	200	2005	2006	82611R	**246390090**
Runner Vxr 4T St Euro3	200	2008	2011	82611R	**246390090**
Runner Vxr Euro3	200	2007	2007	82611R	**246390090**
Runner Vxr Race	200	2005	2006	82611R	**246390090**
Runner Vx-Vxr 125-200	200	2002	2004	82611R	**246390090**
Nexus Euro3	250	2006	2007	58142R	**246390220**
Nexus Sp Euro3	250	2006	2007	58142R	**246390220**
Oregon	250	2006	2010	58142R	**246390220**
Nexus Euro3	300	2008	2011	58142R	**246390220**
Fuoco 4T-4V Ie E3 Lt	500	2013	2014	82699R	**246390230**
Fuoco Euro3	500	2007	2013	82699R	**246390230**
Nexus	500	2003	2005	82699R	**246390230**
Nexus Euro3	500	2006	2011	82699R	**246390230**
Nexus Sp Euro3	500	2006	2007	82699R	**246390230**
HONDA					
Srx 90 It Shadow	90	1998	2000	-	**246390370**
Scv 100 Lead	100	2003	2007	-	**246390370**
Sh 100 Scoopy	100	1996	1997	-	**246390370**
Sj 100 Bali Ex	100	1996	2000	-	**246390370**
Fes 125 Pantheon	125	2004	2006	31200KGF901	**246390300**
Nes 125 @/ Arobase	125	2000	2002	31200KGF901	**246390300**
Pes 125 Ps I	125	2006	2013	31200KGF901	**246390300**
Ses 125 Dylan	125	2002	2006	31200KGF901	**246390300**
Sh 125	125	2001	2004	31200KGF901	**246390300**
Sh 125 I	125	2005	2008	31200KGF901	**246390300**
Nes 150 @/ Arobase	150	2000	2006	31200KGF901	**246390300**
Pes 150 Ps I	150	2006	2010	31200KGF901	**246390300**
Sh 150	150	2001	2004	31200KGF901	**246390300**
Sh 150 I	150	2005	2008	31200KGF901	**246390300**
Cn 250 Helix Spazio	250	1991	1999	-	**246390240**
Fes 250 Foresight	250	1998	2000	31200KAB018	**246390200**
Nss 250 A Jazz Abs	250	2001	2004	31200KAB018	**246390200**
Nss 250 Jazz	250	2001	2001	31200KAB018	**246390200**



Modello *Model*	CC	Da *From*	A *To*	OEM	Codice RMS *RMS Code*
Nss 300 A Forza Abs	300	2013	2017	31200KTW901	**246390430**
Nss 300 Forza	300	2013	2017	31200KTW901	**246390430**
Sh 300 A I Abs	300	2011	2017	31200KTW901	**246390430**
ITALJET					
Formula 50 Ac Dd	50	1995	1997	337200050	**246390160**
Formula 50 Ac Dd Race	50	1996	1996	337200050	**246390160**
Formula 50 Ac Dd Sport	50	1998	1998	337200050	**246390160**
Formula 50 Ac Dt	50	1997	2001	337200050	**246390160**
Formula 50 Lc Dd	50	1997	2000	337200050	**246390160**
Torpedo 50 2T	50	1998	1999	337200050	**246390160**
Formula 125	125	1997	2001	337200050	**246390160**
Jupiter 125	125	2002	2003	4874800179	**246390150**
Millennium 125	125	2000	2003	4874800179	**246390150**
Jupiter 250	250	2001	2003	-	**246390190**
KYMCO					
Agility 2T R16	50	2010	2010	00104202	**246390120**
Agility 2T R16	50	2012	2012	00104202	**246390120**
Agility 4T Carry	50	2011	2011	00107242	**246390130**
Agility 4T R10	50	2006	2008	00107242	**246390130**
Agility 4T R12	50	2007	2008	00107242	**246390130**
Agility 4T R16	50	2008	2009	00131025	**246390130**
Agility 4T R16	50	2012	2012	00131025	**246390130**
Agility Plus 2T	50	2014	2014	00104202	**246390120**
Agility Plus 4T	50	2014	2014	00107242	**246390130**
Agility R12	50	2005	2005	00107242	**246390130**
Agility R12 Ecs	50	2016	2016	00107242	**246390130**
Agility Rs	50	2009	2009	00131025	**246390130**
Agility Rs Naked 2T	50	2010	2010	00104202	**246390120**
B&W	50	2002	2002	00104202	**246390120**
B&W Euro2	50	2003	2003	00104202	**246390120**
Cx	50	1993	1993	00104002	**246390010**
Cx Super	50	1994	1997	00104002	**246390010**
Dink 50 4T	50	2007	2007	00107242	**246390130**
Dink Classic Euro2	50	2003	2003	00104202	**246390120**
Dink Lc	50	1998	2002	00104202	**246390120**
Dj W	50	1994	2000	00104002	**246390010**
Dj X	50	1991	1992	00104002	**246390010**
Dj Y	50	1993	1993	00104002	**246390010**
Fever Zx	50	1999	2000	00104002	**246390010**
Fever Zx Euro2	50	2003	2004	00104002	**246390010**
Filly	50	1998	2000	00107242	**246390130**
Heroism	50	1995	1997	00104202	**246390120**
K 12	50	1995	2000	00104002	**246390010**
Kb	50	1995	2000	00104002	**246390010**
Kxr	50	2004	2004	00104202	**246390120**
Like 2T	50	2009	2009	00131068	**246390120**
Like 4T	50	2009	2009	00131025	**246390130**
Maxxer	50	2005	2005	00104202	**246390120**
Mxer	50	2002	2003	00104202	**246390120**
Mxer Euro2	50	2004	2004	00104202	**246390120**
Mxu	50	2006	2007	00104202	**246390120**
Mxu Sr	50	2006	2006	00104202	**246390120**
People	50	1999	2000	00104202	**246390120**
People	50	2004	2004	00104202	**246390120**
People Euro2	50	2003	2003	00104202	**246390120**
People Euro2	50	2008	2008	00104202	**246390120**
People Euro2	50	2011	2011	00104202	**246390120**
People S	50	2005	2008	00104202	**246390120**

Modello *Model*	CC	Da *From*	A *To*	OEM	Codice RMS *RMS Code*
People S 4T	50	2006	2008	00107242	**246390130**
Sento	50	2008	2008	00107242	**246390130**
Sniper	50	1993	1993	00104202	**246390120**
Sniper Dd	50	1994	1996	00104202	**246390120**
Super 8	50	2007	2007	00131025	**246390130**
Super 8 2T	50	2009	2009	00131068	**246390120**
Super 8 2T	50	2013	2013	00104202	**246390120**
Super 8 4T	50	2009	2009	00131025	**246390130**
Super 8 4T	50	2013	2013	00131025	**246390130**
Super 9	50	2000	2000	00104202	**246390120**
Super 9 Sport Euro2	50	2003	2004	00104202	**246390120**
Top Boy	50	1997	2000	00104202	**246390120**
Vitality 2T	50	2004	2004	00104202	**246390120**
Vitality 4T	50	2004	2004	00104025	**246390130**
Yup	50	2002	2002	00104202	**246390120**
Yup Euro2	50	2003	2003	00104202	**246390120**
Downtown 125I	125	2009	2016	00131063	**246390291**
Downtown E4	125	2016	2016	00131063	**246390291**
G-Dink	125	2012	2012	00128751	**246390250**
G-Dink	125	2012	2012	00128751	**246390252**
K-Xct I	125	2012	2014	00131063	**246390291**
Movie Xl 125-150	125	2001	2001	00128741	**246390140**
People Gti	125	2010	2010	00131063	**246390291**
People Gti	125	2014	2014	00131063	**246390291**
People Gti E4 I	125	2016	2016	00131063	**246390291**
X-Town Cbs	125	2016	2016	00131063	**246390291**
Movie Xl 125-150	150	2001	2001	00128741	**246390140**
Agility 200I R16	200	2010	2010	00126011	**246390140**
Downtown I	200	2010	2010	00131056	**246390322**
People Gti	200	2010	2010	00131056	**246390322**
People Gti	200	2014	2014	00131056	**246390322**
B&W	250	2000	2000	00128750	**246390271**
B&W Euro2	250	2003	2003	00128750	**246390271**
Grand Dink	250	2001	2002	00128750	**246390271**
Grand Dink Euro2	250	2003	2004	00128750	**246390271**
People Lc	250	2003	2004	00128750	**246390271**
People S	250	2006	2006	00128750	**246390271**
People S 250I	250	2007	2007	00128750	**246390271**
X Citing	250	2005	2005	00128750	**246390271**
X Citing I	250	2006	2007	00128750	**246390271**
Yup	250	2003	2003	00128750	**246390271**
Downtown 300I	300	2009	2009	00131056	**246390322**
Downtown Abs	300	2010	2010	00131056	**246390322**
Downtown Abs I	300	2011	2016	00131056	**246390322**
Downtown I	300	2011	2011	00131056	**246390322**
G-Dink	300	2012	2012	00128750	**246390271**
K-Xct I	300	2012	2012	00131056	**246390322**
K-Xct I Abs	300	2014	2014	00131056	**246390322**
People Gti	300	2010	2011	00131056	**246390322**
People Gti	300	2014	2014	00131056	**246390322**
People Gti Abs	300	2012	2012	00131056	**246390322**
People Gti Abs	300	2014	2014	00131056	**246390322**
People Gti Abs E4	300	2016	2016	00131056	**246390322**
People S 300I	300	2008	2008	00128750	**246390271**
X Citing 300I	300	2008	2008	00128750	**246390271**
X Citing 300I R	300	2008	2009	00128750	**246390271**
Downtown Abs E4	350	2016	2016	00131056	**246390322**
Downtown I Abs	350	2015	2015	00131056	**246390322**



MOTORINI D'AVVIAMENTO

STARTER MOTORS

Modello *Model*	CC	Da *From*	A *To*	OEM	Codice RMS *RMS Code*
X Citing I	400	2013	2013	00131156	**246390382**
X Citing I	400	2015	2015	00131156	**246390382**
X Citing I Abs	400	2014	2015	00131156	**246390382**
X Citing I Abs E4	400	2016	2016	00131156	**246390382**
LML					
Star Deluxe	125	-	-	C-3727628	**246390450**
Star Deluxe	150	-	-	C-3727628	**246390450**
MALAGUTI					
Centro Base	50	1993	1994	02404400	**246390020**
Centro Sl	50	1994	1998	02404400	**246390020**
Centro Sl Kat	50	1999	2000	02404400	**246390020**
Ciak	50	1999	2000	74800200	**246390020**
Ciak Master Euro 2	50	2006	2006	02404400	**246390020**
Ciak Mono Euro 2	50	2003	2003	02404400	**246390020**
Ciak Mono Euro 2 2.3	50	2003	2003	02404400	**246390020**
Ciak Td	50	2000	2001	74800200	**246390020**
Crosser Cr1	50	1995	1998	62211800	**246390160**
F10 Jet Line	50	1992	1998	02404400	**246390020**
F10 Kat	50	1999	2000	02404400	**246390020**
F10 Restyling Eu1	50	2001	2002	02404400	**246390020**
F10 Restyling Eu2-2.3	50	2003	2004	02404400	**246390020**
F10 Restyling Euro2	50	2002	2003	02404400	**246390020**
F10 Restyling Euro2	50	2006	2006	02404400	**246390020**
F12 Aria Restyling Euro 2	50	2006	2006	02404400	**246390020**
F12 Lc Restyling Euro 2	50	2006	2006	02404400	**246390020**
F12 Phantom	50	1994	1998	02404400	**246390020**
F12 Phantom Euro1	50	1999	2000	02404400	**246390020**
F12 Phantom Lc	50	1994	1998	02404400	**246390020**
F12 Phantom Lc Euro1	50	1999	2000	02404400	**246390020**
F12 Phantom Lc Restyling Eu1	50	2001	2002	02404400	**246390020**
F12 Phantom Lc Restyling Eu2	50	2002	2002	02404400	**246390020**
F12 Phantom Lc Restyling Eu2-2.3	50	2003	2004	02404400	**246390020**
F12 Phantom Lc Twin Disks	50	1998	1998	02404400	**246390020**
F12 Phantom Restyling Eu1	50	2001	2002	02404400	**246390020**
F12 Phantom Restyling Eu2	50	2002	2002	02404400	**246390020**
F12 Phantom Restyling Eu2-2.3	50	2003	2004	02404400	**246390020**
F12R Phantom Lc	50	2007	2010	02404400	**246390020**
F15 Fire Fox	50	1996	1998	74800200	**246390020**
F15 Fire Fox Air Cooled	50	2005	2006	02404400	**246390020**
F15 Fire Fox Euro2	50	2002	2003	02404400	**246390020**
F15 Fire Fox Restyling Euro2-2.3	50	2003	2004	02404400	**246390020**
F15 Fire Fox Twin Disks & Special	50	1998	1999	02404400	**246390020**
F15 Fire Fox Twin Disks Digit Kat	50	1998	2000	02404400	**246390020**
F15 Lc Restyling Euro 2	50	2004	2005	02404400	**246390020**
F15 Lc-Tds Restyling Euro 1	50	2001	2001	02404400	**246390020**
Grizzly 4 Wheels	50	2004	2009	02404400	**246390020**
Yesterday - Yesterday Euro	50	1997	2000	02404400	**246390020**
Ciak Master	125	2004	2004	02404400	**246390020**
Madison	125	1999	2001	74800300	**246390150**
Madison R Restyling	125	2002	2002	74800300	**246390150**
Madison R Restyling Euro2	125	2003	2004	74800400	**246390150**
Phantom Max	125	2003	2003	74800400	**246390150**
Madison T	150	1999	2001	74800300	**246390150**
Password	250	2005	2006	74800500	**246390190**
Password Eu3	250	2007	2008	74800500	**246390190**

Modello *Model*	CC	Da *From*	A *To*	OEM	Codice RMS *RMS Code*
MBK					
Yh Flipper	50	2001	2002	4CUH18000000	**246390020**
Yh Flipper Catalitico	50	1999	2000	4CUH18001000	**246390020**
Xq Thunder	125	2001	2002	5DSH18000000	**246390150**
Yp E Skyliner	125	2003	2003	5NRH18000000	**246390150**
Yp Skyliner	125	2001	2002	5DSH18000000	**246390150**
Xn Doodo	150	2001	2002	5DSH18000000	**246390150**
Xq Thunder	150	2001	2002	5DSH18000000	**246390150**
Yp Skyliner	150	2001	2002	5DSH18000000	**246390150**
Yp E Skyliner	180	2003	2003	5DSH18000000	**246390150**
Yp Skyliner	250	2000	2003	4HC818900000	**246390190**
Yp Skyliner Abs	250	2003	2003	4HC818900000	**246390190**
Xc Kilibre	300	2003	2003	4HC818900000	**246390190**
PEUGEOT					
Elyseo 50 45 Km/H	50	2002	2003	735112	**246390040**
Elyseo 50 50 Km/H	50	1998	2001	735112	**246390040**
Elystar 50 Advantage	50	2006	2009	735112	**246390040**
Jet Force 50 C-Tech	50	2005	2009	735112	**246390040**
Jet Force 50 C-Tech Rally Victories	50	2006	2007	735112	**246390040**
Jet Force 50 C-Tech Rcup	50	2007	2009	735112	**246390040**
Jet Force 50 Darkside	50	2008	2015	735112	**246390040**
Jet Force 50 Ice Blade	50	2010	2012	735112	**246390040**
Looxor 50	50	2002	2006	735112	**246390040**
Ludix 50 Elegance	50	2004	2007	735112	**246390040**
Ludix 50 Ep	50	2008	2011	735112	**246390040**
Ludix 50 Ii Dt One Luxe 2 Sitzer	50	2008	2011	735112	**246390040**
Ludix 50 Ii Elegance	50	2008	2011	735112	**246390040**
Ludix 50 Ii Lc Blaster Ice Blade	50	2010	2011	735112	**246390040**
Ludix 50 Ii Lc Blaster Rcup	50	2008	2009	735112	**246390040**
Ludix 50 Ii Lc Blaster Rs12	50	2008	2011	735112	**246390040**
Ludix 50 Ii One 1 Sitzer	50	2008	2011	735112	**246390040**
Ludix 50 Ii Snake Furious	50	2008	2011	735112	**246390040**
Ludix 50 Ii Snake Naked 10 Inch	50	2008	2011	735112	**246390040**
Ludix 50 Ii Trend 12 Inch	50	2008	2011	735112	**246390040**
Ludix 50 Ii Tt One 2 Sitzer	50	2008	2012	735112	**246390040**
Ludix 50 Lc Blaster 10 Zoll	50	2005	2007	735112	**246390040**
Ludix 50 Lc Rs Blaster 12 Zoll	50	2007	2007	735112	**246390040**
Ludix 50 Pro 2T	50	2008	2011	735112	**246390040**
Ludix 50 Snake	50	2004	2007	735112	**246390040**
Ludix 50 Trend 10 Inch	50	2004	2007	735112	**246390040**
Speedfight 1 50 Ac Dt	50	1997	2000	735112	**246390040**
Speedfight 1 50 Lc Dd	50	1999	1999	735112	**246390040**
Speedfight 1 50 Lc Dd	50	1999	2000	735112	**246390040**
Speedfight 1 50 Lc Dt	50	1997	1998	735112	**246390040**
Speedfight 2 50 Ac Dd Ultimate Edition	50	2008	2009	735112	**246390040**
Speedfight 2 50 Ac Dt	50	2001	2009	735112	**246390040**
Speedfight 2 50 Ac Dt Iron-X	50	2007	2007	735112	**246390040**
Speedfight 2 50 Ac Dt Motor Sport	50	2007	2007	735112	**246390040**
Speedfight 2 50 Ac Dt Rally Victories	50	2006	2007	735112	**246390040**
Speedfight 2 50 Ac Dt Rcup	50	2007	2009	735112	**246390040**
Speedfight 2 50 Ac Dt Silver Sport	50	2004	2007	735112	**246390040**
Speedfight 2 50 Ac Dt Wrc 307	50	2005	2005	735112	**246390040**
Speedfight 2 50 Lc Dd	50	2001	2009	735112	**246390040**



Modello *Model*	CC	Da *From*	A *To*	OEM	Codice RMS *RMS Code*
Speedfight 2 50 Lc Dd Furious	50	2003	2003	735112	**246390040**
Speedfight 2 50 Lc Dd Iron-X	50	2007	2007	735112	**246390040**
Speedfight 2 50 Lc Dd Motor Sport	50	2007	2007	735112	**246390040**
Speedfight 2 50 Lc Dd Rally Victories	50	2006	2007	735112	**246390040**
Speedfight 2 50 Lc Dd Rcup	50	2007	2009	735112	**246390040**
Speedfight 2 50 Lc Dd Silver Sport	50	2004	2007	735112	**246390040**
Speedfight 2 50 Lc Dd Ultimate Edition	50	2008	2009	735112	**246390040**
Speedfight 2 50 Lc Dd Wrc 206	50	2003	2004	735112	**246390040**
Speedfight 2 50 Lc Dd Wrc 307	50	2005	2005	735112	**246390040**
Speedfight 2 50 Lc Dd X-Race	50	2001	2003	735112	**246390040**
Speedfight 3 50 Ac Dt	50	2009	2011	735112	**246390040**
Speedfight 3 50 Ac Dt Rs	50	2010	2011	735112	**246390040**
Speedfight 3 50 Lc Dd	50	2009	2011	735112	**246390040**
Speedfight 3 50 Lc Dd Rs	50	2010	2011	735112	**246390040**
Tkr 50	50	2001	2009	735112	**246390040**
Tkr 50 Furious	50	2003	2011	735112	**246390040**
Tkr 50 Metal-X	50	2002	2003	735112	**246390040**
Tkr 50 Rally Victories	50	2006	2007	735112	**246390040**
Tkr 50 Rcup	50	2008	2009	735112	**246390040**
Tkr 50 Streetboard	50	2001	2001	735112	**246390040**
Tkr 50 Streetzone	50	2003	2003	735112	**246390040**
Tkr 50 Wrc 307	50	2005	2005	735112	**246390040**
Trekker 50 Off Road	50	1998	2000	735112	**246390040**
Trekker 50 Road	50	1998	2000	735112	**246390040**
Trekker 50 Streetboard	50	1999	2000	735112	**246390040**
Vivacity 50	50	1999	2004	735112	**246390040**
Vivacity 50 2	50	2005	2009	735112	**246390040**
Vivacity 50 2 Blueline	50	2005	2005	735112	**246390040**
Vivacity 50 2 Compact	50	2005	2007	735112	**246390040**
Vivacity 50 2 Motorsport	50	2007	2009	735112	**246390040**
Vivacity 50 2 Rs	50	2008	2008	735112	**246390040**
Vivacity 50 2 Silver Sport	50	2005	2007	735112	**246390040**
Vivacity 50 2 Sportline 4	50	2006	2009	735112	**246390040**
Vivacity 50 3 2T New	50	2008	2017	735112	**246390040**
Vivacity 50 Blueline	50	2004	2004	735112	**246390040**
Vivacity 50 Compact	50	2003	2004	735112	**246390040**
Vivacity 50 Silver Sport	50	2004	2004	735112	**246390040**
Vivacity 50 Sportline	50	2001	2001	735112	**246390040**
Vivacity 50 Sportline 2	50	2002	2002	735112	**246390040**
Vivacity 50 Sportline 3	50	2003	2003	735112	**246390040**
Elyseo 100	100	1998	2001	723726	**246390370**
Speedfight 1 100	100	1998	2000	723726	**246390370**
Speedfight 2 100	100	2001	2007	723726	**246390370**
Speedfight 2 100 Rally Victories	100	2006	2007	723726	**246390370**
Speedfight 2 100 Silver Sport	100	2004	2006	723726	**246390370**
Speedfight 2 100 Wrc 206	100	2004	2004	723726	**246390370**
Speedfight 2 100 Wrc 307	100	2005	2005	723726	**246390370**
Speedfight 2 100 X-Race	100	2002	2003	723726	**246390370**
Sv 100	100	1998	1998	723726	**246390370**
Trekker 100 Road	100	1998	2000	735112	**246390040**
Vivacity 100	100	1999	2007	723726	**246390370**
PIAGGIO					
Ape	50	2009	2017	179116	**246390071**
Ape FI - FI2	50	1989	1995	1791165	**246390071**
Ape FI3 Europa	50	1996	1999	1791165	**246390071**

Modello *Model*	CC	Da *From*	A *To*	OEM	Codice RMS *RMS Code*
Ape Mix 2T	50	1998	2008	179116	**246390071**
Ape Rst Mix	50	1999	2003	1791165	**246390071**
Ape Tm P	50	1985	1989	1791165	**246390071**
Diesis	50	2001	2001	82530R	**246390010**
Fly 2T	50	2005	2007	82530R	**246390010**
Fly 2T	50	2010	2011	82530R	**246390010**
Fly 4T	50	2005	2007	96921R	**246390080**
Fly 4T & 25-30 Km/H	50	2008	2011	96921R	**246390080**
Fly 4T 2V	50	2013	2015	96921R	**246390080**
Fly 4T 2V 25-30Km-H	50	2012	2014	96921R	**246390080**
Fly 4T 4V	50	2012	2013	96921R	**246390080**
Fly 4T Motore Chn	50	2006	2007	96921R	**246390080**
Free	50	1992	1994	82530R	**246390010**
Free Delivery	50	2000	2001	82530R	**246390010**
Free FI	50	1995	2002	82530R	**246390010**
Liberty	50	1997	2005	82530R	**246390010**
Liberty 2T	50	2006	2008	82530R	**246390010**
Liberty 2T Rst	50	2004	2004	82530R	**246390010**
Liberty 2T Sport	50	2006	2008	82530R	**246390010**
Liberty 4T	50	2000	2002	96921R	**246390080**
Liberty 4T	50	2005	2008	96921R	**246390080**
Liberty 4T Delivery - Single	50	2010	2014	96921R	**246390080**
Liberty 4T Delivery Tnt	50	2009	2009	96921R	**246390080**
Liberty 4T Ptt - Double - Nexive	50	2009	2015	96921R	**246390080**
Liberty 4T Ptt (Deu)	50	2007	2012	96921R	**246390080**
Liberty 4T Rst	50	2004	2004	96921R	**246390080**
Liberty 4T Sport	50	2006	2008	96921R	**246390080**
Liberty Moc 2T & Elle	50	2009	2013	82530R	**246390010**
Liberty Moc 4T & Elle	50	2009	2016	96921R	**246390080**
Liberty Ptt Eu2	50	2004	2005	82530R	**246390010**
Nrg	50	1994	1996	82530R	**246390010**
Nrg Extreme	50	1999	2000	82530R	**246390010**
Nrg Mc3	50	2001	2004	82530R	**246390010**
Nrg Power Dd	50	2005	2015	82530R	**246390010**
Nrg Power Dd Serie Speciale	50	2007	2012	82530R	**246390010**
Nrg Power Dt	50	2006	2015	82530R	**246390010**
Nrg Power Dt Serie Speciale	50	2007	2008	82530R	**246390010**
Nrg Power Purejet	50	2004	2011	96921R	**246390080**
Nrg Purejet	50	2002	2004	96921R	**246390080**
Nrg Purejet	50	2010	2010	96921R	**246390080**
Nrg Rst Mc2	50	1996	1998	82530R	**246390010**
Ntt	50	1995	1996	82530R	**246390010**
Puch P1-Tre	50	1993	1998	96921R	**246390080**
Quartz	50	1992	1996	82530R	**246390010**
Sfera	50	1991	1993	82530R	**246390010**
Sfera Maquillage 2	50	1994	1994	82530R	**246390010**
Sfera Rst	50	1995	1997	82530R	**246390010**
Typhoon	50	2001	2011	82530R	**246390010**
Typhoon 2T Euro2	50	2010	2016	82530R	**246390010**
Typhoon 2T Euro3 Ch	50	2011	2011	82530R	**246390010**
Vespa Et2	50	1997	2005	82530R	**246390010**
Vespa Et2 Iniezione	50	1997	2000	82530R	**246390010**
Vespa Et4	50	2000	2005	96921R	**246390080**
Vespa FI	50	1990	1990	1791165	**246390071**
Vespa FI2 Automatica	50	1990	1991	1791165	**246390071**
Vespa FI2 Hp	50	1991	1997	1791165	**246390071**
Vespa Lx 2T	50	2005	2013	82530R	**246390010**
Vespa Lx 2T Touring & 30Km	50	2010	2013	82530R	**246390010**



MOTORINI D'AVVIAMENTO

STARTER MOTORS

Modello *Model*	CC	Da *From*	A *To*	OEM	Codice RMS *RMS Code*
Vespa Lx 4T	50	2005	2009	96921R	**246390080**
Vespa Lx 4T-4V	50	2009	2013	96921R	**246390080**
Vespa Lx 4T-4V Touring	50	2010	2013	96921R	**246390080**
Vespa Lxv 2T	50	2006	2009	82530R	**246390010**
Vespa Lxv 2T Navy	50	2008	2008	82530R	**246390010**
Vespa N	50	1989	1990	1791165	**246390071**
Vespa Pk	50	1982	1984	1791165	**246390071**
Vespa Pk Automatica	50	1984	1989	1791165	**246390071**
Vespa Pk Xl	50	1985	1988	1791165	**246390071**
Vespa Pk Xl Plurimatic	50	1985	1990	1791165	**246390071**
Vespa Pk Xl Rush	50	1988	1989	1791165	**246390071**
Vespa Primavera 2T	50	2013	2017	82530R	**246390010**
Vespa Primavera 4T 2V 25 Km/H	50	2014	2016	96921R	**246390080**
Vespa Primavera 4T-4V	50	2013	2016	96921R	**246390080**
Vespa S 2T & College	50	2007	2012	82530R	**246390010**
Vespa S 4T-4V & College	50	2008	2012	96921R	**246390080**
Vespa Sprint 2T 2V	50	2014	2016	82530R	**246390010**
Vespa Sprint 4T 2V 25 Km/H	50	2014	2016	96921R	**246390080**
Vespa Sprint 4T 4V	50	2014	2016	96921R	**246390080**
Zip	50	1992	1993	82530R	**246390010**
Zip	50	1995	1996	82530R	**246390010**
Zip	50	2000	2004	82530R	**246390010**
Zip 2T	50	2008	2013	82530R	**246390010**
Zip 4T	50	2000	2013	96921R	**246390080**
Zip 4T 25Km-H	50	2006	2016	96921R	**246390080**
Zip Bimodale	50	1994	1997	82530R	**246390010**
Zip Fast Raider	50	1993	1994	82530R	**246390010**
Zip Fast Raider Rst	50	1996	1997	82530R	**246390010**
Zip Rst	50	1996	1999	82530R	**246390010**
Zip Rst	50	1996	1999	96921R	**246390080**
Zip Sp	50	1996	2004	82530R	**246390010**
Zip Sp Euro2	50	2006	2013	82530R	**246390010**
Skr City	80	1999	1999	96921R	**246390080**
Diesis	100	2001	2001	ODN00G03905891	**246390080**
Beverly	125	2001	2003	82611R	**246390090**
Beverly Euro 3	125	2007	2008	82611R	**246390090**
Beverly Euro 3 Mic	125	2007	2007	82611R	**246390090**
Beverly Euro 3 Sport	125	2007	2008	82611R	**246390090**
Beverly Rst	125	2004	2005	82611R	**246390090**
Beverly Rst	125	2005	2007	82611R	**246390090**
Beverly Tourer Euro3	125	2007	2010	82611R	**246390090**
Carnaby	125	2007	2010	82611R	**246390090**
Cosa Cl-Clx	125	1988	1991	249235	**246390261**
Fly	125	2005	2007	82611R	**246390090**
Fly 4T 3V Ie E3 Dt	125	2013	2015	58294R	**246390400**
Fly 4T 3V Ie Euro3 Lem	125	2012	2013	58294R	**246390400**
Fly Euro3	125	2007	2011	82611R	**246390090**
Hexagon	125	1994	1997	289094	**246390110**
Hexagon Gtx	125	2000	2000	82611R	**246390090**
Hexagon Lx4	125	1998	1999	2947365	**246390100**
Hexagon Lx-Lxt	125	1998	1999	289094	**246390110**
Liberty	125	1998	2000	2947365	**246390100**
Liberty	125	2001	2002	82611R	**246390090**
Liberty 4T	125	2006	2007	82611R	**246390090**
Liberty 4T 2V Euro3	125	2009	2012	82611R	**246390090**
Liberty 4T 2V Ie Ptt - Ita	125	2012	2013	82611R	**246390090**
Liberty 4T 3V Ie E3	125	2013	2014	58294R	**246390400**

Modello *Model*	CC	Da *From*	A *To*	OEM	Codice RMS *RMS Code*
Liberty 4T Euro3	125	2006	2008	82611R	**246390090**
Liberty 4T Euro3 Delivery - Single	125	2007	2015	82611R	**246390090**
Liberty 4T Euro3 Delivery - Tnt - Nexive	125	2008	2015	82611R	**246390090**
Liberty 4T Iget Corporate E4	125	2017	2019	1A009964R	**246390400**
Liberty 4T Sport Euro3	125	2006	2008	82611R	**246390090**
Liberty Iget 4T 3V Ie	125	2015	2019	1D001434	**246390400**
Liberty Rst	125	2004	2005	82611R	**246390090**
Liberty Rst Ptt	125	2005	2011	82611R	**246390090**
Liberty Sport	125	2006	2006	82611R	**246390090**
Mp3	125	2006	2008	82611R	**246390090**
Mp3 Ibrido	125	2009	2010	58294R	**246390400**
Mp3 Ie	125	2008	2009	58294R	**246390400**
Mp3 Ie Touring	125	2011	2012	58173R	**246390400**
Sfera	125	1995	1997	2947365	**246390100**
Skipper	125	1994	1997	2931924	**246390110**
Skipper 4T	125	2000	2002	82611R	**246390090**
Skipper Lx	125	1998	1999	289094	**246390110**
Super Hexagon Gtx 12	125	2001	2002	82611R	**246390090**
Typhoon 4T 2V Euro3	125	2010	2011	82611R	**246390090**
Vespa 946 4T 3V Abs	125	2013	2015	58294R	**246390400**
Vespa 946 4T 3V Abs Armani	125	2015	2015	58294R	**246390400**
Vespa Et4	125	1996	1998	430554	**246390100**
Vespa Et4	125	1999	2002	82611R	**246390090**
Vespa Fl	125	1989	1990	1791165	**246390071**
Vespa Granturismo	125	2003	2007	82611R	**246390090**
Vespa Granturismo Euro 3	125	2006	2007	82611R	**246390090**
Vespa Gts 4T Ie Super	125	2009	2016	58142R5	**246390220**
Vespa Gts Euro3	125	2007	2012	82611R	**246390090**
Vespa Gtv	125	2006	2008	82611R	**246390090**
Vespa Gtv 4T Navy Euro3	125	2008	2008	82611R	**246390090**
Vespa Lx	125	2005	2006	82611R	**246390090**
Vespa Lx 4T 3V Ie - Touring	125	2012	2013	58173R	**246390400**
Vespa Lx 4T Euro3 Touring	125	2010	2011	82611R	**246390090**
Vespa Lx 4T Fl	125	2009	2009	82611R	**246390090**
Vespa Lx Euro 3	125	2006	2008	82611R	**246390090**
Vespa Lx Euro 3 Ie	125	2009	2011	82611R	**246390090**
Vespa Lx Primavera 4T 3V Ie	125	2013	2016	58294R	**246390400**
Vespa Lxv 4T Euro3	125	2006	2009	82611R	**246390090**
Vespa Lxv 4T Navy Euro3	125	2007	2008	82611R	**246390090**
Vespa Lxv Ie 4T	125	2010	2013	82611R	**246390090**
Vespa Primavera 4T 3V E4 Iget Abs	125	2016	2019	1A009964R	**246390400**
Vespa Px	125	1998	2001	249235	**246390261**
Vespa Px	125	2011	2016	249235	**246390261**
Vespa Px 30 Anni	125	2007	2008	249235	**246390261**
Vespa Px Euro 2	125	2001	2007	249235	**246390261**
Vespa Pxe Arcobaleno	125	1981	1997	249235	**246390261**
Vespa S 4T 3V Ie	125	2012	2012	58294R	**246390400**
Vespa S 4T Euro 3	125	2007	2008	82611R	**246390090**
Vespa S 4T Ie & College	125	2009	2011	82611R	**246390090**
Vespa Sprint 4T 3V Ie	125	2014	2015	58294R	**246390400**
Vespa Sprint 4T 3V Ie	125	2015	2015	58294R	**246390400**
Vespa Sprint Iget 4T 3V Abs	125	2016	2017	58294R	**246390400**
Vespa Sprint Iget 4T 3V Abs (Emea)	125	2016	2019	1A009964R	**246390400**
X Evo	125	2007	2011	82699R	**246390230**
X Evo	125	2007	2016	82611R	**246390090**



Modello *Model*	CC	Da *From*	A *To*	OEM	Codice RMS *RMS Code*
X7 Euro 3	125	2008	2008	82611R	**246390090**
X7 Evo Ie Euro 3	125	2009	2010	58142R5	**246390220**
X8	125	2004	2006	82611R	**246390090**
X8 Premium Euro 2	125	2006	2006	82611R	**246390090**
X8 Premium Euro 3	125	2006	2007	82611R	**246390090**
X8 Street Euro 2	125	2006	2007	82611R	**246390090**
X9	125	2001	2002	82611R	**246390090**
X9 Evolution	125	2003	2003	82611R	**246390090**
X9 Evolution	125	2005	2006	82611R	**246390090**
X9 Evolution Euro3	125	2007	2007	82611R	**246390090**
Zip	125	2000	2002	82611R	**246390090**
Fly	150	2005	2007	82611R	**246390090**
Fly Euro3	150	2008	2011	82611R	**246390090**
Liberty 4T 3V Lem	150	2013	2014	58294R	**246390400**
Liberty 4T Euro3	150	2008	2008	82611R	**246390090**
Liberty 4T Sport Euro3	150	2008	2008	82611R	**246390090**
Liberty Iget 4T 3V Ie	150	2015	2019	1D001434	**246390400**
Liberty Moc 4T Euro3	150	2009	2013	82611R	**246390090**
Vespa Lt 4T 3V Ie	150	2014	2014	58294R	**246390400**
Vespa Lx	150	2005	2006	82611R	**246390090**
Vespa Lx 4T 3V Ie - Touring	150	2012	2013	58173R	**246390400**
Vespa Lx 4T Fl	150	2009	2009	82611R	**246390090**
Vespa Lx Euro 3	150	2006	2008	82611R	**246390090**
Vespa Lx Euro 3 Ie	150	2009	2011	82611R	**246390090**
Vespa Lx Touring	150	2010	2012	82611R	**246390090**
Vespa Primavera 4T-3V	150	2013	2016	58294R	**246390400**
Vespa Px	150	2011	2017	249235	**246390261**
Vespa S 4T	150	2008	2009	82611R	**246390090**
Vespa S 4T Ie & College	150	2009	2012	82611R	**246390090**
Vespa Sprint 4T 3V Ie	150	2015	2015	58294R	**246390400**
Vespa Sprint Iget 4T 3V Abs (Emea)	150	2016	2019	1A009964R	**246390400**
Vespa Sprint Sport 4T 3V Iget Abs	150	2016	2019	1A009964R	**246390400**
X8 Street Euro 2	150	2006	2008	82611R	**246390090**
X9 Amalfi	180	2000	2003	82611R	**246390090**
Carnaby	200	2007	2008	82611R	**246390090**
Liberty	200	2006	2006	82611R	**246390090**
Liberty 4T Euro3	200	2006	2008	82611R	**246390090**
Liberty 4T Sport Euro3	200	2006	2007	82611R	**246390090**
Liberty Rst	200	2004	2004	82611R	**246390090**
Liberty Sport	200	2006	2006	82611R	**246390090**
Vespa Granturismo	200	2006	2007	82611R	**246390090**
X8	200	2005	2007	82611R	**246390090**
X9	200	2002	2003	82611R	**246390090**
X9 Evolution	200	2003	2003	82611R	**246390090**
Beverly	250	2006	2007	58142R5	**246390220**
Beverly Cruiser	250	2007	2009	58142R5	**246390220**
Beverly Euro 3 Mic	250	2007	2007	58142R5	**246390220**
Beverly Ie Euro 3	250	2006	2008	58142R5	**246390220**
Beverly Rst	250	2004	2005	58142R5	**246390220**
Beverly Sport	250	2006	2008	58142R5	**246390220**
Beverly Tourer Euro3	250	2007	2009	58142R5	**246390220**
Carnaby	250	2007	2008	82611R	**246390090**
Carnaby	250	2008	2009	58142R5	**246390220**
Hexagon Gt-Gtx	250	1998	2000	495180	**246390240**
Mp3	250	2006	2008	58142R5	**246390220**
Mp3 Lt	250	2008	2009	58142R5	**246390220**
Mp3 Mic	250	2008	2009	58142R5	**246390220**

Modello *Model*	CC	Da *From*	A *To*	OEM	Codice RMS *RMS Code*
Vespa Gt 60 Euro 3	250	2006	2007	58142R5	**246390220**
Vespa Gts	250	2005	2016	58142R5	**246390220**
Vespa Gts Abs	250	2005	2012	58142R5	**246390220**
Vespa Gtv	250	2006	2009	58142R5	**246390220**
Vespa Gtv 4T Navy Euro3	250	2007	2007	58142R5	**246390220**
X Evo	250	2007	2013	58142R5	**246390220**
X7 Euro 3	250	2008	2008	58142R5	**246390220**
X8 Euro3	250	2005	2008	58142R5	**246390220**
X9 Evolution	250	2004	2004	58142R5	**246390220**
X9 Evolution	250	2006	2006	58142R5	**246390220**
Beverly Ie Abs E4	300	2014	2016	58142R5	**246390220**
Beverly Ie Abs E4 (Emea)	300	2016	2019	1A009964R	**246390400**
Beverly Rst 4T 4V Ie Euro3	300	2010	2015	58142R5	**246390220**
Beverly Tourer Euro3	300	2009	2010	58142R5	**246390220**
Carnaby Cruiser	300	2009	2012	58142R5	**246390220**
Mp3 300 Ie Lt	300	2010	2011	58173R	**246390400**
Mp3 300 Ie Mic	300	2010	2011	58173R	**246390400**
Mp3 4T 4V Ie Erl Ibrido	300	2010	2013	58173R	**246390400**
Mp3 4T 4V Ie Lt Ibrido	300	2010	2011	58173R	**246390400**
Mp3 Ie Lt- Ie Lt Sport	300	2011	2014	58173R	**246390400**
Mp3 Ie Lt Touring	300	2011	2013	58173R	**246390400**
Mp3 Ie Touring	300	2011	2012	58173R	**246390400**
Vespa Gts Ie & Touring	300	2012	2016	58142R5	**246390220**
Vespa Gts Ie Abs E4	300	2016	2017	58142R5	**246390220**
Vespa Gts Ie Touring	300	2011	2012	58142R5	**246390220**
Vespa Gts Super	300	2008	2016	58142R5	**246390220**
Vespa Gts Super Sport	300	2010	2013	58142R5	**246390220**
Vespa Gts-Super Ie Abs E4 (Emea)	300	2016	2018	58142R5	**246390220**
Vespa Gtv 4T 4V Ie	300	2010	2013	58142R5	**246390220**
Vespa Gtv Via Montenapoleone	300	2010	2010	58142R5	**246390220**
X7 Evo Ie Euro 3	300	2009	2010	58142R5	**246390220**
Beverly Euro 3	400	2006	2007	82699R	**246390230**
Beverly Tourer Euro3	400	2008	2010	82699R	**246390230**
Mp3	400	2007	2008	82699R	**246390230**
Mp3 Ie Lt - Mp3 Ie Lt Sport	400	2008	2010	82699R	**246390230**
Mp3 Ie Lt Touring	400	2011	2011	82699R	**246390230**
Mp3 Mic	400	2008	2010	82699R	**246390230**
Mp3 Rl Touring	400	2011	2011	82699R	**246390230**
X Evo	400	2007	2011	82699R	**246390230**
X8 Euro3	400	2006	2008	82699R	**246390230**
Beverly	500	2002	2006	82699R	**246390230**
Beverly Cruiser	500	2007	2012	82699R	**246390230**
Beverly Euro 3	500	2006	2008	82699R	**246390230**
Mp3 Lt Business Abs	500	2014	2016	82699R	**246390230**
Mp3 Lt E4 Sport - Business	500	2016	2016	82699R	**246390230**
Mp3 Lt Sport - Business	500	2011	2013	82699R	**246390230**
Mp3 Rl Sport - Business	500	2011	2012	82699R	**246390230**
Mp3 Sport Abs	500	2014	2016	82699R	**246390230**
X10 4T 4V Ie Euro3	500	2012	2014	82699R	**246390230**
X9	500	2001	2002	96921R	**246390080**
X9	500	2001	2002	82699R	**246390230**
X9 Evolution	500	2003	2005	96921R	**246390080**
X9 Evolution	500	2003	2005	82699R	**246390230**
X9 Evolution	500	2006	2007	96921R	**246390080**
X9 Evolution	500	2006	2007	82699R	**246390230**
X9 Evolution Abs	500	2006	2007	286808	**246390080**
X9 Evolution Abs	500	2006	2007	82699R	**246390230**



MOTORINI D'AVVIAMENTO

STARTER MOTORS

Modello *Model*	CC	Da *From*	A *To*	OEM	Codice RMS *RMS Code*
SUZUKI					
Aj Zz Sepia S	50	1995	1997	31100-36C02-000	**246390160**
Ay50Ayw Katana V-Y	50	1997	2000	31100-36C02-00N	**246390160**
Tr S Street Magic	50	1998	1998	31100-36C02-000	**246390160**
Ux Zillion	50	1999	1999	31100-36C02-00N	**246390160**
Uc Epicuro X-K1	125	1999	2001	31100-14F01-000	**246390280**
Uh125 Burgman K2-K6	125	2002	2006	31100-14F01-000	**246390280**
Uc Epicuro X-K1	150	1999	2001	31100-14F01-000	**246390280**
Uh200 Burgman K2-K6	150	2002	2006	31100-14F01-000	**246390280**
An250 Burgman K3-K6	250	2003	2006	31100-14F01-000	**246390280**
An250 Burgman W-K2	250	1998	2002	31100-14F01-000	**246390280**
An400 Burgman K3-K6	400	2003	2006	31100-14F01-000	**246390280**
An400 Burgman K7-L0	400	2007	2010	31100-06H00-000	**246390280**
An400 Burgman L1	400	2011	2011	31100-06H00-000	**246390280**
An400 Burgman L2	400	2012	2012	31100-06H01-000	**246390280**
An400 Burgman L3	400	2013	2013	31100-06H01-000	**246390280**
An400 Burgman L4	400	2014	2014	31100-06H01-000	**246390280**
An400 Burgman L5	400	2015	2015	31100-06H01-000	**246390280**
An400 Burgman L6	400	2016	2016	31100-06H01-000	**246390280**
An400 Burgman L8	400	2018	2018	31100-06H01-000	**246390280**
An400 Burgman X-K2	400	1999	2002	31100-14F01-000	**246390280**
SYM					
Jet	50	1999	1999	31200GAK900	**246390120**
Jungle	50	1999	1999	31200GAK900	**246390120**
Mask	50	2000	2001	31200GAK900	**246390120**
Mask Eu2	50	2003	2004	31200GAK900	**246390120**
Red Devil	50	1999	1999	31200GAK900	**246390120**
Super Fancy	50	1998	2000	31200GAK900	**246390120**
Euro Mx	125	2002	2002	31200M92100	**246390180**
Euro Mx E2	125	2003	2004	31200M92100	**246390180**
Gts Joymax	125	2006	2007	31200H9A000	**246390350**
Hd Eu2	125	2003	2004	31200HLA000	**246390360**
Hd Euro3	125	2007	2008	31200H9A000	**246390350**
Hd Evo	125	2005	2006	31200H9A000	**246390350**
Hd Evo Euro3	125	2007	2008	31200H9A000	**246390350**
Hd Evo Euro3	125	2010	2011	31200H9A000	**246390350**
Hd Evo Tamburo Euro3	125	2008	2009	31200H9A000	**246390350**
Hd2	125	2011	2011	31200H9A000	**246390350**
Hd2	125	2014	2014	31200H9A000	**246390350**
Jet 14 125I Euro4	125	2017	2017	31200ARA000	**246390180**
Jet14 125 Lc Euro4	125	2018	2018	31200ARA000	**246390180**
Joyride	125	2001	2002	31200H9A000	**246390350**
Joyride Euro2	125	2005	2006	31200H9A000	**246390350**
Joyride Euro3	125	2007	2007	31200H9A000	**246390350**
Joyride Evo	125	2009	2010	31200H9A000	**246390350**
Joyride Evo	125	2010	2010	31200H9A000	**246390350**
Joyride Evo	125	2013	2014	31200H9A000	**246390350**
Shark	125	1999	2002	31200M92100	**246390180**
Symphony	125	2009	2009	31200ARA000	**246390180**
Symphony Cargo 125 Cbs Euro4	125	2017	2017	31200ARA000	**246390180**
Symphony S	125	2009	2014	31200ARA000	**246390180**
Symphony S Euro4	125	2016	2016	31200ARA000	**246390180**
Symphony Sr	125	2010	2010	31200ARA000	**246390180**
Symphony Sr	125	2012	2014	31200ARA000	**246390180**
Symphony St	125	2015	2015	31200ARA000	**246390180**
Symphony St 125I Cbs Euro4	125	2018	2018	31200ARA000	**246390180**
Symphony St 125I Lc Abs Euro4	125	2018	2018	31200ARA000	**246390180**
Symphony St Euro4	125	2016	2016	31200ARA000	**246390180**

Modello *Model*	CC	Da *From*	A *To*	OEM	Codice RMS *RMS Code*
Euro Mx	150	2002	2002	31200M92100	**246390180**
Euro Mx Eu2	150	2003	2004	31200M92100	**246390180**
Joyride	150	2001	2002	31200H9A000	**246390350**
Shark	150	2000	2001	31200M92100	**246390180**
Symphony S	150	2009	2014	31200ARA000	**246390180**
Symphony Sr	150	2010	2010	31200ARA000	**246390180**
Symphony Sr	150	2012	2014	31200ARA000	**246390180**
Track Runner	180	2006	2007	31200HLA000	**246390360**
Hd Eu2	200	2003	2004	31200HLA000	**246390360**
Hd Euro3 I	200	2007	2007	31200HLA000	**246390360**
Hd Evo Euro2	200	2005	2006	31200HLA000	**246390360**
Hd Evo Euro3 I	200	2007	2007	31200HLA000	**246390360**
Hd Evo I Euro3	200	2010	2012	31200HLA000	**246390360**
Hd Evo I Tamburo Euro3	200	2008	2009	31200HLA000	**246390360**
Hd2 I	200	2011	2011	31200HLA000	**246390360**
Hd2 I	200	2014	2014	31200HLA000	**246390360**
Jet14 200 Euro4	200	2018	2018	31200ARA000	**246390180**
Joyride	200	2003	2003	31200HLA000	**246390360**
Joyride Eu2	200	2003	2004	31200HLA000	**246390360**
Joyride Euro2	200	2005	2006	31200HLA000	**246390360**
Joyride Evo I	200	2009	2009	31200HLA000	**246390360**
Joyride Evo I	200	2013	2014	31200HLA000	**246390360**
Joyride I Euro3	200	2007	2009	31200HLA000	**246390360**
Joyride I Evo	200	2010	2010	31200HLA000	**246390360**
Symphony St	200	2015	2015	31200ARA000	**246390180**
Symphony St 200 Euro4	200	2017	2017	31200ARA000	**246390180**
Symphony St 200I Abs Euro4	200	2018	2018	31200ARA000	**246390180**
YAMAHA					
Yh Why	50	2001	2002	4CUH18001000	**246390020**
Yq Aerox	50	2007	2012	4CUH18001000	**246390020**
Hw Xenter	125	2012	2016	52SH18000000	**246390390**
Vp X-City	125	2008	2011	1B9H18000100	**246390340**
Xc125R Majesty S	125	2014	2014	52SH18000000	**246390390**
Xq Maxster	125	2001	2002	5DSH18000000	**246390150**
Yp125 Majesty	125	2001	2002	5DSH18000000	**246390150**
Yp125E Majesty	125	2003	2006	5DSH18000000	**246390150**
Yp125R X-Max	125	2006	2012	1B9H18000000	**246390340**
Yp125R X-Max	125	2012	2016	1B9H18000100	**246390340**
Yp125R X-Max Abs	125	2011	2011	1B9H18000100	**246390340**
Yp125Ra X-Max Abs	125	2013	2017	1B9H18000100	**246390340**
Hw Xenter	150	2012	2016	52SH18000000	**246390390**
Xn Teo'S	150	2001	2002	5DSH18000000	**246390150**
Xq Maxster	150	2001	2002	5DSH18000000	**246390150**
Yp150 Majesty	150	2001	2002	5DSH18000000	**246390150**
Yp180E Majesty	180	2003	2006	5DSH18000000	**246390150**
Yp400R X-Max	400	2013	2016	1SDH18000000	**246390190**
Yp400R X-Max Momodesign	400	2014	2014	1SDH18000000	**246390190**
Yp400Ra X-Max Abs	400	2014	2017	1SDH18000000	**246390190**
Yp400Ra X-Max Ironmax Abs	400	2016	2016	1SDH18000000	**246390190**
Yp400Ra X-Max Momodesign Abs	400	2014	2014	1SDH18000000	**246390190**



246390010

APRILIA - DERBI - GILERA - PIAGGIO: R.O. 82530R
KYMCO: R.O. 00104002



246390020

APRILIA: R.O. AP8206459
BENELLI: R.O. R19240011A0
MALAGUTI: R.O. 02404400
MBK - YAMAHA: R.O. 4CUH18001000



246390040

PEUGEOT: R.O. 735112



246390071

PIAGGIO: R.O. 1791165



246390080

APRILIA - DERBI - GILERA - PIAGGIO
R.O. 96921R



246390090

APRILIA - GILERA - PIAGGIO
R.O. 82611R



246390100

APRILIA: R.O. AP8550442
PIAGGIO: R.O. 2947365



246390110

APRILIA - DERBI: R.O. AP8551026 • AP8550078
GILERA - PIAGGIO: R.O. 289094



246390120

KYMCO: R.O. 00104202
SYM: R.O. 31200GAK900





MOTORINI D'AVVIAMENTO

STARTER MOTORS

246390130

KYMCO: R.O. 00107242



246390140

KYMCO: R.O. 00128741 • 31200-KUDU-9000



246390150

BENELLI: R.O. R19010111A0
ITALJET: R.O. 4874800179
MALAGUTI: R.O. 74800300
MBK - YAMAHA: R.O. 5DSH18000000



246390160

APRILIA: R.O. AP2QCA000041
BENELLI: R.O. R013434100000
DERBI: R.O. 00G03901891 • 00G03904891
ITALJET: R.O. 337200050
MALAGUTI: R.O. 62211800
SUZUKI: R.O. 31100-36C02-000



246390170

APRILIA: R.O. AP8510653



246390180

SYM: R.O. 31200M92100 • 31200ARA000



246390190

APRILIA: R.O. AP8122628
BENELLI: R.O. R13040191A0
MALAGUTI: R.O. 74800500
MBK: R.O. 4HC818900000
YAMAHA: R.O. 1SDH18000000



246390200

HONDA: R.O. 31200-KAB-018



246390210

APRILIA: R.O. AP0295625





246390220

APRILIA - DERBI - GILERA - PIAGGIO
R.O. 58142R • 58142R5



246390230

APRILIA - PIAGGIO: R.O. 82699R



246390240

HONDA
PIAGGIO: R.O. 495180



246390250

KYMCO: R.O. 00128751



246390252

Di primo equipaggiamento | *OEM Quality*
KYMCO: R.O. 00128751



246390261

PIAGGIO: R.O. 249235



246390271

KYMCO: R.O. 00128750 • 31210-KHE7-9000-M1



246390280

SUZUKI: R.O. 31100-14F01-000



246390291

KYMCO: R.O. 00131063 • 31210-LEB1-90A



246390300

HONDA: R.O. 31200-KGF-901



246390322

KYMCO: R.O. 00131056



246390340

YAMAHA: R.O. 1B9H18000100





MOTORINI D'AVVIAMENTO

STARTER MOTORS

246390350

SYM: R.O. 31200H9A000



246390360

SYM: R.O. 31200HLA000



246390370

PEUGEOT: R.O. 723726



246390382

KYMCO: R.O. 00131156



246390390

YAMAHA: R.O. 52SH18000000



246390400

PIAGGIO: R.O. 58294R • 58173R



246390430

HONDA: R.O. 31200-KTW-901



246390450 NEW

LML: R.O. C-3727628





246350030

ANELLO PORTASPAZZOLE | *BRUSH HOLDER*

PIAGGIO 50: Vespa PK • Ape
R.O. 179755-291383



246350130

ANELLO PORTASPAZZOLE | *BRUSH HOLDER*

HONDA 125-150: SH • @ • Dylan • Phanteon 4T • Psi



246350270

ANELLO PORTASPAZZOLE | *BRUSH HOLDER*

YAMAHA 500: T-Max 01-07
R.O. 3HE818400000



246350341

ANELLO PORTASPAZZOLE | *BRUSH HOLDER*

YAMAHA 250: Majesty 96-03 • X-Max 05-09 • X-City 07-12
YAMAHA 300: XC Versity 03-06
YAMAHA 400: Majesty 04-11
R.O. 3KS818400000



246390410

SPAZZOLE | *BRUSH*

HONDA 150: SH i 07>



246390420

SPAZZOLE | *BRUSH*

HONDA 300: SH i 08>



246390440

SPAZZOLE | *BRUSH*

PIAGGIO 220: Ape Car P2-P3 78-85 • Ape MP P501-P601 78-96 • Ape TM P602 82-83 • Ape TM P703 FL2 99-07 • Ape TM P703-P703V 84-05
R.O. 159922





STATORI

STATORS

Modello *Model*	CC	Da *From*	A *To*	OEM	Codice RMS *RMS Code*	Note *Notes*
APRILIA						
Mojito Custom 2T Motore Piaggio	50	2004	2010	584525	**246350072**	
Rs	50	2006	2010	847065	**246350052**	
Rs4	50	2011	2013	82852R	**246350052**	
Rs4 Replica	50	2014	2016	82852R	**246350052**	
Scarabeo 4T	50	2002	2006	AP8551076	**246350062**	
Scarabeo 4T 4V	50	2010	2014	833632	**246350082**	
Scarabeo 4T 4V Net	50	2009	2010	833632	**246350082**	
Scarabeo 4T Restyling Eu3	50	2006	2009	969228	**246350062**	
Scarabeo Quattro	50	2009	2009	833632	**246350082**	
Sport City One 4T	50	2008	2010	969228	**246350062**	
Sr Iniezione E Carburatore	50	2014	2014	584525	**246350072**	
Sr Motard 4T 4V	50	2013	2014	833632	**246350082**	
Sr R	50	2004	2009	584525	**246350072**	
Sr R Factory Ie E Carburatore	50	2010	2014	584525	**246350072**	
Scarabeo 4T	100	2001	2005	AP8551076	**246350062**	
Scarabeo 4T	100	2010	2014	969228	**246350062**	
Scarabeo 4T Net	100	2009	2009	969228	**246350062**	
Scarabeo 4T Net Eu3	100	2010	2010	969228	**246350062**	
Scarabeo 4T Restyling	100	2006	2009	969228	**246350062**	
Atlantic	125	2003	2005	AP8577045	**246350092**	
Atlantic Eu3 125-250	125	2006	2008	AP8176335	**246350102**	
Mojito	125	2008	2008	584690	**246350142**	
Scarabeo	125	2004	2006	AP8577045	**246350092**	
Sport City Euro3	125	2006	2008	AP8176335	**246350102**	
Sport City One 4T Euro3	125	2008	2011	584690	**246350142**	
Sr Max	125	2011	2014	638848	**246350102**	
Sr Motard	125	2012	2014	584690	**246350142**	
Atlantic Eu3 125-250	250	2006	2008	AP8176335	**246350102**	
Scarabeo Light	250	2006	2008	AP8176335	**246350102**	
Sport City Cube	250	2008	2012	638848	**246350102**	
Scarabeo Light	300	2009	2010	638848	**246350102**	
Atlantic Sprint 400-500	400	2005	2008	AP8560100	**246350112**	
Scarabeo Light 400-500	400	2006	2008	58108R	**246350122**	
Atlantic	500	2001	2004	AP8560100	**246350112**	
Scarabeo	500	2003	2006	AP8560100	**246350112**	
DERBI						
Atlantis 2T	50	2010	2010	639865	**246350072**	
Atlantis 2T Eu2	50	2007	2009	639865	**246350072**	
Atlantis 4T Eu2	50	2007	2007	969228	**246350062**	
Atlantis O2	50	2002	2002	827849	**246350072**	
Atlantis O2 Bullet	50	2003	2005	830296	**246350072**	
Atlantis O2 City	50	2003	2006	830296	**246350072**	
Atlantis O2 Red Bullet	50	2003	2003	830296	**246350072**	
Atlantis O2 Two Chic	50	2005	2005	830296	**246350072**	
Boulevard 2T	50	2009	2014	639865	**246350072**	
Boulevard 4T Eu2 25 Km/H	50	2009	2009	969228	**246350062**	
Gp1	50	2001	2003	830296	**246350072**	
Gp1 E2	50	2003	2003	830296	**246350072**	
Gp1 Euro2	50	2005	2005	830296	**246350072**	
Gp1 Open Eu2	50	2006	2009	639865	**246350072**	
Gp1 Race Eu2	50	2005	2007	830296	**246350072**	
Gpr 2T	50	2013	2013	82852R	**246350052**	
Gpr 2T Eu2	50	2009	2010	82852R	**246350052**	
Gpr Nude & Gpr Nude Tuning	50	2006	2008	82852R	**246350052**	
Gpr Nude Sport	50	2006	2006	847065	**246350052**	
Gpr R Eu2 - Gpr Replica Eu2	50	2008	2008	82852R	**246350052**	
Gpr Racing Eu2	50	2006	2006	847065	**246350052**	
Gpr Replica & Gpr R Eu2	50	2006	2006	847065	**246350052**	



Modello *Model*	CC	Da *From*	A *To*	OEM	Codice RMS *RMS Code*	Note *Notes*
Gpr Replica 2T Malossi	50	2007	2007	82852R	**246350052**	
Gpr Replica Pesek Eu2	50	2007	2007	82852R	**246350052**	
Senda Hyp Drd Evo Limited Edition Eu2	50	2008	2008	82852R	**246350052**	
Senda R Drd Pro Eu2	50	2005	2011	82852R	**246350052**	
Senda Sm Drd Pro Eu2	50	2005	2011	82852R	**246350052**	
Senda Sm Drd Pro Eu2 2Ver	50	2005	2008	82852R	**246350052**	
Sonar 2T	50	2009	2009	639865	**246350072**	
Variant Sport 2T	50	2012	2012	639865	**246350072**	
Atlantis 50-100 4T	100	2004	2006	969228	**246350062**	
Boulevard 4T	100	2010	2011	969228	**246350062**	
Boulevard 125-150	125	2002	2004	828135	**246350142**	
Boulevard 125-150 Eu2	125	2004	2007	584690	**246350142**	
Boulevard 4T Eu3	125	2008	2012	584690	**246350142**	
Gp1 Eu2	125	2006	2006	584690	**246350142**	
Rambla 125-250	125	2008	2009	58070R	**246350102**	
Rambla 125-250 E3 2Ver	125	2008	2008	58070R	**246350102**	
Sonar 4T	125	2009	2011	584690	**246350142**	
Variant Sport 4T E3	125	2012	2012	584690	**246350142**	
Boulevard 125-150	150	2002	2004	828135	**246350142**	
Boulevard 4T E3	150	2010	2010	584690	**246350142**	
Sonar 4T	150	2009	2009	584690	**246350142**	
Boulevard Eu2	200	2005	2006	584690	**246350142**	
Gp1	250	2006	2007	58048R	**246350092**	
Gp1 Low Seat 250 Eu3	250	2007	2008	58070R	**246350102**	
Rambla 125-250	250	2008	2009	58070R	**246350102**	
Rambla 125-250 E3 2Ver	250	2008	2008	58070R	**246350102**	
Rambla	300	2010	2011	58070R	**246350102**	
GILERA						
Easy Moving	50	1995	1996	830294	**246350042**	
Runner	50	1997	2000	830294	**246350042**	
Stalker	50	1997	2004	830294	**246350042**	
Storm	50	1994	1995	830294	**246350042**	
Typhoon	50	1994	1997	830294	**246350042**	
Typhoon X	50	1998	1999	830294	**246350042**	
Typhoon Xr	50	2000	2000	830294	**246350042**	
Nexus Euro3 Ie	125	2008	2010	58070R	**246350102**	
Runner Vx	125	2005	2006	584690	**246350142**	
Runner Vx Race	125	2006	2006	584690	**246350142**	
Runner Vx Sc	125	2006	2007	584690	**246350142**	
Runner Vxr	200	2005	2006	584690	**246350142**	
Runner Vxr 4T St Euro3	200	2008	2011	584690	**246350142**	
Runner Vxr Race	200	2005	2006	584690	**246350142**	
Nexus Euro3	250	2006	2007	58070R	**246350102**	
Nexus Sp Euro3	250	2006	2007	58070R	**246350102**	
Oregon	250	2006	2010	58048R	**246350092**	
Nexus Euro3	300	2008	2011	58070R	**246350102**	
Fuoco 4T-4V Ie E3 Lt	500	2013	2014	58108R	**246350122**	
Fuoco Euro3	500	2007	2013	58108R	**246350122**	
Nexus	500	2003	2005	82736R	**246350112**	
Nexus Euro3	500	2006	2011	58080R	**246350112**	
Nexus Sp Euro3	500	2006	2007	58080R	**246350112**	
ITALJET						
Jet-Set 50	50	2002	2003	-	**246350072**	
Torpedo 50 2T	50	2000	2003	-	**246350072**	
Torpedo 50 4T	50	2001	2003	-	**246350062**	
KYMCO						
Agility 4T R10	50	2006	2008	00103025	**246350152**	
Agility 4T R12	50	2007	2008	00103025	**246350152**	



STATORI

STATORS

Modello *Model*	CC	Da *From*	A *To*	OEM	Codice RMS *RMS Code*	Note *Notes*
Agility R12	50	2005	2005	00108158	**246350152**	
Dink 50 4T	50	2007	2007	00103025	**246350152**	
Filly	50	1998	2000	00108662	**246350152**	
Filly Lx	50	2001	2002	00108692	**246350152**	
People	50	1999	2004	00103300	**246350172**	
People Euro2	50	2003	2011	00103300	**246350172**	
People S	50	2005	2008	00103300	**246350172**	
People S 4T	50	2006	2008	00103025	**246350152**	
Sento	50	2008	2008	00103025	**246350152**	
Vitality 4T	50	2004	2004	00103025	**246350152**	
Agility 4T Euro3	125	2006	2008	00128172	**246350162**	
Agility Carry	125	2011	2011	00128214	**246350162**	
B&W 125-150	125	2000	2000	00128947	**246350202**	
B&W 125-150 Euro2	125	2003	2004	00128947	**246350202**	
Dink 125 Euro3	125	2006	2007	00128947	**246350202**	
Dink Classic 125-150	125	2002	2002	00128947	**246350202**	
Dink Classic 125-150 Euro2	125	2003	2003	00128947	**246350202**	
Grand Dink 125-150	125	2001	2002	00128947	**246350202**	
Grand Dink 125-150 Euro2	125	2003	2004	00128947	**246350202**	
People 125-150	125	1999	2000	00123300	**246350182**	
People S	125	2005	2005	00128184	**246350192**	
People S Dd Euro3	125	2007	2008	00128184	**246350192**	
B&W 125-150	150	2000	2000	00128947	**246350202**	
B&W 125-150 Euro2	150	2003	2004	00128947	**246350202**	
Dink 125-150	150	1997	1998	00128947	**246350202**	
Dink Lx 125-150	150	1998	2000	00128947	**246350202**	
Grand Dink 125-150 Euro2	150	2003	2004	00128947	**246350202**	
People 125-150 Euro2	150	2003	2003	00123300	**246350182**	
Dink Classic	200	2004	2004	00128039	**246350240**	
People S	200	2005	2005	00128184	**246350192**	
Grand Dink	250	2001	2002	00128937	**246350250**	
Grand Dink Euro2	250	2003	2004	00128937	**246350250**	
People S 250I	250	2007	2007	00169230	**246350442**	
X Citing I	250	2006	2007	00169230	**246350442**	
People S 300I	300	2008	2008	00169230	**246350442**	
X Citing 300I	300	2008	2008	00169230	**246350442**	
X Citing 300I R	300	2008	2009	00169230	**246350442**	
MALAGUTI						
Centro 4T	50	2008	2008	48201400	**246350062**	
Centro SI 4T	50	2010	2010	48201400	**246350062**	
Ciak Master 4T	50	2005	2006	48201400	**246350062**	
Ciak	125	2000	2001	58200400	**246350182**	
Ciak Master	125	2004	2004	58200400	**246350182**	
Ciak Master Euro 3	125	2006	2006	58200700	**246350192**	
Ciak Restyling Euro2	125	2003	2003	58200400	**246350182**	
F18 Warrior	125	2000	2002	58200200	**246350202**	
Madison	125	1999	2001	78201900	**246350230**	
Madison 3	125	2006	2009	48202000	**246350102**	
Madison R Restyling	125	2002	2002	78201900	**246350230**	
Madison R Restyling Euro2	125	2003	2004	78201900	**246350230**	
Phantom Max	125	2003	2003	78201900	**246350230**	
Ciak	150	2000	2002	58200400	**246350182**	
Ciak Master	150	2004	2004	58200400	**246350182**	
Ciak Restyling Euro2	150	2003	2003	58200400	**246350182**	
F18 Warrior	150	2000	2002	58200200	**246350202**	
Madison T	150	1999	2001	78201900	**246350230**	
Ciak Master Euro 2	200	2006	2006	58200700	**246350192**	
Madison Rs Restyling	250	2004	2004	48200800	**246350092**	



Modello *Model*	CC	Da *From*	A *To*	OEM	Codice RMS *RMS Code*	Note *Notes*
Phantom Max	250	2004	2004	48200800	**246350092**	
Spidermax Gt	500	2004	2005	48201100	**246350112**	
Spidermax Gt Euro3	500	2006	2006	48201900	**246350112**	
Spidermax Rs	500	2008	2008	48202400	**246350122**	
MBK						
Ya R Forte (Che-Ita)	50	1994	1996	3KJ855600000	**246350210**	
Ye Evolis (Ita)	50	1992	1995	3KJ855600000	**246350210**	
Yh Flipper	50	1998	2002	3KJ855600000	**246350210**	
Yh Flipper Catalitico	50	1999	2000	3KJ855600000	**246350210**	
Ym Fizz (Ita)	50	1994	1995	3KJ855600000	**246350210**	
Yn R Ovetto (Che-Ita)	50	1997	2001	3KJ855600000	**246350210**	
Yq Nitro	50	2001	2002	3KJ855600000	**246350210**	
Yq Nitro (Ita)	50	1997	2000	3KJ855600000	**246350210**	
Xn Doodo	125	2000	2001	5DS855100000	**246350230**	
Xq Thunder	125	2001	2002	5DS855100000	**246350230**	
Yp E Skyliner	125	2003	2003	5DS855100000	**246350230**	
Yp Skyliner	125	1998	2002	5DS855100000	**246350230**	
Xn Doodo	150	2001	2002	5DS855100000	**246350230**	
Xq Thunder	150	2001	2002	5DS855100000	**246350230**	
Yp Skyliner	150	2000	2002	5DS855100000	**246350230**	
Yp E Skyliner	180	2003	2003	5DS855100000	**246350230**	
PEUGEOT						
Ludix 50 Classic 1 Seater	50	2004	2007	768349	**246350351**	
Ludix 50 Classic 2 Seater	50	2006	2007	768349	**246350351**	
Ludix 50 Elegance	50	2004	2007	768349	**246350351**	
Ludix 50 Ep	50	2008	2012	768349	**246350351**	
Ludix 50 Lc Blaster 10 Zoll	50	2005	2007	768349	**246350351**	
Ludix 50 Lc Rs Blaster 12 Zoll	50	2007	2007	768349	**246350351**	
Ludix 50 One 1 Sitzer	50	2004	2007	768349	**246350351**	
Ludix 50 One 2 Sitzer	50	2006	2007	768349	**246350351**	
Ludix 50 Pro 2T	50	2008	2011	768349	**246350351**	
Ludix 50 Snake	50	2004	2007	768349	**246350351**	
Ludix 50 Trend 10 Inch	50	2004	2007	768349	**246350351**	
Geopolis 400 Ie Evolution Urban Abs	400	2010	2012	759735	**246350122**	
Geopolis 400 Ie Executive Abs	400	2007	2009	759735	**246350122**	
Geopolis 400 Ie Premium	400	2007	2012	759735	**246350122**	
Geopolis 400 Ie Rs Premium	400	2008	2012	759735	**246350122**	
Satelis 1 400 Ie Evolution Urban Abs	400	2010	2011	759735	**246350122**	
Satelis 1 400 Ie Executive Abs	400	2007	2009	759735	**246350122**	
Satelis 1 400 Ie Premium	400	2007	2012	759735	**246350122**	
Satelis 1 400 Ie Rs Premium	400	2008	2012	759735	**246350122**	
Geopolis 500 Premium	500	2008	2012	759735	**246350122**	
Satelis 500 Executive Abs	500	2007	2011	759735	**246350122**	
Satelis 500 Premium	500	2006	2012	759735	**246350122**	
Satelis 500 Rs Premium	500	2008	2012	759735	**246350122**	
PIAGGIO						
Ape	50	2009	2017	256309	**246350473**	Modello Cross - *Cross model*
Ape	50	2011	2017	642205	**246350362**	
Ape FI - FI2	50	1989	1995	199500	**246350011**	
Ape FI - FI2	50	1989	1995	199500	**246350013**	
Ape FI3 Europa	50	1996	1999	199500	**246350011**	
Ape FI3 Europa	50	1996	1999	199500	**246350013**	
Ape FI3 Europa	50	1996	1999	256309	**246350473**	Modello Cross - *Cross model*
Ape Mix 2T	50	1998	2008	256309	**246350473**	Modello Cross - *Cross model*
Ape Rst Mix	50	1999	2003	199500	**246350011**	
Ape Rst Mix	50	1999	2003	199500	**246350013**	
Ape Rst Mix	50	1999	2003	256309	**246350473**	Modello Cross - *Cross model*
Ape Tm P	50	1985	1989	199495	**246350061**	



STATORI

STATORS

Modello *Model*	CC	Da *From*	A *To*	OEM	Codice RMS *RMS Code*	Note *Notes*
Ape Tm P	50	1985	1989	199495	**246350063**	
Diesis	50	2001	2001	830296	**246350072**	
Fly 2T	50	2005	2007	584525	**246350072**	
Fly 2T	50	2010	2011	639865	**246350072**	
Fly 4T	50	2005	2007	969228	**246350062**	
Fly 4T & 25-30 Km/H	50	2008	2011	969228	**246350062**	
Fly 4T 2V	50	2013	2015	969228	**246350062**	
Fly 4T 2V 25-30Km-H	50	2012	2014	969228	**246350062**	
Fly 4T 4V	50	2012	2013	833632	**246350082**	
Fly 4T Motore Chn	50	2006	2007	969228	**246350062**	
Free Delivery	50	2000	2001	830294	**246350042**	
Free FI	50	1995	2002	830294	**246350042**	
Liberty	50	1997	2005	830294	**246350042**	
Liberty 2T	50	2006	2008	639865	**246350072**	
Liberty 2T Rst	50	2004	2004	830296	**246350072**	
Liberty 2T Sport	50	2006	2006	584525	**246350072**	
Liberty 2T Sport	50	2007	2008	639865	**246350072**	
Liberty 4T	50	2000	2008	969228	**246350062**	
Liberty 4T Delivery - Single	50	2010	2014	969228	**246350062**	
Liberty 4T Delivery Tnt	50	2009	2009	969228	**246350062**	
Liberty 4T Ptt - Double - Nexive	50	2009	2015	969228	**246350062**	
Liberty 4T Ptt (Deu)	50	2007	2012	969228	**246350062**	
Liberty 4T Rst	50	2004	2004	969228	**246350062**	
Liberty 4T Sport	50	2006	2008	969228	**246350062**	
Liberty Moc 2T & Elle	50	2009	2013	639865	**246350072**	
Liberty Moc 4T & Elle	50	2009	2016	969228	**246350062**	
Liberty Ptt Eu2	50	2004	2005	830296	**246350072**	
Nrg	50	1994	1996	830294	**246350042**	
Nrg Extreme	50	1999	2000	830294	**246350042**	
Nrg Mc3	50	2001	2004	830294	**246350042**	
Nrg Power Dd	50	2005	2006	584525	**246350072**	
Nrg Power Dd	50	2007	2015	639865	**246350072**	
Nrg Power Dd Serie Speciale	50	2007	2012	639865	**246350072**	
Nrg Power Dt	50	2006	2006	584525	**246350072**	
Nrg Power Dt	50	2007	2015	639865	**246350072**	
Nrg Power Dt Serie Speciale	50	2007	2008	639865	**246350072**	
Nrg Rst Mc2	50	1996	1998	830294	**246350042**	
Ntt	50	1995	1996	830294	**246350042**	
Quartz	50	1992	1996	830294	**246350042**	
Sfera	50	1991	1993	830294	**246350042**	
Sfera Rst	50	1995	1997	830294	**246350042**	
Typhoon	50	2001	2004	830296	**246350072**	
Typhoon	50	2005	2008	584525	**246350072**	
Typhoon	50	2005	2011	639865	**246350072**	
Typhoon 2T Euro2	50	2010	2016	639865	**246350072**	
Typhoon 2T Euro3 Ch	50	2011	2011	639865	**246350072**	
Vespa 50	50	1958	1958	150776	**246350433**	
Vespa Et2	50	1997	2005	830294	**246350042**	
Vespa Et4	50	2000	2005	969228	**246350062**	
Vespa FI	50	1990	1990	199495	**246350061**	
Vespa FI	50	1990	1990	199495	**246350063**	
Vespa Lx 2T	50	2005	2013	639865	**246350072**	
Vespa Lx 2T Touring & 30Km	50	2010	2013	639865	**246350072**	
Vespa Lx 4T	50	2005	2009	969228	**246350062**	
Vespa Lx 4T-4V	50	2009	2013	833632	**246350082**	
Vespa Lx 4T-4V Touring	50	2010	2013	833632	**246350082**	
Vespa Lxv 2T	50	2006	2009	639865	**246350072**	
Vespa Lxv 2T Navy	50	2008	2008	639865	**246350072**	



Modello *Model*	CC	Da *From*	A *To*	OEM	Codice RMS *RMS Code*	Note *Notes*
Vespa N	50	1989	1990	199495	**246350061**	
Vespa N	50	1989	1990	199495	**246350063**	
Vespa Pk	50	1982	1984	199500	**246350011**	Connettore a 5 attacchi - *5 Pins connector*
Vespa Pk	50	1982	1984	199500	**246350013**	Connettore a 5 attacchi - *5 Pins connector*
Vespa Pk	50	1982	1984	199495	**246350061**	Connettore a 3 attacchi - *3 Pins connector*
Vespa Pk	50	1982	1984	199495	**246350063**	Connettore a 3 attacchi - *3 Pins connector*
Vespa Pk Xl	50	1985	1988	199495	**246350061**	
Vespa Pk Xl	50	1985	1988	199495	**246350063**	
Vespa Pk Xl Rush	50	1988	1989	199495	**246350061**	
Vespa Pk Xl Rush	50	1988	1989	199495	**246350063**	
Vespa Primavera 2T	50	2013	2017	639865	**246350072**	
Vespa Primavera 4T 2V 25 Km/H	50	2014	2016	969228	**246350062**	
Vespa Primavera 4T-4V	50	2013	2017	833632	**246350082**	
Vespa S 2T & College	50	2007	2012	639865	**246350072**	
Vespa S 4T-4V & College	50	2008	2012	833632	**246350082**	
Vespa Sprint 2T 2V	50	2014	2016	639865	**246350072**	
Vespa Sprint 4T 2V 25 Km/H	50	2014	2016	969228	**246350062**	
Vespa Sprint 4T 4V	50	2014	2017	833632	**246350082**	
Zip	50	1992	1996	830294	**246350042**	
Zip	50	2000	2004	584525	**246350072**	
Zip 2T	50	2008	2013	639865	**246350072**	
Zip 4T	50	2000	2013	969228	**246350062**	
Zip 4T 25Km-H	50	2006	2016	969228	**246350062**	
Zip Fast Raider Rst	50	1996	1997	830294	**246350042**	
Zip Rst	50	1996	1999	830294	**246350042**	
Zip Sp	50	1996	2000	830294	**246350042**	
Zip Sp	50	2001	2004	830296	**246350072**	
Zip Sp Euro2	50	2006	2013	639865	**246350072**	
Skr City	80	1999	1999	830294	**246350042**	
Fly 4T	100	2006	2014	969228	**246350062**	
Free	100	2002	2003	969228	**246350062**	
Zip 4T	100	2006	2010	969228	**246350062**	
Beverly	125	2001	2003	828135	**246350142**	
Beverly Euro 3	125	2007	2008	639727	**246350321**	
Beverly Euro 3 Mic	125	2007	2007	639727	**246350321**	
Beverly Euro 3 Sport	125	2007	2008	639727	**246350321**	
Beverly Rst	125	2004	2005	828135	**246350142**	
Beverly Rst	125	2005	2007	639727	**246350321**	
Beverly Tourer Euro3	125	2007	2010	639727	**246350321**	
Carnaby	125	2007	2010	639727	**246350321**	
Fly 4T 3V Ie E3 Dt	125	2013	2015	B016543	**246350372**	
Fly 4T 3V Ie Euro3 Lem	125	2012	2013	B016543	**246350372**	
Hexagon Gtx	125	2000	2000	833697	**246350142**	
Liberty	125	2001	2002	833697	**246350142**	
Liberty 4T 2V Ie Ptt - Ita	125	2012	2013	643166	**246350392**	
Liberty 4T 3V Ie E3	125	2013	2014	B016543	**246350372**	
Liberty Rst	125	2004	2005	828135	**246350142**	
Mp3	125	2006	2008	639727	**246350321**	
Mp3 Ibrido	125	2009	2010	58070R	**246350102**	
Mp3 Ie	125	2008	2009	58070R	**246350102**	
Skipper 4T	125	2000	2002	833697	**246350142**	
Super Hexagon Gtx 12	125	2001	2002	833697	**246350142**	
Vespa 125	125	1960	1960	150776	**246350433**	
Vespa Et3 125	125	1976	1983	186974	**246350220**	
Vespa Et4	125	1999	2002	833697	**246350142**	
Vespa Fl	125	1989	1990	199495	**246350061**	
Vespa Fl	125	1989	1990	199495	**246350063**	
Vespa Granturismo	125	2003	2005	833697	**246350142**	



STATORI

STATORS

Modello *Model*	**CC**	**Da** *From*	**A** *To*	**OEM**	**Codice RMS** *RMS Code*	**Note** *Notes*
Vespa Granturismo Euro 3	125	2006	2007	639727	**246350321**	
Vespa Gt 125	125	1966	1973	150776	**246350433**	
Vespa Gtr 125	125	1969	1978	150776	**246350433**	
Vespa Gts Euro3	125	2007	2012	639727	**246350321**	
Vespa Gtv	125	2006	2008	639727	**246350321**	
Vespa Gtv 4T Navy Euro3	125	2008	2008	639727	**246350321**	
Vespa Lx 4T 3V Ie - Touring	125	2012	2013	B016543	**246350372**	
Vespa Pk	125	1982	1984	199500	**246350011**	Connettore a 5 attacchi - *5 Pins connector*
Vespa Pk	125	1982	1984	199500	**246350013**	Connettore a 5 attacchi - *5 Pins connector*
Vespa Pk	125	1982	1984	199495	**246350061**	Connettore a 3 attacchi - *3 Pins connector*
Vespa Pk	125	1982	1984	199495	**246350063**	Connettore a 3 attacchi - *3 Pins connector*
Vespa Pk Xl	125	1986	1989	199495	**246350061**	
Vespa Pk Xl	125	1986	1989	199495	**246350063**	
Vespa Px	125	2011	2016	642427	**246350292**	
Vespa Px 125 E	125	1981	1997	217866	**246350073**	
Vespa Px 125 E Arcobaleno	125	1981	1997	217866	**246350073**	
Vespa Px T5	125	1985	1989	232172	**246350453**	
Vespa Pxe Arcobaleno	125	1981	1997	217983	**246350280**	Modello con avviamento elettrico - *Eletric start model*
Vespa S 4T 3V Ie	125	2012	2012	B016543	**246350372**	
Vespa Super 125	125	1966	1968	150776	**246350433**	
Vespa Ts 125	125	1975	1978	150776	**246350433**	
X Evo	125	2007	2016	639727	**246350321**	
X7 Euro 3	125	2008	2008	639727	**246350321**	
X8	125	2004	2004	828135	**246350142**	
X8 Premium Euro 2	125	2006	2006	639727	**246350321**	
X8 Premium Euro 3	125	2006	2007	639727	**246350321**	
X9	125	2001	2002	833697	**246350142**	
X9 Evolution	125	2003	2003	827902	**246350142**	
X9 Evolution Euro3	125	2007	2007	639727	**246350321**	
Zip	125	2000	2002	833697	**246350142**	
Liberty 4T 3V Lem	150	2013	2014	B016543	**246350372**	
Vespa 150	150	1959	1962	150776	**246350433**	
Vespa Lt 4T 3V Ie	150	2014	2014	B016543	**246350372**	
Vespa Lx 4T 3V Ie - Touring	150	2012	2013	B016543	**246350372**	
Vespa Px	150	2011	2017	642427	**246350292**	
Vespa Px 150 E	150	1981	1997	217866	**246350073**	
Vespa Px 150 E Arcobaleno	150	1981	1997	217866	**246350073**	
Vespa Sprint 150	150	1965	1974	150776	**246350433**	
Vespa Super 150	150	1965	1979	150776	**246350433**	
X9 Amalfi	180	2000	2003	828135	**246350142**	
Carnaby	200	2007	2008	639727	**246350321**	
Liberty Rst	200	2004	2004	828135	**246350142**	
Vespa Px 200 E	200	1981	1997	217866	**246350073**	
Vespa Px 200 E Arcobaleno	200	1981	1997	217866	**246350073**	
X9	200	2002	2003	827902	**246350142**	
X9 Evolution	200	2003	2003	827902	**246350142**	
Beverly	250	2006	2007	58048R	**246350092**	
Beverly Cruiser	250	2007	2009	58070R	**246350102**	
Beverly Euro 3 Mic	250	2007	2007	58070R	**246350102**	
Beverly Ie Euro 3	250	2006	2008	58070R	**246350102**	
Beverly Rst	250	2004	2005	58048R	**246350092**	
Beverly Sport	250	2006	2008	58070R	**246350102**	
Beverly Tourer Euro3	250	2007	2009	58070R	**246350102**	
Carnaby	250	2008	2008	58070R	**246350102**	
Mp3	250	2006	2008	58070R	**246350102**	
Mp3 Lt	250	2008	2009	58070R	**246350102**	
Mp3 Mic	250	2008	2009	58070R	**246350102**	
Vespa Gt 60 Euro 3	250	2006	2007	58070R	**246350102**	



Modello *Model*	CC	Da *From*	A *To*	OEM	Codice RMS *RMS Code*	Note *Notes*
Vespa Gts	250	2005	2016	58070R	**246350102**	
Vespa Gts Abs	250	2005	2012	58070R	**246350102**	
Vespa Gtv	250	2006	2009	58070R	**246350102**	
Vespa Gtv 4T Navy Euro3	250	2007	2007	58070R	**246350102**	
X Evo	250	2007	2016	58070R	**246350102**	
X7 Euro 3	250	2008	2008	58070R	**246350102**	
X8 Euro3	250	2005	2008	58112R	**246350102**	
X9 Evolution	250	2004	2004	584495	**246350092**	
X9 Evolution	250	2006	2006	58048R	**246350092**	
Beverly Tourer Euro3	300	2009	2010	638848	**246350102**	
Carnaby Cruiser	300	2009	2012	58070R	**246350102**	
Vespa Gtv Via Montenapoleone	300	2010	2010	58070R	**246350102**	
Beverly Euro 3	400	2006	2007	58080R	**246350112**	
Beverly Tourer Euro3	400	2008	2010	58108R	**246350122**	
Mp3	400	2007	2008	58108R	**246350122**	
Mp3 Ie Lt - Mp3 Ie Lt Sport	400	2008	2010	58108R	**246350122**	
Mp3 Ie Lt Touring	400	2011	2011	58108R	**246350122**	
Mp3 Mic	400	2008	2010	58108R	**246350122**	
Mp3 Rl Touring	400	2011	2011	58108R	**246350122**	
X Evo	400	2007	2011	58080R	**246350112**	
X8 Euro3	400	2006	2008	58080R	**246350112**	
Beverly	500	2002	2004	82736R	**246350112**	
Beverly	500	2005	2006	58080R	**246350112**	
Beverly Cruiser	500	2007	2012	58108R	**246350122**	
Beverly Euro 3	500	2006	2008	58080R	**246350112**	
Mp3 Lt Sport - Business	500	2011	2013	58108R	**246350122**	
Mp3 Rl Sport - Business	500	2011	2012	58108R	**246350122**	
X9	500	2001	2002	58039R	**246350112**	
X9 Evolution	500	2003	2005	82736R	**246350112**	
X9 Evolution	500	2006	2007	58080R	**246350112**	
X9 Evolution Abs	500	2006	2007	58080R	**246350112**	
SYM						
Hd Eu2	125	2003	2004	31120H9A001	**246350260**	
Hd Euro3	125	2007	2008	31120H9A001	**246350260**	
Hd Evo	125	2005	2006	31120H9A001	**246350260**	
Hd Evo Euro3	125	2007	2011	31120H9A001	**246350260**	
Hd Evo Tamburo Euro3	125	2008	2009	31120H9A001	**246350260**	
Hd2	125	2011	2014	31120H9A000	**246350260**	
Joyride	125	2001	2002	31120H9A000	**246350260**	
Joyride Eu2	125	2003	2004	31120H9A001	**246350260**	
Joyride Euro2	125	2005	2006	31120H9A001	**246350260**	
Joyride Euro3	125	2007	2007	31120H9A001	**246350260**	
Joyride Evo	125	2009	2014	31120H9A001	**246350260**	
Joyride	150	2001	2002	31120H9A000	**246350260**	
Super Duke	150	1999	2002	31120H01000	**246350202**	
Hd Eu2	200	2003	2004	31120H9A001	**246350260**	
Hd Evo Euro2	200	2005	2006	31120H9A001	**246350260**	
Joyride	200	2003	2003	31120H9A001	**246350260**	
Joyride Eu2	200	2003	2004	31120H9A001	**246350260**	
Joyride Euro2	200	2005	2006	31120H9A001	**246350260**	
YAMAHA						
Ya R Axis	50	1995	1996	3KJ855600000	**246350210**	
Yh Why	50	1998	2002	3KJ855600000	**246350210**	
Yh Why Euro1	50	1999	2000	3KJ855600000	**246350210**	
Ym Breeze	50	1994	1995	3KJ855600000	**246350210**	
Yn R Neo'S	50	1997	2001	3KJ855600000	**246350210**	
Yq Aerox	50	1997	2002	3KJ855600000	**246350210**	
Yq Aerox R	50	1999	2000	3KJ855600000	**246350210**	



STATORI

STATORS

Modello *Model*	**CC**	**Da** *From*	**A** *To*	**OEM**	**Codice RMS** *RMS Code*	**Note** *Notes*
Xn Teo'S	125	2000	2000	5DS855100000	**246350230**	
Xq Maxster	125	2001	2002	5DS855100000	**246350230**	
Yp125 Majesty	125	1998	2002	5DS855100000	**246350230**	
Yp125E Majesty	125	2003	2009	5DSH55100000	**246350230**	
Xn Teo'S	150	2001	2002	5DS855100000	**246350230**	
Xq Maxster	150	2001	2002	5DS855100000	**246350230**	
Yp150 Majesty	150	2000	2002	5DS855100000	**246350230**	
Yp180E Majesty	180	2003	2006	5DS855100000	**246350230**	
Vp X-City	250	2007	2012	1C0H14101000	**246350460**	
Yp250R Black X-Max	250	2009	2009	1C0H14101000	**246350460**	
Yp250R X-Max	250	2007	2012	1C0H14101000	**246350460**	
Yp250R X-Max Sport	250	2011	2012	1C0H14101000	**246350460**	
Yp250Ra X-Max Abs	250	2011	2012	1C0H14101000	**246350460**	
Yp400 Majesty	400	2004	2008	5RU814100000	**246350411**	
Yp400 Majesty	400	2009	2011	34B814100000	**246350420**	
Yp400 Majesty Abs	400	2007	2008	5RU814100000	**246350411**	
Yp400 Majesty Abs	400	2009	2011	34B814100000	**246350420**	
Xp T-Max	500	2001	2003	5GJ814100100	**246350400**	
Xp T-Max	500	2004	2005	5VU814100200	**246350330**	
Xp T-Max	500	2006	2006	5VU814100000	**246350330**	
Xp T-Max	500	2007	2007	5VU814100100	**246350330**	
Xp T-Max Abs	500	2005	2006	5VU814100000	**246350330**	
Xp T-Max Abs	500	2007	2007	5VU814100100	**246350330**	
Xp T-Max Black Max	500	2006	2006	5VU814100000	**246350330**	
Xp T-Max Black Max-Night Max	500	2007	2007	5VU814100100	**246350330**	



246350011

246350013

5 POLI | *5 POLES*
3 Fili Fastom - Connettore a 5 attacchi | *3 Fastom wires - 5 Pins connector*

PIAGGIO: R.O. 199500



246350042

6 POLI - Ø96 MM | *6 POLES - Ø96 MM*
Di primo equipaggiamento | *OEM Quality*

GILERA - PIAGGIO: R.O. 830294



246350052

6 POLI - Ø94 MM | *6 POLES - Ø94 MM*
Con piastra | *With plate*
Di primo equipaggiamento | *OEM Quality*

APRILIA - DERBI: R.O. 82852R



246350061

246350063

6 POLI | *6 POLES*
3 Fili Fastom - Connettore a 3 attacchi | *3 Fastom wires - 3 Pins connector*

PIAGGIO: R.O. 199495



246350062

12 POLI - Ø84 MM | *12 POLES - Ø84 MM*
Con pick-up | *With pick-up*
Di primo equipaggiamento | *OEM Quality*

APRILIA: R.O. AP8551076
DERBI - PIAGGIO: R.O. 969228
ITALJET
MALAGUTI: R.O. 48201400



246350072

6 POLI - Ø96 MM | *6 POLES - Ø96 MM*
Di primo equipaggiamento | *OEM Quality*

APRILIA: R.O. 584525
DERBI: R.O. 830296
ITALJET
PIAGGIO: R.O. 830296





246350073

5 POLI | *5 POLES*

PIAGGIO: R.O. 217866



246350082

12 POLI - Ø84 MM | *12 POLES - Ø84 MM*
Con pick-up - Connettore a 3 attacchi | *With pick-up - 3 Pins connector*
Di primo equipaggiamento | *OEM Quality*

APRILIA - PIAGGIO: R.O. 833632



246350092

18 POLI - Ø95 MM | *18 POLES - Ø95 MM*
Con pick-up | *With pick-up*
Di primo equipaggiamento | *OEM Quality*

APRILIA: R.O. AP8577045
DERBI - GILERA: R.O. 58048R
MALAGUTI: R.O. 48200800
PIAGGIO: R.O. 58048R



246350102

18 POLI - Ø94,7 MM | *18 POLES - Ø94,7 MM*
Con pick-up a 2 cavi | *With 2 cables pick-up*
Di primo equipaggiamento | *OEM Quality*

APRILIA - DERBI - GILERA: R.O. 638848
MALAGUTI: R.O. 48202000
PIAGGIO: R.O. 638848



246350112

18 POLI - Ø96 MM | *18 POLES - Ø96 MM*
Di primo equipaggiamento | *OEM Quality*

APRILIA: R.O. AP8560100
GILERA: R.O. 58080R
MALAGUTI: R.O. 48201900
PIAGGIO: R.O. 58080R



246350122

18 POLI - Ø96 MM | *18 POLES - Ø96 MM*
Con pick-up a 2 cavi | *With 2 cables pick-up*
Di primo equipaggiamento | *OEM Quality*

APRILIA - GILERA: R.O. 58108R
MALAGUTI: R.O. 48202400
PIAGGIO: R.O. 58108R
PEUGEOT: R.O. 759735



246350142

12 POLI - Ø84 MM | *12 POLES - Ø84 MM*
Di primo equipaggiamento | *OEM Quality*

APRILIA - DERBI - GILERA: R.O. 584690
PIAGGIO: R.O. 828135



246350152

8 POLI - Ø88 MM | *8 POLES - Ø88 MM*
Con pick-up - 12V | *With pick-up - 12V*
Di primo equipaggiamento | *OEM Quality*

KYMCO: R.O. 00103025 - 31120-LBD6-E0A



246350162

8 POLI - Ø88 MM | *8 POLES - Ø88 MM*
Con pick-up - 12V | *With pick-up - 12V*
Di primo equipaggiamento | *OEM Quality*

KYMCO: R.O. 00128172 - 31120-KUDU-90A





246350172

8 POLI - Ø88 MM | *8 POLES - Ø88 MM*
Con pick-up - 12V | *With pick-up - 12V*
Di primo equipaggiamento | *OEM Quality*

KYMCO: R.O. 00103300 - 31120-KFA6-900



246350182

8 POLI - Ø88 MM | *8 POLES - Ø88 MM*
Con pick-up - 12V | *With pick-up - 12V*
Di primo equipaggiamento | *OEM Quality*

KYMCO: R.O. 00123300 - 31120-KHB4-90A
MALAGUTI: R.O. 58200400



246350192

12 POLI - Ø88,4 MM | *12 POLES - Ø88,4 MM*
12V
Di primo equipaggiamento | *OEM Quality*

KYMCO: R.O. 00128184 - 31120-LCD3-E0B
MALAGUTI: R.O. 58200700



246350202

10 POLI - Ø93 MM | *10 POLES - Ø93 MM*
12V
Di primo equipaggiamento | *OEM Quality*

KYMCO: R.O. 00128947 - 31120-KBE-9000
MALAGUTI: R.O. 58200200
SYM: R.O. 31120H01000



246350210

MBK - YAMAHA: R.O. 3KJ855600000



246350220

5 POLI | *5 POLES*

PIAGGIO: R.O. 186974



246350230

16 POLI | *16 POLES*

MALAGUTI: R.O. 78201900
MBK - YAMAHA: R.O. 5DS855100000



246350240

11 POLI | *11 POLES*
Con pick-up - 12V | *With pick-up - 12V*

KYMCO: R.O. 00128039 - 31120-KKC2-81A



246350250

18 POLI - Ø91,8 MM | *18 POLES - Ø91,8 MM*
Con pick-up - 12V | *With pick-up - 12V*

KYMCO: R.O. 00128937 - 31120-KKC4-90A



246350260

11 POLI | *11 POLES*

SYM: R.O. 31120H9A001



246350280 NEW

5 POLI | *5 POLES*
Con pick-up - 12V | *With pick-up - 12V*

PIAGGIO: R.O. 217983



246350292

12 POLI | *12 POLES*

PIAGGIO: R.O. 642427



246350321

12 POLI | *12 POLES*

PIAGGIO: R.O. 639727



246350330

16 POLI | *16 POLES*

YAMAHA: R.O. 5VU814100100



246350351

6 POLI | *6 POLES*

PEUGEOT: R.O. 768349



246350362

12 POLI | *12 POLES*

PIAGGIO: R.O. 642205



246350372

12 POLI | *12 POLES*

PIAGGIO: R.O. B016543



246350392

12 POLI | *12 POLES*

PIAGGIO: R.O. 643166





246350400

18 POLI | *18 POLES*
YAMAHA: R.O. 5GJ814100100



246350411

18 POLI | *18 POLES*
YAMAHA: R.O. 5RU814100000



246350420

18 POLI | *18 POLES*
YAMAHA: R.O. 34B814100000



246350433

3 POLI | *3 POLES*
PIAGGIO: R.O. 150776



246350442

18 POLI | *18 POLES*
KYMCO: R.O. 00169230 - 3112-LDF-90A



246350453 NEW

5 POLI - Ø 95 MM | *5 POLES - Ø 95 MM*
PIAGGIO: R.O. 232172



246350460 NEW

18 POLI | *18 POLES*

YAMAHA: R.O. 1C0H14101000



246350473 NEW

5 POLI | *5 POLES*
3 Fili | *3 Wire*
PIAGGIO: R.O. 256309





Modello *Model*	CC	Da *From*	A *To*	Telaio *Frame*	OEM	Codice RMS *RMS Code*
PIAGGIO						
Ape	50	2009	2017	C8000	642204	**246350312**
Vespa Px	125	2011	2016	M74100	642426	**246350302**
Vespa Px	150	2011	2016	M74200	642426	**246350302**

246350302

PIAGGIO: R.O. 642426



246350312

PIAGGIO: R.O. 642204





Modello *Model*	**CC**	**Da** *From*	**A** *To*	**Telaio** *Frame*	**OEM**	**Codice RMS** *RMS Code*
APRILIA						
Mojito Custom 2T Motore Piaggio	50	2004	2010	TF000\TFA00	58136R	**246360072**
Rs	50	2006	2010	PL000\RG000	82852R	**246360052**
Rs4	50	2011	2013	TK000	82852R	**246360052**
Rs4 Replica	50	2014	2016	TK000\VX000	82852R	**246360052**
Scarabeo 4T	50	2002	2006	TG000	9692975	**246360062**
Scarabeo 4T Restyling Eu3	50	2006	2009	TGA00\TGB00	9692975	**246360062**
Sport City One 2T	50	2008	2011	SBA00\TCA00	58136R	**246360072**
Sport City One 4T	50	2008	2010	SB000\SBC00	9692975	**246360062**
Sr Iniezione E Carburatore	50	2014	2014	VFB00\VFD00\VFU00	58136R	**246360072**
Sr Motard 2T	50	2012	2014	LBMC	58136R	**246360072**
Sr R Factory Ie E Carburatore	50	2010	2014	VFB00\VFD00\VFU00	58136R	**246360072**
Sr R, R Factory	50	2004	2009	VFB00\VFD00\VFJ\U	58136R	**246360072**
Scarabeo 4T	100	2001	2005	SA000\VA000	9692975	**246360062**
Scarabeo 4T	100	2010	2012	VAA00\VAC00	9692975	**246360062**
Scarabeo 4T	100	2014	2014	VAB00	9692975	**246360062**
Scarabeo 4T Net	100	2009	2009	VAC\VAA	9692975	**246360062**
Scarabeo 4T Net Eu3	100	2010	2010	ZD4VAC\ZD4VAA	9692975	**246360062**
Scarabeo 4T Restyling	100	2006	2009	VAA00\VAC00	9692975	**246360062**
Atlantic Sprint 400-500	400	2005	2008	VL000\VLA00\VLB00	58080R+58040R	**246360112**
Scarabeo Light 400-500	400	2006	2008	VR000\VRA00\VRE00	58080R+58040R	**246360112**
Atlantic	500	2001	2004	PT00\VH00	58080R+58040R	**246360112**
Scarabeo	500	2003	2006	RT00	58080R+58040R	**246360112**
DERBI						
Atlantis 2T	50	2010	2010	AL4AE2	58136R	**246360072**
Atlantis 2T Eu2	50	2007	2009		58136R	**246360072**
Atlantis 4T Eu2	50	2007	2007		9692975	**246360062**
Atlantis O2	50	2002	2002	AL1A1A	58136R	**246360072**
Atlantis O2 Bullet	50	2003	2005	AL1AE2	58136R	**246360072**
Atlantis O2 City	50	2003	2006	AL1AE2	58136R	**246360072**
Atlantis O2 Red Bullet	50	2003	2003	AL1AE2	58136R	**246360072**
Atlantis O2 Two Chic	50	2005	2005	AL1AE2	58136R	**246360072**
Boulevard 2T	50	2009	2014	BR1A1A	58136R	**246360072**
Boulevard 4T Eu2 25 Km/H	50	2009	2009		9692975	**246360062**
Gp1	50	2001	2002	PREDWB\PREDSB	58136R	**246360072**
Gp1	50	2003	2003	PREDXB	58136R	**246360072**
Gp1 E2	50	2003	2003	PREDXB	58136R	**246360072**
Gp1 Euro2	50	2005	2005	PR1A1A	58136R	**246360072**
Gp1 Open Eu2	50	2006	2009	PR1B1A	58136R	**246360072**
Gp1 Race Eu2	50	2005	2007	PR1A1A	58136R	**246360072**
Gpr 2T	50	2013	2013	PVXA00	82852R	**246360052**
Gpr 2T Eu2	50	2009	2010	RF1A1A	82852R	**246360052**
Gpr Nude & Gpr Nude Tuning	50	2006	2008		82852R	**246360052**
Gpr Nude Sport	50	2006	2006		82852R	**246360052**
Gpr R Eu2 - Gpr Replica Eu2	50	2008	2008		82852R	**246360052**
Gpr Racing Eu2	50	2006	2006	GR1D1A	82852R	**246360052**
Gpr Replica & Gpr R Eu2	50	2006	2006	GR1D1A	82852R	**246360052**
Gpr Replica 2T Malossi	50	2007	2007	GR1D1A	82852R	**246360052**
Gpr Replica Pesek Eu2	50	2007	2007		82852R	**246360052**
Senda Hyp Drd Evo Limited Edition Eu2	50	2008	2008		82852R	**246360052**
Senda R Drd Pro Eu2	50	2005	2011	SA1A1A	82852R	**246360052**
Senda Sm Drd Pro Eu2	50	2005	2011	SA2A1A	82852R	**246360052**
Senda Sm Drd Pro Eu2 2Ver	50	2005	2008	SA2A1A	82852R	**246360052**
Sonar 2T	50	2009	2009	LR1A1A	58136R	**246360072**
Variant Sport 2T	50	2012	2012	SBA00	58136R	**246360072**
Atlantis 50-100 4T	100	2004	2006	AL1BE2\AT1B1A	9692975	**246360062**
Boulevard 4T	100	2010	2011	M57A00	9692975	**246360062**
Gp1	250	2006	2007	PT1A1A	58048R+58049R	**246360092**



VOLANI COMPLETI

COMPLETE MAGNETOS

Modello *Model*	**CC**	**Da** *From*	**A** *To*	**Telaio** *Frame*	**OEM**	**Codice RMS** *RMS Code*
GILERA						
Dna	50	2000	2002	C2700	58136R	**246360072**
Dna	50	2005	2007	C2700	58136R	**246360072**
Dna Gp Experience	50	2003	2004	C2700	58136R	**246360072**
Easy Moving	50	1995	1996	SSP2T	830293	**246360042**
Ice	50	2001	2005	C3000	58136R	**246360072**
Runner	50	1997	2000	C1400	830293	**246360042**
Runner Poggiali	50	2002	2002	C3620	58136R	**246360072**
Runner Sp	50	2002	2004	C3640	58136R	**246360072**
Runner Sp	50	2005	2012	C46100	58136R	**246360072**
Runner Sp Special Edition	50	2007	2007	C46100	58136R	**246360072**
Runner Sp St & Simoncelli	50	2008	2009	C46100	58136R	**246360072**
Stalker	50	1997	2004	C1300	830293	**246360042**
Stalker	50	1997	2004	C1300	58136R	**246360072**
Stalker	50	2005	2011	C40100	58136R	**246360072**
Stalker Naked	50	2008	2008	C40102	58136R	**246360072**
Stalker Special Edition	50	2007	2008	C40100	58136R	**246360072**
Storm	50	1994	1995	TEC1T	830293	**246360042**
Storm Euro2	50	2007	2007	C29000	58136R	**246360072**
Typhoon	50	1994	1997	TEC1T	830293	**246360042**
Typhoon X	50	1998	1999	TEC2T	830293	**246360042**
Typhoon Xr	50	2000	2000	C1900	830293	**246360042**
Oregon	250	2006	2010	RGEYN25D5	58048R+58049R	**246360092**
Nexus	500	2003	2005	M35100	58080R+58040R	**246360112**
Nexus Euro3	500	2006	2008	M35200	58080R+58040R	**246360112**
Nexus Euro3	500	2009	2011	M35200	58080R+58040R	**246360112**
Nexus Sp Euro3	500	2006	2007	M35200	58080R+58040R	**246360112**
KYMCO						
Downtown I	200	2010	2010	V22000	00131071+00131070	**246360932**
People Gti	200	2010	2014	V42000	00131071+00131070	**246360932**
Downtown 300I	300	2009	2009	V20000	00131071+00131070	**246360932**
Downtown Abs	300	2010	2010	V20010	00131071+00131070	**246360932**
Downtown Abs I	300	2011	2016	V20030	00131071+00131070	**246360932**
Downtown I	300	2011	2011	V20020	00131071+00131070	**246360932**
People Gti	300	2010	2010	V40000	00131071+00131070	**246360932**
People Gti	300	2011	2011	V40020	00131071+00131070	**246360932**
People Gti	300	2014	2014	V40020	00131071+00131070	**246360932**
People Gti Abs	300	2012	2012	V40010	00131071+00131070	**246360932**
People Gti Abs	300	2014	2014	V40010	00131071+00131070	**246360932**
People Gti Abs E4	300	2016	2016	C80000	00131071+00131070	**246360932**
X Citing I	400	2013	2013	D60000	00131154+00131155	**246360922**
X Citing I	400	2015	2015	D60000	00131154+00131155	**246360922**
X Citing I Abs	400	2014	2014	D60010	00131154+00131155	**246360922**
X Citing I Abs	400	2015	2015	D60010	00131154+00131155	**246360922**
X Citing I Abs E4	400	2016	2016	D61010	00131154+00131155	**246360922**
PEUGEOT						
Ludix 50 Classic 1 Seater	50	2004	2007	VGA L1AABM/EM	768349	**246360902**
Ludix 50 Classic 2 Seater	50	2006	2007	VGA L1AAEA	768349	**246360902**
Ludix 50 Elegance	50	2004	2007	VGA L1AABA/EA	768349	**246360902**
Ludix 50 Ep	50	2008	2012	-	768349	**246360902**
Ludix 50 Lc Blaster 10 Zoll	50	2005	2007	VGA L1ACCA	768349	**246360902**
Ludix 50 Lc Rs Blaster 12 Zoll	50	2007	2007	-	768349	**246360902**
Ludix 50 One 1 Sitzer	50	2004	2007	VGA L1AAAM/DM	768349	**246360902**
Ludix 50 One 2 Sitzer	50	2006	2007	VGA L1AADA	768349	**246360902**
Ludix 50 Pro 2T	50	2008	2011	-	768349	**246360902**
Ludix 50 Snake	50	2004	2007	VGA L1AAACA/FA	768349	**246360902**
Ludix 50 Trend 10 Inch	50	2004	2007	VGA L1AAAAA	768349	**246360902**



Modello *Model*	CC	Da *From*	A *To*	Telaio *Frame*	OEM	Codice RMS *RMS Code*
PIAGGIO						
Diesis	50	2001	2001	C3400	58136R	**246360072**
Fly 2T	50	2005	2007	C44100	58136R	**246360072**
Fly 2T	50	2010	2011	C44700	58136R	**246360072**
Fly 4T	50	2005	2007	C44200	9692975	**246360062**
Fly 4T & 25-30 Km/H	50	2008	2011	C44500	9692975	**246360062**
Fly 4T 2V	50	2013	2015	RP8C523	9692975	**246360062**
Fly 4T 2V 25-30Km-H	50	2012	2017	RP8C522	9692975	**246360062**
Fly 4T Motore Chn	50	2006	2007	C44500	9692975	**246360062**
Free Delivery	50	2000	2001	FCS2T	830293	**246360042**
Free FI	50	1995	2002	FCS2T	830293	**246360042**
Liberty	50	1997	2005	C1500	830293	**246360042**
Liberty 2T	50	2006	2006	C42100	58136R	**246360072**
Liberty 2T	50	2007	2008	C42500	58136R	**246360072**
Liberty 2T Rst	50	2004	2004	C42100	58136R	**246360072**
Liberty 2T Sport	50	2006	2006	C42106	58136R	**246360072**
Liberty 2T Sport	50	2007	2008	C42501	58136R	**246360072**
Liberty 4T	50	2000	2002	C2800	9692975	**246360062**
Liberty 4T	50	2005	2008	C42400	9692975	**246360062**
Liberty 4T Delivery - Single	50	2010	2014	C42401	9692975	**246360062**
Liberty 4T Delivery Tnt	50	2009	2009	C42401	9692975	**246360062**
Liberty 4T Ptt - Double - Nexive	50	2009	2017	C42402\C42404	9692975	**246360062**
Liberty 4T Ptt (Deu)	50	2007	2012	C42406	9692975	**246360062**
Liberty 4T Rst	50	2004	2004	C42200	9692975	**246360062**
Liberty 4T Sport	50	2006	2008	C42405	9692975	**246360062**
Liberty Moc 2T & Elle	50	2009	2013	C49100	58136R	**246360072**
Liberty Moc 4T & Elle	50	2009	2016	C49200	9692975	**246360062**
Liberty Ptt Eu2	50	2004	2005	C37401	58136R	**246360072**
Nrg	50	1994	1996	SAL1T	830293	**246360042**
Nrg Extreme	50	1999	2000		830293	**246360042**
Nrg Mc3	50	2001	2004	C320\210	830293	**246360042**
Nrg Power Dd	50	2005	2017	C45100	58136R	**246360072**
Nrg Power Dd Serie Speciale	50	2007	2012	C45100	58136R	**246360072**
Nrg Power Dt	50	2007	2015	C45300	58136R	**246360072**
Nrg Power Dt Serie Speciale	50	2007	2008	C45300	58136R	**246360072**
Nrg Rst Mc2	50	1996	1998	C04000	830293	**246360042**
Ntt	50	1995	1996	SAL1T	830293	**246360042**
Quartz	50	1992	1996	NSP1T	830293	**246360042**
Sfera	50	1991	1993	NSL1T	830293	**246360042**
Sfera Rst	50	1995	1997	C0100	830293	**246360042**
Typhoon	50	2001	2008	C29000	58136R	**246360072**
Typhoon	50	2009	2011	C48100	58136R	**246360072**
Typhoon 2T Euro2	50	2010	2016	LBMC501	58136R	**246360072**
Typhoon 2T Euro3 Ch	50	2011	2011	LBMC5	58136R	**246360072**
Vespa Et2	50	1997	2005	C1600	830293	**246360042**
Vespa Et2	50	1997	2005	C38100	58136R	**246360072**
Vespa Et4	50	2000	2005	C26100	9692975	**246360062**
Vespa Lx 2T	50	2005	2008	C38101	58136R	**246360072**
Vespa Lx 2T	50	2009	2013	C38101	58136R	**246360072**
Vespa Lx 2T Touring & 30Km	50	2010	2013	C38101	58136R	**246360072**
Vespa Lx 4T	50	2005	2009	C38300	9692975	**246360062**
Vespa Lxv 2T	50	2006	2009	C38102	58136R	**246360072**
Vespa Lxv 2T Navy	50	2008	2008	C38102	58136R	**246360072**
Vespa Primavera 2T	50	2013	2017	C53200	58136R	**246360072**
Vespa Primavera 4T 2V 25 Km/H	50	2014	2017	C53300	9692975	**246360062**
Vespa S 2T & College	50	2007	2012	C38103	58136R	**246360072**
Vespa Sprint 2T 2V	50	2014	2017	C53201	58136R	**246360072**
Zip	50	1992	1993	SSL1T	830293	**246360042**



VOLANI COMPLETI

COMPLETE MAGNETOS

Modello *Model*	**CC**	**Da** *From*	**A** *To*	**Telaio** *Frame*	**OEM**	**Codice RMS** *RMS Code*
Zip	50	1995	1996	SSP2T	830293	**246360042**
Zip 2T	50	2008	2013	C25E0	58136R	**246360072**
Zip 4T	50	2000	2005	C25000	9692975	**246360062**
Zip 4T	50	2006	2013	LBMC25C	9692975	**246360062**
Zip 4T 25Km-H	50	2006	2016		9692975	**246360062**
Zip Fast Raider Rst	50	1996	1997	C0700	830293	**246360042**
Zip Rst	50	1996	1999	C0600	830293	**246360042**
Zip Sp	50	1996	2000	C1100	830293	**246360042**
Zip Sp	50	2001	2004	C250004	58136R	**246360072**
Zip Sp Euro2	50	2006	2013	C25000	58136R	**246360072**
Skr City	80	1999	1999	SP81T	830293	**246360042**
Fly 4T	100	2006	2007	M53100	9692975	**246360062**
Fly 4T	100	2008	2014	M53100	9692975	**246360062**
Free	100	2002	2003	M2910	9692975	**246360062**
Zip 4T	100	2006	2010	M25200	9692975	**246360062**
Fly 4T 3V Ie E3 Dt	125	2013	2015		B018107	**246360912**
Fly 4T 3V Ie Euro3 Lem	125	2012	2013	RP8M791	B018107	**246360912**
Liberty 4T 2V Ie Ptt - Ita	125	2012	2013	M38900	643167+643166	**246360942**
Liberty 4T 3V Ie E3	125	2013	2014	M73400	B018107	**246360912**
Vespa Lx 4T 3V Ie - Touring	125	2012	2013		B018107	**246360912**
Vespa S 4T 3V Ie	125	2012	2012	MM68301	B018107	**246360912**
Liberty 4T 3V Lem	150	2013	2014	M73500	B018107	**246360912**
Vespa Lt 4T 3V Ie	150	2014	2014	RP8M66603	B018107	**246360912**
Vespa Lx 4T 3V Ie - Touring	150	2012	2013	M68400	B018107	**246360912**
Ape Mp P501-P601	220	1978	1996	MPR2-M2-V2	157715	**246351000**
Ape Tm	220	2009	2016	T10000	157715	**246351000**
Ape Tm P602	220	1982	1983	ATM1T	157715	**246351000**
Ape Tm P703 FI2	220	1999	2007	ATM2T\3T	157715	**246351000**
Ape Tm P703-P703V, FI2	220	1984	2005	ATM2T\T	157715	**246351000**
Beverly	250	2006	2007	M28500	58048R+58049R	**246360092**
Beverly Rst	250	2004	2005	M28500	58048R+58049R	**246360092**
X9 Evolution	250	2004	2004	M23000000	58048R+58049R	**246360092**
X9 Evolution	250	2006	2006	M23000	58048R+58049R	**246360092**
Beverly Euro 3	400	2006	2007	M34300	58080R+58040R	**246360112**
Beverly	500	2002	2004	M34100	58080R+58040R	**246360112**
Beverly	500	2005	2006	M34100	58080R+58040R	**246360112**
Beverly Euro 3	500	2006	2008	M34200	58080R+58040R	**246360112**
X9	500	2001	2002	M2700	58080R+58040R	**246360112**
X9 Evolution	500	2003	2005	M2700004	58080R+58040R	**246360112**
X9 Evolution	500	2006	2007	M27000	58080R+58040R	**246360112**
X9 Evolution Abs	500	2006	2007	M27000	58080R+58040R	**246360112**



246360042

GILERA - PIAGGIO: R.O. 830293



246360052

APRILIA - DERBI: R.O. 82852R



246360062

APRILIA - DERBI - PIAGGIO: R.O. 9692975



246360072

APRILIA - DERBI - GILERA - PIAGGIO: R.O. 58136R



246360092

DERBI - GILERA - PIAGGIO: R.O. 58048R - 58049R



246360112

APRILIA - GILERA - PIAGGIO: R.O. 58080R - 58040R



246360902

PEUGEOT: R.O. 768349



246360912

PIAGGIO: R.O. B018107



246360922

KYMCO: R.O. 00131155 - 00131154



246360932

KYMCO: R.O. 00131071 + 00131070



246360942

PIAGGIO: R.O. 643166 - 643167



246351000 NEW

PIAGGIO: R.O. 157715





121650073

TAPPO VOLANO | *FLYWHEEL CAP*

PIAGGIO 125-150-200: Vespa PX (Vari modelli - *Various models*) • Cosa CL-CLX
VNX-VLX-VSX-VNR-VLR-VSR
R.O. 226990



121830310

TAPPO GOMMA FERITOIA VOLANO | *FLYWHEEL SLOT RUBBER PLUG*

PIAGGIO 125: Vespa Primavera ET3 • Vespa PXE
R.O. 133652



121830320

TAPPO GOMMA FERITOIA VOLANO | *FLYWHEEL SLOT RUBBER PLUG*

PIAGGIO 50: Vespa 50 (Vari modelli - *Various models*)
R.O. 110162



121850210

DADO VOLANO M10 x 1,25 | *FLYWHEEL NUT M10 x 1,25*
Confezione 10 pz. | *10 Pcs Packing*

MOTORE MINARELLI 50
R.O. 74921000



121850270

DADO VOLANO FLANGIATO M10 x 1,25 | *FLYWHEEL NUT M10 x 1,25*
Confezione 10 pz. | *10 Pcs Packing*

APRILIA 50: Mojito Custom • Scarabeo 2T • Scarabeo 4T • Scarabeo Street • Sport City One • SR Motard • SR R
APRILIA 100: Scarabeo 4T
DERBI 50: Atlantis • Boulevard • GP1 • Sonar • Variant Sport
GILERA 50: Runner • Stalker • DNA • Ice
PIAGGIO 50: Fly • Diesis • Liberty 2T • Liberty 4T • NRG • Typhoon • Vespa ET2 • Vespa ET4 • Vespa LX • Vespa LXV • Vespa Primavera • Zip
PIAGGIO 100: Fly • Free • Zip
R.O. 289005



121850400

DADO VOLANO | *FLYWHEEL NUT*
Confezione 10 pz. | *10 Pcs Packing*

PIAGGIO 50: Vespa R • Vespa 50 Special • Vespa S
PIAGGIO 90: Vespa 90 78-83
PIAGGIO 125: Vespa Primavera
R.O. 001545



121850410

DADO VOLANO M12 x 1,25 - H10 | *FLYWHEEL NUT M12 x 1,25 - H10*
Confezione 10 pz. | *10 Pcs Packing*

APRILIA 125-250-300: Atlantic • Mojito • Scarabeo • Sport City • SR Motard • SR Max
DERBI 125-150-250-300: Boulevard • GP1 • Rambla • Sonar • Variant Sport
GILERA 125-200-250-300: DNA • Nexus • Runner • Runner VX-VXR • Runner FX-FXR
PIAGGIO 125-150-250-300: Beverly • Fly • Liberty • MP3 • Vespa ET4 • Vespa Granturismo • Vespa GTS • Vespa GTV • Vespa LX • X7 • X8 • X9 • X10
R.O. 486324



121858430

CHIAVETTA VOLANO | *FLYWHEEL KEY*
Confezione 50 pz. | *50 Pcs Packing*
12,6x5x3 mm

APRILIA-DERBI-GILERA-PIAGGIO (Vari modelli - *Various models*)
R.O. 000267



142740080

VENTOLA VOLANO MODIFICATA | *MODIFIED FLYWHEEL FAN*
Migliora il raffreddamento | *Improve engine cooling*
Cilindro verticale | *Vertical cylinder*

MOTORI MINARELLI - YAMAHA - MBK 50





246170010

GILERA 50: DNA 00-02 • Runner 97-00 • Stalker 97-04 • Typhoon X 99-99 • Typhoon XR 00 • Typhoon 94-97
R.O. 498865
PIAGGIO 50: Diesis 01 • Free FL 95-02 • Liberty 97-05 • NRG 94-96 • Vespa ET2 97-05 • Zip 92-93 • Zip 00-04 • Zip RST 96-99 • Zip SP 96-00
R.O. 498865



246170023

PIAGGIO 50: Ape FL-FL2-FL3 Europa • Ape TM P • Vespa FL-FL2 • Vespa PK • Vespa PK XL
PIAGGIO 125: Cosa • Cosa 2 • Vespa PK • Vespa PX • Vespa PX T5 • Vespa PXE Arcobaleno
R.O. 196549



APRILIA

246050010

50: Amico 94-98 • Amico GL-GLE 93-95 • Amico LX-Sport-Cat 92-93
R.O. 8212336



246050020

Kit 3 pezzi | *Key set 3 pcs*

50: Rally 95-03 • Rally LC 96-99 • Sr 93-96 • SR LC 94-96 • SR Stealth, Racing 97-99 • SR WWW 97-01
R.O. 8201845



246050030

Kit 3 pezzi | *Key set 3 pcs*

50: Scarabeo 93-05 • Scarabeo Street 05-06 • Scarabeo Street 2T RST 06-09
R.O. 8201846



246050351

Kit 3 pezzi | *Key set 3 pcs*

125: Leonardo 99-01 • Leonardo ST 01-04
R.O. 8102923



246050370

Kit 2 pezzi | *Key set 2 pcs*

125: Scarabeo Motore Rotax 99-03 • Scarabeo 03
R.O. 8102841



246050420

50: Scarabeo 93-05
125: Classic 95-99
R.O. AP8201793



246050521

246050522

Kit 3 pezzi | *Key set 3 pcs*

125: Sport City 04-06 • Sport City Eu3 06-08 • Sport City Cube 08-10
125-200: Sport City 04-06
250: Sport City Cube 08-10
R.O. AP8104726



246050531

Kit 3 pezzi | *Key set 3 pcs*

250: Leonardo 99-01 • Leonardo 02-04 • Leonardo ST 01 • Leonardo 99-01
R.O. AP8102877



246050601

Kit 3 pezzi | *Key set 3 pcs*

50: Scarabeo 2T Net 09 • Scarabeo 2T Eu2 Motore Piaggio 10-12
R.O. AP8202452





246050611

50: Scarabeo 2T Net 09 • Scarabeo 2T Eu2 • Motore Piaggio 10-12
R.O. 860579



246050621

Kit 3 pezzi | *Key set 3 pcs*

50: Scarabeo 4T Restyling Eu3 06-09 • Scarabeo 4T-4V 09-12
100: Scarabeo 4T Restyling 06-09 • Scarabeo 4T 10-12
R.O. 85180R



246050641

Kit 3 pezzi | *Key set 3 pcs*

50: SR R Factory Carburatore 10-12 • SR R, R Factory 04-09
R.O. AP8202419



246050650

Kit 3 pezzi | *Key set 3 pcs*

50: SR Ditech Eu2 02-04 • SR H2O Ditech e Carburatore 00-04 • SR Street Iniezione 03-12
R.O. AP8202218-AP8202386



HONDA

246050070

Kit 2 pezzi | *Key set 2 pcs*

50: Sky 97
R.O. 35010-GCG-930



246050081

Kit 3 pezzi | *Key set 3 pcs*

50: SH 96
100: SH 96-99
R.O. 35010-GBY-910



246050340

Kit 2 pezzi | *Key set 2 pcs*

50: SH 91-95
R.O. 35010-GJ3-930





QUADRI CHIAVE

KEY SETS MAIN SWITCHES

246050380

Kit 4 pezzi | *Key set 4 pcs*

125-150: Pantheon 2T 98-02
250: Foresight
R.O. 35010-KEY-900 - 35010-KFG-860



246050390

246050392

Kit 3 pezzi | *Key set 3 pcs*

125-150: Chiocciola 00-06 • NES 00-07
R.O. 35010-KGF-900



246050401

Kit 3 pezzi | *Key set 3 pcs*

125-150: SH 01-08
R.O. 35010-KPR-900



246050471

Kit 2 pezzi | *Key set 2 pcs*

125-150: SH i 01-08
R.O. 35010-KTF-640



246050541

Kit 3 pezzi | *Key set 3 pcs*
Bauletto Anteriore | *Front Trunk*

125-150: SH 01-08





KYMCO

246050210

Kit 3 pezzi | *Key set 3 pcs*

50: Dj W 94-00 • Dj X 91-92 • Dj Y 93
R.O. 00169007



246050490

Kit 3 pezzi | *Key set 3 pcs*

50: People 04 • People 99-00 • People Eu2 03
125: People 99-00 • People Eu2 03
R.O. 00169307



246050630

Kit 4 pezzi | *Key set 4 pcs*

50-125-150-200: Agility R16 09-12
R.O. 00135071



246050720

Kit 2 pezzi | *Key set 2 pcs*

50: Dink Classic Eu2 03 • Dink LC 98-02
125: Dink 97-98 • Dink Classic 02 • Dink Classic Eu2 03 • Dink LX 98-00
200: Dink Classic 04
R.O. 00168927



MALAGUTI

246050090

50: Centro Base 93-94 • Centro SL 94-98 • Centro SL Kat 99-00 • F10 AC 08-09 • F10 Jet Line 92-98 • F10 Kat 99-00 • F10 RST 01-06
R.O. 09002500



246050100

50: Crosser CR1 95-98 • F12 AC • F12 LC RST • F12 Phantom 94-00 • F12 Phantom Lc 94-00 • F12 Phantom LC RST 01-04 • F12 Phantom LC Twin Disks 98 • F12 Phantom RST 01-04 • F15 Fire Fox AC 05-06
100: F12 Phantom 99-00
R.O. 09003100



246050310

Kit 3 pezzi | *Key set 3 pcs*

50: Centro Base 93-94 • Centro SL 94-98 • Centro SL Kat 99-00 • F10 AC 08-09 • F10 Jet Line 92-98 • F10 Kat 99-00 • F10 RST 01-06
R.O. 09002600





QUADRI CHIAVE

KEY SETS MAIN SWITCHES

246050321

Kit 3 pezzi | *Key set 3 pcs*

50: F12 AC RST Eu2 06 • F12 LC RST Eu2 06 • F12 Phantom 94-00 • F12 Phantom LC 94-00 • F12 Phantom LC RST 01-04 • F12 Phantom LC Twin Disks 98 • F12 Phantom RST Eu1 01-04
100: F12 Phantom 99-00
R.O. 09002800



246050330

Kit 3 pezzi | *Key set 3 pcs*

50: F15 Fire Fox 96-03 • F15 Fire Fox AC 05-06 • F15 Fire Fox RST 03-04 • F15 Fire Fox Twin Disks & Special 98-00 • F15 LC RST 04-05 • F15 LC-TDS RST Eu1 01
125-150: F18 Warrior 00-02
R.O. 09003500



246050430

Kit 3 pezzi | *Key set 3 pcs*

50: Ciak 99-00 • Ciak Master 04-06 • Ciak Mono 03 • Ciak TD 00-01
100: Ciak 99-00
125-150-200: Ciak 00-01 • Ciak Master 04-06 • Ciak RST Eu2 03
R.O. 09005100



246050571

Kit 3 pezzi | *Key set 3 pcs*

50: Centro 4T 08 • Centro SL 4T 10
125-160: Centro ie 08-09 • Centro SL Le 09
R.O. 09008400



MBK

246050130

Kit 2 pezzi | *Key set 2 pcs*

50: Booster NG 95-02 • Booster Rocket 97-98 • Booster Track 96-98
R.O. 4SBH20210200



246050141

Kit 2 pezzi | *Key set 2 pcs*

50: Booster 90-94 • Booster 01-02 • Booster Road Ita 94-95 • Booster Spirit 96-02 • Stunt 00-02 • Slider 00-02
R.O. 3VLH250100 - 5JHH20210000



246050150

50: Ovetto Che-Ita 97-01
R.O. 5ADH25010100





246050161

Kit 2 pezzi | *Key set 2 pcs*

50: Nitro 97-02
R.O. 5BRH20210000



246050271

Kit 2 pezzi | *Key set 2 pcs*

50: Ovetto Che-Ita 97-01
R.O. 5ADH250100



246050280

246050282

Kit 4 pezzi | *Key set 4 pcs*

50: Nitro 97-02
R.O. 5BRH20210100



246050290

Kit 3 pezzi | *Key set 3 pcs*

50: Flipper 98-02
R.O. 5EUH20210000



246050360

Kit 2 pezzi | *Key set 2 pcs*

125: Skyliner 98-00
150: Skyliner 00
R.O. 5DSS25010100



246050460

50: Mach G 02-04 • Ovetto 02-04
100: Ovetto 00-02
R.O. 5KKH25010000



246050581

50: Booster 04
R.O. 5WWH25010000



246050591

Kit 4 pezzi | *Key set 4 pcs*

50: Aerox Jaguar 04 • Aerox 03-04
R.O. 5WJH20211000



PEUGEOT

246050170

246050171

Kit 2 pezzi | *Key set 2 pcs*

50: Buxy 94-97 • Fox 94-98 • Speedake 95-97 • Zenith L 94-96 • Zenith LN-LS 97-98 • Zenith N 97-98
R.O. 752727



246050180

Kit 2 pezzi | *Key set 2 pcs*

50: Speedfight LC 97-98 • Speedfight AC 97-98
100: Trekker 98
R.O. 752849



246050510

246050511

Senza immobilizer | *Without immobilizer*

50: Speedfight 2° Serie AC-LC



246050760

50-125-150: Tweet 10-14
R.O. 803468



PIAGGIO

246050230

PIAGGIO: Vespa ET3 • Vespa PX • Vespa PE
R.O. 160743





SYM

246050760

50: Jet 4 09-10 • Symphony S 09-10
125: Symphony S 09-12 • Symphony SR 09-10
150: Symphony S 09-12 • Symphony SR 09-10
R.O. 35010APA000



YAMAHA

246050130

Kit 2 pezzi | *Key set 2 pcs*

50: BW'S Bump 97-98 • BW'S Next Generation 97-02 • BW'S Next Generation Cat. 99-00 • Spy 95-98
R.O. 4SBH20210200



246050141

Kit 2 pezzi | *Key set 2 pcs*

50: BW'S Original 97-02 • BW'S Original Eu2 02 • BW'S R 01 • Slider 00-02
R.O. 3VLH250100 - 5JHH20210000



246050150

50: Neo'S 97-01
R.O. 5ADH25010100





QUADRI CHIAVE

KEY SETS MAIN SWITCHES

246050161

Kit 2 pezzi | *Key set 2 pcs*

50: Aerox 97-98 • Aerox 01-02 • Aerox R 99-00
R.O. 5BRH20210000



246050271

Kit 2 pezzi | *Key set 2 pcs*

50: Neo'S 97-01
R.O. 5ADH250100



246050280

246050282

Kit 4 pezzi | *Key set 4 pcs*

50: Aerox 97-98 • Aerox 01-02 • Aerox R 99-00
R.O. 5BRH20210100



246050290

Kit 3 pezzi | *Key set 3 pcs*

50: Why 98 • Why 01-02 • Why Eu1 99-00
R.O. 5EUH202100



246050360

Kit 2 pezzi | *Key set 2 pcs*

125: Majesty 98-00
150: Majesty 00
R.O. 5DSS25010100



246050460

50: Jog R 02 • Jog R 06-10 • Jog R Eu2 02-05 • Neo'S 02-06
100: Neo'S 99-02
R.O. 5KKH25010000



246050581

50: BW'S 04-11 • BW'S Naked 04-11 • BW'S 04
R.O. 5WWH25010000



246050591

50: Nitro Jaguar 04 • Nitro 03-04
R.O. 5WJH20211000





246050660

PIAGGIO 50: Vespa ET2 Iniezione 97-00
PIAGGIO 125: Vespa ET4 96-98
R.O. 298687



246050670

PIAGGIO 50: Ape 09 • Ape RST Mix 99-03 • Ape Mix 2T 98-08 • Ape FL3 Europa 96-99 • Ape FL-FL2 89-95
R.O. 291582



246050693

PIAGGIO 50-125-150-200: Vespa Px • Vespa PK • Vespa PK XL • Vespa PK XL Rush • Vespa PX • Vespa PX T5 • Vespa PXE Arcobaleno
R.O. 178593



246050730

PIAGGIO 220: Ape Car P2-P3 78-85 • Ape MP P501-P601 78-96 • Ape TM P602 82-83 • Ape TM P703-P703V-FL2 84-05
PIAGGIO 420: Ape Car-Max Diesel 86-96 • Ape TM P703-P703V Diesel 87-04
R.O. 140732



246050680

APRILIA 50-125: SR Motard • Sport City One
DERBI 50-125-150-200: Boulevard • Sonar • Variant Sport
GILERA 50-125-180-200: Runner Purejet • Runner SP • Runner VX-VXR
PIAGGIO 50: Fly • Liberty 2T • Liberty 4T • NRG Power • NRG Purejet • Vespa ET2 • Vespa LX • Vespa LXV • Vespa Primavera • Vespa Sprint • Zip
PIAGGIO 125-150: Fly • Hexagon • Liberty • Vespa 946 • Vespa LX • Vespa LXV • Vespa S • X7 • X9 • Zip
PIAGGIO 200-250: Liberty • X9 • Hexagon • X7
PIAGGIO 500: X9
R.O. 643133



246050700

3 Pz | *3 Pcs*
APRILIA 50-125: SR Motard • Sport City One
DERBI 50-125-150-200: Boulevard • Sonar • Variant Sport
GILERA 50-125-180-200: Runner Purejet • Runner SP • Runner VX-VXR
PIAGGIO 50: Fly • Liberty 2T • Liberty 4T • NRG Power • NRG Purejet • Vespa ET2 • Vespa LX • Vespa LXV • Vespa Primavera • Vespa Sprint • Zip
PIAGGIO 125-150: Fly • Hexagon • Liberty • Vespa 946 • Vespa LX • Vespa LXV • Vespa S • X7 • X9 • Zip
PIAGGIO 200-250: Liberty • X9 • Hexagon • X7
PIAGGIO 500: X9
R.O. 643133





COMMUTATORI ACCENSIONE

IGNITION SWITCHES

246050710

PIAGGIO 50: NRG Extreme 99-00 • NRG Mc3 01-04 • NRG Purejet 02-04 • Typhoon 01-11 • Zip RST 96-99
R.O. 580639



246050740

5 Posizioni | *5 Positions*

PIAGGIO 160: Vespa GS 63-64
VSB1
R.O. 70113



246050750

PIAGGIO 150: Vespa GS 59-61
PIAGGIO 160: Vespa GS 62-64
VSB1-VS5
R.O. 92962





IMPIANTI ELETTRICI VESPA - *VESPA CABLE HARNESS*



	Codice RMS *RMS Code*	Descrizione *Description*	OEM	Codice a Barre *Barcode*
	246490041	Impianto Elettrico Vespa 125 Modello 1955 | *Vespa Cable Harness 125 Model 1955*	022681	
	246490051	Impianto Elettrico Vespa 125 | *Vespa Cable Harness 125*	091462	
	246490060	Impianto Elettrico Vespa 50 | *Vespa Cable Harness 50*	102462	
	246490070	Impianto Elettrico Vespa 180 Rally-Gtr 125-Sprint Vel.150 | *Vespa Cable Harness 180 Rally-Gtr 125-Sprint Vel.150*	114309	
	246490080	Impianto Elettrico Vespa 50 Special | *Vespa Cable Harness 50 Special*	142965	
NEW	**246490090**	Impianto Elettrico Vespa 90-125 Primavera | *Vespa Cable Harness 90-125 Primavera*	144505	
	246490101	Impianto Elettrico Vespa 125 ET3 | *Vespa Cable Harness 125 ET3*	149247	
	246490110	Impianto Elettrico Vespa Px 2 Serie - (Con frecce) | *Vespa Cable Harness Px 2nd Series - (With flashers)*	243566	
	246490121	Impianto Elettrico Vespa GL 150 | *Vespa Cable Harness GL 150*	090388	
NEW	**246490140**	Impianto Elettrico Vespa Pk 50 S V5X2T | *Vespa Cable Harness Pk 50 S V5X2T*	243203	
	246490150	Impianto Elettrico Vespa Px 125-150-200 - (Senza avviamento elettrico) | *Vespa Cable Harness Px 125-150-200 - (No electric starter)*	217897	
	246490161	Impianto Elettrico Vespa Px 125-150-200 - (Con avviamento elettrico) | *Vespa Cable Harness Px 125-150-200 - (With electric starter)*	242182	
	246490171	Impianto Elettrico Vespa 125 V30T-V33T-VM1T-VU1T | *Vespa Cable Harness 125 V30T-V33T-VM1T-VU1T*	018201	
NEW	**246490180**	Impianto Elettrico Vespa 150 VBB1 | *Vespa Cable Harness 150 VBB1*	057126	
	246490191	Impianto Elettrico Vespa Gs 160 VSB1 | *Vespa Cable Harness Gs 160 VSB1*	070124	
	246490210	Impianto Elettrico Vespa 150 VLA1T | *Vespa Cable Harness 150 VLA1T*	070651	
	246490221	Impianto Elettrico Vespa 150 VL2/3-VB1 | *Vespa Cable Harness 150 VL2/3-VB1*	81300	
	246490230	Impianto Elettrico Vespa 125 VNA1/2T | *Vespa Cable Harness 125 VNA1/2T*	081021	
	246490241	Impianto Elettrico Vespa 150 VBA1 | *Vespa Cable Harness 150 VBA1*	084354001	
	246490251	Impianto Elettrico Vespa 160 VSB1 | *Vespa Cable Harness 160 VSB1*	093736	
	246490261	Impianto Elettrico Vespa 125 VNB2/3/4 | *Vespa Cable Harness 125 VNB2/3/4*	093489	
	246490271	Impianto Elettrico Vespa Px 125-150-200 1° serie - (Senza frecce) | *Vespa Cable Harness Px 125-150-200 1° series - (Without blinkers)*	162064	
	246490291	Impianto Elettrico Vespa 150 Ss 180 VBB2-VSC1 | *Vespa Cable Harness 150 Ss 180 VBB2-VSC1*	098253	
NEW	**246490301**	Impianto Elettrico Vespa Ss 180 VSC1 | *Vespa Cable Harness Ss 180 VSC1*	098235001	
	246490302	Impianto Elettrico Vespa Gs 150 58-61 VS4T VS5T | *Vespa Cable Harness Gs 150 58-61 VS4T VS5T*	084612	
	246490303	Impianto Elettrico Vespa 150 VBB 1961 | *Vespa Cable Harness 150 VBB 1961*	086844	
	246490304	Impianto Elettrico Vespa 50 1° serie 63-65 | *Vespa Cable Harness 50 1° serie 63-65*	-	
	246490305	Impianto Elettrico Vespa 125 VNB1T 59-61 | *Vespa Cable Harness 125 VNB1T 59-61*	087212	

246330330

CONFEZIONE 5 GUAINE TERMORETRAIBILI VARIE MISURE
| *PACK OF 5 HEAT SHRINKABLE TUBE IN DIFFERENT MEASURES*



246490200

GUAINA CABLAGGIO | *ELECTRIC SHEATH*
Vari Modelli Vespa | *Various Vespa Models*

PIAGGIO: Vespa
R.O. 610076M



246490201

GUAINA CABLAGGIO VESPA - VERDE | *ELECTRIC SHEATH VESPA - GREEN*
Vari Modelli Vespa | *Various Vespa Models*
Lunghezza 3210 mm | *Length 3210 mm*

PIAGGIO: Vespa





246190010

Senza staffa | *Without bracket*

PIAGGIO 50: Vespa SS • Vespa R • Vespa 50 Special
V5A1T-V5B1T-V5B3T
R.O. 078937



246190020

Con staffa | *With bracket*

PIAGGIO 50: Vespa 50 • Ape P
PIAGGIO 90: Vespa 90 • Vespa SS
PIAGGIO 125: Vespa Nuova 65 • Vespa Primavera
V5A1T-VMA
R.O. 079697



246190030

PIAGGIO 125-150: Vespa PX
R.O. 182343



246190040

PIAGGIO 550-600: Ape MP • Ape MPV
R.O. 123828



246190050

PIAGGIO 50: Si • Bravo • Ciao • Boxer • Grillo
R.O. 102939



246190060

2 Fili | *2 Wires*
PIAGGIO 150: Vespa Sprint • Vespa Super
R.O. 155973



246190070

PIAGGIO: Vespino Spagna



246190080

PIAGGIO 125: Vespa 125 55-56
PIAGGIO 150: Vespa GS 56-61
R.O. 018941



246190090

2 Fili | *2 Wires*
PIAGGIO 125-150: Vespa Super
R.O. 133052





CONDENSATORI

CONDENSATORS

246190110

INNOCENTI 125-150-200: Lambretta Li



246190120

APRILIA
HUSQVARNA
ITALJET
ZUNDAPP



246190130

CONDENSATORI ZK100 | *ZK100 CONDENCER*



246190150

CONDENSATORI ZK213 | *ZK213 CONDENCER*



246190160

CONDENSATORI ZK235 | *ZK235 CONDENCER*





246330180

PORTA CONNETTORI ELETTRICI "SUPERSEAL" | *ELECTRICAL HOLD CONNECTORS "SUPERSEAL"*
- 2 Vie (3 pz.) | *2 Pins (3 pcs)*
- 3 Vie (3 pz) | *3 Pins (3 pcs)*
- 4 Vie (3 pz) | *4 Pins (3 pcs)*
- Connettori e gommini inclusi | *Connectors and seals included*



246330190

PORTA CONNETTORI ELETTRICI "MINITIMER" | *ELECTRICAL HOLD CONNECTORS "MINITIMER"*
- (3 pz.) | *(3 pcs)*
- Connettori e gommini inclusi | *Connectors and seals included*



246330200

PORTA CONNETTORI ELETTRICI "090" | *ELECTRICAL HOLD CONNECTORS "090"*
- 2 Vie (1 pz) | *2 Pins (1 pc)*
- 3 Vie (1 pz) | *3 Pins (1 pc)*
- 4 Vie (1 pz) | *4 Pins (1 pc)*
- 6 Vie (1 pz) | *6 Pins (1 pc)*
- Connettori e gommini inclusi | *Connectors and seals included*



246330210

PORTA CONNETTORI ELETTRICI "BOSCH" | *ELECTRICAL HOLD CONNECTORS "BOSCH"*
- (3 pz.) | *(3 pcs)*
- Connettori e gommini inclusi | *Connectors and seals included*



246330220

PORTA CONNETTORI ELETTRICI 6,3 mm | *ELECTRICAL HOLD CONNECTORS 6,3 mm*
- 2 Vie (3 pz.) | *2 Pins (3 pcs)*
- 3 Vie (3 pz) | *3 Pins (3 pcs)*
- 4 Vie (3 pz.) | *4 Pins (3 pcs)*
- 6 Vie (3 pz.) | *6 Pins (3 pcs)*
- 9 Vie (3 pz.) | *9 Pins (3 pcs)*
- Connettori inclusi | *Connectors included*



246330230

PORTA CONNETTORI ELETTRICI 110 ml | *ELECTRICAL HOLD CONNECTORS 110 ml*
- 2 Vie (3 pz.) | *2 Pins (3 pcs)*
- 3 Vie (3 pz) | *3 Pins (3 pcs)*
- 4 Vie (3 pz.) | *4 Pins (3 pcs)*
- 6 Vie (3 pz.) | *6 Pins (3 pcs)*
- 9 Vie (3 pz.) | *9 Pins (3 pcs)*
- Connettori inclusi | *Connectors included*





CONNETTORI

ELECTRICAL CONNECTORS

246330240

FASTON FEMMINA 6,3 mm | *FEMALE FASTON 6,3 mm*
Confezione 100 pz. | *100 Pcs Packing*



246330250

COPRI FASTON MASCHIO 6,3 mm | *MALE FASTON COVER 6,3 mm*
Confezione 100 pz. | *100 Pcs Packing*



246330260

COPRI FASTON FEMMINA 6,3 mm | *FEMALE FASTON COVER 6,3 mm*
Confezione 100 pz. | *100 Pcs Packing*



246330270

FASTON MASCHIO 6,3 mm | *MALE FASTON 6,3 mm*
Confezione 100 pz. | *100 Pcs Packing*



246330280

OCCHIELLI 6,3 mm | *ROUND CONNECTOR 6,3 mm*
Confezione 100 pz. | *100 Pcs Packing*



246330290

FASTON CILINDRICI MASCHIO | *CYLINDRICAL MALE FASTON*
Confezione 100 pz. | *100 Pcs Packing*



246330300

FASTON CILINDRICI FEMMINA | *CYLINDRICAL FEMALE FASTON*
Confezione 100 pz. | *100 Pcs Packing*



246330310

CONNETTORI PREISOLATI (7 Tipi) | *PLASTIC COATED CONNECTORS (7 Types)*
Confezione 35 pz. | *35 Pcs Packing*



246330320

OCCHIELLI Ø6 mm | *Ø6 mm ROUND CONNECTORS* (3 Tipi) | *(3 Types)*
1,5 - 6 - 10 mm^2
Confezione 75 pz. | *75 Pcs Packing*





246330340

SERIE RUBACORRENTE (5 Tipi) | *CABLE CLAMPS (5 Types)*
Confezione 15 pz. | *15 Pcs Packing*





246150010

PIAGGIO 50: Ciao • Bravo • Boxer • Si
R.O. 103133



246150020

PIAGGIO 50: Vespa 50 • Vespa 50 Special • Vespa R • Vespa S
R.O. 101761



246150030

PIAGGIO 50: Ape 50
PIAGGIO 90: Vespa 90
PIAGGIO 125: Vespa Primavera • Vespa Primavera ET3
PIAGGIO 250: Ape 250 70-74
R.O. 141838



246150040

PIAGGIO 550: Ape MP
PIAGGIO 600: Ape MP
R.O. 118540



246150050

PIAGGIO 150: Vespa Sprint • Vespa Super 71
R.O. 129434



246150060

Impianti con bobina | *Models with coil*
PIAGGIO 150: Vespa PX 1° serie • Vespa Sprint • Vespa Super >74
R.O. 140963





246150070

Modello con frecce | *Model with flashers*

PIAGGIO 125-150: Vespa PX
R.O. 134117-182342



246150080

PIAGGIO 125: Vespa 125 • Vespa GT
PIAGGIO 150: Vespa GL
VNB4T-VNB5T-VNS4-VNL1T-VLA1T
R.O. 97478



246150090

PIAGGIO 180: Vespa Rally 68-72 • Vespa Super Sport 65
VSC1-VSD1
R.O. 111300



246150100

PIAGGIO: Vespino Spagna



246150120

PIAGGIO 98-125: Vespa
R.O. 610075M



246150130

PIAGGIO 150: Vespa GS
R.O. 097477





CONTATTI

PLATINERS

246150140

EFFE

INNOCENTI 125-150-200: Lambretta Li - DL



246150110 NEW

EFFE

INNOCENTI 125: Lambretta Li



246150220 NEW

EFFE

ATALA: Califfone 80-122
MOTO MORINI: Corsarino 50 4T 70-76
FANTIC MOTOR: Cabballero 75>
INNOCENTI: Lambretta Li Furgone 175 62>
GILERA: 50-80
CIMATTI: Gringo 80> • 86 78>



246150150

BERU

CONTATTI KS436 | *KS436 CONTACT BREAKER*



246150160

BERU

CONTATTI KS458 | *KS458 CONTACT BREAKER*



246150170

BERU

CONTATTI KS465 | *KS465 CONTACT BREAKER*





246150180

BERU

CONTATTI KS466 | *KS466 CONTACT BREAKER*



246150190

BERU

CONTATTI KS469 | *KS436 CONTACT BREAKER*



246150200

BERU

CONTATTI KS710 | *KS710 CONTACT BREAKER*



246150210

BERU

CONTATTI KS183 | *KS183 CONTACT BREAKER*





PRESE DI CORRENTE

SOCKETS

246490020

PRESA BASSA TENSIONE | *L.T. SOCKET ASSY*

PIAGGIO 50-90: Vespa 50 • Vespa L • Vespa R • Vespa S • Vespa 90 • Ape 50 (TL1-TL2)
PIAGGIO 125: Vespa Primavera >67 • Vespa Primavera ET3
R.O. 070744



246490030

PRESA BASSA TENSIONE | *L.T. SOCKET ASSY*

PIAGGIO 125: Vespa 125 • Vespa Super • Vespa GTR
PIAGGIO 150: Vespa GL • Vespa Sprint Veloce
PIAGGIO 180-200: Vespa Rally
R.O. 120811



246490133

PRESA DI CORRENTE | *L.T. SOCKET ASSY*

PIAGGIO 125-150: Vespa PX • Vespa PX T5
VNX2-VLX2-VSX2-VNX5T
R.O. 178895



246490280

PRESA BASSA TENSIONE | *L.T. SOCKET ASSY*

PIAGGIO: Vespa ET3
VMB1
R.O. 185458



246490310

PRESA DI CORRENTE | *SOCKET ASSY*

PIAGGIO 125: Vespa GTR
PIAGGIO 150: Vespa Sprint Veloce • Vespa Super
PIAGGIO 200: Vespa Rally
R.O. 149082



246490320

PRESA DI CORRENTE | *SOCKET ASSY*
Modello con frecce | *Blinkers Model*

PIAGGIO 125-150-200: Vespa PX
VNX-VLX-VSX
R.O. 163603



246490330

PRESA DI CORRENTE | *SOCKET ASSY*

PIAGGIO 125-150-200: Vespa PXE
VNX-VLX-VSX
R.O. 163476



121830620

CAPPUCCIO PRESA CORRENTE | *RUBBER SOCKET*

PIAGGIO 50-90-125: Vespa Primavera ET3
V5A1-V5A2T-V5B1T-V9A1-VMB1
R.O. 161125



BATTERIE
BATTERIES
BATERIAS
BATTERIES

Batteries à Lithium	*Baterias de Litio*	*Lithium Batteries*	**BATTERIE AL LITIO**	**732**
Batteries Pré-chargées	*Baterias Precargadas*	*Precharged Batteries*	**BATTERIE PRECARICATE**	**739**
Batteries au Plomb-Acide	*Baterias De Plomo*	*Lead Acid Batteries*	**BATTERIE AL PIOMBO ACIDO**	**742**
Accessoires Batteries	*Accesorios Baterias*	*Batteries Accessories*	**ACCESSORI BATTERIE**	**746**
Chargeurs des Batteries	*Cargadores de Baterias*	*Battery Chargers*	**CARICABATTERIE**	**747**
Testeurs de Batterie	*Tester de Baterias*	*Battery Testers*	**TESTER BATTERIE**	**749**
Démarreurs de Batterie	*Arrancadores de Baterias*	*Jump Starters*	**JUMP STARTER**	**750**

BATTERIE AL LITIO

LITHIUM BATTERIES





Skyrich è leader mondiale nella produzione di batterie al litio di altissima qualità. Compatibili con la maggior parte delle moto e degli scooter presenti sul mercato, sono contraddistinte per l'elevata performance e durata di vita.
A riprova dell'altissima qualità dei prodotti, Skyrich è il fornitore OEM delle principali case costruttrici, quali KTM, HUSQVARNA, DUCATI, KAWASAKI, APRILIA e MV AUGUSTA.

Skyrich is a leading brand in the production of high quality lithium batteries. Compatible with most of the motorcycles and scooters on the market, they are characterized for their high performance and lifespan.

As evidence of the very high quality of the products, Skyrich is the OEM supplier of the main manufacturers, such as KTM, HUSQVARNA, DUCATI, KAWASAKI, APRILIA and MV AUGUSTA.

PERCHÉ SCEGLIERE LE BATTERIE AL LITIO SKYRICH

PESO MINORE: meno 1/3 delle normali batterie al piombo NESSUN INQUINAMENTO: non contengono acidi e metalli pesanti come il piombo, il cadmio, il mercurio NESSUNA FUORIUSCITA DI LIQUIDI: all'interno del case non è presente acido MASSIMA POTENZA DI SPUNTO ALL'AVVIAMENTO: corrente di spunto superiore LUNGA VITA DELLE BATTERIE: resiste a più di 2000 cicli LUNGO MANTENIMENTO DELLA CARICA IN MAGAZZINO: più di 1 anno (batteria al piombo 6 mesi) RISPARIMIO DI ENERGIA: tensione di scarica stabile e bassa resistenza interna.

WHY CHOOSE SKYRICH LITHIUM BATTERIES

LOWER WEIGHT: less than 1/3 of normal lead batteries NO POLLUTION: they do not contain acids and heavy metals such as lead, cadmium, quicksilver NO LIQUID SPILL: there is no acid inside the case MAXIMUM POWER OF START TO START: higher starting current LONG LIFE OF BATTERIES: withstands more than 2000 cycles LONG MAINTENANCE OF THE CHARGE IN THE WAREHOUSE: more than 1 year (6 months lead battery) ENERGY SAVING: stable discharge voltage and low internal resistance.

Modello *Model*		Sostituisce *Replace*	Dimensioni Poli *Terminal Dimensions* (mm)	Peso *Weight* (Kg)	Corrente Di Carica *Charge Current* (Amp)		Spunto *Cranking* (Ccamp) *Tested By Argus (Aa500p)*	Codice a barre *Barcode*
					Std	Max		
HJTZ5S-FP 246642000 	NEW	YTZ5S YTX4L-BS YTX5L-BS	113x70x85	0,5	1	10	120	
HJTZ7S-FP 246642010 	NEW	YTZ7S YTX7L-BS	113x70x85	0,6	1	12	144	
HJTZ10S-FP 246642020 	NEW	YTZ10S	150x87x93	0,9	2	20	240	
HJTZ14S-FP 246642030 	NEW	YTZ12S YTZ14S	150x87x93	1,1	2,5	22	300	
HJT9B-FB 246642040 	NEW	YT7B-BS YT9B-BS	150x65x92	0,7	1,5	15	180	
HJT12B-FB 246642050 	NEW	YT12B-BS YT14B-BS YB16AL-A2	150x65x130	0,9	2,5	22	300	
HJTX5L-FP 246642060 	NEW	YTX4L-BS YTX5L-BS	113x70x85	0,4	0,8	8	96	

BATTERIE AL LITIO

LITHIUM BATTERIES

Modello *Model*		**Sostituisce** *Replace*	**Dimensioni Poli** *Terminal Dimensions* **(mm)**	**Peso** *Weight* **(Kg)**	**Corrente Di Carica** *Charge Current* **(Amp)**		**Spunto** *Cranking* **(Ccamp)** *Tested By Argus (Aa500p)*	**Codice a barre** *Barcode*
					Std	**Max**		
HJTX7A-FP **246642070** 	NEW	YTX7A-BS	150x87x93	0,6	1	10	120	
HJTX9-FP **246642080** 	NEW	YTX9-BS YTR9-BS	150x87x105	0,7	1,5	15	180	
HJTX14H-FP **246642090** 	NEW	YTX14H-BS KMX14-BS YTX14-BS YTX12-BS YTX12A-BS YB12B-B2	150x87x93	1,1	2	20	240	
HJTX14AHQ-FP **246642100** 	NEW	YTX14AH-BS YB14-A2 YB14A-A1 YB14A-A2 YB14-B2 YTX14AHL-BS YTX14LBS YB14L-A1 YB14L-A2 YB14L-B2 SYB14L-A2 SYB14L-B2 12N14-3A YB10A-A2 YB12A-A YB12A-B YB12C-A 12N12A-4A-1 YB10L-A2 YB10L-B YB10L-B2 YB10L-BP YB12AL-A YB12AL-A2 12N10-3A-2 12N11-3A-1	134x75x133	1,1	2	20	240	

Modello *Model*		**Sostituisce** *Replace*	**Dimensioni Poli** *Terminal Dimensions* **(mm)**	**Peso** *Weight* **(Kg)**	**Corrente Di Carica** *Charge Current* **(Amp)**		**Spunto** *Cranking* **(Ccamp)** *Tested By Argus (Aa500p)*	**Codice a barre** *Barcode*
					Std	**Max**		
HJTX20HQ-FP **246642110** 	NEW	GYZ20H YTX20H-BS YTX20-BS YB16-B-CX YB16-B YB16C-B YB18-A Y50-N18A-A GYZ20L GYZ20HL YTX20HL-BS YTX24HL-BS YTX15L-BS YTX18L-BS YTX20L-BS YB16HL-A-CX Y50-N18L-A-CX YB16L-B YB16L-A2 YB16CL-B YB18L-A2 Y50-N18L-A Y50-N18L-A2 Y50-N18L-A3 SYB16L-B SY50-N18L-AT	175x87x130	1,7	3,5	28	420	
HJTX20CH-FP **246642120** 	NEW	GYZ16H YTX16-BS YTX16-BS-1 YTX20CH-BS YB16B-A YB16B-A1 HYB16-AB	150x87x105	1,2	3	24	360	
HJ51913-FP **246642130** 	NEW	51814 51913 52015 HJ-18-12	181x77x170	1,7	4	28	450	
HJTX30Q-FP **246642140** 	NEW	YIX30L YIX30L-BS Y60N24-A Y60N24AL-B YB30L-B YB30CL-B 52515 53030 53034 YHD-12	166x123x163	2	4	32	480	
HJB5L-FP **246642150** 	NEW	YB4L-A YB4L-B YB5L-B YB6L-B YB7C-A 12N4-3B 12N5-3B 12N5.5-3B 12N7A-3A 12N7CZ-3D	120x60x92	0,4	0,8	8	96	

BATTERIE AL LITIO

LITHIUM BATTERIES

Modello *Model*		**Sostituisce** *Replace*	**Dimensioni Poli** *Terminal Dimensions* **(mm)**	**Peso** *Weight* **(Kg)**	**Corrente Di Carica** *Charge Current* **(Amp)**		**Spunto** *Cranking* **(Ccamp)** *Tested By Argus (Aa500p)*	**Codice a barre** *Barcode*
					Std	**Max**		
HJB9Q-FP **246642160** 	NEW	YB7-A YB9A-A YB9-B 12N7-4A 12N7-4B 12N9-4B-1 YB7L-B YB9L-A2 YB9L-B 12N7-3B 12N7D-3B 12N9-3A 12N9-3B	134x75x133	0,6	1,5	15	180	
LFP01 **246642170** 	NEW	-	92x52x90	0,5	1	10	120	

BS-Battery è un marchio leader nella produzione di batterie per moto e scooter. Grazie all'eccellente qualità dei suoi prodotti, realizzati con tecnologie avanzate e con l'obiettivo di garantire la massima affidabilità ed elevate prestazioni, BS-Battery è uno tra i marchi più importanti del settore, apprezzato in tutto il mondo. La formula del successo di BS-Battery è la combinazione tra alto livello tecnologico e produzione delocalizzata soggetta ad attentissimi controlli per assicurare l'immissione sul mercato di prodotti di alta qualità ma a prezzi particolarmente convenienti. L'azienda giapponese riesce così ad offrire una gamma completa di batterie sia per dimensioni che per tipologia (al litio,convenzionali, sigillate, attivate e al gel).

BS-Battery *is a leading brand in the production of batteries for motorcycles and scooters. Thanks to the excellent quality of its products, made with advanced technologies and with the aim of ensuring maximum reliability and high performance, BS-Battery is one of the most important brands in the industry, appreciated all over the world.*

The secret of BS-Battery's success is the combination of high technological level and delocalized production subject to very careful controls to ensure the placing on the market of high quality products but at particularly convenient prices. The Japanese company is able to offer a complete range of batteries both in size and type (lithium, conventional, sealed, activated and gel).







BATTERIE AL LITIO

LITHIUM BATTERIES

Modello *Model*		**Sostituisce** *Replace*	**Dimensioni Poli** *Terminal Dimensions* **(mm)**	**Peso** *Weight* **(Kg)**	**Spunto** *Cranking* **(Ccamp)** *Tested By Argus (Aa500p)*	**Codice a barre** *Barcode*
BSLi-01 **246641000** 	NEW	Applicazioni KTM I *KTM applications*	92x52x90	0,55	140	
BSLi-02 **246641010** 	NEW	BTZ5S BTZ7S BTX4L BTX5L BTX7L-BS BB4L-B BB5L-B 12N5-3B 12N7-3B	107X56X85	0,55	140	
BSLi-03 **246641020** 	NEW	BT7B-4 BT9B-4 BTX7A BT9B-BS BTX9-BS BB9-B 12N9-4B-1	134x65x92	0,78	210	
BSLi-04 **246641030** 	NEW	BTZ10S BT12B-4 BT14B-4 BTX14AH BT12B-BS BT14B-BS BB14-B2 BB14A-A1	134x65x92	0,95	280	
BSLi-06 **246641040** 	NEW	BTZ12S BTZ14S BTX12 BTX14 BTX14H	148x86x105	1,06	280	
BSLi-08 **246641050** 	NEW	BTX14L BB16CL-B BB18L-A	148x86x105	1,16	300	
BSLi-10 **246641060** 	NEW	BTX20L BTX20HL BTX24HL-BS B50-N18L-A	148x86x105	1,28	360	

SLA
FACTORY ACTIVATED
Ready to start !



Codice *Code*	Descrizione *Description*	(CCA/EN)	Codice A Barre *Barcode*
246650015	Batteria BIX30L	400	
246650025	Batteria 12-19	235	
246650035	Batteria BTZ7S	130	
246650045	Batteria BTZ10S	190	
246650055	Batteria BTZ12S	215	
246650065	Batteria BTZ14S	230	
246650075	Batteria BT7B-4	110	
246650085	Batteria BT9B-4	120	
246650095	Batteria BT12B-4	210	
246650105	Batteria BT14B-4	210	
246650115	Batteria BB4L-B	50	
246650125	Batteria BTR4A-5	35	
246650135	Batteria BTX4L+	50	
246650145	Batteria BTX5L	70	
246650155	Batteria BB5L-B	65	
246650165	Batteria BTX7A	105	
246650175	Batteria BTX7L	100	
246650185	Batteria BTX9	135	
246650195	Batteria BB9-B	120	
246650205	Batteria BB10L-B2	120	
246650215	Batteria BT12A	175	
246650225	Batteria BTX12	180	
246650235	Batteria BTX14	200	
246650245	Batteria BTX20L	270	

Codice *Code*	Descrizione *Description*	(CCA/EN)	Codice A Barre *Barcode*
246650265	Batteria BT4B-5	40	
246650275	Batteria BTX14AH	210	
246650285	Batteria BB14L-A2	200	
246650295	Batteria BTX14L	200	
246650305	Batteria BTX16	230	
246650315	Batteria BTX20CH	270	
246650335	Batteria BTX24HL	350	
246650345	Batteria BB16CL-B	230	
246650355	Batteria BTZ5S	65	
246650365	Batteria BTZ6S	90	
246650375	Batteria B50N18L-A	350	
246650385	Batteria BB10L-A2	120	
246650395	Batteria BB14L-B2	200	
246650405	Batteria BB7L-B2	100	
246650415	Batteria BB12AL-A2	150	
246650425	Batteria BB14A-A2	170	
246650435	Batteria BB16AL-A2	160	
246650445	Batteria 12N5.5-3B	70	
246650455	Batteria 12N5.5-4A	70	
246650465	Batteria BB3L-B	35	
246650475	Batteria BB7C-A	80	
246650535	Batteria BTZ8V	120	
246650545	Batteria 53030	280	

BS BATTERY / OEM CROSS REFERENCE

Codice Rms *Rms Code*	Modello Bs *Bs Model*	Modello Oem *Oem Model*
246650135	BTX4L + SLA	YTZ4V
246650365	BTZ6S SLA	YTZ6V
246650175	BTX7L SLA	YTZ7V
246650535	BTZ8V SLA	YTZ8V
246650025	SLA 12-19	YT19BL-BS

Codice Rms *Rms Code*	Modello Bs *Bs Model*	Modello Oem *Oem Model*
246650525	BTX14H SLA MAX	GYZ16H
246650485	BTX14HL SLA MAX	GYZ16HL
246650495	BTX20HL SLA MAX	GYZ20HL
246650505	BIX30HL SLA MAX	GYZ32HL
246650515	51913 SLA MAX	GEL 12-19 EXIDE

246650485

BATTERIA SLA - MAX BTX14HL (GEL)
Specifica per modelli Harley Davidson



246650495

BATTERIA SLA - MAX BTX20HL (GEL)
Specifica per modelli Harley Davidson



246650505

BATTERIA SLA - MAX BIX30HL (GEL)
Specifica per modelli Harley Davidson



246650515

BATTERIA SLA - MAX 51913
Specifica per modelli Bmw



246650525

BATTERIA SLA - MAX BTX14H
Specifica per modelli Bmw



246650555

BATTERIA SLA - MAX BTX16H
Specifica per modelli Bmw



Codice RMS *RMS Code*	Capacità *Capacity* Ah (10Hr)	(CCA/EN)	Dimensioni - *Dimensions* mm (±2 mm)			Layout	Terminale *Terminal*	Note
			L	W	H			
246650485	14	220	149	87	144	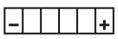		
246650495	20	290	176	87	154	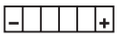		
246650505	30	400	166	130	175*			*Disponibile con un distanziale alla base portando l'altezza a 197 mm | *Available with spacer at the base, bringing the height to 197 mm*
246650515	21 (20Hr)	210	182	77	168	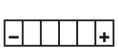		
246650525	14	220	150	87	145	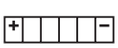		
246650555	16 (20Hr)	220	150	87	161			

BATTERIE GIÀ ATTIVATE - *FACTORY ACTIVATED*

Modello Batteria *Battery Model*		**V**	**Ah**	**Spunto** *Crancking Power* **(Amps)**	**Dimensioni - *Dimensions* (mm)**			**Peso Con Acido** *Weight With Electrolyte*	**Polarità** *Polarity*	**Codice RMS** *RMS Code*		**Codice a barre** *Barcode*
					L	**W**	**H**					
EB4L-B GEL	NEW	12	4	40	120	70	91	1,5	– +	**246650110**		
ETZ7S(FA)		12	6	130	113	70	105	2	– +	**246650031**		
ET7B-4(FA)		12	6,5	110	151	65	93	2,3	+ –	**246650071**		
ET9B-4(FA)		12	8	120	151	70	105	2,8	+ –	**246650081**		
ETZ10S(FA)		12	8,5	190	150	87	93	2,8	+ –	**246650041**		
ETX9 GEL	NEW	12	8	135	150	87	105	2,7	+ –	**246650240**		
EB9-B GEL	NEW	12	9	120	135	75	138	2,8	+ –	**246650180**		
ET12B-4(FA)		12	10	210	151	70	130	3,6	+ –	**246650091**		
ETZ12S(FA)		12	11	210	151	88	107	3,1	+ –	**246650051**		
ETZ14S(FA)		12	11,2	230	151	88	107	3,5	+ –	**246650061**		
ET14B-4(FA)		12	12	210	151	70	147	4	+ –	**246650101**		
CP12-20(FA)		12	20	275	181	76	167	6,2	– +	**246650511**		
ETX20HL GEL	NEW	12	20	310	175	87	135	5,9	– +	**246650510**		
51913 GEL	NEW	12	22	250	181	76	167	5,5	– +	**246650190**		

BATTERIE STANDARD - *STANDARD BATTERIES*

Modello Batteria *Battery Model*	Capacità *Capacity* Ah (10Hr)	Spunto *Crancking Power* Cca A (-18°C)	Dimensioni - *Dimensions* mm (±2 mm)			Layout	Terminale *Terminal*	Codice RMS *RMS Code*		Codice a barre *Barcode*	Note
			L	W	H						
BB4L-B	4	50	120	70	92			**246600065**			Con Acido a corredo *With electrolyte*
BB5L-B	5	65	120	60	130			**246600085**			Con Acido a corredo *With electrolyte*
12N5.5-3B	5,5	55	135	60	130			**246600295**			Con Acido a corredo *With electrolyte*
BB7-A	8	85	135	75	133			**246600135**			Con Acido a corredo *With electrolyte*
BB7L-B2	8	124	135	75	133			**246600285**			Con Acido a corredo *With electrolyte*
BB9-B	9	115	135	75	139			**246600155**			Con Acido a corredo *With electrolyte*
BB10L-A2	11	130	135	90	145			**246600445**			Con Acido a corredo *With electrolyte*
BB10L-BP	11	165	135	90	145		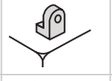	**246600185**			Con Acido a corredo *With electrolyte*
BB10L-B2	11	130	135	90	145			**246600195**			Con Acido a corredo *With electrolyte*
BB12AL-A	12	155	134	80	160			**246600255**			Con Acido a corredo *With electrolyte*
BB12AL-A2	12	155	134	80	160			**246600275**			Con Acido a corredo *With electrolyte*
BB12A-B	12	155	134	80	160			**246600455**			Con Acido a corredo *With electrolyte*
BB12A-A	12	155	134	80	160			**246600715**			Con Acido a corredo *With electrolyte*
BB14L-A2	14	175	134	89	166			**246600435**			Con Acido a corredo *With electrolyte*
BB14-A2	14	175	134	89	166		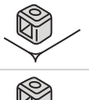	**246600335**			Con Acido a corredo *With electrolyte*
BB14-B2	14	175	134	89	166			**246600475**	NEW		Con Acido a corredo *With electrolyte*
BB16AL-A2	16	210	207	71,5	164			**246600385**			Con Acido a corredo *With electrolyte*
51913	19 (20Hr)	210	186	82	171			**246600755**			Con Acido a corredo *With electrolyte*
B60-N30L-A (53030)	30	300	184	130	170			**246600745**			Con Acido a corredo *With electrolyte*

BATTERIE SIGILLATE - *MAINTENANCE FREE*

Modello Batteria *Battery Model*	**Capacità** *Capacity* **Ah (10Hr)**	**Spunto** *Crancking Power* **Cca A (-18°C)**	**Dimensioni** - *Dimensions* **mm (±2 mm)**			**Layout**	**Terminale** *Terminal*	**Codice RMS** *RMS Code*		**Codice a barre** *Barcode*	**Note**
			L	**W**	**H**						
BTX4L-BS+	4,2	50	113	70	85	– +		**246610025**			Con Acido a corredo *With electrolyte*
BTX5L-BS	4	80	113	70	105	– +		**246610045**			Con Acido a corredo *With electrolyte*
BTX7L-BS	6	100	113	70	130	– +		**246610065**			Con Acido a corredo *With electrolyte*
BTX7A-BS	6	105	150	87	93	+ –		**246610055**			Con Acido a corredo *With electrolyte*
BTZ7S-BS	6	130	113	70	105	– +		**246610195**			Con Acido a corredo *With electrolyte*
BT7B-BS	6.5	85	150	65	93	+ –		**246610155**			Con Acido a corredo *With electrolyte*
BTX9-BS	8	135	150	87	105	+ –		**246610095**			Con Acido a corredo *With electrolyte*
BT9B-BS	8	110	150	68	105	+ –		**246610165**			Con Acido a corredo *With electrolyte*
BTZ10S-BS	8,5	190	150	88	91	+ –		**246610175**			Con Acido a corredo *With electrolyte*
BT9A-BS	9	120	135	75	139	+ –		**246610105**			Con Acido a corredo *With electrolyte*
BTX12-BS	10	180	150	87	130	+ –		**246610115**			Con Acido a corredo *With electrolyte*
BT12A-BS	10	175	150	88	105	+ –		**246610225**			Con Acido a corredo *With electrolyte*
BT12B-BS	10	210	150	69	130	+ –		**246610125**			Con Acido a corredo *With electrolyte*
BTZ12S-BS	11	215	150	88	110	+ –		**246610185**			Con Acido a corredo *With electrolyte*
BTZ14S-BS	11,2	230	150	88	110	+ –		**246610215**			Con Acido a corredo *With electrolyte*
BTX14-BS	12	200	150	87	145	+ –		**246610135**			Con Acido a corredo *With electrolyte*
BTX14L-BS	12	200	150	87	145	– +		**246610205**			Con Acido a corredo *With electrolyte*
BTX14AHL- BS	12	210	133	90	164	– +		**246610275**			Con Acido a corredo *With electrolyte*
BTX16-BS	14	230	150	87	161	+ –		**246610145**			Con Acido a corredo *With electrolyte*
BTX20L-BS	18	270	175	87	155	– +		**246610075**			Con Acido a corredo *With electrolyte*
BTX20HL-BS	18	310	175	87	155	– +		**246610255**			Con Acido a corredo *With electrolyte*

BATTERIE STANDARD - *STANDARD BATTERIES*

Modello Batteria *Battery Model*	V	Ah	Spunto *Crancking Power* A(En)	Dimensioni - *Dimensions* (mm)			Peso Con Acido *Weight With Electrolyte*	Volume Acido *Electrolyte Capacity* (L)	Polarità *Polarity*	Terminale *Terminal*	Codice RMS *RMS Code*		Codice a barre *Barcode*	Note
				L	W	H								
6N4-2A UN	6	4	-	69	69	90	-	-	- +	2	**246600640**	NEW		Con Acido a corredo *With electrolyte*
EB4L-B	12	4	50	121	71	93	1,5	0,3	- +	2	**246600060**			Con Acido a corredo *With electrolyte*
EB5L-B	12	5	65	120	60	130	-	-	- +	3	**246600081**			Con Acido a corredo *With electrolyte*
EB9-B	12	9	130	137	76	135	3,1	0,6	+ -	3	**246600150**			Con Acido a corredo *With electrolyte*
EB10L-BP	12	11	160	135	90	145	5	0,81	- +	3	**246600180**			Con Acido a corredo *With electrolyte*
EB10L-BP(10)	12	10	160	135	90	145	5	0,81	- +	3	**246600230**	NEW		Con Acido a corredo *With electrolyte*
EB12AL-A	12	12	165	135	81	160	4,1	0,7	- +	3	**246600250**			Con Acido a corredo *With electrolyte*
EB12A-A	12	12	155	134	80	160	-	-	+ -	3	**246600711**			Con Acido a corredo *With electrolyte*
EB14L-A2	12	14	190	134	89	166	4,1	0,7	- +	5	**246600300**			Con Acido a corredo *With electrolyte*

Terminali	*Terminals*			**Terminali**	*Terminals*			**Terminali**	*Terminals*		
N°	Frontale *Front*	Laterale *Lateral*	Superiore *Superior*	N°	Frontale *Front*	Laterale *Lateral*	Superiore *Superior*	N°	Frontale *Front*	Laterale *Lateral*	Superiore *Superior*
1	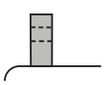		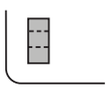	3		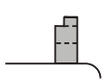	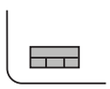	5	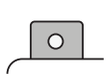		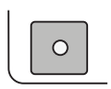
2	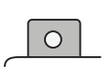		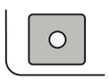	4	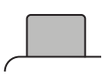		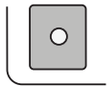	6			

BATTERIE SIGILLATE - *MAINTENANCE FREE*

Modello Batteria *Battery Model*	V	Ah	Spunto *Cranking Power* A(En)	Dimensioni - *Dimensions* (mm) L	W	H	Peso Con Acido *Weight With Electrolyte*	Volume Acido *Electrolyte Capacity* (L)	Polarità *Polarity*	Terminale *Terminal*	Codice RMS *RMS Code*		Codice a barre *Barcode*	Note
YTX4L-BS	12	3	50	110	67	86	1,7	0,27	– +	2	**246610020**			Con Acido a corredo *With electrolyte*
YTX5L-BS	12	4	70	113	70	103	1,9	0,31	– +	2	**246610040**			Con Acido a corredo *With electrolyte*
ETZ5S	12	4	65	113	70	85	1,5	0,19	– +	2	**246610280**	NEW		Con Acido a corredo *With electrolyte*
YTX7A-BS	12	6	80	152	88	94	2,4	0,38	+ –	2	**246610050**			Con Acido a corredo *With electrolyte*
YTX7L-BS	12	6	80	114	71	131	2,5	0,33	– +	2	**246610060**			Con Acido a corredo *With electrolyte*
YTZ7S-BS	12	6	120	114	70	108	2,1	0,3	– +	5	**246610190**			Con Acido a corredo *With electrolyte*
YT7B-BS	12	6,5	120	150	65	92	2,6	0,4	+ –	5	**246610150**			Con Acido a corredo *With electrolyte*
YTX9-BS	12	8	120	145	82	106	3,2	0,45	+ –	2	**246610090**			Con Acido a corredo *With electrolyte*
YT9B-BS	12	8	155	150	70	105	3,4	0,48	+ –	5	**246610160**			Con Acido a corredo *With electrolyte*
YTZ10S-BS	12	8,6	210	150	87	93	3,2	0,5	+ –	5	**246610170**			Con Acido a corredo *With electrolyte*
YTX9A-BS	12	9	140	137	76	136	3,2	0,57	+ –	3	**246610100**			Con Acido a corredo *With electrolyte*
YTX12-BS	12	10	180	149	86	131	4	0,6	+ –	2	**246610110**			Con Acido a corredo *With electrolyte*
YT12B-BS	12	10	160	152	70	131	4,5	0,5	+ –	5	**246610120**			Con Acido a corredo *With electrolyte*
YT12A-BS	12	10	180	150	87	106	3,2	0,54	+ –	5	**246610200**			Con Acido a corredo *With electrolyte*
YTZ12S-BS	12	11	210	150	87	110	3,7	0,62	+ –	5	**246610180**			Con Acido a corredo *With electrolyte*
YTZ14S-BS	12	11,2	230	150	87	110	3,9	0,64	+ –	5	**246610210**			Con Acido a corredo *With electrolyte*
YTX14-BS	12	12	200	149	86	147	4,5	0,69	+ –	2	**246610130**			Con Acido a corredo *With electrolyte*

Terminali	*Terminals*			**Terminali**	*Terminals*			**Terminali**	*Terminals*		
N°	**Frontale** *Front*	**Laterale** *Lateral*	**Superiore** *Superior*	**N°**	**Frontale** *Front*	**Laterale** *Lateral*	**Superiore** *Superior*	**N°**	**Frontale** *Front*	**Laterale** *Lateral*	**Superiore** *Superior*
1	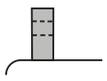	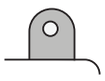	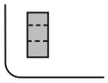	3	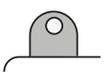	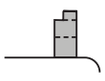	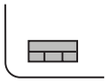	5	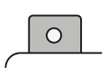		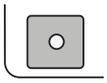
2	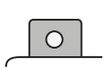	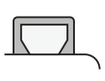	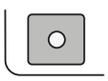	4	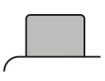		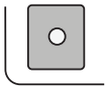	6			



121830733

CINGHIA BATTERIA | *BATTERY BELT*

PIAGGIO 125-150-200: Vespa PX • Cosa • Vespa T5 • Vespa PXE Arcobaleno
VNX-VLX-VSX-VNX5T-VLR1T-VLR-VSR1-VNX2-VLX2-VSX2
R.O. 218812



121830743

CINGHIA BATTERIA | *BATTERY BELT*

PIAGGIO 50-150: Vespa PK
R.O. 90854



246700070

CONNESSIONE PERMANENTE PER CARICA BATTERIE E BATTERIE IN MODALITÀ MANTENIMENTO | *BATTERY CHARGE MAINTAINER CONNECTOR*



246700060

CONNETTORE ACCENDISIGARI | *CIGARETTE LIGHTER CONNECTOR*
Adattabile a tutti i caricabatterie 6V-12V | *Suitable for all 6V-12V battery chargers*



246700200

CL-01 PINZE PER CARICABATTERIE | *MOTORCYCLE BATTERY CLAMPS CL-01*
Compatibile con caricabatterie BS: BA09, BA10, BS15, BS20, BS40, BS60, BS80 & PA-03 | *Compatible with BS battery charger: BA09, BA10, BS15, BS20, BS40, BS60, BS80 & PA-03*



246700210

CL-02 PINZE PER CARICABATTERIE | *MOTORCYCLE BATTERY CLAMPS CL-02*
Compatibile con caricabatterie BS: BA09, BA10, BS15, BS20, BS40, BS60, BS80 & PA-03 | *Compatible with BS battery charger: BA09, BA10, BS15, BS20, BS40, BS60, BS80 & PA-03*





246700100

BK10 - CARICABATTERIE PROFESSIONALE MULTIPLO | *BK10 - MULTIPLE PROFESSIONAL BATTERY CHARGER*
- 12V - 1000mA x 10
- Caricabatterie e mantenitore di carica fino a 10 batterie da 2 A a 40 A | *Charger and maintainer up to 10 batteries from 2 A to 40 A*
- 3 livelli di carica | *3 stages of charge*
- Protezione interna di calore | *Internal over-heat protection*
- Regolato tramite microprocessore | *Microprocessor controlled*
- Pinze in dotazione ad alta resistenza di corrosione | *With corrosion-resistant output connectors*
- Protezione contro il corto circuito, polarità invertita e sovraccarico | *Output short circuit, reverse polarity and overload protection*
- Dimensioni: 401x151x73 mm | *Dimensions: 401x151x73 mm*
- Peso: 3,6 Kg | *Weight: 3,6 Kg*



246700130

CARICATORE - MANTENITORE PER BATTERIE AL LITIO | *LITHIUM BATTERY CHARGER - MAINTAINER*
- Corrente di carica 1-3 A | *Output current 1-3 A*
- Voltaggio 6-12 V | *Voltage 6-12 V*
- Protezione da corto circuito | *Short circuit protection*
- Protezione contro inversione di polarità | *Polarity reverse protection*
- Protezione da sovraccarico | *Over charge protection*



246700140

BK15 - CARICABATTERIE PROFESSIONALE MULTIPLO | *BK15 - MULTIPLE PROFESSIONAL BATTERY CHARGER*
- 12V - 1500mA x 5
- Caricabatterie e mantenitore di carica fino a 5 batterie da 2 A a 40 A | *Charger and maintainer up to 5 batteries from 2 A to 40 A*
- Funzione di ricondizionamento delle piastre | *Reconditionnin function*
- 8 Fasi di carica | *8 stages of charge*
- Protezione interna di calore | *Internal over-heat protection*
- Regolato tramite microprocessore | *Microprocessor controlled*
- Pinze in dotazione ad alta resistenza di corrosione | *With corrosion-resistant output connectors*
- Protezione contro il corto circuito, polarità invertita e sovraccarico | *Output short circuit, reverse polarity and overload protection*



246700160

CARICABATTERIE - MANTENITORE DI CARICA AUTOMATICO | *AUTOMATIC BATTERY CHARGER AND MAINTAINER*
- Corrente di carica 900 mA | *Output current 900 mA*
- Voltaggio 6V / 12V | *Voltage 6V / 12V*
- Completamente automatico | *Fully automatic*



246700170

CARICABATTERIE - MANTENITORE DI CARICA AUTOMATICO | *AUTOMATIC BATTERY CHARGER AND MAINTAINER*
- Corrente di carica 1,5 A | • *Output current 1,5 A*
- Voltaggio 12V | *Voltage 12V*
- Completamente automatico | *Fully automatic*



246700220 NEW

CARICATORE - MANTENITORE PER BATTERIE AL LITIO | *LITHIUM BATTERY CHARGER - MAINTAINER*
- Corrente di carica 2Ah | *Output current 2Ah*
- Voltaggio 12 V | *Voltage 12 V*
- Protezione da corto circuito | *Short circuit protection*
- Protezione contro inversione di polarità | *Polarity reverse protection*
- Protezione da sovraccarico | *Over charge protection*





CARICABATTERIE

BATTERY CHARGERS

246700010

BA10 - CARICABATTERIE AUTOMATICO | *BA10 - AUTOMATIC BATTERY CHARGER*
- 6V/12V - 1000mA
- Caricabatterie e mantenitore di carica | *Charger and maintainer*
- 3 livelli di carica | *3 stages of charge*
- Protezione contro il corto circuito | *Short circuit protection*
- Selezione tensione di uscita a 6V/12V | *6V/12V output selection (switch)*



246700090

BS15 - CARICABATTERIE AUTOMATICO | *BS15 - AUTOMATIC BATTERY CHARGER*
- 12V 1500mA
- Caricatore e mantenitore | *Charger and maintainer*
- Funzione desolfatazione | *Reconditionning function*
- 8 fasi di ricarica | *8 stages of charge*
- Adatto per batterie fino a 30Ah | *Desgined for batteries up to 30 Ah*
- Protezione contro il corto circuito, polarità invertita e sovraccarico | *Output short circuit, reverse polarity and overload protection*
- Ideale per il mantenimento della batteria durante il periodo invernale | *Ideal for charging during winter season*
- Pinze in dotazione | *With pliers*



246700190

BS60 - CARICABATTERIE AUTOMATICO | *BS60 - AUTOMATIC BATTERY CHARGER*
- 12V 1000mA / 4000mA / 6000mA
- Caricatore e mantenitore | *Charger and maintainer*
- Funzione desolfatazione | *Desulphation function*
- 9 fasi di ricarica | *9 stages of charge*
- Adatto per batterie fino a 120Ah | *Designed for batteries up to 120Ah*
- Protezione contro il corto circuito, polarità invertita e sovraccarico | *Output short circuit, reverse polarity and overload protection*



TIPO	BA 10 AUTOMATIC	BS 15 SMART	BS 60 SMART
Corrente di alimentazione	*Input range*	100-240 Vac	100-240 Vac	100-240 Vac
Frequenza	*Frequency*	50/60 Hz	50/60 Hz	50/60 Hz
Corrente di carica	*Output current*	1 A	1,5 A	1/4/6 A
Adatto per batterie	*Suitable for*	6 V & 2 V	12V	12V
Funzione rinnovamento	*Rejuvenation mode*	-	Sì	*Yes*	Sì	*Yes*
Funzione equalizzazione	*Equalization mode*	-	Sì	*Yes*	Sì	*Yes*
Capacità	*Capacity* - Carica	*Charging range* - Mantenimento	*Maintenance*	2-40 Ah 2-60 Ah	4-30 Ah 4-120 Ah	3-120 Ah 3-180 Ah
Dimensioni	*Dimensions*	100x65x36 mm	149x71x32 mm	182x88x48 mm
Peso	*Weight*	0,4 Kg	0,45 Kg	0,75 Kg
Tipi batterie	*Battery types*	GEL, AGM, PIOMBO, CALCIO		



246700040

BT01 - TESTER CARICA BATTERIA | *BT01 - BATTERY TESTER*
• Mostra la condizione di carica della batteria al premere del pulsante | *Shows battery condition at the push of the button*



246700050

BT02 - TESTER BATTERIA E ALTERNATORE | *BT02 - BATTERY & ALTERNATOR TESTER*
• Mostra la condizione di carica della batteria e verifica il corretto funzionamento dell'alternatore | *Tests the condition of the battery and the alternator*





246700120

JUMP STARTER 8000-12V
- Tipo di batteria: Litio ferro 12V 24Wh | *Battery type: Lithium iron 12V 24Wh*
- Capacità nominale 24Wh | *Nominal capacity 24Wh*
- Spunto 200A | *Cranking 200A*
- Spunto iniziale 400A | *Cranking peak 400A*
- Dimensioni (mm): 192x100x40 | *Dimensions (mm): 192x100x40*
- Adattatore accensigari incluso | *Cigarettes charger included*
- Uscite: Usb 5V 2,1A / DC 12V 8A | *Output: Usb 5V 2,1A / DC 12V 8A*
- Peso 500 Gr. | *Weight 500 Gr.*



246700150

JUMP STARTER 20000-12V
- Tipo di batteria: Litio ferro 12V 60Wh | *Battery type: Lithium iron 12V 60Wh*
- Capacità nominale 60Wh | *Nominal capacity 60Wh*
- Spunto 500A | *Cranking 500A*
- Spunto iniziale 1200A | *Cranking peak 1200A*
- Dimensioni (mm): 223x140x72 | *Dimensions (mm): 223x140x72*
- Adattatore accensigari incluso | *Cigarettes charger included*
- Uscite: Usb 5V 2,1A / 5V 1A DC 12V 8A | *Output: Usb 5V 2,1A / 5V 1A DC 12V 8A*
- Peso 1400 Gr. | *Weight 1400 Gr.*



246700180

JUMP STARTER BS PB-01 12A
- Tipo di batteria: Litio ferro 12V 44Wh | *Battery type: Lithium iron 12V 44Wh*
- Spunto 200A | *Cranking 200A*
- Spunto iniziale 400A | *Cranking peak 400A*
- Dimensioni (mm): 170x82x32 | *Dimensions (mm): 170x82x32*
- Uscite: Usb 5V 2,1A / DC 12V 10A | *Output: Usb 5V 2,1A / DC 12V 10A*
- Peso 408 Gr. | *Weight 408 Gr.*



TRASMISSIONE

TRANSMISSION
TRANSMISIÓN
TRANSMISSION

Kit JT Chain - Couronne - Pignon	*Kit JT Cadena - Corona - Piñon*	*Kit JT Chain - Crown - Sprockets*	**KIT JT CATENA - CORONA - PIGNONE**	**752**
Chaînes de Transmission	*Cadenas de Transmision*	*Transmission Chains*	**CATENE TRASMISSIONE**	**814**
Maillons Connecteur Chaînes de Transmission	*Enganches Cadenas de Transmision*	*Transmission Chains Connecting Links*	**GIUNTI CATENE TRASMISSIONE**	**823**
Applications Cloches et Embrayages	*Aplicaciones Campanas y Mordazas*	*Clutch Assy and Bells Applications*	**APPLICAZIONI CAMPANE E GIRANTI**	**825**
Cloches d'Embrayage	*Campanas de Embrague*	*Clutch Bells*	**CAMPANE FRIZIONE**	**842**
Embrayages	*Mordazas Embragues*	*Clutch Assy*	**GIRANTI FRIZIONE**	**845**
Kit Embrayage et Cloche	*Kit Embrague y Campana*	*Clutch Bell and Assy Kit*	**SET GIRANTE CAMPANA**	**851**
Courroies de Transmission	*Correas de Transmision*	*Transmission Belts*	**CINGHIE DI TRASMISSIONE**	**852**
Poulies	*Poleas*	*Pulleys*	**PULEGGE**	**898**
Galets	*Rodillos*	*Roller Sets*	**RULLI PULEGGE**	**922**
Kit Variateur	*Kits de Poleas Motrizes*	*Pulley Kits*	**KIT PULEGGE MOTRICI**	**949**
Accessoires Poulies	*Accesorios Poleas*	*Pulleys Accessories*	**ACCESSORI PULEGGE**	**950**
Arbres de Transmission	*Ejes de Transmisión*	*Transmission Shafts*	**ALBERI TRASMISSIONE**	**954**
Accessoires Arbres Transmission	*Accesorios Ejes de Transmisión*	*Transmission Shafts Accessories*	**ACCESSORI ALBERI DI TRASMISSIONE**	**955**
Disques d'Embrayage	*Discos de Embrague*	*Clutch Discs*	**DISCHI FRIZIONE**	**957**
Ressorts d'Embrayage (Vespa-Ape)	*Muelles Embrague (Vespa-Ape)*	*Clutch Springs (Vespa-Ape)*	**MOLLE FRIZIONE (VESPA-APE)**	**958**
Couple Câbles de Transmission (Vespa-Ape)	*Parejas Cables de Transmisión (Vespa-Ape)*	*Transmission Cables Couple (Vespa-Ape)*	**COPPIA TRASMISSIONI PRIMARIE (VESPA-APE)**	**959**
Secteurs Vitesse (Vespa-Ape)	*Selectores Cambio (Vespa-Ape)*	*Gear Box Selectors (Vespa-Ape)*	**PRESELETTORI CAMBIO (VESPA-APE)**	**960**
Accessoires Transmission	*Accesorios Transmisión*	*Transmission Accessories*	**ACCESSORI TRASMISSIONE**	**961**


JT
SPROCKETS
THE WORLD'S LEADING
SPROCKET

CODICI PRODOTTO

KIT CATENA - CORONA - PIGNONE

JTK001450

MODELLO CATENA

CATENA — Heavy Duty X-Ring Chain

JTC520X1R2120DL

- 520 — DIMENSIONI CATENA
- 120 — NUMERO MAGLIE CATENA
- DL — DOPPIO TIPO DI MAGLIA DI GIUNZIONE (Clip - Ribaditura)

MODELLO CATENA

CATENA — Super Competition Chain

JTC420XDR122SL

- 420 — DIMENSIONI CATENA
- 122 — NUMERO MAGLIE CATENA
- SL — TIPO DI MAGLIA DI GIUNZIONE (Chiusura a Clip - Molletta)

MODELLO CATENA

CATENA — Super heavy Duty X-Ring Chain

JTC520Z3098RL

- 520 — DIMENSIONI CATENA
- 3098 — NUMERO MAGLIE CATENA
- RL — CHIUSURA TRAMITE RIBADITURA

MODELLO CATENA

CATENA — Super Competion Chain — NUMERO MAGLIE CATENA

JTC520HDRGB094SL

- 520 — DIMENSIONI CATENA
- GB — COLORAZIONE ORO - NERO
- SL — TIPO DI MAGLIA DI GIUNZIONE (Chiusura a Clip - Molletta)

MODELLO CATENA

CATENA — Heavy Duty X-Ring Chain — NUMERO MAGLIE CATENA

JTC520X1RNN114DL

- 520 — DIMENSIONI CATENA
- NN — COLORAZIONE NICKEL - NICKEL
- DL — DOPPIO TIPO DI MAGLIA DI GIUNZIONE (Clip - Ribaditura)

PIGNONE — NUMERO DENTI

JTF1901.14SC

- 1901 — CODICE IDENTIFICATIVO DISEGNO PIGNONE
- SC — AUTOPULENTE

CORONA — NUMERO DENTI

JTR23.47

- 23 — CODICE IDENTIFICATIVO DISEGNO CORONA

CATENE PER MOTOCICLETTE POWERTRANSFER

Con la sua tecnologia leader e utilizzando solo leghe d'acciaio di alta qualità, JT produce una gamma completa di catene moto di qualità superiore.

le specifiche delle catene di trasmissione JT soddisfano o superano i requisiti richiesti dalle moderne motociclette da competizione, stradali, cross, enduro ed off-road.

MOTOCICLETTE STRADALI E ON-OFF ROAD

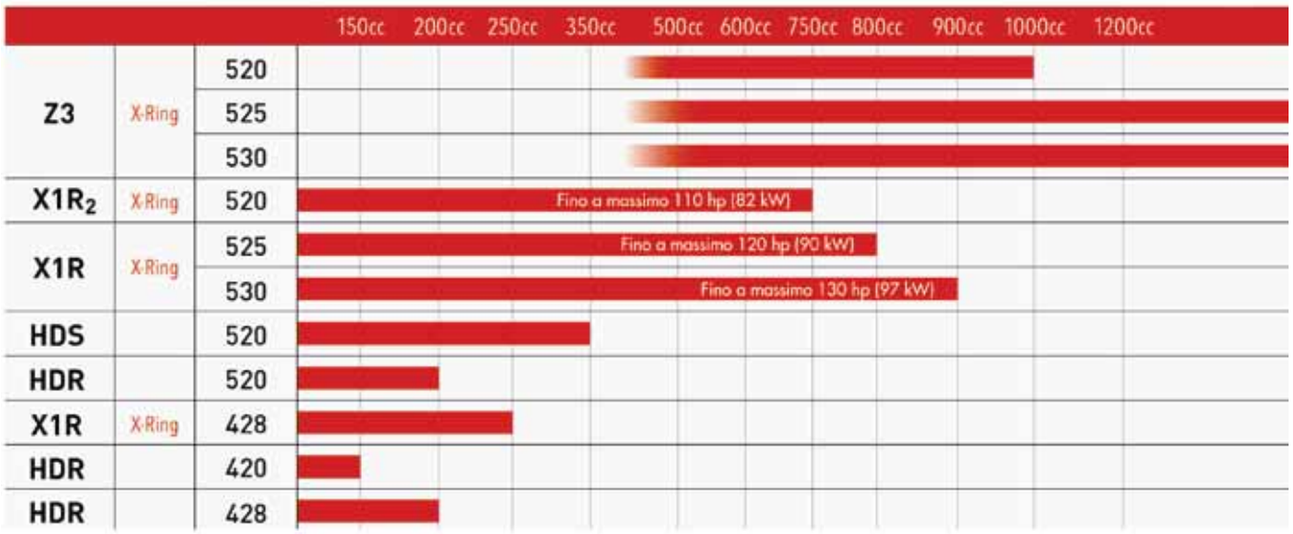

MOTOCROSS

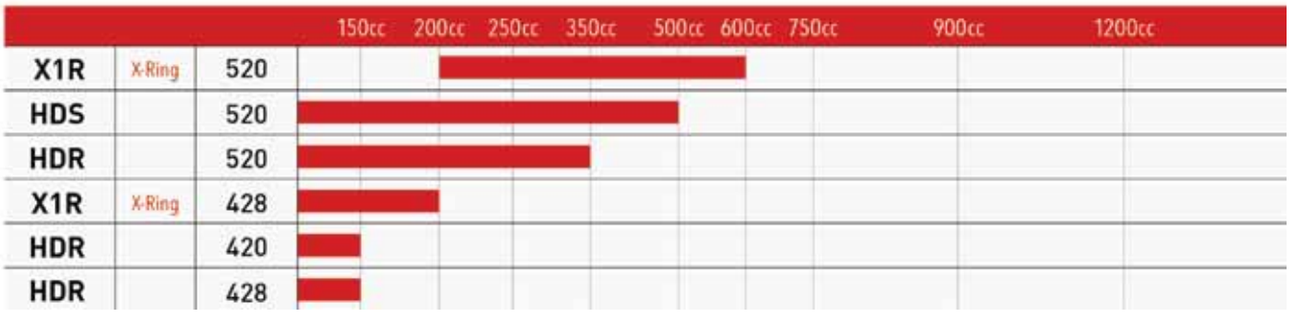

CATENE DI TRASMISSIONE JT
SPECIFICHE TECNICHE

EXPERT SERIES X-RING DRIVE CHAIN

Z3 *Super Heavy Duty X-Ring Chain*

X1R *Heavy Duty X-Ring Chain*

Catena	Diametro Rulli	Lunghezza Perno	Spessore maglia		Peso (100 maglie)	Resistenza media a trazione	Ribaditura	Boccola ad alta Resistenza	X Ring	Maglia di giunzione Disponibile	
			Interna	Esterna							
	mm	mm	mm	mm	kg	kgf (kN)	–	–	–	Standard	Opzionale
520 Z3	10.32	21.40	2.2	2.4	1.87	4240 (41.6)	4	✓	✓	RL	-
525 Z3	10.32	23.70	2.4	2.6	2.10	4690 (46.0)	4	✓	✓	RL	-
530 Z3	10.32	25.30	2.4	2.6	2.19	4690 (46.0)	4	✓	✓	RL	-
428 X1R	8.50	20.80	2.0	2.0	1.12	2800 (27.5)	4	✓	✓	SL	-
520 X1R	10.22	20.30	2.0	2.0	1.55	3700 (36.3)	4	✓	✓	DL	RL/SL
520 X1R$_2$	10.22	20.30	2.0	2.0	1.67	3900 (38.2)	4	✓	✓	DL	RL/SL
525 X1R	10.22	22.60	2.2	2.2	1.87	4050 (39.7)	4	✓	✓	RL	SL
530 X1R	10.22	24.90	2.4	2.4	2.08	4200 (41.2)	4	✓	✓	RL	SL

RACE SERIES COMPETITION DRIVE CHAIN

HDS *Ultimate Competition Chain*

HDR *Super Competition Chain*

Catena	Diametro Rulli	Lunghezza Perno	Spessore maglia		Peso (100 maglie)	Resistenza media a trazione	Ribaditura	Boccola ad alta Resistenza	X Ring	Maglia di giunzione Disponibile	
			Interna	Esterna							
	mm	mm	mm	mm	kg	kgf (kN)	–	–	–	Standard	Opzionale
520 HDS	10.22	18.60	2.2	2.2	1.55	4020 (39.4)	4	✓	-	SL	RL
520 HDR	10.22	17.80	2.0	2.0	1.47	3700 (36.3)	4	✓	-	SL	RL

HEAVY DUTY DRIVE CHAIN

Catena	Diametro Rulli	Lunghezza Perno	Spessore maglia		Peso (100 maglie)	Resistenza media a trazione	Ribaditura	Boccola ad alta Resistenza	X Ring	Maglia di giunzione Disponibile	
			Interna	Esterna							
	mm	mm	mm	mm	kg	kgf (kN)	–	–	–	Standard	Opzionale
420 HDR	7.77	15.05	1.6	1.6	0.74	2000 (19.6)	2	✓	-	SL	-
428 HDR	8.50	18.30	2.0	2.0	0.97	2500 (24.5)	2	✓	-	SL	-

Ribaditura perno 4 2

Ribaditura in 4 punti del perno per una maggiore resistenza a sollecitazioni laterali sulle maglie esterne.

Boccola ad alta resistenza
le boccole ad alta resistenza offrono una maggiore resistenza alla deformazione dovuta ad urti ripetitivi.

X-Ring
Gli X-Ring offrono una miglior tenuta degli o-Ring tradizionali garantendo un minore attrito.

Tutte le catene sigillate JT utilizzano X-Rings.

Alcuni tipi di catene sono anche disponibili in colore Nickel - Nickel e Oro - Nero.

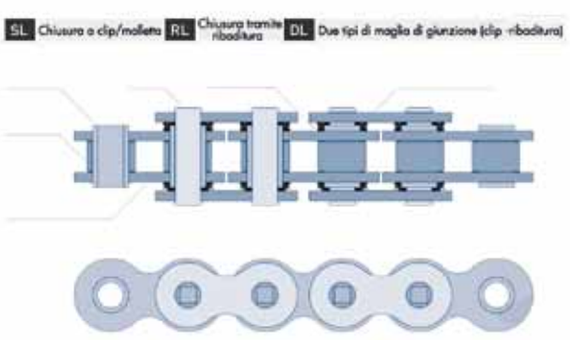

RICERCA PER APPLICAZIONE - *RESEARCH BY APPLICATION*

Modello *Model*	CC	Da *From*	A *To*	Pignone Codice RMS - JT *Front Sprocket* *RMS - JT Code*	Corona Codice RMS - JT *Rear Sprocket* *RMS - JT Code*	Catena Codice RMS - JT *Chain* *RMS - JT Code*	Carrier Codice RMS - JT *Carrier* *RMS - JT Code*	Codice Kit *Kit Code*
APRILIA								
MX SM	50	2003	2006	163720008 JTF1120.11	163721445 JTR24.51	163718035 JTC420HDR126SL		JTK000050
RS	50	1999	2005	163720009 JTF1120.12	163721406 JTR23.47	163718033 JTC420HDR122SL		JTK000010
RS	50	2006	2009	163720021 JTF1128.11	163721034 JTR1133.53	163718038 JTC420HDR132SL		JTK000140
RS	50	2006	2013	163720021 JTF1128.11	163721034 JTR1133.53	163718454 JTC420HDRNB132SL		JTPRO0140
RS	50	2010	2013	163720021 JTF1128.11	163721034 JTR1133.53	163718038 JTC420HDR132SL		JTK000140
RS4	50	2012	2014	163720021 JTF1128.11	163721034 JTR1133.53	163718454 JTC420HDRNB132SL		JTPRO0140
RS4	50	2012	2016	163720021 JTF1128.11	163721034 JTR1133.53	163718038 JTC420HDR132SL		JTK000140
RS4 Replica	50	2012	2014	163720021 JTF1128.11	163721034 JTR1133.53	163718454 JTC420HDRNB132SL		JTPRO0140
RS4 Replica	50	2012	2016	163720021 JTF1128.11	163721034 JTR1133.53	163718038 JTC420HDR132SL		JTK000140
RX	50	1998	2005	163720009 JTF1120.12	163721445 JTR24.51	163718035 JTC420HDR126SL		JTK000060
RX	50	2006	2012	163720021 JTF1128.11	163721026 JTR1131.53	163718454 JTC420HDRNB132SL		JTPRO0150
RX	50	2006	2016	163720021 JTF1128.11	163721026 JTR1131.53	163718038 JTC420HDR132SL		JTK000150
SX	50	2006	2011	163720021 JTF1128.11	163721026 JTR1131.53	163718038 JTC420HDR132SL		JTK000150
SX	50	2006	2014	163720021 JTF1128.11	163721026 JTR1131.53	163718454 JTC420HDRNB132SL		JTPRO0150
SX	50	2012	2016	163720021 JTF1128.11	163721034 JTR1133.53	163718038 JTC420HDR132SL		JTK000140
Tuono	50	2003	2005	163720008 JTF1120.11	163721406 JTR23.47	163718034 JTC420HDR124SL		JTK000020
MX	125	2004	2007	163720410 JTF394.16	163721393 JTR22.45	163718137 JTC520HDR112SL		JTK001020
RS	125	2006	2012	163720411 JTF394.17	163721796 JTR703.40	163718253 JTC520X1R2-110DL		JTK000900
RS Extrema	125	1993	2003	163720411 JTF394.17	163721786 JTR701.41	163718251 JTC520X1R2-106DL		JTK003730
RS Extrema	125	2004	2005	163720411 JTF394.17	163721785 JTR701.40	163718251 JTC520X1R2-106DL		JTK000620
RS Replica	125	1993	2003	163720408 JTF394.14	163721784 JTR701.39	163718252 JTC520X1R2-108DL		JTK000640
RS4	125	2011	2016	163720851 JTF712.13	163721446 JTR25.60	163718500 JTC428HPOGB136SL		JTK003740
RS4 Replica	125	2013	2017	163720851 JTF712.13	163721446 JTR25.60	163718500 JTC428HPOGB136SL		JTK003740
RX	125	2000	2000	163720408 JTF394.14	163721394 JTR22.49	163718255 JTC520X1R2-114DL		JTK001090
RX	125	2008	2012	163720409 JTF394.15	163721394 JTR22.49	163718254 JTC520X1R2-112DL		JTK000990
SX	125	2008	2012	163720409 JTF394.15	163721393 JTR22.45	163718254 JTC520X1R2-112DL		JTK000960
Tuono	125	2003	2007	163720408 JTF394.14	163721785 JTR701.40	163718133 JTC520HDR104SL		JTK000480
RS	250	1995	2004	163720515 JTF436.14	163721554 JTR28.42	163718253 JTC520X1R2-110DL		JTK000740
Moto 6.5	650	1995	1999	163720016 JTF1126.16	163721754 JTR5.49	163718274 JTC520Z3-108RL		JTK000710
Pegaso	650	1992	1997	163720016 JTF1126.16	163721753 JTR5.47	163718275 JTC520Z3-110RL		JTK000870
Pegaso	650	1998	1999	163720415 JTF402.16	163721753 JTR5.47	163718275 JTC520Z3-110RL		JTK000880

Modello *Model*	**CC**	**Da** *From*	**A** *To*	**Pignone Codice RMS - JT** *Front Sprocket RMS - JT Code*	**Corona Codice RMS - JT** *Rear Sprocket RMS - JT Code*	**Catena Codice RMS - JT** *Chain RMS - JT Code*	**Carrier Codice RMS - JT** *Carrier RMS - JT Code*	**Codice Kit** *Kit Code*
Pegaso Cube	650	2000	2000	**163720415 JTF402.16**	**163721753 JTR5.47**	**163718275 JTC520Z3-110RL**		**JTK000880**
Pegaso Factory	650	2007	2009	**163720357 JTF308.15**	**163721750 JTR5.44**	**163718275 JTC520Z3-110RL**		**JTK000770**
Pegaso i.e.	650	2001	2004	**163720415 JTF402.16**	**163721753 JTR5.47**	**163718275 JTC520Z3-110RL**		**JTK000880**
Pegaso Strada	650	2005	2009	**163720357 JTF308.15**	**163721797 JTR703.44**	**163718275 JTC520Z3-110RL**		**JTK000780**
Pegaso Trail	650	2007	2009	**163720357 JTF308.15**	**163721797 JTR703.44**	**163718275 JTC520Z3-110RL**		**JTK000780**
Pegaso Tuscany Tibet	650	2004	2004	**163720415 JTF402.16**	**163721752 JTR5.46**	**163718275 JTC520Z3-110RL**		**JTK000860**
Dorsoduro / ABS	750	2007	2016	**163720814 JTF709.16**	**163721795 JTR702.46**	**163718340 JTC525Z3-112RL**		**JTK003750**
Dorsoduro Factory / ABS	750	2010	2016	**163720814 JTF709.16**	**163721795 JTR702.46**	**163718340 JTC525Z3-112RL**		**JTK003750**
SL Shiver / ABS	750	2007	2016	**163720814 JTF709.16**	**163721793 JTR702.44**	**163718338 JTC525Z3-108RL**		**JTK003760**
SL Shiver GT / ABS	750	2007	2016	**163720814 JTF709.16**	**163721793 JTR702.44**	**163718338 JTC525Z3-108RL**		**JTK003760**
RSV Mille R,SL,SP	1000	1998	2003	**163720694 JTF704.17**	**163721791 JTR702.42**	**163718338 JTC525Z3-108RL**		**JTK001890**
RSV R	1000	2004	2009	**163720693 JTF704.16**	**163721789 JTR702.40**	**163718337 JTC525Z3-106RL**		**JTK001690**
RSV Tuono	1000	2003	2005	**163720694 JTF704.17**	**163721791 JTR702.42**	**163718338 JTC525Z3-108RL**		**JTK001890**
RSV4 Factory	1000	2009	2014	**163720693 JTF704.16**	**163722616 JTR713.40**	**163718338 JTC525Z3-108RL**		**JTK003770**
RSV4 Factory APRC	1000	2011	2014	**163720693 JTF704.16**	**163722618 JTR713.42**	**163718338 JTC525Z3-108RL**		**JTK003780**
RSV4 Factory APRC SE	1000	2011	2014	**163720693 JTF704.16**	**163722618 JTR713.42**	**163718338 JTC525Z3-108RL**		**JTK003780**
RSV4 Factory Racing LE	1000	2017	2017	**163720693 JTF704.16**	**163722617 JTR713.41**	**163718339 JTC525Z3-110RL**		**JTK003790**
RSV4 R / APRC	1000	2011	2015	**163720693 JTF704.16**	**163722616 JTR713.40**	**163718338 JTC525Z3-108RL**		**JTK003770**
RSV4 RF	1000	2015	2017	**163720693 JTF704.16**	**163722617 JTR713.41**	**163718339 JTC525Z3-110RL**		**JTK003790**
RSV4 RR	1000	2016	2017	**163720693 JTF704.16**	**163722617 JTR713.41**	**163718339 JTC525Z3-110RL**		**JTK003790**
Tuono R Racing	1000	2006	2011	**163720693 JTF704.16**	**163721789 JTR702.40**	**163718337 JTC525Z3-106RL**		**JTK001690**
Tuono V4 R / APRC	1000	2012	2016	**163720693 JTF704.16**	**163722618 JTR713.42**	**163718338 JTC525Z3-108RL**		**JTK003780**
BMW								
G450 X	450	2008	2010	**163720419 JTF403.15**	**163722211 JTR8.48**	**163718255 JTC520X1R2-114DL**		**JTK001120**
650 Xchallenge	650	2007	2008	**163720415 JTF402.16**	**163722216 JTR9.47**	**163718276 JTC520Z3-112RL**		**JTK001050**
650 Xcountry	650	2007	2008	**163720415 JTF402.16**	**163722216 JTR9.47**	**163718276 JTC520Z3-112RL**		**JTK001050**
650 Xmoto	650	2007	2008	**163720415 JTF402.16**	**163721798 JTR703.47**	**163718276 JTC520Z3-112RL**		**JTK001060**
F650	650	1994	1995	**163720415 JTF402.16**	**163721753 JTR5.47**	**163718275 JTC520Z3-110RL**		**JTK000880**
F650 Dakar	650	1999	2000	**163720415 JTF402.16**	**163721753 JTR5.47**	**163718276 JTC520Z3-112RL**		**JTK001040**
F650 Dakar	650	1999	2000	**163720415 JTF402.16**	**163722538 JTR5.47ZBK**	**163718232 JTC520X1R2NN112DL**		**JTPRO1040**
F650 Funduro	650	1996	2000	**163720415 JTF402.16**	**163721753 JTR5.47**	**163718275 JTC520Z3-110RL**		**JTK000880**
F650 GS	650	1999	2015	**163720415 JTF402.16**	**163721753 JTR5.47**	**163718276 JTC520Z3-112RL**		**JTK001040**
F650 GS	650	1999	2015	**163720415 JTF402.16**	**163722538 JTR5.47ZBK**	**163718232 JTC520X1R2NN112DL**		**JTPRO1040**
F650 GS (JTR3.41 for 10.5mm bolts)	650	2008	2012	**163720694 JTF704.17**	**163721583 JTR3.41**	**163718342 JTC525Z3-116RL**		**JTK002410**

Modello *Model*	CC	Da *From*	A *To*	Pignone Codice RMS - JT *Front Sprocket* *RMS - JT Code*	Corona Codice RMS - JT *Rear Sprocket* *RMS - JT Code*	Catena Codice RMS - JT *Chain* *RMS - JT Code*	Carrier Codice RMS - JT *Carrier* *RMS - JT Code*	Codice Kit *Kit Code*
F650 GS (JTR6.41 for 8.5mm bolts)	650	2008	2012	163720694 JTF704.17	163721780 JTR6.41	163718342 JTC525Z3-116RL		JTK002400
F650 GS Dakar	650	2001	2005	163720415 JTF402.16	163721753 JTR5.47	163718276 JTC520Z3-112RL		JTK001040
F650 GS Dakar	650	2001	2005	163720415 JTF402.16	163722538 JTR5.47ZBK	163718232 JTC520X1R2NN112DL		JTPRO1040
F650 GS SE	650	2012	2012	163720694 JTF704.17	163721583 JTR3.41	163718342 JTC525Z3-116RL		JTK002410
F650 ST Strada	650	1998	2000	163720415 JTF402.16	163721753 JTR5.47	163718275 JTC520Z3-110RL		JTK000880
G650 GS	650	2011	2015	163720415 JTF402.16	163721753 JTR5.47	163718254 JTC520X1R2-112DL		JTK003800
G650 GS Sertao	650	2012	2013	163720415 JTF402.16	163721753 JTR5.47	163718276 JTC520Z3-112RL		JTK001040
G650 GS Sertao	650	2012	2013	163720415 JTF402.16	163722538 JTR5.47ZBK	163718232 JTC520X1R2NN112DL		JTPRO1040
F700 GS	700	2013	2018	163720694 JTF704.17	163721584 JTR3.42	163718342 JTC525Z3-116RL		JTK002420
F800 GS (JTR3.42 for 10.5mm bolts)	800	2008	2015	163720801 JTF704.16RB	163721584 JTR3.42	163718530 JTC525Z3NN116RL		JTPRO2380
F800 GS (JTR3.42 for 10.5mm bolts)	800	2008	2018	163720693 JTF704.16	163721584 JTR3.42	163718342 JTC525Z3-116RL		JTK002380
F800 GS (JTR6.42 for 8.5mm bolts)	800	2008	2018	163720693 JTF704.16	163721781 JTR6.42	163718342 JTC525Z3-116RL		JTK002370
F800 GS Adventure	800	2013	2018	163720694 JTF704.17	163721584 JTR3.42	163718342 JTC525Z3-116RL		JTK002420
F800 GS Triple Black	800	2012	2012	163720693 JTF704.16	163721584 JTR3.42	163718342 JTC525Z3-116RL		JTK002380
F800 GS Triple Black	800	2012	2012	163720801 JTF704.16RB	163721584 JTR3.42	163718530 JTC525Z3NN116RL		JTPRO2380
F800 GS Trophy	800	2012	2012	163720693 JTF704.16	163721584 JTR3.42	163718342 JTC525Z3-116RL		JTK002380
F800 GS Trophy	800	2012	2012	163720801 JTF704.16RB	163721584 JTR3.42	163718530 JTC525Z3NN116RL		JTPRO2380
F800 R (JTR3.47 for 10.5mm bolts)	800	2009	2018	163720425 JTF405.20	163721585 JTR3.47	163718344 JTC525Z3-120RL		JTK002690
F800 R (JTR6.47 for 8.5mm bolts)	800	2009	2018	163720425 JTF405.20	163721782 JTR6.47	163718344 JTC525Z3-120RL		JTK002680
S1000 R	1000	2013	2018	163720423 JTF404.17	163721847 JTR7.45	163718343 JTC525Z3-118RL		JTK002610
S1000 RR	1000	2009	2011	163720423 JTF404.17	163721846 JTR7.44	163718343 JTC525Z3-118RL		JTK002600
S1000 RR	1000	2012	2018	163720423 JTF404.17	163721847 JTR7.45	163718343 JTC525Z3-118RL		JTK002610
S1000 RR Sport	1000	2010	2010	163720423 JTF404.17	163721846 JTR7.44	163718343 JTC525Z3-118RL		JTK002600
S1000 XR	1000	2014	2018	163720423 JTF404.17	163721847 JTR7.45	163718528 JTC525Z3-128RL		JTK003810
CAGIVA								
Mito Euro 2	125	2004	2008	163720706 JTF711.14	163721788 JTR701.43	163718139 JTC520HDR116SL		JTK001180
Mito SP525	125	2008	2010	163720706 JTF711.14	163721788 JTR701.43	163718139 JTC520HDR116SL		JTK001180
Raptor	125	2004	2010	163720706 JTF711.14	163721788 JTR701.43	163718139 JTC520HDR116SL		JTK001180
DERBI								
GPR Nude	50	2004	2005	163720820 JTF1129.12	163721034 JTR1133.53	163718038 JTC420HDR132SL		JTK003820
GPR Nude	50	2006	2013	163720021 JTF1128.11	163721034 JTR1133.53	163718038 JTC420HDR132SL		JTK000140
GPR Nude	50	2006	2013	163720021 JTF1128.11	163721034 JTR1133.53	163718454 JTC420HDRNB132SL		JTPRO0140
GPR Racing	50	2004	2005	163720820 JTF1129.12	163721034 JTR1133.53	163718038 JTC420HDR132SL		JTK003820
GPR Racing	50	2006	2013	163720021 JTF1128.11	163721034 JTR1133.53	163718038 JTC420HDR132SL		JTK000140

Modello *Model*	**CC**	**Da** *From*	**A** *To*	**Pignone Codice RMS - JT** *Front Sprocket RMS - JT Code*	**Corona Codice RMS - JT** *Rear Sprocket RMS - JT Code*	**Catena Codice RMS - JT** *Chain RMS - JT Code*	**Carrier Codice RMS - JT** *Carrier RMS - JT Code*	**Codice Kit** *Kit Code*
GPR Racing	50	2006	2013	**163720021 JTF1128.11**	**163721034 JTR1133.53**	**163718454 JTC420HDRNB132SL**		**JTPRO0140**
R-DRD Black Devil	50	2004	2005	**163720018 JTF1127.13**	**163721026 JTR1131.53**	**163718037 JTC420HDR130SL**		**JTK000110**
Senda R	50	2000	2002	**163720018 JTF1127.13**	**163721026 JTR1131.53**	**163718039 JTC420HDR134SL**		**JTK000180**
Senda R DRD	50	2002	2005	**163720018 JTF1127.13**	**163721032 JTR1132.53**	**163718041 JTC420HDR140SL**		**JTK000190**
Senda R DRD Pro	50	2006	2013	**163720021 JTF1128.11**	**163721032 JTR1132.53**	**163718038 JTC420HDR132SL**		**JTK000160**
Senda R DRD Racing	50	2006	2013	**163720021 JTF1128.11**	**163721032 JTR1132.53**	**163718037 JTC420HDR130SL**		**JTK000070**
Senda R DRD X-treme	50	2004	2005	**163720018 JTF1127.13**	**163721026 JTR1131.53**	**163718037 JTC420HDR130SL**		**JTK000110**
Senda R DRD X-treme	50	2011	2014	**163720021 JTF1128.11**	**163721026 JTR1131.53**	**163718037 JTC420HDR130SL**		**JTK000080**
Senda R X-Race	50	2004	2005	**163720833 JTF1129.13**	**163721026 JTR1131.53**	**163718037 JTC420HDR130SL**		**JTK003830**
Senda R X-Race	50	2006	2011	**163720021 JTF1128.11**	**163721026 JTR1131.53**	**163718037 JTC420HDR130SL**		**JTK000080**
Senda R X-treme	50	2002	2005	**163720018 JTF1127.13**	**163721026 JTR1131.53**	**163718037 JTC420HDR130SL**		**JTK000110**
Senda R X-treme	50	2006	2016	**163720021 JTF1128.11**	**163721026 JTR1131.53**	**163718037 JTC420HDR130SL**		**JTK000080**
Senda SM DRD	50	2002	2005	**163720019 JTF1127.14**	**163721032 JTR1132.53**	**163718037 JTC420HDR130SL**		**JTK000130**
Senda SM DRD Evo	50	2009	2010	**163720021 JTF1128.11**	**163721034 JTR1133.53**	**163718037 JTC420HDR130SL**		**JTK000090**
Senda SM DRD Evo	50	2009	2010	**163720021 JTF1128.11**	**163721034 JTR1133.53**	**163718453 JTC420HDRNB130SL**		**JTPRO0090**
Senda SM DRD Evo Ltd. Ed.	50	2010	2010	**163720021 JTF1128.11**	**163721034 JTR1133.53**	**163718037 JTC420HDR130SL**		**JTK000090**
Senda SM DRD Evo Ltd. Ed.	50	2010	2010	**163720021 JTF1128.11**	**163721034 JTR1133.53**	**163718453 JTC420HDRNB130SL**		**JTPRO0090**
Senda SM DRD Pro	50	2006	2012	**163720021 JTF1128.11**	**163721032 JTR1132.53**	**163718038 JTC420HDR132SL**		**JTK000160**
Senda SM DRD Racing	50	2006	2010	**163720021 JTF1128.11**	**163721032 JTR1132.53**	**163718037 JTC420HDR130SL**		**JTK000070**
Senda SM DRD Racing	50	2011	2012	**163720021 JTF1128.11**	**163721034 JTR1133.53**	**163718453 JTC420HDRNB130SL**		**JTPRO0090**
Senda SM DRD Racing	50	2011	2016	**163720021 JTF1128.11**	**163721034 JTR1133.53**	**163718037 JTC420HDR130SL**		**JTK000090**
Senda SM DRD Racing Limited	50	2007	2007	**163720021 JTF1128.11**	**163721034 JTR1133.53**	**163718037 JTC420HDR130SL**		**JTK000090**
Senda SM DRD Racing Limited	50	2007	2007	**163720021 JTF1128.11**	**163721034 JTR1133.53**	**163718453 JTC420HDRNB130SL**		**JTPRO0090**
Senda SM X-race	50	2004	2005	**163720019 JTF1127.14**	**163721026 JTR1131.53**	**163718037 JTC420HDR130SL**		**JTK000120**
Senda SM X-race	50	2006	2011	**163720021 JTF1128.11**	**163721026 JTR1131.53**	**163718037 JTC420HDR130SL**		**JTK000080**
Senda SM X-treme	50	2000	2005	**163720019 JTF1127.14**	**163721026 JTR1131.53**	**163718037 JTC420HDR130SL**		**JTK000120**
Senda SM X-treme	50	2006	2016	**163720021 JTF1128.11**	**163721026 JTR1131.53**	**163718037 JTC420HDR130SL**		**JTK000080**
Baja SM	125	2006	2008	**163720275 JTF259.15**	**163721036 JTR1134.48**	**163718076 JTC428HDR134SL**		**JTK000290**
Cross City	125	2007	2013	**163720275 JTF259.15**	**163721037 JTR1134.50**	**163718076 JTC428HDR134SL**		**JTK000310**
Cross City	125	2007	2014	**163720275 JTF259.15**	**163721037 JTR1134.50**	**163718499 JTC428HPOGB134SL**		**JTK003840**
DUCATI								
600 Monster	600	1994	1994	**163720719 JTF736.15**	**163721810 JTR735.38**	**163718248 JTC520X1R2-100DL**		**JTK003850**
600 Monster	600	1995	1998	**163720718 JTF736.14**	**163721815 JTR735.43**	**163718270 JTC520Z3-100RL**		**JTK000400**
600 Monster	600	1999	2001	**163720719 JTF736.15**	**163721818 JTR735.46**	**163718271 JTC520Z3-102RL**		**JTK000470**

Modello *Model*	**CC**	**Da** *From*	**A** *To*	**Pignone** **Codice RMS - JT** *Front Sprocket* *RMS - JT Code*	**Corona** **Codice RMS - JT** *Rear Sprocket* *RMS - JT Code*	**Catena** **Codice RMS - JT** *Chain* *RMS - JT Code*	**Carrier** **Codice RMS - JT** *Carrier* *RMS - JT Code*	**Codice Kit** *Kit Code*
600 SS	600	1995	1999	**163720719** **JTF736.15**	**163721813** **JTR735.41**	**163718269** **JTC520Z3-098RL**		**JTK000390**
620 Monster Dark	620	2003	2003	**163720719** **JTF736.15**	**163721818** **JTR735.46**	**163718273** **JTC520Z3-106RL**		**JTK000590**
620 Monster Dark	620	2004	2006	**163720719** **JTF736.15**	**163721819** **JTR735.48**	**163718273** **JTC520Z3-106RL**		**JTK000600**
620 Monster Dark MD Monodisco	620	2004	2004	**163720719** **JTF736.15**	**163721818** **JTR735.46**	**163718273** **JTC520Z3-106RL**		**JTK000590**
620 Monster i.e.	620	2002	2003	**163720719** **JTF736.15**	**163721818** **JTR735.46**	**163718273** **JTC520Z3-106RL**		**JTK000590**
620 Monster i.e.	620	2004	2006	**163720719** **JTF736.15**	**163721819** **JTR735.48**	**163718273** **JTC520Z3-106RL**		**JTK000600**
620 Multistrada	620	2005	2006	**163720719** **JTF736.15**	**163721819** **JTR735.48**	**163718274** **JTC520Z3-108RL**		**JTK000680**
620 Multistrada Dark	620	2005	2006	**163720719** **JTF736.15**	**163721819** **JTR735.48**	**163718274** **JTC520Z3-108RL**		**JTK000680**
620 S Monster i.e.	620	2002	2003	**163720719** **JTF736.15**	**163721818** **JTR735.46**	**163718273** **JTC520Z3-106RL**		**JTK000590**
620 S Monster i.e.	620	2004	2006	**163720719** **JTF736.15**	**163721819** **JTR735.48**	**163718273** **JTC520Z3-106RL**		**JTK000600**
620 Sport	620	2003	2003	**163720719** **JTF736.15**	**163721816** **JTR735.44**	**163718270** **JTC520Z3-100RL**		**JTK000430**
695 Monster	695	2007	2008	**163720719** **JTF736.15**	**163721814** **JTR735.42**	**163718249** **JTC520X1R2-102DL**		**JTK003860**
696 Monster	695	2008	2014	**163720719** **JTF736.15**	**163721817** **JTR735.45**	**163718274** **JTC520Z3-108RL**		**JTK000670**
750 Monster	750	1996	1997	**163720719** **JTF736.15**	**163721810** **JTR735.38**	**163718247** **JTC520X1R2-098DL**		**JTK003870**
750 Monster	750	1998	2001	**163720719** **JTF736.15**	**163721813** **JTR735.41**	**163718270** **JTC520Z3-100RL**		**JTK000420**
750 Monster i.e.	750	2002	2002	**163720719** **JTF736.15**	**163721813** **JTR735.41**	**163718271** **JTC520Z3-102RL**		**JTK000450**
750 Monster i.e. Dark	750	2002	2002	**163720719** **JTF736.15**	**163721813** **JTR735.41**	**163718271** **JTC520Z3-102RL**		**JTK000450**
750 Sport	750	2002	2002	**163720719** **JTF736.15**	**163721812** **JTR735.40**	**163718247** **JTC520X1R2-098DL**		**JTK003880**
750 SS	750	1991	1998	**163720719** **JTF736.15**	**163721809** **JTR735.37**	**163718269** **JTC520Z3-098RL**		**JTK000350**
750 SS	750	1999	2002	**163720718** **JTF736.14**	**163721812** **JTR735.40**	**163718269** **JTC520Z3-098RL**		**JTK000340**
795 Monster	795	2012	2015	**163720725** **JTF740.15**	**163721831** **JTR752.39**	**163718336** **JTC525Z3-104RL**	**163722217** **JTA750B**	**JTK001590**
796 Hypermotard	796	2010	2011	**163720725** **JTF740.15**	**163721832** **JTR752.41**	**163718336** **JTC525Z3-104RL**	**163722217** **JTA750B**	**JTK001610**
796 Hypermotard	796	2012	2012	**163720728** **JTF741.15**	**163721832** **JTR752.41**	**163718336** **JTC525Z3-104RL**	**163722217** **JTA750B**	**JTK001620**
796 Monster	796	2012	2015	**163720725** **JTF740.15**	**163721831** **JTR752.39**	**163718336** **JTC525Z3-104RL**	**163722217** **JTA750B**	**JTK001590**
796 Monster Corse Stripe	796	2015	2015	**163720725** **JTF740.15**	**163721831** **JTR752.39**	**163718336** **JTC525Z3-104RL**	**163722217** **JTA750B**	**JTK001590**
797 Monster	797	2017	2018	**163720719** **JTF736.15**	**163722605** **JTR746.46**	**163718336** **JTC525Z3-104RL**		**JTK003890**
800 Monster Dark	800	2003	2003	**163720719** **JTF736.15**	**163721814** **JTR735.42**	**163718271** **JTC520Z3-102RL**		**JTK000460**
800 Monster i.e.	800	2003	2004	**163720719** **JTF736.15**	**163721814** **JTR735.42**	**163718271** **JTC520Z3-102RL**		**JTK000460**
800 Monster S2R	800	2005	2007	**163720719** **JTF736.15**	**163721829** **JTR751.42**	**163718272** **JTC520Z3-104RL**	**163722217** **JTA750B**	**JTK000500**
800 Monster S2R Dark	800	2006	2006	**163720719** **JTF736.15**	**163721829** **JTR751.42**	**163718272** **JTC520Z3-104RL**	**163722217** **JTA750B**	**JTK000500**
800 Scrambler Cafe Racer	800	2018	2018	**163720719** **JTF736.15**	**163722605** **JTR746.46**	**163718272** **JTC520Z3-104RL**		**JTK003900**
800 Scrambler Classic	800	2015	2018	**163720719** **JTF736.15**	**163722605** **JTR746.46**	**163718272** **JTC520Z3-104RL**		**JTK003900**
800 Scrambler Desert Sled	800	2018	2018	**163720719** **JTF736.15**	**163722605** **JTR746.46**	**163718272** **JTC520Z3-104RL**		**JTK003900**

Modello *Model*	**CC**	**Da** *From*	**A** *To*	**Pignone** **Codice RMS - JT** *Front Sprocket* *RMS - JT Code*	**Corona** **Codice RMS - JT** *Rear Sprocket* *RMS - JT Code*	**Catena** **Codice RMS - JT** *Chain* *RMS - JT Code*	**Carrier** **Codice RMS - JT** *Carrier* *RMS - JT Code*	**Codice Kit** *Kit Code*
800 Scrambler Flat Track Pro	800	2015	2016	**163720719** **JTF736.15**	**163722605** **JTR746.46**	**163718272** **JTC520Z3-104RL**		**JTK003900**
800 Scrambler Full Throttle	800	2015	2018	**163720719** **JTF736.15**	**163722605** **JTR746.46**	**163718272** **JTC520Z3-104RL**		**JTK003900**
800 Scrambler Icon	800	2015	2018	**163720719** **JTF736.15**	**163722605** **JTR746.46**	**163718272** **JTC520Z3-104RL**		**JTK003900**
800 Scrambler Icon	800	2018	2018	**163720719** **JTF736.15**	**163722605** **JTR746.46**	**163718272** **JTC520Z3-104RL**		**JTK003900**
800 Scrambler Italia Independent	800	2016	2016	**163720719** **JTF736.15**	**163722605** **JTR746.46**	**163718272** **JTC520Z3-104RL**		**JTK003900**
800 Scrambler Mach 2	800	2017	2018	**163720719** **JTF736.15**	**163722605** **JTR746.46**	**163718272** **JTC520Z3-104RL**		**JTK003900**
800 Scrambler Urban Enduro	800	2015	2016	**163720719** **JTF736.15**	**163722605** **JTR746.46**	**163718272** **JTC520Z3-104RL**		**JTK003900**
800 Sport	800	2003	2003	**163720719** **JTF736.15**	**163721811** **JTR735.39**	**163718269** **JTC520Z3-098RL**		**JTK000370**
800 SS	800	2003	2007	**163720719** **JTF736.15**	**163721811** **JTR735.39**	**163718269** **JTC520Z3-098RL**		**JTK000370**
820 Hypermotard	820	2013	2014	**163720728** **JTF741.15**	**163722611** **JTR752.45**	**163718338** **JTC525Z3-108RL**	**163722217** **JTA750B**	**JTK003910**
820 Hypermotard SP	820	2013	2014	**163720728** **JTF741.15**	**163722611** **JTR752.45**	**163718338** **JTC525Z3-108RL**	**163722217** **JTA750B**	**JTK003910**
820 Hyperstrada	820	2013	2014	**163720728** **JTF741.15**	**163722611** **JTR752.45**	**163718338** **JTC525Z3-108RL**	**163722217** **JTA750B**	**JTK003910**
821 Hypermotard	821	2014	2016	**163720728** **JTF741.15**	**163722611** **JTR752.45**	**163718338** **JTC525Z3-108RL**	**163722217** **JTA750B**	**JTK003910**
821 Hypermotard SP	821	2014	2016	**163720728** **JTF741.15**	**163722611** **JTR752.45**	**163718338** **JTC525Z3-108RL**	**163722217** **JTA750B**	**JTK003910**
821 Hypermstrada	821	2014	2016	**163720728** **JTF741.15**	**163722611** **JTR752.45**	**163718338** **JTC525Z3-108RL**	**163722217** **JTA750B**	**JTK003910**
848	848	2008	2010	**163720728** **JTF741.15**	**163721831** **JTR752.39**	**163718333** **JTC525Z3-098RL**	**163722217** **JTA750B**	**JTK001490**
848 Evo	848	2011	2013	**163720728** **JTF741.15**	**163721831** **JTR752.39**	**163718333** **JTC525Z3-098RL**	**163722217** **JTA750B**	**JTK001490**
848 Evo Corse Special Edition	848	2012	2013	**163720728** **JTF741.15**	**163721831** **JTR752.39**	**163718333** **JTC525Z3-098RL**	**163722217** **JTA750B**	**JTK001490**
848 Streetfighter	848	2012	2015	**163720728** **JTF741.15**	**163721833** **JTR752.42**	**163718336** **JTC525Z3-104RL**	**163722217** **JTA750B**	**JTK001630**
899 Panigale	899	2014	2015	**163720817** **JTF748.15**	**163722604** **JTR746.44**	**163718273** **JTC520Z3-106RL**		**JTK003920**
900 MH900 e	900	2002	2002	**163720719** **JTF736.15**	**163721810** **JTR735.38**	**163718269** **JTC520Z3-098RL**		**JTK000360**
900 Monster	900	1994	1998	**163720719** **JTF736.15**	**163721811** **JTR735.39**	**163718269** **JTC520Z3-098RL**		**JTK000370**
900 Monster	900	1999	1999	**163720719** **JTF736.15**	**163721810** **JTR735.38**	**163718269** **JTC520Z3-098RL**		**JTK000360**
900 Monster i.e.	900	2000	2001	**163720719** **JTF736.15**	**163721811** **JTR735.39**	**163718269** **JTC520Z3-098RL**		**JTK000370**
900 Monster i.e.	900	2002	2002	**163720719** **JTF736.15**	**163721810** **JTR735.38**	**163718270** **JTC520Z3-100RL**		**JTK000410**
900 SS	900	1998	2002	**163720719** **JTF736.15**	**163721812** **JTR735.40**	**163718269** **JTC520Z3-098RL**		**JTK000380**
900 Super Light	900	1992	1998	**163720719** **JTF736.15**	**163721809** **JTR735.37**	**163718268** **JTC520Z3-096RL**		**JTK000330**
916 Monster S4	916	2001	2003	**163720725** **JTF740.15**	**163721823** **JTR745.37**	**163718334** **JTC525Z3-100RL**		**JTK001500**
916 Monster S4R	916	2004	2006	**163720725** **JTF740.15**	**163721833** **JTR752.42**	**163718336** **JTC525Z3-104RL**	**163722217** **JTA750B**	**JTK001640**
916 Sport Touring ST4	916	1999	2003	**163720725** **JTF740.15**	**163721827** **JTR745.43**	**163718335** **JTC525Z3-102RL**		**JTK001580**
916 SPS Sport Production	916	1994	2000	**163720725** **JTF740.15**	**163721830** **JTR752.36**	**163718331** **JTC525Z3-094RL**	**163722217** **JTA750B**	**JTK001460**
916 Strada Biposto	916	1994	2000	**163720725** **JTF740.15**	**163721830** **JTR752.36**	**163718331** **JTC525Z3-094RL**	**163722217** **JTA750B**	**JTK001460**
939 Hypermotard	939	2016	2017	**163720728** **JTF741.15**	**163722636** **JTR752.43**	**163718337** **JTC525Z3-106RL**	**163722217** **JTA750B**	**JTK003930**

Modello *Model*	CC	Da *From*	A *To*	Pignone Codice RMS - JT *Front Sprocket* *RMS - JT Code*	Corona Codice RMS - JT *Rear Sprocket* *RMS - JT Code*	Catena Codice RMS - JT *Chain* *RMS - JT Code*	Carrier Codice RMS - JT *Carrier* *RMS - JT Code*	Codice Kit *Kit Code*
939 Hypermotard	939	2018	2018	**163720728** **JTF741.15**	**163722636** **JTR752.43**	**163718337** **JTC525Z3-106RL**	**163722217** **JTA750B**	**JTK003930**
939 Hypermotard SP	939	2016	2017	**163720728** **JTF741.15**	**163722636** **JTR752.43**	**163718337** **JTC525Z3-106RL**	**163722217** **JTA750B**	**JTK003930**
939 Hypermotard SP	939	2018	2018	**163720728** **JTF741.15**	**163722636** **JTR752.43**	**163718337** **JTC525Z3-106RL**	**163722217** **JTA750B**	**JTK003930**
939 Hyperstrada	939	2016	2018	**163720728** **JTF741.15**	**163722636** **JTR752.43**	**163718337** **JTC525Z3-106RL**	**163722217** **JTA750B**	**JTK003930**
944 Sport Turismo ST2	944	1997	2003	**163720725** **JTF740.15**	**163721826** **JTR745.42**	**163718335** **JTC525Z3-102RL**		**JTK001550**
950 Multistrada	950	2017	2018	**163720725** **JTF740.15**	**163722641** **JTR765.43**	**163718341** **JTC525Z3-114RL**		**JTK003940**
959 Panigale	959	2016	2017	**163720817** **JTF748.15**	**163722603** **JTR746.43**	**163718273** **JTC520Z3-106RL**		**JTK003950**
959 Panigale	959	2018	2018	**163720817** **JTF748.15**	**163722603** **JTR746.43**	**163718273** **JTC520Z3-106RL**		**JTK003950**
959 Panigale Corse	959	2018	2018	**163720817** **JTF748.15**	**163722603** **JTR746.43**	**163718273** **JTC520Z3-106RL**		**JTK003950**
992 Sport Touring ST3	992	2004	2007	**163720728** **JTF741.15**	**163721826** **JTR745.42**	**163718335** **JTC525Z3-102RL**		**JTK001560**
992 Sport Touring ST3 (ABS)	992	2007	2007	**163720728** **JTF741.15**	**163721826** **JTR745.42**	**163718335** **JTC525Z3-102RL**		**JTK001560**
996 Monster S4R	996	2004	2006	**163720725** **JTF740.15**	**163721833** **JTR752.42**	**163718336** **JTC525Z3-104RL**	**163722217** **JTA750B**	**JTK001640**
996 Sport Touring ST4S	996	2002	2005	**163720725** **JTF740.15**	**163721824** **JTR745.38**	**163718335** **JTC525Z3-102RL**		**JTK001530**
996 Sport Touring ST4S ABS	996	2003	2005	**163720725** **JTF740.15**	**163721824** **JTR745.38**	**163718335** **JTC525Z3-102RL**		**JTK001530**
996 SPS	996	1999	2001	**163720725** **JTF740.15**	**163722349** **JTA752.38**	**163718335** **JTC525Z3-102RL**		**JTK003960**
998	998	2002	2003	**163720728** **JTF741.15**	**163721830** **JTR752.36**	**163718331** **JTC525Z3-094RL**	**163722217** **JTA750B**	**JTK001470**
998 S	998	2002	2002	**163720728** **JTF741.15**	**163721830** **JTR752.36**	**163718331** **JTC525Z3-094RL**	**163722217** **JTA750B**	**JTK001470**
1000 Monster i.e.	1000	2003	2005	**163720728** **JTF741.15**	**163721825** **JTR745.39**	**163718334** **JTC525Z3-100RL**		**JTK001520**
1000 Monster S2R	1000	2005	2005	**163720728** **JTF741.15**	**163721833** **JTR752.42**	**163718336** **JTC525Z3-104RL**	**163722217** **JTA750B**	**JTK001630**
1000 Monster S2R	1000	2006	2008	**163720728** **JTF741.15**	**163721832** **JTR752.41**	**163718336** **JTC525Z3-104RL**	**163722217** **JTA750B**	**JTK001620**
1000 Multistrada DS	1000	2004	2006	**163720728** **JTF741.15**	**163721833** **JTR752.42**	**163718335** **JTC525Z3-102RL**	**163722217** **JTA750B**	**JTK001570**
1000 S Monster i.e.	1000	2004	2005	**163720728** **JTF741.15**	**163721825** **JTR745.39**	**163718334** **JTC525Z3-100RL**		**JTK001520**
1000 S Multistrada DS	1000	2005	2006	**163720728** **JTF741.15**	**163721833** **JTR752.42**	**163718335** **JTC525Z3-102RL**	**163722217** **JTA750B**	**JTK001570**
1000 Sport	1000	2006	2006	**163720728** **JTF741.15**	**163721824** **JTR745.38**	**163718334** **JTC525Z3-100RL**		**JTK001510**
1000 Sport S	1000	2007	2009	**163720728** **JTF741.15**	**163721825** **JTR745.39**	**163718334** **JTC525Z3-100RL**		**JTK001520**
1098	1098	2007	2008	**163720728** **JTF741.15**	**163721834** **JTR761.38**	**163718333** **JTC525Z3-098RL**	**163722218** **JTA760B**	**JTK001480**
1098 R	1098	2008	2009	**163720728** **JTF741.15**	**163721834** **JTR761.38**	**163718333** **JTC525Z3-098RL**	**163722218** **JTA760B**	**JTK001480**
1098 S	1098	2007	2008	**163720728** **JTF741.15**	**163721834** **JTR761.38**	**163718333** **JTC525Z3-098RL**	**163722218** **JTA760B**	**JTK001480**
1099 Steetfighter	1099	2009	2011	**163720728** **JTF741.15**	**163721834** **JTR761.38**	**163718335** **JTC525Z3-102RL**	**163722218** **JTA760B**	**JTK001540**
1099 Steetfighter S	1099	2009	2013	**163720728** **JTF741.15**	**163721834** **JTR761.38**	**163718335** **JTC525Z3-102RL**	**163722218** **JTA760B**	**JTK001540**
1100 Hypermotard	1100	2008	2009	**163720728** **JTF741.15**	**163721833** **JTR752.42**	**163718336** **JTC525Z3-104RL**	**163722217** **JTA750B**	**JTK001630**
1100 Hypermotard Evo / SP Evo	1100	2010	2012	**163720728** **JTF741.15**	**163721832** **JTR752.41**	**163718336** **JTC525Z3-104RL**	**163722217** **JTA750B**	**JTK001620**
1100 Hypermotard Evo SP Corse Edition	1100	2012	2012	**163720728** **JTF741.15**	**163721832** **JTR752.41**	**163718336** **JTC525Z3-104RL**	**163722217** **JTA750B**	**JTK001620**

Modello *Model*	**CC**	**Da** *From*	**A** *To*	**Pignone Codice RMS - JT** *Front Sprocket RMS - JT Code*	**Corona Codice RMS - JT** *Rear Sprocket RMS - JT Code*	**Catena Codice RMS - JT** *Chain RMS - JT Code*	**Carrier Codice RMS - JT** *Carrier RMS - JT Code*	**Codice Kit** *Kit Code*
1100 Monster	1100	2009	2010	**163720728 JTF741.15**	**163721831 JTR752.39**	**163718336 JTC525Z3-104RL**	**163722217 JTA750B**	**JTK001600**
1100 Monster Diesel	1100	2013	2013	**163720728 JTF741.15**	**163721831 JTR752.39**	**163718336 JTC525Z3-104RL**	**163722217 JTA750B**	**JTK001600**
1100 Monster Evo	1100	2011	2013	**163720728 JTF741.15**	**163721831 JTR752.39**	**163718336 JTC525Z3-104RL**	**163722217 JTA750B**	**JTK001600**
1100 Multistrada	1100	2007	2009	**163720728 JTF741.15**	**163721833 JTR752.42**	**163718337 JTC525Z3-106RL**	**163722217 JTA750B**	**JTK001680**
1100 S Hypermotard	1100	2008	2009	**163720728 JTF741.15**	**163721833 JTR752.42**	**163718336 JTC525Z3-104RL**	**163722217 JTA750B**	**JTK001630**
1100 S Monster	1100	2009	2010	**163720728 JTF741.15**	**163721831 JTR752.39**	**163718336 JTC525Z3-104RL**	**163722217 JTA750B**	**JTK001600**
1100 S Multistrada	1100	2007	2009	**163720728 JTF741.15**	**163721833 JTR752.42**	**163718337 JTC525Z3-106RL**	**163722217 JTA750B**	**JTK001680**
1103 Panigale V4	1103	2018	2018	**163720852 JTF749.16**	**163722637 JTR761.41**	**163718341 JTC525Z3-114RL**	**163722218 JTA760B**	**JTK003970**
1103 Panigale V4 Speciale	1103	2018	2018	**163720852 JTF749.16**	**163722637 JTR761.41**	**163718341 JTC525Z3-114RL**	**163722218 JTA760B**	**JTK003970**
1103 Panigale V4S	1103	2018	2018	**163720852 JTF749.16**	**163722637 JTR761.41**	**163718341 JTC525Z3-114RL**	**163722218 JTA760B**	**JTK003970**
1198	1198	2009	2011	**163720728 JTF741.15**	**163721834 JTR761.38**	**163718333 JTC525Z3-098RL**	**163722218 JTA760B**	**JTK001480**
1198 Diavel	1198	2011	2018	**163720728 JTF741.15**	**163722612 JTR761.43**	**163718343 JTC525Z3-118RL**	**163722218 JTA760B**	**JTK003980**
1198 Diavel AMG	1198	2012	2012	**163720728 JTF741.15**	**163722612 JTR761.43**	**163718343 JTC525Z3-118RL**	**163722218 JTA760B**	**JTK003980**
1198 Diavel Carbon	1198	2011	2018	**163720728 JTF741.15**	**163722612 JTR761.43**	**163718343 JTC525Z3-118RL**	**163722218 JTA760B**	**JTK003980**
1198 Diavel Cromo	1198	2012	2014	**163720728 JTF741.15**	**163722612 JTR761.43**	**163718343 JTC525Z3-118RL**	**163722218 JTA760B**	**JTK003980**
1198 Diavel Dark	1198	2013	2015	**163720728 JTF741.15**	**163722612 JTR761.43**	**163718343 JTC525Z3-118RL**	**163722218 JTA760B**	**JTK003980**
1198 Diavel Strada	1198	2013	2015	**163720728 JTF741.15**	**163722612 JTR761.43**	**163718343 JTC525Z3-118RL**	**163722218 JTA760B**	**JTK003980**
1198 Diavel Titanium	1198	2016	2016	**163720728 JTF741.15**	**163722612 JTR761.43**	**163718343 JTC525Z3-118RL**	**163722218 JTA760B**	**JTK003980**
1198 R Corse SE	1198	2010	2011	**163720728 JTF741.15**	**163721834 JTR761.38**	**163718333 JTC525Z3-098RL**	**163722218 JTA760B**	**JTK001480**
1198 S	1198	2009	2010	**163720728 JTF741.15**	**163721834 JTR761.38**	**163718333 JTC525Z3-098RL**	**163722218 JTA760B**	**JTK001480**
1198 S Corse SE	1198	2010	2010	**163720728 JTF741.15**	**163721834 JTR761.38**	**163718333 JTC525Z3-098RL**	**163722218 JTA760B**	**JTK001480**
1198 SP	1198	2011	2011	**163720728 JTF741.15**	**163721834 JTR761.38**	**163718333 JTC525Z3-098RL**	**163722218 JTA760B**	**JTK001480**
1199 Panigale	1199	2012	2015	**163720818 JTF749.15**	**163721835 JTR761.39**	**163718336 JTC525Z3-104RL**	**163722219 JTA770B**	**JTK003990**
1199 Panigale R	1199	2013	2017	**163720818 JTF749.15**	**163722637 JTR761.41**	**163718337 JTC525Z3-106RL**	**163722219 JTA770B**	**JTK004000**
1199 Panigale S	1199	2012	2015	**163720818 JTF749.15**	**163721835 JTR761.39**	**163718336 JTC525Z3-104RL**	**163722219 JTA770B**	**JTK003990**
1199 Panigale S Tricolore	1199	2012	2013	**163720818 JTF749.15**	**163721835 JTR761.39**	**163718336 JTC525Z3-104RL**	**163722219 JTA770B**	**JTK003990**
1199 Superleggeria	1199	2015	2015	**163720818 JTF749.15**	**163722637 JTR761.41**	**163718337 JTC525Z3-106RL**	**163722219 JTA770B**	**JTK004000**
1200 Monster	1200	2014	2018	**163720728 JTF741.15**	**163722637 JTR761.41**	**163718338 JTC525Z3-108RL**	**163722219 JTA770B**	**JTK004010**
1200 Multistrada	1200	2010	2017	**163720815 JTF743.15**	**163722613 JTR763.40**	**163718405 JTC530Z3-108RL**		**JTK004020**
1200 Multistrada DVT	1200	2016	2016	**163720815 JTF743.15**	**163722613 JTR763.40**	**163718405 JTC530Z3-108RL**		**JTK004020**
1200 Multistrada DVT Sport Pack	1200	2016	2016	**163720815 JTF743.15**	**163722613 JTR763.40**	**163718405 JTC530Z3-108RL**		**JTK004020**
1200 Multistrada DVT Urban Pack	1200	2016	2016	**163720815 JTF743.15**	**163722613 JTR763.40**	**163718405 JTC530Z3-108RL**		**JTK004020**
1200 R Monster	1200	2016	2018	**163720728 JTF741.15**	**163722637 JTR761.41**	**163718338 JTC525Z3-108RL**	**163722219 JTA770B**	**JTK004010**

Modello *Model*	**CC**	**Da** *From*	**A** *To*	**Pignone Codice RMS - JT** *Front Sprocket RMS - JT Code*	**Corona Codice RMS - JT** *Rear Sprocket RMS - JT Code*	**Catena Codice RMS - JT** *Chain RMS - JT Code*	**Carrier Codice RMS - JT** *Carrier RMS - JT Code*	**Codice Kit** *Kit Code*
1200 S Monster	1200	2014	2018	**163720728 JTF741.15**	**163722637 JTR761.41**	**163718338 JTC525Z3-108RL**	**163722219 JTA770B**	**JTK004010**
1200 S Monster Stripe	1200	2016	2016	**163720728 JTF741.15**	**163722637 JTR761.41**	**163718338 JTC525Z3-108RL**	**163722219 JTA770B**	**JTK004010**
1200 S Multistrada	1200	2010	2017	**163720815 JTF743.15**	**163722613 JTR763.40**	**163718405 JTC530Z3-108RL**		**JTK004020**
1200 S Multistrada D-Air	1200	2017	2017	**163720815 JTF743.15**	**163722613 JTR763.40**	**163718405 JTC530Z3-108RL**		**JTK004020**
1200 S Multistrada DVT	1200	2016	2016	**163720815 JTF743.15**	**163722613 JTR763.40**	**163718405 JTC530Z3-108RL**		**JTK004020**
1200 S Multistrada DVT Urban Pack	1200	2016	2016	**163720815 JTF743.15**	**163722613 JTR763.40**	**163718405 JTC530Z3-108RL**		**JTK004020**
1200 S Multistrada GT	1200	2010	2016	**163720815 JTF743.15**	**163722613 JTR763.40**	**163718405 JTC530Z3-108RL**		**JTK004020**
1200 S Multistrada Pikes Peak	1200	2012	2017	**163720815 JTF743.15**	**163722613 JTR763.40**	**163718405 JTC530Z3-108RL**		**JTK004020**
1200 S Multistrada Touring	1200	2010	2017	**163720815 JTF743.15**	**163722613 JTR763.40**	**163718405 JTC530Z3-108RL**		**JTK004020**
1200 S Multistrada Touring D-Air	1200	2015	2017	**163720815 JTF743.15**	**163722613 JTR763.40**	**163718405 JTC530Z3-108RL**		**JTK004020**
1200 S Multistrada Touring D-Air DVT	1200	2016	2016	**163720815 JTF743.15**	**163722613 JTR763.40**	**163718405 JTC530Z3-108RL**		**JTK004020**
1299 Panigale	1299	2015	2017	**163720818 JTF749.15**	**163721835 JTR761.39**	**163718336 JTC525Z3-104RL**	**163722219 JTA770B**	**JTK003990**
1299 Panigale R Final Edition	1299	2018	2018	**163720818 JTF749.15**	**163721835 JTR761.39**	**163718336 JTC525Z3-104RL**	**163722219 JTA770B**	**JTK003990**
1299 Panigale S	1299	2015	2017	**163720818 JTF749.15**	**163721835 JTR761.39**	**163718336 JTC525Z3-104RL**	**163722219 JTA770B**	**JTK003990**
HONDA								
CB125 F (GLR125)	125	2015	2017	**163720048 JTF1264.15**	**163722596 JTR1221.45**	**163718542 JTC428HPOGB122SL**		**JTK004030**
CBF125	125	2009	2014	**163720049 JTF1264.16**	**163721061 JTR1219.42**	**163718068 JTC428HDR118SL**		**JTK000220**
CBR125 R	125	2004	2010	**163720048 JTF1264.15**	**163721047 JTR1206.42**	**163718071 JTC428HDR124SL**		**JTK000230**
CBR125 R	125	2011	2017	**163720048 JTF1264.15**	**163721065 JTR1221.44**	**163718073 JTC428HDR128SL**		**JTK000260**
CR	125	2004	2007	**163720079 JTF1323.13SC**	**163721354 JTR210.52**	**163718139 JTC520HDR116SL**		**JTK003720**
CRF	250	2011	2017	**163720079 JTF1323.13SC**	**163721351 JTR210.49**	**163718190 JTC520X1R116DL**		**JTK003710**
CRF	250	2018	2018	**163720838 JTF1344.13SC**	**163721351 JTR210.49**	**163718190 JTC520X1R116DL**		**JTK003670**
VFR400 R3	400	1990	1993	**163720351 JTF297.15**	**163721575 JTR312.40**	**163718317 JTC525X1R108RL**		**JTK001720**
CRF R	450	2004	2018	**163720316 JTF284.13SC**	**163721350 JTR210.48**	**163718163 JTC520HDSNN116SL**		**JTK003690**
CB500	500	1994	2003	**163720351 JTF297.15**	**163721108 JTR1332.40**	**163718317 JTC525X1R108RL**		**JTK001730**
CB500 F	500	2013	2018	**163720111 JTF1381.15**	**163721104 JTR1316.41**	**163718254 JTC520X1R2-112DL**		**JTK000940**
CB500 X/XA	500	2013	2018	**163720111 JTF1381.15**	**163721104 JTR1316.41**	**163718254 JTC520X1R2-112DL**		**JTK000940**
CBF500	500	2004	2008	**163720351 JTF297.15**	**163721078 JTR1304.41**	**163718321 JTC525X1R116RL**		**JTK002330**
CBF500 ABS	500	2004	2008	**163720351 JTF297.15**	**163721078 JTR1304.41**	**163718321 JTC525X1R116RL**		**JTK002330**
CBR500 R/RA	500	2013	2018	**163720111 JTF1381.15**	**163721104 JTR1316.41**	**163718388 JTC530X1R112RL**		**JTK004040**
CB600 F Hornet	600	1998	2006	**163720106 JTF1371.15**	**163721079 JTR1304.42**	**163718318 JTC525X1R110RL**		**JTK001910**
CB600 F Hornet	600	1998	2006	**163720750 JTF1371.15RB**	**163722440 JTR1304.42ZBK**	**163718327 JTC525Z3NN110RL**		**JTPRO1910**
CB600 F Hornet	600	2007	2013	**163720104 JTF1370.16**	**163721080 JTR1304.43**	**163718343 JTC525Z3-118RL**		**JTK002540**
CB600 S F2	600	2003	2006	**163720750 JTF1371.15RB**	**163722440 JTR1304.42ZBK**	**163718327 JTC525Z3NN110RL**		**JTPRO1910**

Modello *Model*	**CC**	**Da** *From*	**A** *To*	**Pignone Codice RMS - JT** *Front Sprocket RMS - JT Code*	**Corona Codice RMS - JT** *Rear Sprocket RMS - JT Code*	**Catena Codice RMS - JT** *Chain RMS - JT Code*	**Carrier Codice RMS - JT** *Carrier RMS - JT Code*	**Codice Kit** *Kit Code*
CB600 S F2 Hornet	600	2000	2003	**163720106 JTF1371.15**	**163721079 JTR1304.42**	**163718318 JTC525X1R110RL**		**JTK001910**
CBF600 N	600	2004	2007	**163720106 JTF1371.15**	**163721080 JTR1304.43**	**163718321 JTC525X1R116RL**		**JTK002340**
CBF600 N/NA	600	2008	2011	**163720104 JTF1370.16**	**163721079 JTR1304.42**	**163718325 JTC525X1R124RL**		**JTK002740**
CBF600 S ABS	600	2004	2005	**163720106 JTF1371.15**	**163721080 JTR1304.43**	**163718321 JTC525X1R116RL**		**JTK002340**
CBF600 S Cowl ABS	600	2006	2007	**163720106 JTF1371.15**	**163721080 JTR1304.43**	**163718321 JTC525X1R116RL**		**JTK002340**
CBF600 S/SA ABS	600	2008	2012	**163720104 JTF1370.16**	**163721079 JTR1304.42**	**163718325 JTC525X1R124RL**		**JTK002740**
CBR600	600	1991	1996	**163720346 JTF295.15**	**163721571 JTR302.43**	**163718386 JTC530X1R108RL**		**JTK002900**
CBR600 F	600	2001	2001	**163720104 JTF1370.16**	**163721092 JTR1307.45**	**163718319 JTC525X1R112RL**		**JTK002130**
CBR600 F	600	2002	2007	**163720104 JTF1370.16**	**163721092 JTR1307.45**	**163718317 JTC525X1R108RL**		**JTK001840**
CBR600 F	600	2011	2014	**163720104 JTF1370.16**	**163721080 JTR1304.43**	**163718343 JTC525Z3-118RL**		**JTK002540**
CBR600 FS Sport	600	2001	2002	**163720104 JTF1370.16**	**163721093 JTR1307.46**	**163718319 JTC525X1R112RL**		**JTK002140**
CBR600 FV,FW	600	1997	1998	**163720106 JTF1371.15**	**163721080 JTR1304.43**	**163718318 JTC525X1R110RL**		**JTK001920**
CBR600 FX,FY	600	1999	2000	**163720104 JTF1370.16**	**163721081 JTR1304.44**	**163718317 JTC525X1R108RL**		**JTK001830**
CBR600 RA	600	2010	2016	**163720104 JTF1370.16**	**163721088 JTR1307.41**	**163718319 JTC525X1R112RL**		**JTK002100**
CBR600 RR	600	2003	2006	**163720104 JTF1370.16**	**163721089 JTR1307.42**	**163718319 JTC525X1R112RL**		**JTK002110**
CBR600 RR	600	2007	2016	**163720104 JTF1370.16**	**163721088 JTR1307.41**	**163718319 JTC525X1R112RL**		**JTK002100**
CBR600 RR C-ABS	600	2010	2015	**163720104 JTF1370.16**	**163721088 JTR1307.41**	**163718340 JTC525Z3-112RL**		**JTK002090**
VT600 C Shadow	600	1990	2007	**163720349 JTF296.16**	**163721112 JTR1332.44**	**163718323 JTC525X1R120RL**		**JTK002640**
VT600 CD Shadow Deluxe	600	1994	2000	**163720349 JTF296.16**	**163721112 JTR1332.44**	**163718323 JTC525X1R120RL**		**JTK002640**
VT600 CD/CD2 Shadow Deluxe	600	2001	2007	**163720349 JTF296.16**	**163721112 JTR1332.44**	**163718323 JTC525X1R120RL**		**JTK002640**
XL600 V Transalp	600	1991	2000	**163720348 JTF296.15**	**163721561 JTR300.47**	**163718323 JTC525X1R120RL**		**JTK002620**
CB650 F / FA	650	2014	2018	**163720103 JTF1370.15**	**163721079 JTR1304.42**	**163718343 JTC525Z3-118RL**		**JTK002450**
CBR650 F / FA	650	2014	2018	**163720103 JTF1370.15**	**163721079 JTR1304.42**	**163718343 JTC525Z3-118RL**		**JTK002450**
FMX650	650	2005	2008	**163720356 JTF308.14**	**163721428 JTR245/3.42**	**163718275 JTC520Z3-110RL**		**JTK000730**
FX650 Vigor	650	1999	2001	**163720356 JTF308.14**	**163721429 JTR245/3.43**	**163718274 JTC520Z3-108RL**		**JTK000650**
NX650 Dominator	650	1995	2001	**163720357 JTF308.15**	**163722601 JTR305.46**	**163718253 JTC520X1R2-110DL**		**JTK004050**
XL650 V Transalp	650	2001	2007	**163720348 JTF296.15**	**163721562 JTR300.48**	**163718322 JTC525X1R118RL**		**JTK002490**
XL650 V Transalp	650	2001	2008	**163720770 JTF296.15RB**	**163721562 JTR300.48**	**163718307 JTC525X1RNN118RL**		**JTPRO2490**
XRV650 Africa Twin	650	1988	1990	**163720349 JTF296.16**	**163721563 JTR300.49**	**163718325 JTC525X1R124RL**		**JTK002770**
CTX700 DCT	700	2014	2018	**163720109 JTF1373.16**	**163722621 JTR1316.39**	**163718255 JTC520X1R2-114DL**		**JTK004060**
CTX700 N DCT	700	2014	2018	**163720109 JTF1373.16**	**163722622 JTR1316.43**	**163718255 JTC520X1R2-114DL**		**JTK004070**
NC700 D Integra	700	2012	2013	**163720109 JTF1373.16**	**163722437 JTR1303.39ZBK**	**163718276 JTC520Z3-112RL**		**JTK001000**
NC700 S/SA	700	2012	2013	**163720109 JTF1373.16**	**163722622 JTR1316.43**	**163718255 JTC520X1R2-114DL**		**JTK004070**

Modello *Model*	CC	Da *From*	A *To*	Pignone Codice RMS - JT *Front Sprocket* *RMS - JT Code*	Corona Codice RMS - JT *Rear Sprocket* *RMS - JT Code*	Catena Codice RMS - JT *Chain* *RMS - JT Code*	Carrier Codice RMS - JT *Carrier* *RMS - JT Code*	Codice Kit *Kit Code*
NC700 X/XA	700	2012	2013	**163720109** **JTF1373.16**	**163722622** **JTR1316.43**	**163718255** **JTC520X1R2-114DL**		**JTK004070**
NC700 X/XA	700	2014	2015	**163720109** **JTF1373.16**	**163722622** **JTR1316.43**	**163718255** **JTC520X1R2-114DL**		**JTK004070**
XL700 V/VA Transalp	700	2008	2013	**163720348** **JTF296.15**	**163721561** **JTR300.47**	**163718343** **JTC525Z3-118RL**		**JTK002460**
XL700 V/VA Transalp	700	2008	2013	**163720770** **JTF296.15RB**	**163722519** **JTR300.47ZBK**	**163718531** **JTC525Z3NN118RL**		**JTPRO2460**
750 Adv	750	2017	2017	**163720110** **JTF1373.17**	**163722620** **JTR1316.38**	**163718257** **JTC520X1R2-118DL**		**JTK004080**
750 Integra DCT	750	2014	2015	**163720110** **JTF1373.17**	**163721075** **JTR1303.43**	**163718277** **JTC520Z3-114RL**		**JTK001160**
750 X-Adv	750	2017	2018	**163720110** **JTF1373.17**	**163722620** **JTR1316.38**	**163718257** **JTC520X1R2-118DL**		**JTK004080**
CB750 F2	750	1992	2003	**163720092** **JTF1332.15**	**163721108** **JTR1332.40**	**163718319** **JTC525X1R112RL**		**JTK002050**
NC750 S DCT	750	2014	2016	**163720110** **JTF1373.17**	**163722621** **JTR1316.39**	**163718254** **JTC520X1R2-112DL**		**JTK004090**
NC750 S/SA ABS	750	2014	2018	**163720110** **JTF1373.17**	**163722622** **JTR1316.43**	**163718255** **JTC520X1R2-114DL**		**JTK004100**
NC750 X	750	2014	2015	**163720110** **JTF1373.17**	**163721075** **JTR1303.43**	**163718277** **JTC520Z3-114RL**		**JTK001160**
NC750 X DCT	750	2014	2015	**163720110** **JTF1373.17**	**163721075** **JTR1303.43**	**163718277** **JTC520Z3-114RL**		**JTK001160**
NC750 X/XA	750	2014	2017	**163720110** **JTF1373.17**	**163722622** **JTR1316.43**	**163718255** **JTC520X1R2-114DL**		**JTK004100**
NC750 XA ABS	750	2018	2018	**163720110** **JTF1373.17**	**163722622** **JTR1316.43**	**163718255** **JTC520X1R2-114DL**		**JTK004100**
NC750 XD	750	2014	2017	**163720110** **JTF1373.17**	**163722621** **JTR1316.39**	**163718254** **JTC520X1R2-112DL**		**JTK004090**
NC750 XD DCT	750	2018	2018	**163720110** **JTF1373.17**	**163722621** **JTR1316.39**	**163718254** **JTC520X1R2-112DL**		**JTK004090**
VF750 C V45 Magna	750	1994	2004	**163720392** **JTF333.16**	**163721119** **JTR1334.40**	**163718391** **JTC530X1R118RL**		**JTK003520**
VF750 CD/CD2 V45 Magna Deluxe	750	1995	2004	**163720392** **JTF333.16**	**163721119** **JTR1334.40**	**163718391** **JTC530X1R118RL**		**JTK003520**
VFR750	750	1990	1998	**163720392** **JTF333.16**	**163721127** **JTR1340.43**	**163718388** **JTC530X1R112RL**		**JTK003150**
VT750 C Shadow	750	2004	2007	**163720107** **JTF1372.17**	**163721078** **JTR1304.41**	**163718324** **JTC525X1R122RL**		**JTK002720**
VT750 C,CD Shadow	750	1998	2003	**163720107** **JTF1372.17**	**163721078** **JTR1304.41**	**163718324** **JTC525X1R122RL**		**JTK002720**
VT750 C2 Shadow	750	2000	2003	**163720107** **JTF1372.17**	**163721078** **JTR1304.41**	**163718324** **JTC525X1R122RL**		**JTK002720**
VT750 CD2 Shadow Deluxe	750	1998	2003	**163720107** **JTF1372.17**	**163721078** **JTR1304.41**	**163718324** **JTC525X1R122RL**		**JTK002720**
VT750 DC Black Widow	750	2000	2003	**163720107** **JTF1372.17**	**163721078** **JTR1304.41**	**163718324** **JTC525X1R122RL**		**JTK002720**
VT750 DC Shadow Spirit	750	2001	2007	**163720107** **JTF1372.17**	**163721079** **JTR1304.42**	**163718324** **JTC525X1R122RL**		**JTK002730**
VT750 S	750	2011	2013	**163720107** **JTF1372.17**	**163721076** **JTR1304.38**	**163718319** **JTC525X1R112RL**		**JTK002160**
XRV750 Africa Twin	750	1990	1992	**163720363** **JTF314.16**	**163721114** **JTR1332.46**	**163718325** **JTC525X1R124RL**		**JTK002760**
XRV750 Africa Twin	750	1993	2003	**163720363** **JTF314.16**	**163721113** **JTR1332.45**	**163718325** **JTC525X1R124RL**		**JTK002750**
XRV750 Africa Twin	750	1993	2003	**163720775** **JTF314.16RB**	**163722452** **JTR1332.45ZBK**	**163718330** **JTC525Z3NN124RL**		**JTPRO2750**
VFR800 F Interceptor VTEC (ABS)	800	2014	2017	**163720093** **JTF1332.16**	**163721130** **JTR1346.43**	**163718339** **JTC525Z3-110RL**		**JTK004110**
VFR800 F1	800	1998	1999	**163720402** **JTF339.17**	**163721127** **JTR1340.43**	**163718405** **JTC530Z3-108RL**		**JTK002960**
VFR800 F1 Interceptor VTEC	800	2002	2013	**163720401** **JTF339.16**	**163721127** **JTR1340.43**	**163718406** **JTC530Z3-110RL**		**JTK003040**
VFR800 F1 Interceptor VTEC (ABS)	800	2002	2013	**163720401** **JTF339.16**	**163721127** **JTR1340.43**	**163718406** **JTC530Z3-110RL**		**JTK003040**

Modello *Model*	**CC**	**Da** *From*	**A** *To*	**Pignone Codice RMS - JT** *Front Sprocket RMS - JT Code*	**Corona Codice RMS - JT** *Rear Sprocket RMS - JT Code*	**Catena Codice RMS - JT** *Chain RMS - JT Code*	**Carrier Codice RMS - JT** *Carrier RMS - JT Code*	**Codice Kit** *Kit Code*
VFR800 F1 PGM & CBS	800	2000	2001	**163720402 JTF339.17**	**163721127 JTR1340.43**	**163718405 JTC530Z3-108RL**		**JTK002960**
VFR800 X Crossrunner	800	2011	2014	**163720401 JTF339.16**	**163721127 JTR1340.43**	**163718409 JTC530Z3-116RL**		**JTK003420**
VFR800 X Crossrunner	800	2015	2017	**163720093 JTF1332.16**	**163721130 JTR1346.43**	**163718339 JTC525Z3-110RL**		**JTK004110**
CB900 F Hornet	900	2002	2006	**163720392 JTF333.16**	**163721571 JTR302.43**	**163718408 JTC530Z3-114RL**		**JTK003260**
CBR900 RR Fire Blade	900	1992	1995	**163720392 JTF333.16**	**163721570 JTR302.42**	**163718405 JTC530Z3-108RL**		**JTK002930**
CBR900 RR Fire Blade	900	1996	1999	**163720104 JTF1370.16**	**163721079 JTR1304.42**	**163718338 JTC525Z3-108RL**		**JTK001800**
CBR900 RR Fire Blade	900	2000	2003	**163720392 JTF333.16**	**163721086 JTR1306.42**	**163718405 JTC530Z3-108RL**		**JTK002940**
CB1000 R/RA (ABS)	1000	2008	2016	**163720392 JTF333.16**	**163721128 JTR1340.44**	**163718409 JTC530Z3-116RL**		**JTK003430**
CBF1000	1000	2011	2015	**163720392 JTF333.16**	**163721569 JTR302.41**	**163718411 JTC530Z3-120RL**		**JTK004120**
CBF1000 F	1000	2011	2015	**163720392 JTF333.16**	**163721569 JTR302.41**	**163718411 JTC530Z3-120RL**		**JTK004120**
CBF1000 F	1000	2016	2016	**163720392 JTF333.16**	**163721569 JTR302.41**	**163718411 JTC530Z3-120RL**		**JTK004120**
CBF1000 F/FA	1000	2006	2010	**163720392 JTF333.16**	**163721571 JTR302.43**	**163718411 JTC530Z3-120RL**		**JTK003600**
CBF1000 FS (ABS)	1000	2010	2010	**163720392 JTF333.16**	**163721569 JTR302.41**	**163718411 JTC530Z3-120RL**		**JTK004120**
CBR1000 RR Fireblade	1000	2004	2005	**163720392 JTF333.16**	**163721084 JTR1306.40**	**163718408 JTC530Z3-114RL**		**JTK003230**
CBR1000 RR Fireblade	1000	2006	2007	**163720392 JTF333.16**	**163721086 JTR1306.42**	**163718408 JTC530Z3-114RL**		**JTK003250**
CBR1000 RR Fireblade	1000	2008	2016	**163720392 JTF333.16**	**163721086 JTR1306.42**	**163718409 JTC530Z3-116RL**		**JTK003410**
CBR1000 RR Fireblade	1000	2017	2017	**163720104 JTF1370.16**	**163722623 JTR1317.43**	**163718342 JTC525Z3-116RL**		**JTK004130**
CBR1000 RR Fireblade	1000	2018	2018	**163720104 JTF1370.16**	**163722623 JTR1317.43**	**163718342 JTC525Z3-116RL**		**JTK004130**
CBR1000 SP	1000	2017	2018	**163720104 JTF1370.16**	**163722623 JTR1317.43**	**163718342 JTC525Z3-116RL**		**JTK004130**
CBR1000 SP2	1000	2017	2018	**163720104 JTF1370.16**	**163722623 JTR1317.43**	**163718342 JTC525Z3-116RL**		**JTK004130**
CRF1000 Africa Twin	1000	2018	2018	**163720104 JTF1370.16**	**163722640 JTR1331.42ZBK**	**163718346 JTC525Z3-124RL**		**JTK004140**
CRF1000 Africa Twin Adventure Sport	1000	2018	2018	**163720104 JTF1370.16**	**163722640 JTR1331.42ZBK**	**163718346 JTC525Z3-124RL**		**JTK004140**
CRF1000 Africa Twin DCT	1000	2018	2018	**163720104 JTF1370.16**	**163722640 JTR1331.42ZBK**	**163718346 JTC525Z3-124RL**		**JTK004140**
VTR1000 F Fire Storm	1000	1997	2005	**163720392 JTF333.16**	**163721569 JTR302.41**	**163718402 JTC530Z3-102RL**		**JTK002790**
VTR1000 SP-1	1000	2000	2001	**163720392 JTF333.16**	**163721084 JTR1306.40**	**163718403 JTC530Z3-104RL**		**JTK002810**
VTR1000 SP-2	1000	2002	2006	**163720392 JTF333.16**	**163721084 JTR1306.40**	**163718404 JTC530Z3-106RL**		**JTK002840**
XL1000 V Varadero	1000	1999	2013	**163720104 JTF1370.16**	**163721083 JTR1304.47**	**163718340 JTC525Z3-112RL**		**JTK002150**
CB1100	1100	2013	2013	**163720403 JTF339.18**	**163721568 JTR302.39**	**163718406 JTC530Z3-110RL**		**JTK003120**
CB1100 SF X	1100	2000	2003	**163720402 JTF339.17**	**163721571 JTR302.43**	**163718406 JTC530Z3-110RL**		**JTK003100**
CBR1100 XX Blackbird	1100	1997	2007	**163720402 JTF339.17**	**163721572 JTR302.44**	**163718406 JTC530Z3-110RL**		**JTK003110**
CB X	1300	1997	1999	**163720403 JTF339.18**	**163721569 JTR302.41**	**163718412 JTC530Z3-122RL**		**JTK003640**
CB1300 F	1300	2003	2009	**163720403 JTF339.18**	**163721568 JTR302.39**	**163718408 JTC530Z3-114RL**		**JTK003320**
CB1300 S	1300	2006	2009	**163720403 JTF339.18**	**163721568 JTR302.39**	**163718408 JTC530Z3-114RL**		**JTK003320**

Modello *Model*	CC	Da *From*	A *To*	Pignone Codice RMS - JT *Front Sprocket* *RMS - JT Code*	Corona Codice RMS - JT *Rear Sprocket* *RMS - JT Code*	Catena Codice RMS - JT *Chain* *RMS - JT Code*	Carrier Codice RMS - JT *Carrier* *RMS - JT Code*	Codice Kit *Kit Code*
CB1300 S/SA	1300	2010	2013	**163720403** **JTF339.18**	**163721568** **JTR302.39**	**163718408** **JTC530Z3-114RL**		**JTK003320**
KAWASAKI								
EX250R Ninja 250 R	250	2008	2012	**163720177** **JTF1539.14**	**163721679** **JTR486.43**	**163718251** **JTC520X1R2-106DL**		**JTK000530**
EX250R Ninja 250 R Special Edition	250	2012	2012	**163720177** **JTF1539.14**	**163721679** **JTR486.43**	**163718251** **JTC520X1R2-106DL**		**JTK000530**
GPX250 R	250	1988	2005	**163720558** **JTF516.14**	**163721681** **JTR486.45**	**163718134** **JTC520HDR106SL**		**JTK000540**
KLX250 R	250	1993	1999	**163720651** **JTF569.14**	**163721601** **JTR460.50**	**163718253** **JTC520X1R2-110DL**		**JTK000750**
EX300 Ninja 300	300	2013	2017	**163720177** **JTF1539.14**	**163721678** **JTR486.42**	**163718251** **JTC520X1R2-106DL**		**JTK000520**
EX300 Ninja 300 ABS KRT Edition	300	2016	2017	**163720177** **JTF1539.14**	**163721678** **JTR486.42**	**163718251** **JTC520X1R2-106DL**		**JTK000520**
EX300 Ninja 300 ABS SE	300	2013	2017	**163720177** **JTF1539.14**	**163721678** **JTR486.42**	**163718251** **JTC520X1R2-106DL**		**JTK000520**
EX300 Ninja 300 ABS Winter Test Edition	300	2016	2017	**163720177** **JTF1539.14**	**163721678** **JTR486.42**	**163718251** **JTC520X1R2-106DL**		**JTK000520**
EX300 Ninja 300 SE	300	2014	2016	**163720177** **JTF1539.14**	**163721678** **JTR486.42**	**163718251** **JTC520X1R2-106DL**		**JTK000520**
KLE300 Versys-X	300	2017	2017	**163720177** **JTF1539.14**	**163722634** **JTR486.46**	**163718254** **JTC520X1R2-112DL**		**JTK004150**
KLE300 Versys-X (ABS)	300	2017	2018	**163720177** **JTF1539.14**	**163722634** **JTR486.46**	**163718254** **JTC520X1R2-112DL**		**JTK004150**
KLX300 (KLX300R)	300	1997	2002	**163720651** **JTF569.14**	**163721601** **JTR460.50**	**163718253** **JTC520X1R2-110DL**		**JTK000750**
KLX300 (KLX300R)	300	2003	2007	**163720631** **JTF565.14SC**	**163721601** **JTR460.50**	**163718253** **JTC520X1R2-110DL**		**JTK000930**
Z300	300	2015	2017	**163720177** **JTF1539.14**	**163721678** **JTR486.42**	**163718251** **JTC520X1R2-106DL**		**JTK000520**
GPZ400	400	1984	1997	**163720548** **JTF512.16**	**163721172** **JTR1478.42**	**163718251** **JTC520X1R2-106DL**		**JTK000610**
ZXR400 (ZX-4)	400	1988	2002	**163720547** **JTF512.15**	**163721655** **JTR478.45**	**163718253** **JTC520X1R2-110DL**		**JTK000790**
KLX450 R	450	2008	2019	**163720193** **JTF1565.13SC**	**163721601** **JTR460.50**	**163718255** **JTC520X1R2-114DL**		**JTK001170**
EN500 Vulcan	500	1996	2005	**163720548** **JTF512.16**	**163721188** **JTR1490.42**	**163718253** **JTC520X1R2-110DL**		**JTK000840**
EN500 Vulcan 500 Ltd	500	2006	2009	**163720548** **JTF512.16**	**163721188** **JTR1490.42**	**163718253** **JTC520X1R2-110DL**		**JTK000840**
ER500 (ER-5)	500	1997	2006	**163720549** **JTF512.17**	**163721678** **JTR486.42**	**163718251** **JTC520X1R2-106DL**		**JTK000630**
EX500 Ninja 500R	500	2006	2009	**163720548** **JTF512.16**	**163721677** **JTR486.41**	**163718250** **JTC520X1R2-104DL**		**JTK000510**
GPZ500 S	500	1994	2005	**163720548** **JTF512.16**	**163721677** **JTR486.41**	**163718250** **JTC520X1R2-104DL**		**JTK000510**
KLE500	500	1991	1996	**163720548** **JTF512.16**	**163721686** **JTR487.44**	**163718252** **JTC520X1R2-108DL**		**JTK000690**
KLE500	500	1997	2005	**163720549** **JTF512.17**	**163721688** **JTR487.46**	**163718253** **JTC520X1R2-110DL**		**JTK000920**
KLE500	500	2006	2007	**163720549** **JTF512.17**	**163721686** **JTR487.44**	**163718253** **JTC520X1R2-110DL**		**JTK000910**
ZX-6R (ZX600) Ninja	600	1995	1997	**163720156** **JTF1515.15**	**163721704** **JTR498.40**	**163718317** **JTC525X1R108RL**		**JTK001750**
ZX-6R (ZX600) Ninja	600	1998	2002	**163720164** **JTF1535.15**	**163721182** **JTR1489.40**	**163718317** **JTC525X1R108RL**		**JTK001740**
ZX-6R (ZX600) Ninja	600	2007	2015	**163720167** **JTF1536.16**	**163721654** **JTR478.43**	**163718276** **JTC520Z3-112RL**		**JTK001010**
ZX-6R (ZX600) Ninja Performance	600	2011	2012	**163720167** **JTF1536.16**	**163721654** **JTR478.43**	**163718276** **JTC520Z3-112RL**		**JTK001010**
ZX-6RR (ZX600) Ninja	600	2003	2004	**163720065** **JTF1307.15**	**163721171** **JTR1478.40**	**163718274** **JTC520Z3-108RL**		**JTK000660**
ZX-6RR (ZX600) Ninja	600	2005	2006	**163720065** **JTF1307.15**	**163721654** **JTR478.43**	**163718275** **JTC520Z3-110RL**		**JTK000760**
ZZ-R600 (ZX600)	600	1993	2004	**163720571** **JTF519.16**	**163721716** **JTR499.48**	**163718388** **JTC530X1R112RL**		**JTK003160**

Modello *Model*	**CC**	**Da** *From*	**A** *To*	**Pignone Codice RMS - JT** *Front Sprocket RMS - JT Code*	**Corona Codice RMS - JT** *Rear Sprocket RMS - JT Code*	**Catena Codice RMS - JT** *Chain RMS - JT Code*	**Carrier Codice RMS - JT** *Carrier RMS - JT Code*	**Codice Kit** *Kit Code*
ZZ-R600 (ZX600)	600	2005	2008	**163720164 JTF1535.15**	**163721182 JTR1489.40**	**163718317 JTC525X1R108RL**		**JTK001740**
ZX-6R (ZX636) Ninja	636	2002	2002	**163720164 JTF1535.15**	**163721182 JTR1489.40**	**163718338 JTC525Z3-108RL**		**JTK001760**
ZX-6R (ZX636) Ninja	636	2003	2004	**163720065 JTF1307.15**	**163721171 JTR1478.40**	**163718274 JTC520Z3-108RL**		**JTK000660**
ZX-6R (ZX636) Ninja	636	2005	2006	**163720065 JTF1307.15**	**163721654 JTR478.43**	**163718275 JTC520Z3-110RL**		**JTK000760**
ZX-6R (ZX636) Ninja	636	2013	2017	**163720167 JTF1536.16**	**163721654 JTR478.43**	**163718276 JTC520Z3-112RL**		**JTK001010**
ZX-6R (ZX636) Ninja ABS	636	2013	2017	**163720167 JTF1536.16**	**163721654 JTR478.43**	**163718276 JTC520Z3-112RL**		**JTK001010**
ZX-6R (ZX636) Ninja KRT Edition	636	2016	2017	**163720167 JTF1536.16**	**163721654 JTR478.43**	**163718276 JTC520Z3-112RL**		**JTK001010**
650 Vulcan-S ABS	650	2015	2015	**163720632 JTF565.15**	**163721656 JTR478.46**	**163718280 JTC520Z3-120RL**		**JTK001270**
EN650 Vulcan-S	650	2015	2017	**163720632 JTF565.15**	**163721656 JTR478.46**	**163718258 JTC520X1R2-120DL**		**JTK004160**
EN650 Vulcan-S ABS	650	2015	2018	**163720632 JTF565.15**	**163721656 JTR478.46**	**163718258 JTC520X1R2-120DL**		**JTK004160**
EN650 Vulcan-S Cafe ABS	650	2015	2018	**163720632 JTF565.15**	**163721656 JTR478.46**	**163718258 JTC520X1R2-120DL**		**JTK004160**
ER-6f (EX650)	650	2006	2016	**163720632 JTF565.15**	**163721656 JTR478.46**	**163718277 JTC520Z3-114RL**		**JTK001110**
ER-6f (EX650)	650	2006	2016	**163720793 JTF565.15RB**	**163722530 JTR478.46ZBK**	**163718233 JTC520X1R2NN114DL**		**JTPRO1110**
ER-6n (ER650)	650	2006	2016	**163720632 JTF565.15**	**163721656 JTR478.46**	**163718277 JTC520Z3-114RL**		**JTK001110**
ER-6n (ER650)	650	2006	2016	**163720793 JTF565.15RB**	**163722530 JTR478.46ZBK**	**163718233 JTC520X1R2NN114DL**		**JTPRO1110**
EX650 Ninja 650 ABS	650	2017	2018	**163720632 JTF565.15**	**163721656 JTR478.46**	**163718255 JTC520X1R2-114DL**		**JTK004170**
KLE650 Versys	650	2007	2015	**163720793 JTF565.15RB**	**163722530 JTR478.46ZBK**	**163718233 JTC520X1R2NN114DL**		**JTPRO1110**
KLE650 Versys	650	2007	2018	**163720632 JTF565.15**	**163721656 JTR478.46**	**163718277 JTC520Z3-114RL**		**JTK001110**
KLE650 Versys ABS	650	2007	2011	**163720632 JTF565.15**	**163721656 JTR478.46**	**163718277 JTC520Z3-114RL**		**JTK001110**
KLE650 Versys ABS	650	2007	2011	**163720793 JTF565.15RB**	**163722530 JTR478.46ZBK**	**163718233 JTC520X1R2NN114DL**		**JTPRO1110**
KLE650 Versys City	650	2011	2011	**163720632 JTF565.15**	**163721656 JTR478.46**	**163718277 JTC520Z3-114RL**		**JTK001110**
KLE650 Versys City	650	2011	2011	**163720793 JTF565.15RB**	**163722530 JTR478.46ZBK**	**163718233 JTC520X1R2NN114DL**		**JTPRO1110**
KLE650 Versys LT	650	2016	2016	**163720632 JTF565.15**	**163721656 JTR478.46**	**163718255 JTC520X1R2-114DL**		**JTK004170**
KLE650 Versys Tourer	650	2011	2011	**163720632 JTF565.15**	**163721656 JTR478.46**	**163718277 JTC520Z3-114RL**		**JTK001110**
KLE650 Versys Tourer	650	2011	2011	**163720793 JTF565.15RB**	**163722530 JTR478.46ZBK**	**163718233 JTC520X1R2NN114DL**		**JTPRO1110**
KLR650 (KL650)	650	1990	2017	**163720543 JTF511.15**	**163721685 JTR487.43**	**163718273 JTC520Z3-106RL**		**JTK000560**
KLR650 Camo (KL650)	650	2017	2017	**163720543 JTF511.15**	**163721685 JTR487.43**	**163718251 JTC520X1R2-106DL**		**JTK004180**
Z750 (ZR750)	750	2004	2012	**163720176 JTF1538.15**	**163721654 JTR478.43**	**163718276 JTC520Z3-112RL**		**JTK000950**
Z750 (ZR750) ABS	750	2007	2012	**163720176 JTF1538.15**	**163721654 JTR478.43**	**163718276 JTC520Z3-112RL**		**JTK000950**
Z750 R (ZR750)	750	2011	2012	**163720176 JTF1538.15**	**163721654 JTR478.43**	**163718276 JTC520Z3-112RL**		**JTK000950**
Z750 R (ZR750) ABS	750	2011	2012	**163720176 JTF1538.15**	**163721654 JTR478.43**	**163718276 JTC520Z3-112RL**		**JTK000950**
Z750 R (ZR750) Black Edition	750	2012	2012	**163720176 JTF1538.15**	**163721654 JTR478.43**	**163718276 JTC520Z3-112RL**		**JTK000950**
Z750 S (ZR750 S)	750	2005	2006	**163720176 JTF1538.15**	**163721654 JTR478.43**	**163718276 JTC520Z3-112RL**		**JTK000950**

Modello *Model*	**CC**	**Da** *From*	**A** *To*	**Pignone Codice RMS - JT** *Front Sprocket RMS - JT Code*	**Corona Codice RMS - JT** *Rear Sprocket RMS - JT Code*	**Catena Codice RMS - JT** *Chain RMS - JT Code*	**Carrier Codice RMS - JT** *Carrier RMS - JT Code*	**Codice Kit** *Kit Code*
ZR-7 (ZR750)	750	1999	2004	**163720575 JTF520.16**	**163721702 JTR498.38**	**163718317 JTC525X1R108RL**		**JTK001790**
ZR-7S (ZR750S)	750	2001	2004	**163720575 JTF520.16**	**163721702 JTR498.38**	**163718317 JTC525X1R108RL**		**JTK001790**
ZX-7R (ZX750) Ninja	750	1996	2003	**163720575 JTF520.16**	**163721185 JTR1489.43**	**163718339 JTC525Z3-110RL**		**JTK001960**
ZX-7RR (ZX750) Ninja	750	1996	1999	**163720575 JTF520.16**	**163721184 JTR1489.42**	**163718338 JTC525Z3-108RL**		**JTK001810**
VN800 Classic	800	1996	2006	**163720572 JTF519.17**	**163721711 JTR499.42**	**163718407 JTC530Z3-112RL**		**JTK003210**
VN800 Drifter	800	1999	2006	**163720572 JTF519.17**	**163721710 JTR499.40**	**163718407 JTC530Z3-112RL**		**JTK003190**
VN800 Vulcan	800	1997	2005	**163720572 JTF519.17**	**163721711 JTR499.42**	**163718408 JTC530Z3-114RL**		**JTK003300**
Z800 (ZR800)	800	2013	2016	**163720176 JTF1538.15**	**163721655 JTR478.45**	**163718277 JTC520Z3-114RL**		**JTK001100**
Z800 Sugomi Edition (ZR800)	800	2016	2016	**163720176 JTF1538.15**	**163721655 JTR478.45**	**163718277 JTC520Z3-114RL**		**JTK001100**
Z800e (ZR800)	800	2013	2016	**163720176 JTF1538.15**	**163721655 JTR478.45**	**163718277 JTC520Z3-114RL**		**JTK001100**
Z900 (ZR900)	900	2017	2018	**163720169 JTF1537.15**	**163722624 JTR1489.44**	**163718341 JTC525Z3-114RL**		**JTK004190**
Z900 ABS (ZR900)	900	2017	2018	**163720169 JTF1537.15**	**163722624 JTR1489.44**	**163718341 JTC525Z3-114RL**		**JTK004190**
ZX-9R (ZX900) Ninja	900	1998	2001	**163720571 JTF519.16**	**163721693 JTR488.41**	**163718406 JTC530Z3-110RL**		**JTK003030**
ZX-9R (ZX900) Ninja	900	2002	2003	**163720170 JTF1537.16**	**163721183 JTR1489.41**	**163718339 JTC525Z3-110RL**		**JTK001950**
KLV1000	1000	2004	2006	**163720171 JTF1537.17**	**163721213 JTR1792.41**	**163718340 JTC525Z3-112RL**		**JTK002180**
KLZ1000 Versys	1000	2012	2018	**163720169 JTF1537.15**	**163721185 JTR1489.43**	**163718342 JTC525Z3-116RL**		**JTK002350**
Z1000 (ZR1000)	1000	2003	2006	**163720170 JTF1537.16**	**163721184 JTR1489.42**	**163718340 JTC525Z3-112RL**		**JTK002120**
Z1000 (ZR1000)	1000	2007	2009	**163720169 JTF1537.15**	**163721182 JTR1489.40**	**163718339 JTC525Z3-110RL**		**JTK001900**
Z1000 (ZR1000)	1000	2010	2014	**163720169 JTF1537.15**	**163721184 JTR1489.42**	**163718340 JTC525Z3-112RL**		**JTK002070**
Z1000 (ZR1000) ABS	1000	2007	2009	**163720169 JTF1537.15**	**163721182 JTR1489.40**	**163718339 JTC525Z3-110RL**		**JTK001900**
Z1000 (ZR1000) ABS	1000	2011	2013	**163720169 JTF1537.15**	**163721184 JTR1489.42**	**163718340 JTC525Z3-112RL**		**JTK002070**
Z1000 (ZR1000) ABS	1000	2014	2018	**163720169 JTF1537.15**	**163721185 JTR1489.43**	**163718340 JTC525Z3-112RL**		**JTK002080**
Z1000 (ZR1000) Black Edition	1000	2012	2012	**163720169 JTF1537.15**	**163721184 JTR1489.42**	**163718340 JTC525Z3-112RL**		**JTK002070**
Z1000 R (ZR1000)	1000	2017	2018	**163720169 JTF1537.15**	**163721185 JTR1489.43**	**163718340 JTC525Z3-112RL**		**JTK002080**
Z1000 Special Edition	1000	2013	2013	**163720169 JTF1537.15**	**163721184 JTR1489.42**	**163718340 JTC525Z3-112RL**		**JTK002070**
Z1000 Special Edition	1000	2014	2015	**163720169 JTF1537.15**	**163721185 JTR1489.43**	**163718340 JTC525Z3-112RL**		**JTK002080**
Z1000 SX (ZR1000)	1000	2011	2018	**163720169 JTF1537.15**	**163721183 JTR1489.41**	**163718340 JTC525Z3-112RL**		**JTK002060**
Z1000 SX (ZR1000) ABS	1000	2011	2017	**163720169 JTF1537.15**	**163721183 JTR1489.41**	**163718340 JTC525Z3-112RL**		**JTK002060**
Z1000 SX City (ZR1000)	1000	2011	2011	**163720169 JTF1537.15**	**163721183 JTR1489.41**	**163718340 JTC525Z3-112RL**		**JTK002060**
Z1000 SX Tourer (ZR1000)	1000	2011	2015	**163720169 JTF1537.15**	**163721183 JTR1489.41**	**163718340 JTC525Z3-112RL**		**JTK002060**
ZX-10R (ZX1000) Ninja	1000	2004	2005	**163720171 JTF1537.17**	**163721181 JTR1489.39**	**163718339 JTC525Z3-110RL**		**JTK002000**
ZX-10R (ZX1000) Ninja	1000	2006	2007	**163720171 JTF1537.17**	**163721182 JTR1489.40**	**163718338 JTC525Z3-108RL**		**JTK001880**
ZX-10R (ZX1000) Ninja	1000	2008	2010	**163720171 JTF1537.17**	**163721183 JTR1489.41**	**163718339 JTC525Z3-110RL**		**JTK002020**

Modello *Model*	**CC**	**Da** *From*	**A** *To*	**Pignone** **Codice RMS - JT** *Front Sprocket* *RMS - JT Code*	**Corona** **Codice RMS - JT** *Rear Sprocket* *RMS - JT Code*	**Catena** **Codice RMS - JT** *Chain* *RMS - JT Code*	**Carrier** **Codice RMS - JT** *Carrier* *RMS - JT Code*	**Codice Kit** *Kit Code*
ZX-10R (ZX1000) Ninja	1000	2011	2015	**163720171** **JTF1537.17**	**163721181** **JTR1489.39**	**163718340** **JTC525Z3-112RL**		**JTK002170**
ZX-10R (ZX1000) Ninja	1000	2016	2017	**163720171** **JTF1537.17**	**163721181** **JTR1489.39**	**163718341** **JTC525Z3-114RL**		**JTK004200**
ZX-10R (ZX1000) Ninja ABS	1000	2011	2015	**163720171** **JTF1537.17**	**163721181** **JTR1489.39**	**163718340** **JTC525Z3-112RL**		**JTK002170**
ZX-10R (ZX1000) Ninja ABS	1000	2016	2018	**163720171** **JTF1537.17**	**163721181** **JTR1489.39**	**163718341** **JTC525Z3-114RL**		**JTK004200**
ZX-10R (ZX1000) Ninja KRT ABS	1000	2016	2017	**163720171** **JTF1537.17**	**163721181** **JTR1489.39**	**163718341** **JTC525Z3-114RL**		**JTK004200**
ZX-10R SE (ZX1002)	1000	2018	2018	**163720171** **JTF1537.17**	**163721181** **JTR1489.39**	**163718341** **JTC525Z3-114RL**		**JTK004200**
ZX-10RR (ZX1000) Ninja	1000	2017	2018	**163720171** **JTF1537.17**	**163721181** **JTR1489.39**	**163718341** **JTC525Z3-114RL**		**JTK004200**
ZRX1200	1200	2001	2004	**163720162** **JTF1529.17**	**163721694** **JTR488.42**	**163718406** **JTC530Z3-110RL**		**JTK003080**
ZRX1200 R (ZR1200)	1200	2001	2006	**163720162** **JTF1529.17**	**163721694** **JTR488.42**	**163718406** **JTC530Z3-110RL**		**JTK003080**
ZRX1200 S (ZR1200S)	1200	2001	2006	**163720162** **JTF1529.17**	**163721694** **JTR488.42**	**163718406** **JTC530Z3-110RL**		**JTK003080**
ZX-14 (ZX1400) Ninja	1400	2006	2011	**163720563** **JTF517.17**	**163721192** **JTR1493.41**	**163718409** **JTC530Z3-116RL**		**JTK003470**
ZX-14R (ZX1400) Ninja	1400	2012	2014	**163720563** **JTF517.17**	**163721193** **JTR1493.42**	**163718410** **JTC530Z3-118RL**		**JTK003550**
ZX-14R (ZX1400) Ninja ABS	1400	2013	2018	**163720563** **JTF517.17**	**163721193** **JTR1493.42**	**163718410** **JTC530Z3-118RL**		**JTK003550**
ZX-14R (ZX1400) Ninja ABS SE	1400	2016	2018	**163720563** **JTF517.17**	**163721193** **JTR1493.42**	**163718410** **JTC530Z3-118RL**		**JTK003550**
ZZR1400	1400	2006	2010	**163720563** **JTF517.17**	**163721192** **JTR1493.41**	**163718409** **JTC530Z3-116RL**		**JTK003470**
ZZR1400	1400	2011	2014	**163720563** **JTF517.17**	**163721193** **JTR1493.42**	**163718410** **JTC530Z3-118RL**		**JTK003550**
ZZR1400 (ABS)	1400	2011	2018	**163720563** **JTF517.17**	**163721193** **JTR1493.42**	**163718410** **JTC530Z3-118RL**		**JTK003550**
ZZR1400 (ZX1400) Performance Sport ABS	1400	2015	2018	**163720563** **JTF517.17**	**163721192** **JTR1493.41**	**163718410** **JTC530Z3-118RL**		**JTK003540**
ZZR1400 Performance	1400	2011	2012	**163720563** **JTF517.17**	**163721192** **JTR1493.41**	**163718410** **JTC530Z3-118RL**		**JTK003540**
ZZR1400 Special Edition	1400	2013	2013	**163720563** **JTF517.17**	**163721193** **JTR1493.42**	**163718410** **JTC530Z3-118RL**		**JTK003550**
KTM								
125 Duke	125	2011	2013	**163720240** **JTF1903.14**	**163721522** **JTR273.45**	**163718254** **JTC520X1R2-112DL**		**JTK004210**
125 Duke	125	2014	2018	**163720240** **JTF1903.14**	**163722575** **JTR890.45ZBK**	**163718186** **JTC520X1RNN118DL**		**JTK003660**
125 EXC Enduro	125	2000	2000	**163720229** **JTF1901.14SC**	**163722192** **JTR897.38**	**163718140** **JTC520HDR118SL**		**JTK004220**
125 EXC Enduro	125	2001	2002	**163720229** **JTF1901.14SC**	**163722194** **JTR897.42**	**163718140** **JTC520HDR118SL**		**JTK004230**
125 EXC Enduro	125	2003	2003	**163720229** **JTF1901.14SC**	**163722194** **JTR897.42**	**163718140** **JTC520HDR118SL**		**JTK004230**
125 EXC Enduro	125	2004	2011	**163720229** **JTF1901.14SC**	**163722194** **JTR897.42**	**163718140** **JTC520HDR118SL**		**JTK004230**
125 EXC Enduro	125	2012	2016	**163720229** **JTF1901.14SC**	**163722201** **JTR897.50**	**163718140** **JTC520HDR118SL**		**JTK004240**
125 RC	125	2014	2017	**163720240** **JTF1903.14**	**163722575** **JTR890.45ZBK**	**163718257** **JTC520X1R2-118DL**		**JTK004250**
125 RC	125	2018	2018	**163720240** **JTF1903.14**	**163722575** **JTR890.45ZBK**	**163718257** **JTC520X1R2-118DL**		**JTK004250**
200 Duke	200	2012	2014	**163720240** **JTF1903.14**	**163721520** **JTR273.42**	**163718257** **JTC520X1R2-118DL**		**JTK004260**
200 Duke	200	2015	2016	**163720240** **JTF1903.14**	**163722574** **JTR890.42ZBK**	**163718257** **JTC520X1R2-118DL**		**JTK004270**
200 Duke	200	2017	2018	**163720240** **JTF1903.14**	**163722574** **JTR890.42ZBK**	**163718257** **JTC520X1R2-118DL**		**JTK004270**
200 EXC Enduro	200	2000	2011	**163720229** **JTF1901.14SC**	**163722194** **JTR897.42**	**163718191** **JTC520X1R118DL**		**JTK004280**

Modello *Model*	CC	Da *From*	A *To*	Pignone Codice RMS - JT *Front Sprocket* *RMS - JT Code*	Corona Codice RMS - JT *Rear Sprocket* *RMS - JT Code*	Catena Codice RMS - JT *Chain* *RMS - JT Code*	Carrier Codice RMS - JT *Carrier* *RMS - JT Code*	Codice Kit *Kit Code*
200 EXC Enduro	200	2012	2016	**163720229** **JTF1901.14SC**	**163722196** **JTR897.45**	**163718191** **JTC520X1R118DL**		**JTK004290**
200 RC	200	2014	2016	**163720240** **JTF1903.14**	**163722574** **JTR890.42ZBK**	**163718257** **JTC520X1R2-118DL**		**JTK004270**
200 RC	200	2017	2018	**163720240** **JTF1903.14**	**163722574** **JTR890.42ZBK**	**163718257** **JTC520X1R2-118DL**		**JTK004270**
250 EXC Enduro	250	2000	2003	**163720230** **JTF1901.15SC**	**163722199** **JTR897.48**	**163718191** **JTC520X1R118DL**		**JTK004300**
250 EXC Enduro	250	2005	2011	**163720228** **JTF1901.13SC**	**163722193** **JTR897.40**	**163718191** **JTC520X1R118DL**		**JTK004310**
250 EXC Enduro	250	2012	2017	**163720229** **JTF1901.14SC**	**163722201** **JTR897.50**	**163718191** **JTC520X1R118DL**		**JTK004320**
250 EXC Enduro TPI	250	2018	2018	**163720229** **JTF1901.14SC**	**163722201** **JTR897.50**	**163718191** **JTC520X1R118DL**		**JTK004320**
250 EXC-F Enduro	250	2007	2011	**163720229** **JTF1901.14SC**	**163722192** **JTR897.38**	**163718191** **JTC520X1R118DL**		**JTK004330**
250 EXC-F Enduro	250	2012	2013	**163720229** **JTF1901.14SC**	**163722201** **JTR897.50**	**163718191** **JTC520X1R118DL**		**JTK004320**
250 EXC-F Enduro	250	2014	2018	**163720229** **JTF1901.14SC**	**163722203** **JTR897.52**	**163718191** **JTC520X1R118DL**		**JTK004340**
250 EXC-F Enduro	250	2015	2018	**163720228** **JTF1901.13SC**	**163722203** **JTR897.52**	**163718191** **JTC520X1R118DL**		**JTK004350**
300 EXC Enduro	300	2000	2003	**163720230** **JTF1901.15SC**	**163722199** **JTR897.48**	**163718191** **JTC520X1R118DL**		**JTK004300**
300 EXC Enduro	300	2004	2004	**163720228** **JTF1901.13SC**	**163722194** **JTR897.42**	**163718191** **JTC520X1R118DL**		**JTK004360**
300 EXC Enduro	300	2005	2011	**163720228** **JTF1901.13SC**	**163722193** **JTR897.40**	**163718190** **JTC520X1R116DL**		**JTK004370**
300 EXC Enduro	300	2012	2017	**163720229** **JTF1901.14SC**	**163722201** **JTR897.50**	**163718191** **JTC520X1R118DL**		**JTK004320**
300 EXC TPI Enduro	300	2018	2018	**163720229** **JTF1901.14SC**	**163722201** **JTR897.50**	**163718191** **JTC520X1R118DL**		**JTK004320**
350 EXC-F	350	2012	2018	**163720229** **JTF1901.14SC**	**163722203** **JTR897.52**	**163718191** **JTC520X1R118DL**		**JTK004340**
390 Duke	390	2013	2014	**163720810** **JTF1908.15**	**163722575** **JTR890.45ZBK**	**163718257** **JTC520X1R2-118DL**		**JTK004380**
390 Duke	390	2015	2016	**163720810** **JTF1908.15**	**163722575** **JTR890.45ZBK**	**163718257** **JTC520X1R2-118DL**		**JTK004380**
390 Duke	390	2017	2018	**163720810** **JTF1908.15**	**163722575** **JTR890.45ZBK**	**163718257** **JTC520X1R2-118DL**		**JTK004380**
390 RC	390	2014	2016	**163720810** **JTF1908.15**	**163722575** **JTR890.45ZBK**	**163718257** **JTC520X1R2-118DL**		**JTK004380**
390 RC	390	2017	2018	**163720810** **JTF1908.15**	**163722575** **JTR890.45ZBK**	**163718257** **JTC520X1R2-118DL**		**JTK004380**
390 RC R	390	2018	2018	**163720810** **JTF1908.15**	**163722575** **JTR890.45ZBK**	**163718257** **JTC520X1R2-118DL**		**JTK004380**
400 EXC Enduro Racing	400	2001	2002	**163720229** **JTF1901.14SC**	**163722201** **JTR897.50**	**163718191** **JTC520X1R118DL**		**JTK004320**
400 EXC Enduro Racing	400	2003	2011	**163720230** **JTF1901.15SC**	**163722196** **JTR897.45**	**163718191** **JTC520X1R118DL**		**JTK004390**
450 EXC Enduro Racing	450	2003	2012	**163720230** **JTF1901.15SC**	**163722196** **JTR897.45**	**163718191** **JTC520X1R118DL**		**JTK004390**
450 EXC Enduro Racing	450	2013	2015	**163720229** **JTF1901.14SC**	**163722203** **JTR897.52**	**163718258** **JTC520X1R2-120DL**		**JTK001450**
450 EXC Enduro Racing	450	2013	2016	**163720229** **JTF1901.14SC**	**163722203** **JTR897.52**	**163718191** **JTC520X1R118DL**		**JTK004340**
500 EXC	500	2012	2012	**163720228** **JTF1901.13SC**	**163722201** **JTR897.50**	**163718191** **JTC520X1R118DL**		**JTK004400**
500 EXC	500	2013	2016	**163720229** **JTF1901.14SC**	**163722201** **JTR897.50**	**163718191** **JTC520X1R118DL**		**JTK004320**
520 EXC Enduro Racing	520	2000	2002	**163720230** **JTF1901.15SC**	**163722193** **JTR897.40**	**163718191** **JTC520X1R118DL**		**JTK004410**
525 EXC Enduro Racing	525	2003	2007	**163720230** **JTF1901.15SC**	**163722196** **JTR897.45**	**163718191** **JTC520X1R118DL**		**JTK004390**
530 EXC	530	2008	2011	**163720230** **JTF1901.15SC**	**163722196** **JTR897.45**	**163718191** **JTC520X1R118DL**		**JTK004390**

Modello *Model*	**CC**	**Da** *From*	**A** *To*	**Pignone Codice RMS - JT** *Front Sprocket RMS - JT Code*	**Corona Codice RMS - JT** *Rear Sprocket RMS - JT Code*	**Catena Codice RMS - JT** *Chain RMS - JT Code*	**Carrier Codice RMS - JT** *Carrier RMS - JT Code*	**Codice Kit** *Kit Code*
620 SC Super Competition	620	2000	2001	**163720236 JTF1902.16**	**163722193 JTR897.40**	**163718191 JTC520X1R118DL**		**JTK004420**
620 SC Supermoto	620	2000	2001	**163720237 JTF1902.17**	**163722193 JTR897.40**	**163718191 JTC520X1R118DL**		**JTK004430**
625 LC4 SC Supermoto	625	2002	2002	**163720236 JTF1902.16**	**163722194 JTR897.42**	**163718191 JTC520X1R118DL**		**JTK004440**
625 LC4 Supercompetition	625	2002	2002	**163720235 JTF1902.15**	**163722194 JTR897.42**	**163718191 JTC520X1R118DL**		**JTK004450**
640 LC4 Adventurer R	640	1999	2007	**163720236 JTF1902.16**	**163722194 JTR897.42**	**163718191 JTC520X1R118DL**		**JTK004440**
640 LC4 Duke II	640	2000	2003	**163720237 JTF1902.17**	**163722192 JTR897.38**	**163718191 JTC520X1R118DL**		**JTK004460**
640 LC4 Duke II	640	2004	2006	**163720237 JTF1902.17**	**163722194 JTR897.42**	**163718191 JTC520X1R118DL**		**JTK004470**
640 LC4 E Enduro	640	2000	2006	**163720236 JTF1902.16**	**163722194 JTR897.42**	**163718191 JTC520X1R118DL**		**JTK004440**
690 Duke	690	2008	2018	**163720236 JTF1902.16**	**163722193 JTR897.40**	**163718257 JTC520X1R2-118DL**		**JTK004480**
690 Duke R	690	2010	2017	**163720236 JTF1902.16**	**163722193 JTR897.40**	**163718257 JTC520X1R2-118DL**		**JTK004480**
690 Enduro	690	2008	2010	**163720235 JTF1902.15**	**163722196 JTR897.45**	**163718280 JTC520Z3-120RL**		**JTK001260**
690 Enduro R	690	2008	2015	**163720235 JTF1902.15**	**163722196 JTR897.45**	**163718280 JTC520Z3-120RL**		**JTK001260**
690 Rally	690	2009	2010	**163720237 JTF1902.17**	**163722194 JTR897.42**	**163718257 JTC520X1R2-118DL**		**JTK004490**
690 SM	690	2007	2007	**163720235 JTF1902.15**	**163722193 JTR897.40**	**163718279 JTC520Z3-118RL**		**JTK001200**
690 SM	690	2008	2009	**163720237 JTF1902.17**	**163722193 JTR897.40**	**163718279 JTC520Z3-118RL**		**JTK001240**
690 SM Ltd. Ed.	690	2010	2010	**163720236 JTF1902.16**	**163722193 JTR897.40**	**163718279 JTC520Z3-118RL**		**JTK001210**
690 SM R	690	2008	2009	**163720236 JTF1902.16**	**163722193 JTR897.40**	**163718279 JTC520Z3-118RL**		**JTK001210**
690 SMC	690	2008	2011	**163720236 JTF1902.16**	**163722194 JTR897.42**	**163718279 JTC520Z3-118RL**		**JTK001220**
690 SMC R	690	2012	2015	**163720236 JTF1902.16**	**163722194 JTR897.42**	**163718279 JTC520Z3-118RL**		**JTK001220**
790 Duke	790	2018	2018	**163720236 JTF1902.16**	**163722639 JTR897.41**	**163718343 JTC525Z3-118RL**		**JTK004500**
950 LC8 Adventure	950	2003	2006	**163720244 JTF1904.17**	**163722209 JTR899.42**	**163718343 JTC525Z3-118RL**		**JTK002590**
950 LC8 Adventure	950	2003	2006	**163720768 JTF1904.17RB**	**163722209 JTR899.42**	**163718531 JTC525Z3NN118RL**		**JTPRO2590**
950 LC8 Adventure S	950	2004	2006	**163720244 JTF1904.17**	**163722209 JTR899.42**	**163718343 JTC525Z3-118RL**		**JTK002590**
950 LC8 Adventure S	950	2004	2006	**163720768 JTF1904.17RB**	**163722209 JTR899.42**	**163718531 JTC525Z3NN118RL**		**JTPRO2590**
950 LC8 Supermoto	950	2006	2009	**163720244 JTF1904.17**	**163722206 JTR898.41**	**163718343 JTC525Z3-118RL**		**JTK002580**
950 LC8 Supermoto R	950	2007	2008	**163720244 JTF1904.17**	**163722206 JTR898.41**	**163718343 JTC525Z3-118RL**		**JTK002580**
950 Super Enduro R	950	2006	2010	**163720243 JTF1904.16**	**163722210 JTR899.45**	**163718343 JTC525Z3-118RL**		**JTK002550**
990 Adventure	990	2005	2009	**163720244 JTF1904.17**	**163722209 JTR899.42**	**163718343 JTC525Z3-118RL**		**JTK002590**
990 Adventure	990	2005	2009	**163720768 JTF1904.17RB**	**163722209 JTR899.42**	**163718531 JTC525Z3NN118RL**		**JTPRO2590**
990 Adventure	990	2010	2013	**163720243 JTF1904.16**	**163722209 JTR899.42**	**163718343 JTC525Z3-118RL**		**JTK002530**
990 Adventure	990	2010	2013	**163720767 JTF1904.16RB**	**163722209 JTR899.42**	**163718531 JTC525Z3NN118RL**		**JTPRO2530**
990 Adventure R	990	2010	2013	**163720243 JTF1904.16**	**163722209 JTR899.42**	**163718343 JTC525Z3-118RL**		**JTK002530**
990 Adventure R	990	2010	2013	**163720767 JTF1904.16RB**	**163722209 JTR899.42**	**163718531 JTC525Z3NN118RL**		**JTPRO2530**

Modello *Model*	**CC**	**Da** *From*	**A** *To*	**Pignone Codice RMS - JT** *Front Sprocket RMS - JT Code*	**Corona Codice RMS - JT** *Rear Sprocket RMS - JT Code*	**Catena Codice RMS - JT** *Chain RMS - JT Code*	**Carrier Codice RMS - JT** *Carrier RMS - JT Code*	**Codice Kit** *Kit Code*
990 Adventure S	990	2006	2008	**163720244 JTF1904.17**	**163722209 JTR899.42**	**163718343 JTC525Z3-118RL**		**JTK002590**
990 Adventure S	990	2007	2008	**163720768 JTF1904.17RB**	**163722209 JTR899.42**	**163718531 JTC525Z3NN118RL**		**JTPRO2590**
990 SM R	990	2010	2013	**163720244 JTF1904.17**	**163722206 JTR898.41**	**163718344 JTC525Z3-120RL**		**JTK002660**
990 SM R	990	2010	2014	**163720244 JTF1904.17**	**163722206 JTR898.41**	**163718343 JTC525Z3-118RL**		**JTK002580**
990 SM T	990	2010	2013	**163720244 JTF1904.17**	**163722206 JTR898.41**	**163718343 JTC525Z3-118RL**		**JTK002580**
990 Superduke	990	2005	2012	**163720244 JTF1904.17**	**163722205 JTR898.38**	**163718343 JTC525Z3-118RL**		**JTK002570**
990 Superduke R	990	2010	2011	**163720244 JTF1904.17**	**163722205 JTR898.38**	**163718343 JTC525Z3-118RL**		**JTK002570**
990 Superduke R	990	2012	2013	**163720243 JTF1904.16**	**163722205 JTR898.38**	**163718343 JTC525Z3-118RL**		**JTK004510**
990 Supermoto	990	2008	2010	**163720244 JTF1904.17**	**163722206 JTR898.41**	**163718343 JTC525Z3-118RL**		**JTK002580**
1050 Adventure	1050	2015	2015	**163720244 JTF1904.17**	**163722209 JTR899.42**	**163718344 JTC525Z3-120RL**		**JTK002670**
1050 Adventure	1050	2015	2016	**163720244 JTF1904.17**	**163722209 JTR899.42**	**163718343 JTC525Z3-118RL**		**JTK002590**
1090 Adventure	1090	2017	2018	**163720244 JTF1904.17**	**163722209 JTR899.42**	**163718343 JTC525Z3-118RL**		**JTK002590**
1090 Adventure R	1090	2017	2018	**163720244 JTF1904.17**	**163722209 JTR899.42**	**163718343 JTC525Z3-118RL**		**JTK002590**
1190 Adventure	1190	2013	2015	**163720768 JTF1904.17RB**	**163722209 JTR899.42**	**163718531 JTC525Z3NN118RL**		**JTPRO2590**
1190 Adventure	1190	2013	2016	**163720244 JTF1904.17**	**163722209 JTR899.42**	**163718343 JTC525Z3-118RL**		**JTK002590**
1190 Adventure R	1190	2013	2015	**163720768 JTF1904.17RB**	**163722209 JTR899.42**	**163718531 JTC525Z3NN118RL**		**JTPRO2590**
1190 Adventure R	1190	2013	2016	**163720244 JTF1904.17**	**163722209 JTR899.42**	**163718343 JTC525Z3-118RL**		**JTK002590**
1190 RC8	1190	2008	2009	**163720244 JTF1904.17**	**163722204 JTR898.37**	**163718343 JTC525Z3-118RL**		**JTK004520**
1190 RC8	1190	2010	2011	**163720244 JTF1904.17**	**163722205 JTR898.38**	**163718343 JTC525Z3-118RL**		**JTK002570**
1190 RC8 R	1190	2010	2010	**163720244 JTF1904.17**	**163722204 JTR898.37**	**163718343 JTC525Z3-118RL**		**JTK004520**
1190 RC8 R	1190	2011	2015	**163720244 JTF1904.17**	**163722205 JTR898.38**	**163718343 JTC525Z3-118RL**		**JTK002570**
1190 RC8 R Akropovic Ltd. Ed.	1190	2010	2010	**163720244 JTF1904.17**	**163722204 JTR898.37**	**163718343 JTC525Z3-118RL**		**JTK004520**
1190 RC8 R Red Bull Ltd Ed.	1190	2010	2010	**163720244 JTF1904.17**	**163722204 JTR898.37**	**163718343 JTC525Z3-118RL**		**JTK004520**
1190 RC8 R Track	1190	2011	2013	**163720244 JTF1904.17**	**163722205 JTR898.38**	**163718343 JTC525Z3-118RL**		**JTK002570**
1290 Superadventure	1290	2015	2015	**163720768 JTF1904.17RB**	**163722209 JTR899.42**	**163718531 JTC525Z3NN118RL**		**JTPRO2590**
1290 Superadventure	1290	2015	2016	**163720244 JTF1904.17**	**163722209 JTR899.42**	**163718343 JTC525Z3-118RL**		**JTK002590**
1290 Superadventure R	1290	2017	2018	**163720244 JTF1904.17**	**163722209 JTR899.42**	**163718343 JTC525Z3-118RL**		**JTK002590**
1290 Superadventure S	1290	2017	2018	**163720244 JTF1904.17**	**163722209 JTR899.42**	**163718343 JTC525Z3-118RL**		**JTK002590**
1290 Superadventure T	1290	2017	2018	**163720244 JTF1904.17**	**163722209 JTR899.42**	**163718343 JTC525Z3-118RL**		**JTK002590**
1290 Superduke	1290	2014	2015	**163720244 JTF1904.17**	**163722576 JTR893.38ZBK**	**163718340 JTC525Z3-112RL**		**JTK004530**
1290 Superduke GT	1290	2016	2018	**163720244 JTF1904.17**	**163722576 JTR893.38ZBK**	**163718340 JTC525Z3-112RL**		**JTK004530**
1290 Superduke R	1290	2016	2018	**163720244 JTF1904.17**	**163722576 JTR893.38ZBK**	**163718340 JTC525Z3-112RL**		**JTK004530**

Modello *Model*	**CC**	**Da** *From*	**A** *To*	**Pignone** **Codice RMS - JT** *Front Sprocket* *RMS - JT Code*	**Corona** **Codice RMS - JT** *Rear Sprocket* *RMS - JT Code*	**Catena** **Codice RMS - JT** *Chain* *RMS - JT Code*	**Carrier** **Codice RMS - JT** *Carrier* *RMS - JT Code*	**Codice Kit** *Kit Code*
SUZUKI								
GSX-R125	125	2017	2018	**163720841** **JTF1425.14**	**163722638** **JTR803.45**	**163718542** **JTC428HPOGB122SL**		**JTK004540**
GSX-S125	125	2017	2018	**163720841** **JTF1425.14**	**163722638** **JTR803.45**	**163718542** **JTC428HPOGB122SL**		**JTK004540**
RV125 Van Van	125	2003	2006	**163720468** **JTF425.15**	**163721226** **JTR1796.51**	**163718076** **JTC428HDR134SL**		**JTK000320**
RV125 Van Van	125	2007	2015	**163720468** **JTF425.15**	**163721225** **JTR1796.49**	**163718076** **JTC428HDR134SL**		**JTK000300**
DR-Z250	250	2001	2007	**163720502** **JTF432.13SC**	**163721909** **JTR808.49**	**163718254** **JTC520X1R2-112DL**		**JTK001080**
GSX250 R	250	2017	2018	**163720754** **JTF1447.14RB**	**163721992** **JTR823.46**	**163718256** **JTC520X1R2-116DL**		**JTK004550**
GW250 Inazuma	250	2012	2017	**163720745** **JTF1447.14**	**163721992** **JTR823.46**	**163718256** **JTC520X1R2-116DL**		**JTK001190**
GW250 Inazuma F	250	2015	2017	**163720754** **JTF1447.14RB**	**163721992** **JTR823.46**	**163718256** **JTC520X1R2-116DL**		**JTK004550**
GW250 Inazuma Z	250	2015	2016	**163720754** **JTF1447.14RB**	**163721992** **JTR823.46**	**163718256** **JTC520X1R2-116DL**		**JTK004550**
GSF 600 Bandit	600	1995	1999	**163720552** **JTF513.15**	**163722013** **JTR829.47**	**163718387** **JTC530X1R110RL**		**JTK003010**
GSF 600 Bandit	600	2000	2004	**163720552** **JTF513.15**	**163722013** **JTR829.47**	**163718388** **JTC530X1R112RL**		**JTK003140**
GSF 600 S Bandit	600	1995	1999	**163720552** **JTF513.15**	**163722013** **JTR829.47**	**163718387** **JTC530X1R110RL**		**JTK003010**
GSF 600 S Bandit	600	2000	2004	**163720552** **JTF513.15**	**163722013** **JTR829.47**	**163718388** **JTC530X1R112RL**		**JTK003140**
GSR600	600	2006	2010	**163720575** **JTF520.16**	**163721219** **JTR1792.48**	**163718320** **JTC525X1R114RL**		**JTK002310**
GSR600 Yoshimura	600	2010	2010	**163720575** **JTF520.16**	**163721219** **JTR1792.48**	**163718320** **JTC525X1R114RL**		**JTK002310**
GSX-R600	600	1998	2000	**163720575** **JTF520.16**	**163721707** **JTR498.46**	**163718317** **JTC525X1R108RL**		**JTK001850**
GSX-R600	600	2001	2005	**163720575** **JTF520.16**	**163721217** **JTR1792.45**	**163718318** **JTC525X1R110RL**		**JTK001980**
GSX-R600	600	2006	2010	**163720575** **JTF520.16**	**163721215** **JTR1792.43**	**163718320** **JTC525X1R114RL**		**JTK002260**
GSX-R600	600	2011	2018	**163720575** **JTF520.16**	**163721305** **JTR1876.43**	**163718341** **JTC525Z3-114RL**		**JTK002270**
DL650 A V-Strom ABS	650	2007	2015	**163720574** **JTF520.15**	**163721218** **JTR1792.47**	**163718343** **JTC525Z3-118RL**		**JTK002480**
DL650 A V-Strom ABS	650	2007	2015	**163720790** **JTF520.15RB**	**163722474** **JTR1792.47ZBK**	**163718307** **JTC525X1RNN118RL**		**JTPRO2480**
DL650 A V-Strom ABS	650	2007	2018	**163720574** **JTF520.15**	**163721218** **JTR1792.47**	**163718322** **JTC525X1R118RL**		**JTK002470**
DL650 A V-Strom ABS Adventure	650	2012	2015	**163720574** **JTF520.15**	**163721218** **JTR1792.47**	**163718322** **JTC525X1R118RL**		**JTK002470**
DL650 A V-Strom ABS Adventure	650	2015	2015	**163720574** **JTF520.15**	**163721218** **JTR1792.47**	**163718343** **JTC525Z3-118RL**		**JTK002480**
DL650 A V-Strom ABS Adventure	650	2015	2015	**163720790** **JTF520.15RB**	**163722474** **JTR1792.47ZBK**	**163718307** **JTC525X1RNN118RL**		**JTPRO2480**
DL650 A V-Strom GT	650	2010	2010	**163720574** **JTF520.15**	**163721218** **JTR1792.47**	**163718343** **JTC525Z3-118RL**		**JTK002480**
DL650 A V-Strom GT	650	2010	2010	**163720790** **JTF520.15RB**	**163722474** **JTR1792.47ZBK**	**163718307** **JTC525X1RNN118RL**		**JTPRO2480**
DL650 A V-Strom Traveller	650	2010	2010	**163720574** **JTF520.15**	**163721218** **JTR1792.47**	**163718343** **JTC525Z3-118RL**		**JTK002480**
DL650 A V-Strom Traveller	650	2010	2010	**163720790** **JTF520.15RB**	**163722474** **JTR1792.47ZBK**	**163718307** **JTC525X1RNN118RL**		**JTPRO2480**
DL650 A V-Strom XT ABS	650	2015	2015	**163720574** **JTF520.15**	**163721218** **JTR1792.47**	**163718343** **JTC525Z3-118RL**		**JTK002480**
DL650 A V-Strom XT ABS	650	2015	2015	**163720790** **JTF520.15RB**	**163722474** **JTR1792.47ZBK**	**163718307** **JTC525X1RNN118RL**		**JTPRO2480**
DL650 A V-Strom XT ABS	650	2015	2018	**163720574** **JTF520.15**	**163721218** **JTR1792.47**	**163718322** **JTC525X1R118RL**		**JTK002470**

Modello *Model*	CC	Da *From*	A *To*	Pignone Codice RMS - JT *Front Sprocket* *RMS - JT Code*	Corona Codice RMS - JT *Rear Sprocket* *RMS - JT Code*	Catena Codice RMS - JT *Chain* *RMS - JT Code*	Carrier Codice RMS - JT *Carrier* *RMS - JT Code*	Codice Kit *Kit Code*
DL650 V-Strom	650	2004	2006	**163720574** **JTF520.15**	**163721218** **JTR1792.47**	**163718321** **JTC525X1R116RL**		**JTK002360**
DL650 V-Strom	650	2007	2012	**163720574** **JTF520.15**	**163721218** **JTR1792.47**	**163718322** **JTC525X1R118RL**		**JTK002470**
DL650 V-Strom X	650	2010	2011	**163720574** **JTF520.15**	**163721218** **JTR1792.47**	**163718322** **JTC525X1R118RL**		**JTK002470**
GSF650 Bandit	650	2005	2006	**163720552** **JTF513.15**	**163722013** **JTR829.47**	**163718388** **JTC530X1R112RL**		**JTK003140**
GSF650 Bandit	650	2007	2009	**163720574** **JTF520.15**	**163721900** **JTR807.48**	**163718322** **JTC525X1R118RL**		**JTK002500**
GSF650 Bandit	650	2010	2011	**163720574** **JTF520.15**	**163721900** **JTR807.48**	**163718343** **JTC525Z3-118RL**		**JTK002510**
GSF650 S Bandit Traveller	650	2010	2010	**163720574** **JTF520.15**	**163721900** **JTR807.48**	**163718322** **JTC525X1R118RL**		**JTK002500**
GSF650 SA Bandit (ABS)	650	2005	2006	**163720552** **JTF513.15**	**163722013** **JTR829.47**	**163718390** **JTC530X1R116RL**		**JTK003390**
GSF650 SA Bandit (ABS)	650	2007	2015	**163720574** **JTF520.15**	**163721900** **JTR807.48**	**163718343** **JTC525Z3-118RL**		**JTK002510**
GSX650 F/FA	650	2008	2015	**163720574** **JTF520.15**	**163721900** **JTR807.48**	**163718343** **JTC525Z3-118RL**		**JTK002510**
GSX650 F/FA	650	2008	2016	**163720574** **JTF520.15**	**163721900** **JTR807.48**	**163718322** **JTC525X1R118RL**		**JTK002500**
SFV650 AZ Gladius	650	2013	2013	**163720632** **JTF565.15**	**163721992** **JTR823.46**	**163718254** **JTC520X1R2-112DL**		**JTK004560**
SFV650 Gladius	650	2009	2015	**163720632** **JTF565.15**	**163721992** **JTR823.46**	**163718254** **JTC520X1R2-112DL**		**JTK004560**
SV650	650	1999	2008	**163720574** **JTF520.15**	**163721897** **JTR807.45**	**163718318** **JTC525X1R110RL**		**JTK001940**
SV650	650	2016	2018	**163720632** **JTF565.15**	**163721992** **JTR823.46**	**163718276** **JTC520Z3-112RL**		**JTK000970**
SV650 A ABS	650	2016	2018	**163720632** **JTF565.15**	**163721992** **JTR823.46**	**163718276** **JTC520Z3-112RL**		**JTK000970**
SV650 A/SA(ABS)	650	2007	2010	**163720574** **JTF520.15**	**163721897** **JTR807.45**	**163718320** **JTC525X1R114RL**		**JTK002240**
SV650 S	650	1999	2009	**163720574** **JTF520.15**	**163721896** **JTR807.44**	**163718317** **JTC525X1R108RL**		**JTK001770**
SV650 S	650	2010	2013	**163720574** **JTF520.15**	**163721897** **JTR807.45**	**163718338** **JTC525Z3-108RL**		**JTK001780**
XF650 Freewind	650	1997	2002	**163720145** **JTF1448.15**	**163721209** **JTR1791.43**	**163718318** **JTC525X1R110RL**		**JTK001930**
GSR750 (ABS)	750	2011	2016	**163720576** **JTF520.17**	**163721214** **JTR1792.42**	**163718319** **JTC525X1R112RL**		**JTK004570**
GSR750 Z (ABS)	750	2016	2017	**163720576** **JTF520.17**	**163721214** **JTR1792.42**	**163718319** **JTC525X1R112RL**		**JTK004570**
GSX750 F	750	1989	1998	**163720552** **JTF513.15**	**163722013** **JTR829.47**	**163718391** **JTC530X1R118RL**		**JTK003510**
GSX750 F	750	1999	2006	**163720552** **JTF513.15**	**163722011** **JTR829.45**	**163718390** **JTC530X1R116RL**		**JTK003370**
GSX-R750	750	1992	1995	**163720552** **JTF513.15**	**163721956** **JTR816.42**	**163718405** **JTC530Z3-108RL**		**JTK002890**
GSX-R750	750	2006	2010	**163720576** **JTF520.17**	**163721217** **JTR1792.45**	**163718342** **JTC525Z3-116RL**		**JTK002430**
GSX-R750	750	2011	2018	**163720576** **JTF520.17**	**163721306** **JTR1876.45**	**163718342** **JTC525Z3-116RL**		**JTK002440**
GSX-R750 Fuel Injection	750	2004	2005	**163720576** **JTF520.17**	**163721215** **JTR1792.43**	**163718339** **JTC525Z3-110RL**		**JTK002040**
GSX-R750 Fuel Injection SRAD	750	1998	1999	**163720575** **JTF520.16**	**163721705** **JTR498.44**	**163718339** **JTC525Z3-110RL**		**JTK001970**
GSX-R750 Fuel Injection SRAD	750	2000	2003	**163720576** **JTF520.17**	**163721214** **JTR1792.42**	**163718339** **JTC525Z3-110RL**		**JTK002030**
GSX-R750 Moto GP	750	2016	2016	**163720576** **JTF520.17**	**163721306** **JTR1876.45**	**163718342** **JTC525Z3-116RL**		**JTK002440**
GSX-R750 SRAD	750	1996	1997	**163720552** **JTF513.15**	**163721712** **JTR499.43**	**163718405** **JTC530Z3-108RL**		**JTK002910**
GSX-S750	750	2015	2016	**163720576** **JTF520.17**	**163721214** **JTR1792.42**	**163718340** **JTC525Z3-112RL**		**JTK002190**

Modello *Model*	**CC**	**Da** *From*	**A** *To*	**Pignone Codice RMS - JT** *Front Sprocket RMS - JT Code*	**Corona Codice RMS - JT** *Rear Sprocket RMS - JT Code*	**Catena Codice RMS - JT** *Chain RMS - JT Code*	**Carrier Codice RMS - JT** *Carrier RMS - JT Code*	**Codice Kit** *Kit Code*
GSX-S750	750	2017	2018	**163720576 JTF520.17**	**163721305 JTR1876.43**	**163718341 JTC525Z3-114RL**		**JTK004580**
GSX-S750 Z	750	2015	2016	**163720576 JTF520.17**	**163721214 JTR1792.42**	**163718340 JTC525Z3-112RL**		**JTK002190**
GSX-S750 Z	750	2017	2017	**163720576 JTF520.17**	**163721305 JTR1876.43**	**163718341 JTC525Z3-114RL**		**JTK004580**
GSX-S750 Z	750	2018	2018	**163720576 JTF520.17**	**163721305 JTR1876.43**	**163718341 JTC525Z3-114RL**		**JTK004580**
VZ800 Marauder	800	1997	2004	**163720552 JTF513.15**	**163722014 JTR829.48**	**163718409 JTC530Z3-116RL**		**JTK003400**
DL1000 SE V-Strom	1000	2010	2010	**163720576 JTF520.17**	**163721214 JTR1792.42**	**163718340 JTC525Z3-112RL**		**JTK002190**
DL1000 V-Strom	1000	2002	2010	**163720576 JTF520.17**	**163721214 JTR1792.42**	**163718340 JTC525Z3-112RL**		**JTK002190**
DL1000 V-Strom ABS	1000	2014	2016	**163720576 JTF520.17**	**163721214 JTR1792.42**	**163718344 JTC525Z3-120RL**		**JTK004590**
DL1000 V-Strom ABS Adventure	1000	2015	2018	**163720576 JTF520.17**	**163721214 JTR1792.42**	**163718344 JTC525Z3-120RL**		**JTK004590**
DL1000 V-Strom ABS Desert	1000	2016	2016	**163720576 JTF520.17**	**163721214 JTR1792.42**	**163718344 JTC525Z3-120RL**		**JTK004590**
DL1000 V-Strom ABS Sport	1000	2016	2016	**163720576 JTF520.17**	**163721214 JTR1792.42**	**163718344 JTC525Z3-120RL**		**JTK004590**
DL1000 V-Strom XT	1000	2018	2018	**163720576 JTF520.17**	**163721214 JTR1792.42**	**163718344 JTC525Z3-120RL**		**JTK004590**
GSX-R1000	1000	2001	2006	**163720554 JTF513.17**	**163721231 JTR1800.42**	**163718406 JTC530Z3-110RL**		**JTK003090**
GSX-R1000	1000	2007	2008	**163720554 JTF513.17**	**163721232 JTR1800.43**	**163718407 JTC530Z3-112RL**		**JTK003220**
GSX-R1000	1000	2009	2016	**163720459 JTF423.17**	**163721660 JTR479.42**	**163718408 JTC530Z3-114RL**		**JTK003310**
GSX-R1000	1000	2017	2018	**163720813 JTF444.17**	**163721306 JTR1876.45**	**163718411 JTC530Z3-120RL**		**JTK004600**
GSX-R1000 525 Chain Conversion	1000	2007	2008	**163720576 JTF520.17**	**163721215 JTR1792.43**	**163718340 JTC525Z3-112RL**		**JTK002220**
GSX-R1000 R	1000	2017	2018	**163720813 JTF444.17**	**163721306 JTR1876.45**	**163718411 JTC530Z3-120RL**		**JTK004600**
GSX-S1000	1000	2015	2018	**163720576 JTF520.17**	**163722599 JTR1876.44**	**163718342 JTC525Z3-116RL**		**JTK004610**
GSX-S1000 F	1000	2015	2018	**163720576 JTF520.17**	**163722599 JTR1876.44**	**163718342 JTC525Z3-116RL**		**JTK004610**
GSX-S1000 Z	1000	2018	2018	**163720576 JTF520.17**	**163722599 JTR1876.44**	**163718342 JTC525Z3-116RL**		**JTK004610**
SV1000	1000	2003	2007	**163720554 JTF513.17**	**163721229 JTR1800.40**	**163718406 JTC530Z3-110RL**		**JTK003070**
SV1000 S	1000	2003	2007	**163720554 JTF513.17**	**163721229 JTR1800.40**	**163718405 JTC530Z3-108RL**		**JTK002950**
TL1000 R	1000	1998	2002	**163720554 JTF513.17**	**163721709 JTR499.39**	**163718403 JTC530Z3-104RL**		**JTK002830**
TL1000 S	1000	1997	2000	**163720554 JTF513.17**	**163721708 JTR499.38**	**163718403 JTC530Z3-104RL**		**JTK002820**
GSF1200 Bandit	1200	1995	2005	**163720552 JTF513.15**	**163721959 JTR816.45**	**163718406 JTC530Z3-110RL**		**JTK003000**
GSF1200 Bandit	1200	2006	2006	**163720552 JTF513.15**	**163721234 JTR1800.45**	**163718409 JTC530Z3-116RL**		**JTK003380**
GSF1200 S Bandit	1200	1995	2005	**163720552 JTF513.15**	**163721959 JTR816.45**	**163718406 JTC530Z3-110RL**		**JTK003000**
GSX1200 Inazuma	1200	1999	2000	**163720552 JTF513.15**	**163721958 JTR816.44**	**163718407 JTC530Z3-112RL**		**JTK003130**
GSF1250 A Bandit (ABS)	1250	2010	2012	**163720555 JTF513.18**	**163721232 JTR1800.43**	**163718410 JTC530Z3-118RL**		**JTK003580**
GSF1250 Bandit (ABS)	1250	2007	2009	**163720555 JTF513.18**	**163721232 JTR1800.43**	**163718410 JTC530Z3-118RL**		**JTK003580**
GSF1250 S Bandit (ABS)	1250	2007	2016	**163720555 JTF513.18**	**163721232 JTR1800.43**	**163718410 JTC530Z3-118RL**		**JTK003580**
GSF1250 SA Bandit (ABS)	1250	2007	2016	**163720555 JTF513.18**	**163721232 JTR1800.43**	**163718410 JTC530Z3-118RL**		**JTK003580**

Modello *Model*	CC	Da *From*	A *To*	Pignone Codice RMS - JT *Front Sprocket* *RMS - JT Code*	Corona Codice RMS - JT *Rear Sprocket* *RMS - JT Code*	Catena Codice RMS - JT *Chain* *RMS - JT Code*	Carrier Codice RMS - JT *Carrier* *RMS - JT Code*	Codice Kit *Kit Code*
GSF1250 SA Bandit Traveller(ABS)	1250	2010	2010	**163720555 JTF513.18**	**163721232 JTR1800.43**	**163718410 JTC530Z3-118RL**		**JTK003580**
GSX1250 F / FA	1250	2010	2016	**163720555 JTF513.18**	**163721232 JTR1800.43**	**163718411 JTC530Z3-120RL**		**JTK003620**
GSX1250 FA ST	1250	2011	2011	**163720555 JTF513.18**	**163721232 JTR1800.43**	**163718411 JTC530Z3-120RL**		**JTK003620**
GSX1250 FA Z	1250	2016	2016	**163720555 JTF513.18**	**163721232 JTR1800.43**	**163718411 JTC530Z3-120RL**		**JTK003620**
GSX1300 BK BK B-King	1300	2012	2012	**163720460 JTF423.18**	**163721232 JTR1800.43**	**163718410 JTC530Z3-118RL**		**JTK003590**
GSX1300 BK B-King	1300	2008	2011	**163720460 JTF423.18**	**163721232 JTR1800.43**	**163718410 JTC530Z3-118RL**		**JTK003590**
GSX-R1300 R Hayabusa	1300	1999	2007	**163720554 JTF513.17**	**163721710 JTR499.40**	**163718407 JTC530Z3-112RL**		**JTK003200**
GSX-R1300 R Hayabusa	1300	2008	2018	**163720460 JTF423.18**	**163721232 JTR1800.43**	**163718410 JTC530Z3-118RL**		**JTK003590**
GSX-R1300 R Hayabusa Ltd.	1300	2007	2007	**163720554 JTF513.17**	**163721710 JTR499.40**	**163718407 JTC530Z3-112RL**		**JTK003200**
GSX-R1300 RZ Hayabusa	1300	2003	2004	**163720554 JTF513.17**	**163721710 JTR499.40**	**163718407 JTC530Z3-112RL**		**JTK003200**
GSX-R1300 RZ Hayabusa	1300	2016	2016	**163720460 JTF423.18**	**163721232 JTR1800.43**	**163718410 JTC530Z3-118RL**		**JTK003590**
GSX1400	1400	2001	2008	**163720555 JTF513.18**	**163721227 JTR1797.41**	**163718409 JTC530Z3-116RL**		**JTK003490**
TRIUMPH								
600 Daytona	600	2003	2004	**163720030 JTF1182.14**	**163721217 JTR1792.45**	**163718317 JTC525X1R108RL**		**JTK001710**
600 Speed Four	600	2003	2005	**163720030 JTF1182.14**	**163721214 JTR1792.42**	**163718316 JTC525X1R106RL**		**JTK001670**
675 Daytona	675	2006	2017	**163720575 JTF520.16**	**163721337 JTR2014.47**	**163718342 JTC525Z3-116RL**		**JTK002390**
675 Daytona R	675	2011	2017	**163720575 JTF520.16**	**163721337 JTR2014.47**	**163718342 JTC525Z3-116RL**		**JTK002390**
675 Street Triple	675	2008	2016	**163720575 JTF520.16**	**163721337 JTR2014.47**	**163718343 JTC525Z3-118RL**		**JTK002560**
675 Street Triple R	675	2010	2016	**163720575 JTF520.16**	**163721337 JTR2014.47**	**163718343 JTC525Z3-118RL**		**JTK002560**
765 Street Triple R	765	2017	2018	**163720575 JTF520.16**	**163722630 JTR2014.46**	**163718322 JTC525X1R118RL**		**JTK004620**
765 Street Triple R Low	765	2018	2018	**163720575 JTF520.16**	**163722630 JTR2014.46**	**163718322 JTC525X1R118RL**		**JTK004620**
765 Street Triple RS	765	2017	2018	**163720575 JTF520.16**	**163722630 JTR2014.46**	**163718322 JTC525X1R118RL**		**JTK004620**
765 Street Triple S	765	2017	2018	**163720575 JTF520.16**	**163722630 JTR2014.46**	**163718322 JTC525X1R118RL**		**JTK004620**
800 America	800	2003	2006	**163720032 JTF1183.17**	**163721110 JTR1332.42**	**163718319 JTC525X1R112RL**		**JTK002200**
800 Bonneville	800	2002	2006	**163720032 JTF1183.17**	**163721215 JTR1792.43**	**163718315 JTC525X1R104RL**		**JTK001650**
800 Bonneville T100	800	2003	2005	**163720032 JTF1183.17**	**163721215 JTR1792.43**	**163718315 JTC525X1R104RL**		**JTK001650**
800 Bonneville T100 Centennial Edition	800	2002	2002	**163720032 JTF1183.17**	**163721215 JTR1792.43**	**163718315 JTC525X1R104RL**		**JTK001650**
800 Speedmaster	800	2003	2005	**163720032 JTF1183.17**	**163721110 JTR1332.42**	**163718319 JTC525X1R112RL**		**JTK002200**
800 Tiger	800	2011	2016	**163720575 JTF520.16**	**163721338 JTR2014.50**	**163718345 JTC525Z3-122RL**		**JTK002710**
800 Tiger XC	800	2011	2016	**163720575 JTF520.16**	**163721338 JTR2014.50**	**163718346 JTC525Z3-124RL**		**JTK002780**
800 Tiger XC	800	2011	2016	**163720791 JTF520.16RB**	**163722490 JTR2014.50ZBK**	**163718330 JTC525Z3NN124RL**		**JTPRO2780**
800 Tiger XCA	800	2016	2017	**163720575 JTF520.16**	**163721338 JTR2014.50**	**163718325 JTC525X1R124RL**		**JTK004630**
800 Tiger XCX	800	2015	2017	**163720575 JTF520.16**	**163721338 JTR2014.50**	**163718346 JTC525Z3-124RL**		**JTK002780**

Modello *Model*	**CC**	**Da** *From*	**A** *To*	**Pignone Codice RMS - JT** *Front Sprocket RMS - JT Code*	**Corona Codice RMS - JT** *Rear Sprocket RMS - JT Code*	**Catena Codice RMS - JT** *Chain RMS - JT Code*	**Carrier Codice RMS - JT** *Carrier RMS - JT Code*	**Codice Kit** *Kit Code*
800 Tiger XCX	800	2015	2017	**163720791 JTF520.16RB**	**163722490 JTR2014.50ZBK**	**163718330 JTC525Z3NN124RL**		**JTPRO2780**
800 Tiger XR	800	2015	2017	**163720575 JTF520.16**	**163721338 JTR2014.50**	**163718346 JTC525Z3-124RL**		**JTK002780**
800 Tiger XR	800	2015	2017	**163720791 JTF520.16RB**	**163722490 JTR2014.50ZBK**	**163718330 JTC525Z3NN124RL**		**JTPRO2780**
800 Tiger XRT	800	2016	2017	**163720575 JTF520.16**	**163721338 JTR2014.50**	**163718325 JTC525X1R124RL**		**JTK004630**
800 Tiger XRX	800	2015	2017	**163720575 JTF520.16**	**163721338 JTR2014.50**	**163718325 JTC525X1R124RL**		**JTK004630**
865 America	865	2007	2012	**163720032 JTF1183.17**	**163721110 JTR1332.42**	**163718340 JTC525Z3-112RL**		**JTK002210**
865 America	865	2013	2015	**163720033 JTF1183.18**	**163721110 JTR1332.42**	**163718340 JTC525Z3-112RL**		**JTK002230**
865 America (OEM 520 Chain)	865	2015	2017	**163720804 JTF1184.18**	**163722600 JTR2012.42**	**163718276 JTC520Z3-112RL**		**JTK004640**
865 America LT	865	2014	2015	**163720032 JTF1183.17**	**163721110 JTR1332.42**	**163718340 JTC525Z3-112RL**		**JTK002210**
865 America LT (OEM 520 Chain)	865	2014	2017	**163720804 JTF1184.18**	**163722600 JTR2012.42**	**163718276 JTC520Z3-112RL**		**JTK004640**
865 Bonneville	865	2007	2015	**163720033 JTF1183.18**	**163721215 JTR1792.43**	**163718336 JTC525Z3-104RL**		**JTK001660**
865 Bonneville (OEM 520 Chain)	865	2015	2016	**163720804 JTF1184.18**	**163722625 JTR1793.43**	**163718272 JTC520Z3-104RL**		**JTK004650**
865 Bonneville Black	865	2007	2007	**163720033 JTF1183.18**	**163721215 JTR1792.43**	**163718336 JTC525Z3-104RL**		**JTK001660**
865 Bonneville Land Speed Special Edition	865	2015	2015	**163720033 JTF1183.18**	**163721215 JTR1792.43**	**163718336 JTC525Z3-104RL**		**JTK001660**
865 Bonneville Newchurch Special	865	2015	2015	**163720033 JTF1183.18**	**163721215 JTR1792.43**	**163718336 JTC525Z3-104RL**		**JTK001660**
865 Bonneville SE	865	2010	2012	**163720033 JTF1183.18**	**163721215 JTR1792.43**	**163718336 JTC525Z3-104RL**		**JTK001660**
865 Bonneville Steve Mc Queen Edition	865	2013	2014	**163720033 JTF1183.18**	**163721215 JTR1792.43**	**163718336 JTC525Z3-104RL**		**JTK001660**
865 Bonneville T100	865	2006	2015	**163720033 JTF1183.18**	**163721215 JTR1792.43**	**163718336 JTC525Z3-104RL**		**JTK001660**
865 Bonneville T100 (OEM 520 Chain)	865	2015	2016	**163720804 JTF1184.18**	**163722625 JTR1793.43**	**163718272 JTC520Z3-104RL**		**JTK004650**
865 Bonneville T100 110th Anniversary Edition	865	2013	2014	**163720033 JTF1183.18**	**163721215 JTR1792.43**	**163718336 JTC525Z3-104RL**		**JTK001660**
865 Bonneville T100 Black	865	2015	2015	**163720033 JTF1183.18**	**163721215 JTR1792.43**	**163718336 JTC525Z3-104RL**		**JTK001660**
865 Bonneville T100 Spirit Special	865	2015	2015	**163720033 JTF1183.18**	**163721215 JTR1792.43**	**163718336 JTC525Z3-104RL**		**JTK001660**
865 Scrambler	865	2015	2015	**163720033 JTF1183.18**	**163721215 JTR1792.43**	**163718337 JTC525Z3-106RL**		**JTK001700**
865 Scrambler	865	2016	2017	**163720804 JTF1184.18**	**163722625 JTR1793.43**	**163718273 JTC520Z3-106RL**		**JTK004660**
865 Speedmaster	865	2006	2015	**163720033 JTF1183.18**	**163721110 JTR1332.42**	**163718340 JTC525Z3-112RL**		**JTK002230**
865 Speedmaster	865	2016	2017	**163720804 JTF1184.18**	**163722600 JTR2012.42**	**163718276 JTC520Z3-112RL**		**JTK004640**
865 Thruxton	865	2007	2015	**163720033 JTF1183.18**	**163721215 JTR1792.43**	**163718336 JTC525Z3-104RL**		**JTK001660**
865 Thruxton Ace Cafe	865	2015	2015	**163720033 JTF1183.18**	**163721215 JTR1792.43**	**163718336 JTC525Z3-104RL**		**JTK001660**
T509 Speed Triple	885	1997	1998	**163720027 JTF1180.18**	**163722488 JTR2011.43ZBK**	**163718533 JTC530Z3NN108RL**		**JTPRO2980**
T595 Daytona	885	1997	1998	**163720027 JTF1180.18**	**163722488 JTR2011.43ZBK**	**163718533 JTC530Z3NN108RL**		**JTPRO2980**
T509 Speed Triple	900	1997	1998	**163720027 JTF1180.18**	**163721333 JTR2011.43**	**163718405 JTC530Z3-108RL**		**JTK002980**
955 Speed Triple	955	1999	2001	**163720027 JTF1180.18**	**163721333 JTR2011.43**	**163718405 JTC530Z3-108RL**		**JTK002980**
955 Speed Triple	955	1999	2001	**163720027 JTF1180.18**	**163722488 JTR2011.43ZBK**	**163718533 JTC530Z3NN108RL**		**JTPRO2980**

Modello *Model*	**CC**	**Da** *From*	**A** *To*	**Pignone Codice RMS - JT** *Front Sprocket RMS - JT Code*	**Corona Codice RMS - JT** *Rear Sprocket RMS - JT Code*	**Catena Codice RMS - JT** *Chain RMS - JT Code*	**Carrier Codice RMS - JT** *Carrier RMS - JT Code*	**Codice Kit** *Kit Code*
955 Speed Triple	955	2002	2003	**163720027 JTF1180.18**	**163721332 JTR2011.42**	**163718405 JTC530Z3-108RL**		**JTK002970**
955 Sprint RS	955	2000	2003	**163720028 JTF1180.19**	**163721232 JTR1800.43**	**163718405 JTC530Z3-108RL**		**JTK002990**
955 Sprint ST	955	1999	2004	**163720027 JTF1180.18**	**163721333 JTR2011.43**	**163718405 JTC530Z3-108RL**		**JTK002980**
955 Sprint ST	955	1999	2004	**163720027 JTF1180.18**	**163722488 JTR2011.43ZBK**	**163718533 JTC530Z3NN108RL**		**JTPRO2980**
955 Tiger	955	2001	2004	**163720027 JTF1180.18**	**163721328 JTR2010.46**	**163718408 JTC530Z3-114RL**		**JTK003350**
955 Tiger	955	2005	2006	**163720027 JTF1180.18**	**163721235 JTR1800.46**	**163718408 JTC530Z3-114RL**		**JTK003360**
955i Daytona	955	1999	2001	**163720027 JTF1180.18**	**163721332 JTR2011.42**	**163718404 JTC530Z3-106RL**		**JTK002860**
955i Daytona	955	2003	2006	**163720027 JTF1180.18**	**163721332 JTR2011.42**	**163718404 JTC530Z3-106RL**		**JTK002860**
955i Daytona (March 2001 >)	955	2001	2002	**163720028 JTF1180.19**	**163721233 JTR1800.44**	**163718404 JTC530Z3-106RL**		**JTK002880**
955i Daytona (Special Edition)	955	2004	2004	**163720027 JTF1180.18**	**163721332 JTR2011.42**	**163718404 JTC530Z3-106RL**		**JTK002860**
955i Daytona Centennial Edition	955	2002	2002	**163720028 JTF1180.19**	**163721332 JTR2011.42**	**163718404 JTC530Z3-106RL**		**JTK002870**
T595 Daytona	1000	1997	1998	**163720027 JTF1180.18**	**163721333 JTR2011.43**	**163718405 JTC530Z3-108RL**		**JTK002980**
1050 Speed 94	1050	2016	2016	**163720027 JTF1180.18**	**163721333 JTR2011.43**	**163718405 JTC530Z3-108RL**		**JTK002980**
1050 Speed 94 R	1050	2016	2016	**163720027 JTF1180.18**	**163721333 JTR2011.43**	**163718405 JTC530Z3-108RL**		**JTK002980**
1050 Speed Triple	1050	2005	2011	**163720027 JTF1180.18**	**163721332 JTR2011.42**	**163718404 JTC530Z3-106RL**		**JTK002860**
1050 Speed Triple	1050	2012	2015	**163720027 JTF1180.18**	**163721333 JTR2011.43**	**163718405 JTC530Z3-108RL**		**JTK002980**
1050 Speed Triple	1050	2012	2015	**163720027 JTF1180.18**	**163722488 JTR2011.43ZBK**	**163718533 JTC530Z3NN108RL**		**JTPRO2980**
1050 Speed Triple R	1050	2012	2015	**163720027 JTF1180.18**	**163722488 JTR2011.43ZBK**	**163718533 JTC530Z3NN108RL**		**JTPRO2980**
1050 Speed Triple R	1050	2012	2018	**163720027 JTF1180.18**	**163721333 JTR2011.43**	**163718405 JTC530Z3-108RL**		**JTK002980**
1050 Speed Triple S	1050	2016	2016	**163720027 JTF1180.18**	**163721333 JTR2011.43**	**163718405 JTC530Z3-108RL**		**JTK002980**
1050 Sprint GT / SE	1050	2011	2018	**163720028 JTF1180.19**	**163721332 JTR2011.42**	**163718409 JTC530Z3-116RL**		**JTK003500**
1050 Sprint ST	1050	2005	2011	**163720028 JTF1180.19**	**163721332 JTR2011.42**	**163718404 JTC530Z3-106RL**		**JTK002870**
1050 Tiger	1050	2007	2014	**163720027 JTF1180.18**	**163721233 JTR1800.44**	**163718408 JTC530Z3-114RL**		**JTK003330**
1050 Tiger SE	1050	2009	2014	**163720027 JTF1180.18**	**163721233 JTR1800.44**	**163718408 JTC530Z3-114RL**		**JTK003330**
1050 Tiger Sport	1050	2014	2016	**163720027 JTF1180.18**	**163721335 JTR2011.45**	**163718411 JTC530Z3-120RL**		**JTK004670**
1200 Bonneville Bobber	1200	2017	2018	**163720854 JTF1186.17RB**	**163722627 JTR2014.37**	**163718338 JTC525Z3-108RL**		**JTK004680**
1200 Bonneville Bobber Black	1200	2018	2018	**163720854 JTF1186.17RB**	**163722627 JTR2014.37**	**163718338 JTC525Z3-108RL**		**JTK004680**
1200 Bonneville Speedmaster	1200	2018	2018	**163720854 JTF1186.17RB**	**163722627 JTR2014.37**	**163718338 JTC525Z3-108RL**		**JTK004680**
1200 Bonneville T120	1200	2016	2018	**163720854 JTF1186.17RB**	**163722627 JTR2014.37**	**163718334 JTC525Z3-100RL**		**JTK004690**
1200 Bonneville T120 Black	1200	2016	2018	**163720854 JTF1186.17RB**	**163722627 JTR2014.37**	**163718334 JTC525Z3-100RL**		**JTK004690**
1200 Thruxton	1200	2016	2018	**163720853 JTF1186.16RB**	**163722629 JTR2014.42**	**163718334 JTC525Z3-100RL**		**JTK004700**
1200 Thruxton R	1200	2016	2018	**163720853 JTF1186.16RB**	**163722629 JTR2014.42**	**163718334 JTC525Z3-100RL**		**JTK004700**

Modello *Model*	CC	Da *From*	A *To*	Pignone Codice RMS - JT *Front Sprocket* *RMS - JT Code*	Corona Codice RMS - JT *Rear Sprocket* *RMS - JT Code*	Catena Codice RMS - JT *Chain* *RMS - JT Code*	Carrier Codice RMS - JT *Carrier* *RMS - JT Code*	Codice Kit *Kit Code*
YAMAHA								
DT50 R	50	2003	2006	**163720008** **JTF1120.11**	**163721024** **JTR1131.50**	**163718035** **JTC420HDR126SL**		**JTK000040**
DT50 SM Supermotard	50	2003	2006	**163720008** **JTF1120.11**	**163721023** **JTR1131.48**	**163718035** **JTC420HDR126SL**		**JTK000030**
TZR50 RR	50	1997	2006	**163720009** **JTF1120.12**	**163721017** **JTR1078.47**	**163718038** **JTC420HDR132SL**		**JTK000170**
TZR50 X-Power	50	1996	2006	**163720009** **JTF1120.12**	**163721017** **JTR1078.47**	**163718037** **JTC420HDR130SL**		**JTK000100**
MT125 (ABS)	125	2015	2015	**163720180** **JTF1550.14**	**163721278** **JTR1844.48**	**163718075** **JTC428HDR132SL**		**JTK000270**
MT125 (ABS)	125	2015	2015	**163720180** **JTF1550.14**	**163722481** **JTR1844.48ZBK**	**163718498** **JTC428HPOGB132SL**		**JTPRO0270**
WR125 R	125	2009	2015	**163720180** **JTF1550.14**	**163722079** **JTR839.53**	**163718076** **JTC428HDR134SL**		**JTK000280**
WR125 R	125	2009	2015	**163720180** **JTF1550.14**	**163722563** **JTR839.53ZBK**	**163718499** **JTC428HPOGB134SL**		**JTPRO0280**
WR125 X	125	2009	2015	**163720180** **JTF1550.14**	**163722079** **JTR839.53**	**163718076** **JTC428HDR134SL**		**JTK000280**
WR125 X	125	2009	2015	**163720180** **JTF1550.14**	**163722563** **JTR839.53ZBK**	**163718499** **JTC428HPOGB134SL**		**JTPRO0280**
XT125 R	125	2008	2011	**163720599** **JTF548.14**	**163721037** **JTR1134.50**	**163718073** **JTC428HDR128SL**		**JTK000250**
XT125 X	125	2008	2011	**163720599** **JTF548.14**	**163721036** **JTR1134.48**	**163718072** **JTC428HDR126SL**		**JTK000240**
YBR125	125	2007	2014	**163720599** **JTF548.14**	**163722075** **JTR838.45**	**163718068** **JTC428HDR118SL**		**JTK000210**
YBR125 Custom	125	2008	2014	**163720599** **JTF548.14**	**163722074** **JTR838.43**	**163718068** **JTC428HDR118SL**		**JTK000200**
YZF-R125	125	2008	2018	**163720180** **JTF1550.14**	**163721278** **JTR1844.48**	**163718075** **JTC428HDR132SL**		**JTK000270**
YZF-R125	125	2008	2018	**163720180** **JTF1550.14**	**163722481** **JTR1844.48ZBK**	**163718498** **JTC428HPOGB132SL**		**JTPRO0270**
YZF-R125 50th Anniversary Edition	125	2012	2012	**163720180** **JTF1550.14**	**163721278** **JTR1844.48**	**163718075** **JTC428HDR132SL**		**JTK000270**
YZF-R125 50th Anniversary Edition	125	2012	2012	**163720180** **JTF1550.14**	**163722481** **JTR1844.48ZBK**	**163718498** **JTC428HPOGB132SL**		**JTPRO0270**
XV250 S Virago	250	1995	2008	**163720653** **JTF569.16**	**163722150** **JTR857.45**	**163718255** **JTC520X1R2-114DL**		**JTK001150**
XV250 V-Star	250	2008	2017	**163720653** **JTF569.16**	**163722150** **JTR857.45**	**163718255** **JTC520X1R2-114DL**		**JTK001150**
YZ F	250	2014	2018	**163720214** **JTF1590.13SC**	**163721449** **JTR251.50**	**163718179** **JTC520X1RGB114DL**		**JTK003680**
YZF-R3	300	2015	2018	**163720631** **JTF565.14SC**	**163721679** **JTR486.43**	**163718254** **JTC520X1R2-112DL**		**JTK001070**
YZ	450	2007	2014	**163720630** **JTF565.13SC**	**163721448** **JTR251.49**	**163718162** **JTC520HDSNN114SL**		**JTK003700**
FZ6	600	2004	2009	**163720798** **JTF580.16RB**	**163722532** **JTR479.46ZBK**	**163718535** **JTC530Z3NN118RL**		**JTPRO3530**
FZ6 Fazer	600	2004	2008	**163720682** **JTF580.16**	**163721664** **JTR479.46**	**163718391** **JTC530X1R118RL**		**JTK003530**
FZ6 Fazer	600	2004	2008	**163720798** **JTF580.16RB**	**163722532** **JTR479.46ZBK**	**163718535** **JTC530Z3NN118RL**		**JTPRO3530**
FZ6 Fazer S2 ABS	600	2007	2009	**163720682** **JTF580.16**	**163721664** **JTR479.46**	**163718391** **JTC530X1R118RL**		**JTK003530**
FZ6 Fazer S2 ABS	600	2007	2009	**163720798** **JTF580.16RB**	**163722532** **JTR479.46ZBK**	**163718535** **JTC530Z3NN118RL**		**JTPRO3530**
FZ6 S2	600	2007	2009	**163720682** **JTF580.16**	**163721664** **JTR479.46**	**163718391** **JTC530X1R118RL**		**JTK003530**
FZ6 S2	600	2007	2009	**163720798** **JTF580.16RB**	**163722532** **JTR479.46ZBK**	**163718535** **JTC530Z3NN118RL**		**JTPRO3530**
FZS600 Fazer	600	1998	2003	**163720552** **JTF513.15**	**163722163** **JTR859.48**	**163718387** **JTC530X1R110RL**		**JTK003020**
FZS600 SP Fazer	600	2000	2001	**163720552** **JTF513.15**	**163722163** **JTR859.48**	**163718387** **JTC530X1R110RL**		**JTK003020**

Modello *Model*	**CC**	**Da** *From*	**A** *To*	**Pignone Codice RMS - JT** *Front Sprocket RMS - JT Code*	**Corona Codice RMS - JT** *Rear Sprocket RMS - JT Code*	**Catena Codice RMS - JT** *Chain RMS - JT Code*	**Carrier Codice RMS - JT** *Carrier RMS - JT Code*	**Codice Kit** *Kit Code*
XJ6	600	2009	2015	**163720224 JTF1595.16**	**163722601 JTR305.46**	**163718257 JTC520X1R2-118DL**		**JTK001230**
XJ6 ABS	600	2009	2015	**163720224 JTF1595.16**	**163722601 JTR305.46**	**163718257 JTC520X1R2-118DL**		**JTK001230**
XJ6 Diversion	600	2009	2015	**163720224 JTF1595.16**	**163722601 JTR305.46**	**163718257 JTC520X1R2-118DL**		**JTK001230**
XJ6 Diversion ABS	600	2009	2015	**163720224 JTF1595.16**	**163722601 JTR305.46**	**163718257 JTC520X1R2-118DL**		**JTK001230**
XJ6 Diversion F ABS	600	2010	2015	**163720224 JTF1595.16**	**163722601 JTR305.46**	**163718257 JTC520X1R2-118DL**		**JTK001230**
XJ6 SP	600	2013	2013	**163720224 JTF1595.16**	**163722601 JTR305.46**	**163718257 JTC520X1R2-118DL**		**JTK001230**
XJ600 N	600	1995	2003	**163720684 JTF582.16**	**163722141 JTR855.48**	**163718253 JTC520X1R2-110DL**		**JTK000890**
XJ600 N	600	1998	2000	**163720684 JTF582.16**	**163722139 JTR855.46**	**163718252 JTC520X1R2-108DL**		**JTK000700**
XJ600 S Diversion	600	1992	2003	**163720684 JTF582.16**	**163722141 JTR855.48**	**163718253 JTC520X1R2-110DL**		**JTK000890**
XJ600 S Diversion	600	1999	2000	**163720684 JTF582.16**	**163722139 JTR855.46**	**163718253 JTC520X1R2-110DL**		**JTK000850**
XT600 E	600	1989	1998	**163720670 JTF577.15**	**163722150 JTR857.45**	**163718251 JTC520X1R2-106DL**		**JTK000570**
XT600 E	600	1999	2003	**163720197 JTF1577.15**	**163722150 JTR857.45**	**163718251 JTC520X1R2-106DL**		**JTK000580**
XT600 H	600	1987	1989	**163720670 JTF577.15**	**163722145 JTR857.39**	**163718250 JTC520X1R2-104DL**		**JTK000490**
XT600 K	600	1991	1994	**163720670 JTF577.15**	**163722145 JTR857.39**	**163718249 JTC520X1R2-102DL**		**JTK000440**
XT600 Z Tenere	600	1989	1994	**163720670 JTF577.15**	**163722150 JTR857.45**	**163718251 JTC520X1R2-106DL**		**JTK000570**
YZF600R	600	2005	2007	**163720552 JTF513.15**	**163722162 JTR859.47**	**163718386 JTC530X1R108RL**		**JTK002920**
YZF600R Thunder Cat	600	1996	2003	**163720552 JTF513.15**	**163722162 JTR859.47**	**163718386 JTC530X1R108RL**		**JTK002920**
YZF-R6	600	2006	2018	**163720207 JTF1586.16**	**163721306 JTR1876.45**	**163718341 JTC525Z3-114RL**		**JTK002300**
YZF-R6 <<< 530 Chain Conversion	600	1999	2002	**163720682 JTF580.16**	**163721298 JTR1871.48**	**163718390 JTC530X1R116RL**		**JTK003450**
YZF-R6 <<< 530 Chain Conversion	600	2003	2005	**163720682 JTF580.16**	**163721666 JTR479.48**	**163718390 JTC530X1R116RL**		**JTK003460**
YZF-R6 50th Anniversary Edition	600	2012	2012	**163720207 JTF1586.16**	**163721306 JTR1876.45**	**163718341 JTC525Z3-114RL**		**JTK002300**
YZF-R6 50th Anniversary Edition >>> 530 Chain Conversion	600	2012	2012	**163720682 JTF580.16**	**163721663 JTR479.45**	**163718389 JTC530X1R114RL**		**JTK003280**
YZF-R6 S <<< 530 Chain Conversion	600	2006	2010	**163720682 JTF580.16**	**163721666 JTR479.48**	**163718390 JTC530X1R116RL**		**JTK003460**
MT-03	660	2006	2012	**163720357 JTF308.15**	**163722140 JTR855.47**	**163718276 JTC520Z3-112RL**		**JTK000980**
MT-03 (MTN320-A)	660	2016	2017	**163720827 JTF565.14**	**163721679 JTR486.43**	**163718254 JTC520X1R2-112DL**		**JTK004710**
XT660 R	660	2004	2015	**163720357 JTF308.15**	**163722138 JTR855.45**	**163718275 JTC520Z3-110RL**		**JTK000800**
XT660 R	660	2004	2015	**163720774 JTF308.15RB**	**163722567 JTR855.45ZBK**	**163718231 JTC520X1R2NN110DL**		**JTPRO0800**
XT660 X Super Motard	660	2004	2015	**163720357 JTF308.15**	**163722138 JTR855.45**	**163718275 JTC520Z3-110RL**		**JTK000800**
XT660 X Super Motard	660	2004	2015	**163720774 JTF308.15RB**	**163722567 JTR855.45ZBK**	**163718231 JTC520X1R2NN110DL**		**JTPRO0800**
XTZ660 Tenere	660	1991	1995	**163720670 JTF577.15**	**163722150 JTR857.45**	**163718275 JTC520Z3-110RL**		**JTK000810**
XTZ660 Tenere	660	1996	1998	**163720670 JTF577.15**	**163722151 JTR857.46**	**163718275 JTC520Z3-110RL**		**JTK000830**
XTZ660 Z Tenere	660	2008	2015	**163720357 JTF308.15**	**163722138 JTR855.45**	**163718275 JTC520Z3-110RL**		**JTK000800**
XTZ660 Z Tenere	660	2008	2015	**163720774 JTF308.15RB**	**163722567 JTR855.45ZBK**	**163718231 JTC520X1R2NN110DL**		**JTPRO0800**

Modello *Model*	**CC**	**Da** *From*	**A** *To*	**Pignone Codice RMS - JT** *Front Sprocket RMS - JT Code*	**Corona Codice RMS - JT** *Rear Sprocket RMS - JT Code*	**Catena Codice RMS - JT** *Chain RMS - JT Code*	**Carrier Codice RMS - JT** *Carrier RMS - JT Code*	**Codice Kit** *Kit Code*
XTZ660 Z Tenere ABS	660	2011	2015	**163720357 JTF308.15**	**163722138 JTR855.45**	**163718275 JTC520Z3-110RL**		**JTK000800**
XTZ660 Z Tenere ABS	660	2011	2015	**163720774 JTF308.15RB**	**163722567 JTR855.45ZBK**	**163718231 JTC520X1R2NN110DL**		**JTPRO0800**
MT-07 (ABS)	690	2014	2019	**163720217 JTF1591.16**	**163721305 JTR1876.43**	**163718405 JTC530Z3-108RL**		**JTK004720**
FZ-07	700	2015	2017	**163720217 JTF1591.16**	**163721305 JTR1876.43**	**163718405 JTC530Z3-108RL**		**JTK004720**
MT-07 Motocage (ABS)	700	2015	2016	**163720217 JTF1591.16**	**163721305 JTR1876.43**	**163718405 JTC530Z3-108RL**		**JTK004720**
XSR700	700	2016	2018	**163720217 JTF1591.16**	**163721305 JTR1876.43**	**163718405 JTC530Z3-108RL**		**JTK004720**
XTZ750 Super Tenere	750	1990	1998	**163720674 JTF578.16**	**163722139 JTR855.46**	**163718276 JTC520Z3-112RL**		**JTK001030**
YZF750 R <<< 530 Chain Conversion	750	1993	1997	**163720682 JTF580.16**	**163722159 JTR859.43**	**163718385 JTC530X1R106RL**		**JTK002850**
YZF750 SP <<< 530 Chain Conversion	750	1993	1997	**163720682 JTF580.16**	**163722155 JTR859.39**	**163718384 JTC530X1R104RL**		**JTK002800**
YZF-R7	750	1999	2001	**163720683 JTF580.17**	**163721661 JTR479.43**	**163718410 JTC530Z3-118RL**		**JTK003560**
FZ8 N/NA	800	2010	2015	**163720217 JTF1591.16**	**163721560 JTR300.46**	**163718345 JTC525Z3-122RL**		**JTK002700**
FZ8 S/SA Fazer 8	800	2010	2015	**163720217 JTF1591.16**	**163721560 JTR300.46**	**163718345 JTC525Z3-122RL**		**JTK002700**
900 Tracer (MTT850)	850	2019	2019	**163720217 JTF1591.16**	**163721306 JTR1876.45**	**163718343 JTC525Z3-118RL**		**JTK004730**
900 Tracer GT (MTT850)	850	2019	2019	**163720217 JTF1591.16**	**163721306 JTR1876.45**	**163718343 JTC525Z3-118RL**		**JTK004730**
MT-09	850	2014	2015	**163720765 JTF1591.16RB**	**163721306 JTR1876.45**	**163718327 JTC525Z3NN110RL**		**JTPRO1990**
MT-09 (MTN850 A)	850	2014	2018	**163720217 JTF1591.16**	**163721306 JTR1876.45**	**163718339 JTC525Z3-110RL**		**JTK001990**
MT-09 SP (MTN850 D)	850	2018	2018	**163720217 JTF1591.16**	**163721306 JTR1876.45**	**163718339 JTC525Z3-110RL**		**JTK001990**
MT-09 Sport Tracker (ABS)	850	2015	2015	**163720765 JTF1591.16RB**	**163721306 JTR1876.45**	**163718327 JTC525Z3NN110RL**		**JTPRO1990**
MT-09 Sport Tracker (ABS)	850	2015	2016	**163720217 JTF1591.16**	**163721306 JTR1876.45**	**163718339 JTC525Z3-110RL**		**JTK001990**
MT-09 SR Street Rally (ABS)	850	2014	2015	**163720765 JTF1591.16RB**	**163721306 JTR1876.45**	**163718327 JTC525Z3NN110RL**		**JTPRO1990**
MT-09 SR Street Rally (ABS)	850	2014	2016	**163720217 JTF1591.16**	**163721306 JTR1876.45**	**163718339 JTC525Z3-110RL**		**JTK001990**
MT-09 Tracer	850	2016	2017	**163720217 JTF1591.16**	**163721306 JTR1876.45**	**163718339 JTC525Z3-110RL**		**JTK001990**
TDM850	850	1991	1995	**163720575 JTF520.16**	**163722182 JTR867.44**	**163718320 JTC525X1R114RL**		**JTK002290**
TDM850	850	1996	1998	**163720208 JTF1586.17**	**163722180 JTR867.42**	**163718320 JTC525X1R114RL**		**JTK002320**
TDM850	850	1999	2001	**163720575 JTF520.16**	**163722181 JTR867.43**	**163718320 JTC525X1R114RL**		**JTK002280**
TRX850	850	1996	2000	**163720208 JTF1586.17**	**163721557 JTR300.39**	**163718318 JTC525X1R110RL**		**JTK002010**
XSR900 (MTM850)	850	2016	2017	**163720217 JTF1591.16**	**163721306 JTR1876.45**	**163718339 JTC525Z3-110RL**		**JTK001990**
TDM900	900	2002	2013	**163720217 JTF1591.16**	**163721558 JTR300.42**	**163718343 JTC525Z3-118RL**		**JTK002520**
TDM900 A ABS	900	2005	2013	**163720217 JTF1591.16**	**163721558 JTR300.42**	**163718343 JTC525Z3-118RL**		**JTK002520**
FZ1 Fazer (ABS)	1000	2015	2015	**163720679 JTF579.17**	**163721663 JTR479.45**	**163718412 JTC530Z3-122RL**		**JTK003630**
FZ1 N,NA	1000	2006	2014	**163720679 JTF579.17**	**163721663 JTR479.45**	**163718412 JTC530Z3-122RL**		**JTK003630**
FZ1 S,SA,SZ Fazer ABS	1000	2006	2014	**163720679 JTF579.17**	**163721663 JTR479.45**	**163718412 JTC530Z3-122RL**		**JTK003630**
FZS1000 Fazer	1000	2001	2005	**163720678 JTF579.16**	**163721662 JTR479.44**	**163718409 JTC530Z3-116RL**		**JTK003440**

Modello *Model*	**CC**	**Da** *From*	**A** *To*	**Pignone** **Codice RMS - JT** *Front Sprocket* *RMS - JT Code*	**Corona** **Codice RMS - JT** *Rear Sprocket* *RMS - JT Code*	**Catena** **Codice RMS - JT** *Chain* *RMS - JT Code*	**Carrier** **Codice RMS - JT** *Carrier* *RMS - JT Code*	**Codice Kit** *Kit Code*
MT-10	1000	2016	2019	**163720217** **JTF1591.16**	**163721305** **JTR1876.43**	**163718341** **JTC525Z3-114RL**		**JTK004740**
MT-10 SP	1000	2017	2019	**163720217** **JTF1591.16**	**163721305** **JTR1876.43**	**163718341** **JTC525Z3-114RL**		**JTK004740**
YZF R1	1000	1998	2003	**163720678** **JTF579.16**	**163721661** **JTR479.43**	**163718408** **JTC530Z3-114RL**		**JTK003270**
YZF R1	1000	2004	2005	**163720679** **JTF579.17**	**163721663** **JTR479.45**	**163718409** **JTC530Z3-116RL**		**JTK003480**
YZF R1	1000	2006	2008	**163720679** **JTF579.17**	**163721663** **JTR479.45**	**163718410** **JTC530Z3-118RL**		**JTK003570**
YZF R1	1000	2009	2014	**163720679** **JTF579.17**	**163721174** **JTR1479.47**	**163718411** **JTC530Z3-120RL**		**JTK003610**
YZF R1	1000	2015	2017	**163720217** **JTF1591.16**	**163721308** **JTR1877.41**	**163718341** **JTC525Z3-114RL**		**JTK002250**
YZF R1 M	1000	2015	2017	**163720217** **JTF1591.16**	**163721308** **JTR1877.41**	**163718341** **JTC525Z3-114RL**		**JTK002250**
YZF R1 World GP 50th Anniversary Edition	1000	2012	2012	**163720679** **JTF579.17**	**163721174** **JTR1479.47**	**163718411** **JTC530Z3-120RL**		**JTK003610**
XJR1300	1300	1998	2002	**163720679** **JTF579.17**	**163722154** **JTR859.38**	**163718406** **JTC530Z3-110RL**		**JTK003050**
XJR1300	1300	2002	2003	**163720680** **JTF579.18**	**163722155** **JTR859.39**	**163718407** **JTC530Z3-112RL**		**JTK004750**
XJR1300	1300	2004	2006	**163720680** **JTF579.18**	**163721658** **JTR479.39**	**163718407** **JTC530Z3-112RL**		**JTK004760**
XJR1300	1300	2007	2015	**163720679** **JTF579.17**	**163721657** **JTR479.38**	**163718406** **JTC530Z3-110RL**		**JTK003060**
XJR1300 C Racer	1300	2015	2017	**163720679** **JTF579.17**	**163721657** **JTR479.38**	**163718406** **JTC530Z3-110RL**		**JTK003060**
XJR1300 SP	1300	1999	2001	**163720679** **JTF579.17**	**163722154** **JTR859.38**	**163718406** **JTC530Z3-110RL**		**JTK003050**
MT-01	1670	2005	2011	**163720679** **JTF579.17**	**163721658** **JTR479.39**	**163718408** **JTC530Z3-114RL**		**JTK003290**

La composizione del kit indicata in tabella è quella consigliata dalla casa produttrice. Per eventuali variazioni personalizzate delle misure dei singoli componenti non viene garantita alcuna applicabilità specifica.
I codici dei kit JTPROxxxx seguono la codifica dei Kit standard JTKxxxxxx. Esempio: il kit JTPRO1910 è utilizzabile per le stesse applicazioni del kit JTK001910 ma include il pignone gommato (RB), la corona zincata nera (ZBK) e la catena nichelata.
The kit composition indicated in the table is the one recommended by the manufacturer. For any customized changings of the measures of the individual components, no specific applicability is guaranteed.
The JTPROxxxx kit codes follow the coding of the JTKxxxxxx standard kits . Example: the JTPRO1910 kit can be used for the same applications as the JTK001910 kit but includes the rubber cushioned front sprocket, the black zinc finish rear sprocket and the nickel-plated chain.

RICERCA PER CODICE JT - *RESEARCH BY JT CODE*

Codice JT *JT Code*	Casa *Mark*	Modello *Model*	CC	Da *From*	A *To*	Pignone Codice RMS - JT *Front Sprocket* *RMS - JT Code*	Corona Codice RMS - JT *Rear Sprocket* *RMS - JT Code*	Catena Codice RMS - JT *Chain* *RMS - JT Code*	Carrier Codice RMS - JT *RMS - JT Code*
JTK000010	APRILIA	RS	50	1999	2005	**163720009** **JTF1120.12**	**163721406** **JTR23.47**	**163718033** **JTC420HDR122SL**	
JTK000020	APRILIA	Tuono	50	2003	2005	**163720008** **JTF1120.11**	**163721406** **JTR23.47**	**163718034** **JTC420HDR124SL**	
JTK000030	YAMAHA	DT50 SM Supermotard	50	2003	2006	**163720008** **JTF1120.11**	**163721023** **JTR1131.48**	**163718035** **JTC420HDR126SL**	
JTK000040	YAMAHA	DT50 R	50	2003	2006	**163720008** **JTF1120.11**	**163721024** **JTR1131.50**	**163718035** **JTC420HDR126SL**	
JTK000050	APRILIA	MX SM	50	2003	2006	**163720008** **JTF1120.11**	**163721445** **JTR24.51**	**163718035** **JTC420HDR126SL**	
JTK000060	APRILIA	RX	50	1998	2005	**163720009** **JTF1120.12**	**163721445** **JTR24.51**	**163718035** **JTC420HDR126SL**	
JTK000070	DERBI	Senda R DRD Racing	50	2006	2013	**163720021** **JTF1128.11**	**163721032** **JTR1132.53**	**163718037** **JTC420HDR130SL**	
	DERBI	Senda SM DRD Racing	50	2006	2010	**163720021** **JTF1128.11**	**163721032** **JTR1132.53**	**163718037** **JTC420HDR130SL**	
JTK000080	DERBI	Senda R DRD X-treme	50	2011	2014	**163720021** **JTF1128.11**	**163721026** **JTR1131.53**	**163718037** **JTC420HDR130SL**	
	DERBI	Senda R X-Race	50	2006	2011	**163720021** **JTF1128.11**	**163721026** **JTR1131.53**	**163718037** **JTC420HDR130SL**	
	DERBI	Senda R X-treme	50	2006	2016	**163720021** **JTF1128.11**	**163721026** **JTR1131.53**	**163718037** **JTC420HDR130SL**	
	DERBI	Senda SM X-race	50	2006	2011	**163720021** **JTF1128.11**	**163721026** **JTR1131.53**	**163718037** **JTC420HDR130SL**	
	DERBI	Senda SM X-treme	50	2006	2016	**163720021** **JTF1128.11**	**163721026** **JTR1131.53**	**163718037** **JTC420HDR130SL**	
JTK000090	DERBI	Senda SM DRD Evo	50	2009	2010	**163720021** **JTF1128.11**	**163721034** **JTR1133.53**	**163718037** **JTC420HDR130SL**	
	DERBI	Senda SM DRD Evo Ltd. Ed.	50	2010	2010	**163720021** **JTF1128.11**	**163721034** **JTR1133.53**	**163718037** **JTC420HDR130SL**	
	DERBI	Senda SM DRD Racing	50	2011	2016	**163720021** **JTF1128.11**	**163721034** **JTR1133.53**	**163718037** **JTC420HDR130SL**	
	DERBI	Senda SM DRD Racing Limited	50	2007	2007	**163720021** **JTF1128.11**	**163721034** **JTR1133.53**	**163718037** **JTC420HDR130SL**	
JTK000100	YAMAHA	TZR50 X-Power	50	1996	2006	**163720009** **JTF1120.12**	**163721017** **JTR1078.47**	**163718037** **JTC420HDR130SL**	
JTK000110	DERBI	R-DRD Black Devil	50	2004	2005	**163720018** **JTF1127.13**	**163721026** **JTR1131.53**	**163718037** **JTC420HDR130SL**	
	DERBI	Senda R DRD X-treme	50	2004	2005	**163720018** **JTF1127.13**	**163721026** **JTR1131.53**	**163718037** **JTC420HDR130SL**	
	DERBI	Senda R X-treme	50	2002	2005	**163720018** **JTF1127.13**	**163721026** **JTR1131.53**	**163718037** **JTC420HDR130SL**	
JTK000120	DERBI	Senda SM X-race	50	2004	2005	**163720019** **JTF1127.14**	**163721026** **JTR1131.53**	**163718037** **JTC420HDR130SL**	
	DERBI	Senda SM X-treme	50	2000	2005	**163720019** **JTF1127.14**	**163721026** **JTR1131.53**	**163718037** **JTC420HDR130SL**	
JTK000130	DERBI	Senda SM DRD	50	2002	2005	**163720019** **JTF1127.14**	**163721032** **JTR1132.53**	**163718037** **JTC420HDR130SL**	
JTK000140	APRILIA	RS	50	2006	2009	**163720021** **JTF1128.11**	**163721034** **JTR1133.53**	**163718038** **JTC420HDR132SL**	
	APRILIA	RS	50	2010	2013	**163720021** **JTF1128.11**	**163721034** **JTR1133.53**	**163718038** **JTC420HDR132SL**	
	APRILIA	RS4	50	2012	2016	**163720021** **JTF1128.11**	**163721034** **JTR1133.53**	**163718038** **JTC420HDR132SL**	
	APRILIA	RS4 Replica	50	2012	2016	**163720021** **JTF1128.11**	**163721034** **JTR1133.53**	**163718038** **JTC420HDR132SL**	
	APRILIA	SX	50	2012	2016	**163720021** **JTF1128.11**	**163721034** **JTR1133.53**	**163718038** **JTC420HDR132SL**	
	DERBI	GPR Nude	50	2006	2013	**163720021** **JTF1128.11**	**163721034** **JTR1133.53**	**163718038** **JTC420HDR132SL**	
	DERBI	GPR Racing	50	2006	2013	**163720021** **JTF1128.11**	**163721034** **JTR1133.53**	**163718038** **JTC420HDR132SL**	

Codice JT *JT Code*	Casa *Mark*	Modello *Model*	CC	Da *From*	A *To*	Pignone Codice RMS - JT *Front Sprocket* *RMS - JT Code*	Corona Codice RMS - JT *Rear Sprocket* *RMS - JT Code*	Catena Codice RMS - JT *Chain* *RMS - JT Code*	Carrier Codice RMS - JT *RMS - JT Code*
JTK000150	APRILIA	RX	50	2006	2016	**163720021** **JTF1128.11**	**163721026** **JTR1131.53**	**163718038** **JTC420HDR132SL**	
	APRILIA	SX	50	2006	2011	**163720021** **JTF1128.11**	**163721026** **JTR1131.53**	**163718038** **JTC420HDR132SL**	
JTK000160	DERBI	Senda R DRD Pro	50	2006	2013	**163720021** **JTF1128.11**	**163721032** **JTR1132.53**	**163718038** **JTC420HDR132SL**	
	DERBI	Senda SM DRD Pro	50	2006	2012	**163720021** **JTF1128.11**	**163721032** **JTR1132.53**	**163718038** **JTC420HDR132SL**	
JTK000170	YAMAHA	TZR50 RR	50	1997	2006	**163720009** **JTF1120.12**	**163721017** **JTR1078.47**	**163718038** **JTC420HDR132SL**	
JTK000180	DERBI	Senda R	50	2000	2002	**163720018** **JTF1127.13**	**163721026** **JTR1131.53**	**163718039** **JTC420HDR134SL**	
JTK000190	DERBI	Senda R DRD	50	2002	2005	**163720018** **JTF1127.13**	**163721032** **JTR1132.53**	**163718041** **JTC420HDR140SL**	
JTK000200	YAMAHA	YBR125 Custom	125	2008	2014	**163720599** **JTF548.14**	**163722074** **JTR838.43**	**163718068** **JTC428HDR118SL**	
JTK000210	YAMAHA	YBR125	125	2007	2014	**163720599** **JTF548.14**	**163722075** **JTR838.45**	**163718068** **JTC428HDR118SL**	
JTK000220	HONDA	CBF125	125	2009	2014	**163720049** **JTF1264.16**	**163721061** **JTR1219.42**	**163718068** **JTC428HDR118SL**	
JTK000230	HONDA	CBR125 R	125	2004	2010	**163720048** **JTF1264.15**	**163721047** **JTR1206.42**	**163718071** **JTC428HDR124SL**	
JTK000240	YAMAHA	XT125 X	125	2008	2011	**163720599** **JTF548.14**	**163721036** **JTR1134.48**	**163718072** **JTC428HDR126SL**	
JTK000250	YAMAHA	XT125 R	125	2008	2011	**163720599** **JTF548.14**	**163721037** **JTR1134.50**	**163718073** **JTC428HDR128SL**	
JTK000260	HONDA	CBR125 R	125	2011	2017	**163720048** **JTF1264.15**	**163721065** **JTR1221.44**	**163718073** **JTC428HDR128SL**	
JTK000270	YAMAHA	MT125 (ABS)	125	2015	2015	**163720180** **JTF1550.14**	**163721278** **JTR1844.48**	**163718075** **JTC428HDR132SL**	
	YAMAHA	YZF-R125	125	2008	2018	**163720180** **JTF1550.14**	**163721278** **JTR1844.48**	**163718075** **JTC428HDR132SL**	
	YAMAHA	YZF-R125 50th Anniversary Edition	125	2012	2012	**163720180** **JTF1550.14**	**163721278** **JTR1844.48**	**163718075** **JTC428HDR132SL**	
JTK000280	YAMAHA	WR125 R	125	2009	2015	**163720180** **JTF1550.14**	**163722079** **JTR839.53**	**163718076** **JTC428HDR134SL**	
	YAMAHA	WR125 X	125	2009	2015	**163720180** **JTF1550.14**	**163722079** **JTR839.53**	**163718076** **JTC428HDR134SL**	
JTK000290	DERBI	Baja SM	125	2006	2008	**163720275** **JTF259.15**	**163721036** **JTR1134.48**	**163718076** **JTC428HDR134SL**	
JTK000300	SUZUKI	RV125 Van Van	125	2007	2015	**163720468** **JTF425.15**	**163721225** **JTR1796.49**	**163718076** **JTC428HDR134SL**	
JTK000310	DERBI	Cross City	125	2007	2013	**163720275** **JTF259.15**	**163721037** **JTR1134.50**	**163718076** **JTC428HDR134SL**	
JTK000320	SUZUKI	RV125 Van Van	125	2003	2006	**163720468** **JTF425.15**	**163721226** **JTR1796.51**	**163718076** **JTC428HDR134SL**	
JTK000330	DUCATI	900 Super Light	900	1992	1998	**163720719** **JTF736.15**	**163721809** **JTR735.37**	**163718268** **JTC520Z3-096RL**	
JTK000340	DUCATI	750 SS	750	1999	2002	**163720718** **JTF736.14**	**163721812** **JTR735.40**	**163718269** **JTC520Z3-098RL**	
JTK000350	DUCATI	750 SS	750	1991	1998	**163720719** **JTF736.15**	**163721809** **JTR735.37**	**163718269** **JTC520Z3-098RL**	
JTK000360	DUCATI	900 MH900 e	900	2002	2002	**163720719** **JTF736.15**	**163721810** **JTR735.38**	**163718269** **JTC520Z3-098RL**	
	DUCATI	900 Monster	900	1999	1999	**163720719** **JTF736.15**	**163721810** **JTR735.38**	**163718269** **JTC520Z3-098RL**	
JTK000370	DUCATI	800 Sport	800	2003	2003	**163720719** **JTF736.15**	**163721811** **JTR735.39**	**163718269** **JTC520Z3-098RL**	
	DUCATI	800 SS	800	2003	2007	**163720719** **JTF736.15**	**163721811** **JTR735.39**	**163718269** **JTC520Z3-098RL**	
	DUCATI	900 Monster	900	1994	1998	**163720719** **JTF736.15**	**163721811** **JTR735.39**	**163718269** **JTC520Z3-098RL**	
	DUCATI	900 Monster i.e.	900	2000	2001	**163720719** **JTF736.15**	**163721811** **JTR735.39**	**163718269** **JTC520Z3-098RL**	
JTK000380	DUCATI	900 SS	900	1998	2002	**163720719** **JTF736.15**	**163721812** **JTR735.40**	**163718269** **JTC520Z3-098RL**	

Codice JT *JT Code*	**Casa** *Mark*	**Modello** *Model*	**CC**	**Da** *From*	**A** *To*	**Pignone Codice RMS - JT** *Front Sprocket RMS - JT Code*	**Corona Codice RMS - JT** *Rear Sprocket RMS - JT Code*	**Catena Codice RMS - JT** *Chain RMS - JT Code*	**Carrier Codice RMS - JT** *RMS - JT Code*
JTK000390	DUCATI	600 SS	600	1995	1999	**163720719 JTF736.15**	**163721813 JTR735.41**	**163718269 JTC520Z3-098RL**	
JTK000400	DUCATI	600 Monster	600	1995	1998	**163720718 JTF736.14**	**163721815 JTR735.43**	**163718270 JTC520Z3-100RL**	
JTK000410	DUCATI	900 Monster i.e.	900	2002	2002	**163720719 JTF736.15**	**163721810 JTR735.38**	**163718270 JTC520Z3-100RL**	
JTK000420	DUCATI	750 Monster	750	1998	2001	**163720719 JTF736.15**	**163721813 JTR735.41**	**163718270 JTC520Z3-100RL**	
JTK000430	DUCATI	620 Sport	620	2003	2003	**163720719 JTF736.15**	**163721816 JTR735.44**	**163718270 JTC520Z3-100RL**	
JTK000440	YAMAHA	XT600 K	600	1991	1994	**163720670 JTF577.15**	**163722145 JTR857.39**	**163718249 JTC520X1R2-102DL**	
JTK000450	DUCATI	750 Monster i.e.	750	2002	2002	**163720719 JTF736.15**	**163721813 JTR735.41**	**163718271 JTC520Z3-102RL**	
	DUCATI	750 Monster i.e. Dark	750	2002	2002	**163720719 JTF736.15**	**163721813 JTR735.41**	**163718271 JTC520Z3-102RL**	
JTK000460	DUCATI	800 Monster Dark	800	2003	2003	**163720719 JTF736.15**	**163721814 JTR735.42**	**163718271 JTC520Z3-102RL**	
	DUCATI	800 Monster i.e.	800	2003	2004	**163720719 JTF736.15**	**163721814 JTR735.42**	**163718271 JTC520Z3-102RL**	
JTK000470	DUCATI	600 Monster	600	1999	2001	**163720719 JTF736.15**	**163721818 JTR735.46**	**163718271 JTC520Z3-102RL**	
JTK000480	APRILIA	Tuono	125	2003	2007	**163720408 JTF394.14**	**163721785 JTR701.40**	**163718133 JTC520HDR104SL**	
JTK000490	YAMAHA	XT600 H	600	1987	1989	**163720670 JTF577.15**	**163722145 JTR857.39**	**163718250 JTC520X1R2-104DL**	
JTK000500	DUCATI	800 Monster S2R	800	2005	2007	**163720719 JTF736.15**	**163721829 JTR751.42**	**163718272 JTC520Z3-104RL**	**163722217 JTA750B**
	DUCATI	800 Monster S2R Dark	800	2006	2006	**163720719 JTF736.15**	**163721829 JTR751.42**	**163718272 JTC520Z3-104RL**	**163722217 JTA750B**
JTK000510	KAWASAKI	EX500 Ninja 500R	500	2006	2009	**163720548 JTF512.16**	**163721677 JTR486.41**	**163718250 JTC520X1R2-104DL**	
	KAWASAKI	GPZ500 S	500	1994	2005	**163720548 JTF512.16**	**163721677 JTR486.41**	**163718250 JTC520X1R2-104DL**	
JTK000520	KAWASAKI	EX300 Ninja 300	300	2013	2017	**163720177 JTF1539.14**	**163721678 JTR486.42**	**163718251 JTC520X1R2-106DL**	
	KAWASAKI	EX300 Ninja 300 ABS KRT Edition	300	2016	2017	**163720177 JTF1539.14**	**163721678 JTR486.42**	**163718251 JTC520X1R2-106DL**	
	KAWASAKI	EX300 Ninja 300 ABS SE	300	2013	2017	**163720177 JTF1539.14**	**163721678 JTR486.42**	**163718251 JTC520X1R2-106DL**	
	KAWASAKI	EX300 Ninja 300 ABS Winter Test Edition	300	2016	2017	**163720177 JTF1539.14**	**163721678 JTR486.42**	**163718251 JTC520X1R2-106DL**	
	KAWASAKI	EX300 Ninja 300 SE	300	2014	2016	**163720177 JTF1539.14**	**163721678 JTR486.42**	**163718251 JTC520X1R2-106DL**	
	KAWASAKI	Z300	300	2015	2017	**163720177 JTF1539.14**	**163721678 JTR486.42**	**163718251 JTC520X1R2-106DL**	
JTK000530	KAWASAKI	EX250R Ninja 250 R	250	2008	2012	**163720177 JTF1539.14**	**163721679 JTR486.43**	**163718251 JTC520X1R2-106DL**	
	KAWASAKI	EX250R Ninja 250 R Special Edition	250	2012	2012	**163720177 JTF1539.14**	**163721679 JTR486.43**	**163718251 JTC520X1R2-106DL**	
JTK000540	KAWASAKI	GPX250 R	250	1988	2005	**163720558 JTF516.14**	**163721681 JTR486.45**	**163718134 JTC520HDR106SL**	
JTK000560	KAWASAKI	KLR650 (KL650)	650	1990	2017	**163720543 JTF511.15**	**163721685 JTR487.43**	**163718273 JTC520Z3-106RL**	
JTK000570	YAMAHA	XT600 E	600	1989	1998	**163720670 JTF577.15**	**163722150 JTR857.45**	**163718251 JTC520X1R2-106DL**	
	YAMAHA	XT600 Z Tenere	600	1989	1994	**163720670 JTF577.15**	**163722150 JTR857.45**	**163718251 JTC520X1R2-106DL**	
JTK000580	YAMAHA	XT600 E	600	1999	2003	**163720197 JTF1577.15**	**163722150 JTR857.45**	**163718251 JTC520X1R2-106DL**	
JTK000590	DUCATI	620 Monster Dark	620	2003	2003	**163720719 JTF736.15**	**163721818 JTR735.46**	**163718273 JTC520Z3-106RL**	
	DUCATI	620 Monster Dark MD Monodisco	620	2004	2004	**163720719 JTF736.15**	**163721818 JTR735.46**	**163718273 JTC520Z3-106RL**	
	DUCATI	620 Monster i.e.	620	2002	2003	**163720719 JTF736.15**	**163721818 JTR735.46**	**163718273 JTC520Z3-106RL**	

Codice JT *JT Code*	Casa *Mark*	Modello *Model*	CC	Da *From*	A *To*	Pignone Codice RMS - JT *Front Sprocket* *RMS - JT Code*	Corona Codice RMS - JT *Rear Sprocket* *RMS - JT Code*	Catena Codice RMS - JT *Chain* *RMS - JT Code*	Carrier Codice RMS - JT *RMS - JT Code*
	DUCATI	620 S Monster i.e.	620	2002	2003	163720719 JTF736.15	163721818 JTR735.46	163718273 JTC520Z3-106RL	
JTK000600	DUCATI	620 Monster Dark	620	2004	2006	163720719 JTF736.15	163721819 JTR735.48	163718273 JTC520Z3-106RL	
	DUCATI	620 Monster i.e.	620	2004	2006	163720719 JTF736.15	163721819 JTR735.48	163718273 JTC520Z3-106RL	
	DUCATI	620 S Monster i.e.	620	2004	2006	163720719 JTF736.15	163721819 JTR735.48	163718273 JTC520Z3-106RL	
JTK000610	KAWASAKI	GPZ400	400	1984	1997	163720548 JTF512.16	163721172 JTR1478.42	163718251 JTC520X1R2-106DL	
JTK000620	APRILIA	RS Extrema	125	2004	2005	163720411 JTF394.17	163721785 JTR701.40	163718251 JTC520X1R2-106DL	
JTK000630	KAWASAKI	ER500 (ER-5)	500	1997	2006	163720549 JTF512.17	163721678 JTR486.42	163718251 JTC520X1R2-106DL	
JTK000640	APRILIA	RS Replica	125	1993	2003	163720408 JTF394.14	163721784 JTR701.39	163718252 JTC520X1R2-108DL	
JTK000650	HONDA	FX650 Vigor	650	1999	2001	163720356 JTF308.14	163721429 JTR245/3.43	163718274 JTC520Z3-108RL	
JTK000660	KAWASAKI	ZX-6RR (ZX600) Ninja	600	2003	2004	163720065 JTF1307.15	163721171 JTR1478.40	163718274 JTC520Z3-108RL	
	KAWASAKI	ZX-6R (ZX636) Ninja	636	2003	2004	163720065 JTF1307.15	163721171 JTR1478.40	163718274 JTC520Z3-108RL	
JTK000670	DUCATI	696 Monster	695	2008	2014	163720719 JTF736.15	163721817 JTR735.45	163718274 JTC520Z3-108RL	
JTK000680	DUCATI	620 Multistrada	620	2005	2006	163720719 JTF736.15	163721819 JTR735.48	163718274 JTC520Z3-108RL	
	DUCATI	620 Multistrada Dark	620	2005	2006	163720719 JTF736.15	163721819 JTR735.48	163718274 JTC520Z3-108RL	
JTK000690	KAWASAKI	KLE500	500	1991	1996	163720548 JTF512.16	163721686 JTR487.44	163718252 JTC520X1R2-108DL	
JTK000700	YAMAHA	XJ600 N	600	1998	2000	163720684 JTF582.16	163722139 JTR855.46	163718252 JTC520X1R2-108DL	
JTK000710	APRILIA	Moto 6.5	650	1995	1999	163720016 JTF1126.16	163721754 JTR5.49	163718274 JTC520Z3-108RL	
JTK000730	HONDA	FMX650	650	2005	2008	163720356 JTF308.14	163721428 JTR245/3.42	163718275 JTC520Z3-110RL	
JTK000740	APRILIA	RS	250	1995	2004	163720515 JTF436.14	163721554 JTR28.42	163718253 JTC520X1R2-110DL	
JTK000750	KAWASAKI	KLX250 R	250	1993	1999	163720651 JTF569.14	163721601 JTR460.50	163718253 JTC520X1R2-110DL	
	KAWASAKI	KLX300 (KLX300R)	300	1997	2002	163720651 JTF569.14	163721601 JTR460.50	163718253 JTC520X1R2-110DL	
JTK000760	KAWASAKI	ZX-6RR (ZX600) Ninja	600	2005	2006	163720065 JTF1307.15	163721654 JTR478.43	163718275 JTC520Z3-110RL	
	KAWASAKI	ZX-6R (ZX636) Ninja	636	2005	2006	163720065 JTF1307.15	163721654 JTR478.43	163718275 JTC520Z3-110RL	
JTK000770	APRILIA	Pegaso Factory	650	2007	2009	163720357 JTF308.15	163721750 JTR5.44	163718275 JTC520Z3-110RL	
JTK000780	APRILIA	Pegaso Strada	650	2005	2009	163720357 JTF308.15	163721797 JTR703.44	163718275 JTC520Z3-110RL	
	APRILIA	Pegaso Trail	650	2007	2009	163720357 JTF308.15	163721797 JTR703.44	163718275 JTC520Z3-110RL	
JTK000790	KAWASAKI	ZXR400 (ZX-4)	400	1988	2002	163720547 JTF512.15	163721655 JTR478.45	163718253 JTC520X1R2-110DL	
JTK000800	YAMAHA	XT660 R	660	2004	2015	163720357 JTF308.15	163722138 JTR855.45	163718275 JTC520Z3-110RL	
	YAMAHA	XT660 X Super Motard	660	2004	2015	163720357 JTF308.15	163722138 JTR855.45	163718275 JTC520Z3-110RL	
	YAMAHA	XTZ660 Z Tenere	660	2008	2015	163720357 JTF308.15	163722138 JTR855.45	163718275 JTC520Z3-110RL	
	YAMAHA	XTZ660 Z Tenere ABS	660	2011	2015	163720357 JTF308.15	163722138 JTR855.45	163718275 JTC520Z3-110RL	
JTK000810	YAMAHA	XTZ660 Tenere	660	1991	1995	163720670 JTF577.15	163722150 JTR857.45	163718275 JTC520Z3-110RL	
JTK000830	YAMAHA	XTZ660 Tenere	660	1996	1998	163720670 JTF577.15	163722151 JTR857.46	163718275 JTC520Z3-110RL	

Codice JT *JT Code*	**Casa** *Mark*	**Modello** *Model*	**CC**	**Da** *From*	**A** *To*	**Pignone Codice RMS - JT** *Front Sprocket RMS - JT Code*	**Corona Codice RMS - JT** *Rear Sprocket RMS - JT Code*	**Catena Codice RMS - JT** *Chain RMS - JT Code*	**Carrier Codice RMS - JT** *RMS - JT Code*
JTK000840	KAWASAKI	EN500 Vulcan	500	1996	2005	**163720548 JTF512.16**	**163721188 JTR1490.42**	**163718253 JTC520X1R2-110DL**	
	KAWASAKI	EN500 Vulcan 500 Ltd	500	2006	2009	**163720548 JTF512.16**	**163721188 JTR1490.42**	**163718253 JTC520X1R2-110DL**	
JTK000850	YAMAHA	XJ600 S Diversion	600	1999	2000	**163720684 JTF582.16**	**163722139 JTR855.46**	**163718253 JTC520X1R2-110DL**	
JTK000860	APRILIA	Pegaso Tuscany Tibet	650	2004	2004	**163720415 JTF402.16**	**163721752 JTR5.46**	**163718275 JTC520Z3-110RL**	
JTK000870	APRILIA	Pegaso	650	1992	1997	**163720016 JTF1126.16**	**163721753 JTR5.47**	**163718275 JTC520Z3-110RL**	
JTK000880	APRILIA	Pegaso	650	1998	1999	**163720415 JTF402.16**	**163721753 JTR5.47**	**163718275 JTC520Z3-110RL**	
	APRILIA	Pegaso Cube	650	2000	2000	**163720415 JTF402.16**	**163721753 JTR5.47**	**163718275 JTC520Z3-110RL**	
	APRILIA	Pegaso i.e.	650	2001	2004	**163720415 JTF402.16**	**163721753 JTR5.47**	**163718275 JTC520Z3-110RL**	
	BMW	F650	650	1994	1995	**163720415 JTF402.16**	**163721753 JTR5.47**	**163718275 JTC520Z3-110RL**	
	BMW	F650 Funduro	650	1996	2000	**163720415 JTF402.16**	**163721753 JTR5.47**	**163718275 JTC520Z3-110RL**	
	BMW	F650 ST Strada	650	1998	2000	**163720415 JTF402.16**	**163721753 JTR5.47**	**163718275 JTC520Z3-110RL**	
JTK000890	YAMAHA	XJ600 N	600	1995	2003	**163720684 JTF582.16**	**163722141 JTR855.48**	**163718253 JTC520X1R2-110DL**	
	YAMAHA	XJ600 S Diversion	600	1992	2003	**163720684 JTF582.16**	**163722141 JTR855.48**	**163718253 JTC520X1R2-110DL**	
JTK000900	APRILIA	RS	125	2006	2012	**163720411 JTF394.17**	**163721796 JTR703.40**	**163718253 JTC520X1R2-110DL**	
JTK000910	KAWASAKI	KLE500	500	2006	2007	**163720549 JTF512.17**	**163721686 JTR487.44**	**163718253 JTC520X1R2-110DL**	
JTK000920	KAWASAKI	KLE500	500	1997	2005	**163720549 JTF512.17**	**163721688 JTR487.46**	**163718253 JTC520X1R2-110DL**	
JTK000930	KAWASAKI	KLX300 (KLX300R)	300	2003	2007	**163720631 JTF565.14SC**	**163721601 JTR460.50**	**163718253 JTC520X1R2-110DL**	
JTK000940	HONDA	CB500 F	500	2013	2018	**163720111 JTF1381.15**	**163721104 JTR1316.41**	**163718254 JTC520X1R2-112DL**	
	HONDA	CB500 X/XA	500	2013	2018	**163720111 JTF1381.15**	**163721104 JTR1316.41**	**163718254 JTC520X1R2-112DL**	
JTK000950	KAWASAKI	Z750 (ZR750)	750	2004	2012	**163720176 JTF1538.15**	**163721654 JTR478.43**	**163718276 JTC520Z3-112RL**	
	KAWASAKI	Z750 (ZR750) ABS	750	2007	2012	**163720176 JTF1538.15**	**163721654 JTR478.43**	**163718276 JTC520Z3-112RL**	
	KAWASAKI	Z750 R (ZR750)	750	2011	2012	**163720176 JTF1538.15**	**163721654 JTR478.43**	**163718276 JTC520Z3-112RL**	
	KAWASAKI	Z750 R (ZR750) ABS	750	2011	2012	**163720176 JTF1538.15**	**163721654 JTR478.43**	**163718276 JTC520Z3-112RL**	
	KAWASAKI	Z750 R (ZR750) Black Edition	750	2012	2012	**163720176 JTF1538.15**	**163721654 JTR478.43**	**163718276 JTC520Z3-112RL**	
	KAWASAKI	Z750 S (ZR750 S)	750	2005	2006	**163720176 JTF1538.15**	**163721654 JTR478.43**	**163718276 JTC520Z3-112RL**	
JTK000960	APRILIA	SX	125	2008	2012	**163720409 JTF394.15**	**163721393 JTR22.45**	**163718254 JTC520X1R2-112DL**	
JTK000970	SUZUKI	SV650	650	2016	2018	**163720632 JTF565.15**	**163721992 JTR823.46**	**163718276 JTC520Z3-112RL**	
	SUZUKI	SV650 A ABS	650	2016	2018	**163720632 JTF565.15**	**163721992 JTR823.46**	**163718276 JTC520Z3-112RL**	
JTK000980	YAMAHA	MT-03	660	2006	2012	**163720357 JTF308.15**	**163722140 JTR855.47**	**163718276 JTC520Z3-112RL**	
JTK000990	APRILIA	RX	125	2008	2012	**163720409 JTF394.15**	**163721394 JTR22.49**	**163718254 JTC520X1R2-112DL**	
JTK001000	HONDA	NC700 D Integra	700	2012	2013	**163720109 JTF1373.16**	**163722437 JTR1303.39ZBK**	**163718276 JTC520Z3-112RL**	
JTK001010	KAWASAKI	ZX-6R (ZX600) Ninja	600	2007	2015	**163720167 JTF1536.16**	**163721654 JTR478.43**	**163718276 JTC520Z3-112RL**	
	KAWASAKI	ZX-6R (ZX600) Ninja Performance	600	2011	2012	**163720167 JTF1536.16**	**163721654 JTR478.43**	**163718276 JTC520Z3-112RL**	

Codice JT *JT Code*	Casa *Mark*	Modello *Model*	CC	Da *From*	A *To*	Pignone Codice RMS - JT *Front Sprocket* *RMS - JT Code*	Corona Codice RMS - JT *Rear Sprocket* *RMS - JT Code*	Catena Codice RMS - JT *Chain* *RMS - JT Code*	Carrier Codice RMS - JT *RMS - JT Code*
	KAWASAKI	ZX-6R (ZX636) Ninja	636	2013	2017	**163720167** **JTF1536.16**	**163721654** **JTR478.43**	**163718276** **JTC520Z3-112RL**	
	KAWASAKI	ZX-6R (ZX636) Ninja ABS	636	2013	2017	**163720167** **JTF1536.16**	**163721654** **JTR478.43**	**163718276** **JTC520Z3-112RL**	
	KAWASAKI	ZX-6R (ZX636) Ninja KRT Edition	636	2016	2017	**163720167** **JTF1536.16**	**163721654** **JTR478.43**	**163718276** **JTC520Z3-112RL**	
JTK001020	APRILIA	MX	125	2004	2007	**163720410** **JTF394.16**	**163721393** **JTR22.45**	**163718137** **JTC520HDR112SL**	
JTK001030	YAMAHA	XTZ750 Super Tenere	750	1990	1998	**163720674** **JTF578.16**	**163722139** **JTR855.46**	**163718276** **JTC520Z3-112RL**	
JTK001040	BMW	F650 Dakar	650	1999	2000	**163720415** **JTF402.16**	**163721753** **JTR5.47**	**163718276** **JTC520Z3-112RL**	
	BMW	F650 GS	650	1999	2015	**163720415** **JTF402.16**	**163721753** **JTR5.47**	**163718276** **JTC520Z3-112RL**	
	BMW	F650 GS Dakar	650	2001	2005	**163720415** **JTF402.16**	**163721753** **JTR5.47**	**163718276** **JTC520Z3-112RL**	
	BMW	G650 GS Sertao	650	2012	2013	**163720415** **JTF402.16**	**163721753** **JTR5.47**	**163718276** **JTC520Z3-112RL**	
JTK001050	BMW	650 Xchallenge	650	2007	2008	**163720415** **JTF402.16**	**163722216** **JTR9.47**	**163718276** **JTC520Z3-112RL**	
	BMW	650 Xcountry	650	2007	2008	**163720415** **JTF402.16**	**163722216** **JTR9.47**	**163718276** **JTC520Z3-112RL**	
JTK001060	BMW	650 Xmoto	650	2007	2008	**163720415** **JTF402.16**	**163721798** **JTR703.47**	**163718276** **JTC520Z3-112RL**	
JTK001070	YAMAHA	YZF-R3	300	2015	2018	**163720631** **JTF565.14SC**	**163721679** **JTR486.43**	**163718254** **JTC520X1R2-112DL**	
JTK001080	SUZUKI	DR-Z250	250	2001	2007	**163720502** **JTF432.13SC**	**163721909** **JTR808.49**	**163718254** **JTC520X1R2-112DL**	
JTK001090	APRILIA	RX	125	2000	2000	**163720408** **JTF394.14**	**163721394** **JTR22.49**	**163718255** **JTC520X1R2-114DL**	
JTK001100	KAWASAKI	Z800 (ZR800)	800	2013	2016	**163720176** **JTF1538.15**	**163721655** **JTR478.45**	**163718277** **JTC520Z3-114RL**	
	KAWASAKI	Z800 Sugomi Edition (ZR800)	800	2016	2016	**163720176** **JTF1538.15**	**163721655** **JTR478.45**	**163718277** **JTC520Z3-114RL**	
	KAWASAKI	Z800e (ZR800)	800	2013	2016	**163720176** **JTF1538.15**	**163721655** **JTR478.45**	**163718277** **JTC520Z3-114RL**	
JTK001110	KAWASAKI	ER-6f (EX650)	650	2006	2016	**163720632** **JTF565.15**	**163721656** **JTR478.46**	**163718277** **JTC520Z3-114RL**	
	KAWASAKI	ER-6n (ER650)	650	2006	2016	**163720632** **JTF565.15**	**163721656** **JTR478.46**	**163718277** **JTC520Z3-114RL**	
	KAWASAKI	KLE650 Versys	650	2007	2018	**163720632** **JTF565.15**	**163721656** **JTR478.46**	**163718277** **JTC520Z3-114RL**	
	KAWASAKI	KLE650 Versys ABS	650	2007	2011	**163720632** **JTF565.15**	**163721656** **JTR478.46**	**163718277** **JTC520Z3-114RL**	
	KAWASAKI	KLE650 Versys City	650	2011	2011	**163720632** **JTF565.15**	**163721656** **JTR478.46**	**163718277** **JTC520Z3-114RL**	
	KAWASAKI	KLE650 Versys Tourer	650	2011	2011	**163720632** **JTF565.15**	**163721656** **JTR478.46**	**163718277** **JTC520Z3-114RL**	
JTK001120	BMW	G450 X	450	2008	2010	**163720419** **JTF403.15**	**163722211** **JTR8.48**	**163718255** **JTC520X1R2-114DL**	
JTK001150	YAMAHA	XV250 S Virago	250	1995	2008	**163720653** **JTF569.16**	**163722150** **JTR857.45**	**163718255** **JTC520X1R2-114DL**	
	YAMAHA	XV250 V-Star	250	2008	2017	**163720653** **JTF569.16**	**163722150** **JTR857.45**	**163718255** **JTC520X1R2-114DL**	
JTK001160	HONDA	750 Integra DCT	750	2014	2015	**163720110** **JTF1373.17**	**163721075** **JTR1303.43**	**163718277** **JTC520Z3-114RL**	
	HONDA	NC750 X	750	2014	2015	**163720110** **JTF1373.17**	**163721075** **JTR1303.43**	**163718277** **JTC520Z3-114RL**	
	HONDA	NC750 X DCT	750	2014	2015	**163720110** **JTF1373.17**	**163721075** **JTR1303.43**	**163718277** **JTC520Z3-114RL**	
JTK001170	KAWASAKI	KLX450 R	450	2008	2019	**163720193** **JTF1565.13SC**	**163721601** **JTR460.50**	**163718255** **JTC520X1R2-114DL**	
JTK001180	CAGIVA	Mito Euro 2	125	2004	2008	**163720706** **JTF711.14**	**163721788** **JTR701.43**	**163718139** **JTC520HDR116SL**	
	CAGIVA	Mito SP525	125	2008	2010	**163720706** **JTF711.14**	**163721788** **JTR701.43**	**163718139** **JTC520HDR116SL**	

Codice JT *JT Code*	**Casa** *Mark*	**Modello** *Model*	**CC**	**Da** *From*	**A** *To*	**Pignone Codice RMS - JT** *Front Sprocket RMS - JT Code*	**Corona Codice RMS - JT** *Rear Sprocket RMS - JT Code*	**Catena Codice RMS - JT** *Chain RMS - JT Code*	**Carrier Codice RMS - JT** *RMS - JT Code*
	CAGIVA	Raptor	125	2004	2010	**163720706 JTF711.14**	**163721788 JTR701.43**	**163718139 JTC520HDR116SL**	
JTK001190	SUZUKI	GW250 Inazuma	250	2012	2017	**163720745 JTF1447.14**	**163721992 JTR823.46**	**163718256 JTC520X1R2-116DL**	
JTK001200	KTM	690 SM	690	2007	2007	**163720235 JTF1902.15**	**163722193 JTR897.40**	**163718279 JTC520Z3-118RL**	
JTK001210	KTM	690 SM Ltd. Ed.	690	2010	2010	**163720236 JTF1902.16**	**163722193 JTR897.40**	**163718279 JTC520Z3-118RL**	
	KTM	690 SM R	690	2008	2009	**163720236 JTF1902.16**	**163722193 JTR897.40**	**163718279 JTC520Z3-118RL**	
JTK001220	KTM	690 SMC	690	2008	2011	**163720236 JTF1902.16**	**163722194 JTR897.42**	**163718279 JTC520Z3-118RL**	
	KTM	690 SMC R	690	2012	2015	**163720236 JTF1902.16**	**163722194 JTR897.42**	**163718279 JTC520Z3-118RL**	
JTK001230	YAMAHA	XJ6	600	2009	2015	**163720224 JTF1595.16**	**163722601 JTR305.46**	**163718257 JTC520X1R2-118DL**	
	YAMAHA	XJ6 ABS	600	2009	2015	**163720224 JTF1595.16**	**163722601 JTR305.46**	**163718257 JTC520X1R2-118DL**	
	YAMAHA	XJ6 Diversion	600	2009	2015	**163720224 JTF1595.16**	**163722601 JTR305.46**	**163718257 JTC520X1R2-118DL**	
	YAMAHA	XJ6 Diversion ABS	600	2009	2015	**163720224 JTF1595.16**	**163722601 JTR305.46**	**163718257 JTC520X1R2-118DL**	
	YAMAHA	XJ6 Diversion F ABS	600	2010	2015	**163720224 JTF1595.16**	**163722601 JTR305.46**	**163718257 JTC520X1R2-118DL**	
	YAMAHA	XJ6 SP	600	2013	2013	**163720224 JTF1595.16**	**163722601 JTR305.46**	**163718257 JTC520X1R2-118DL**	
JTK001240	KTM	690 SM	690	2008	2009	**163720237 JTF1902.17**	**163722193 JTR897.40**	**163718279 JTC520Z3-118RL**	
JTK001260	KTM	690 Enduro	690	2008	2010	**163720235 JTF1902.15**	**163722196 JTR897.45**	**163718280 JTC520Z3-120RL**	
	KTM	690 Enduro R	690	2008	2015	**163720235 JTF1902.15**	**163722196 JTR897.45**	**163718280 JTC520Z3-120RL**	
JTK001270	KAWASAKI	650 Vulcan-S ABS	650	2015	2015	**163720632 JTF565.15**	**163721656 JTR478.46**	**163718280 JTC520Z3-120RL**	
JTK001450	KTM	450 EXC Enduro Racing	450	2013	2015	**163720229 JTF1901.14SC**	**163722203 JTR897.52**	**163718258 JTC520X1R2-120DL**	
JTK001460	DUCATI	916 SPS Sport Production	916	1994	2000	**163720725 JTF740.15**	**163721830 JTR752.36**	**163718331 JTC525Z3-094RL**	**163722217 JTA750B**
	DUCATI	916 Strada Biposto	916	1994	2000	**163720725 JTF740.15**	**163721830 JTR752.36**	**163718331 JTC525Z3-094RL**	**163722217 JTA750B**
JTK001470	DUCATI	998	998	2002	2003	**163720728 JTF741.15**	**163721830 JTR752.36**	**163718331 JTC525Z3-094RL**	**163722217 JTA750B**
	DUCATI	998 S	998	2002	2002	**163720728 JTF741.15**	**163721830 JTR752.36**	**163718331 JTC525Z3-094RL**	**163722217 JTA750B**
JTK001480	DUCATI	1098	1098	2007	2008	**163720728 JTF741.15**	**163721834 JTR761.38**	**163718333 JTC525Z3-098RL**	**163722218 JTA760B**
	DUCATI	1098 R	1098	2008	2009	**163720728 JTF741.15**	**163721834 JTR761.38**	**163718333 JTC525Z3-098RL**	**163722218 JTA760B**
	DUCATI	1098 S	1098	2007	2008	**163720728 JTF741.15**	**163721834 JTR761.38**	**163718333 JTC525Z3-098RL**	**163722218 JTA760B**
	DUCATI	1198	1198	2009	2011	**163720728 JTF741.15**	**163721834 JTR761.38**	**163718333 JTC525Z3-098RL**	**163722218 JTA760B**
	DUCATI	1198 R Corse SE	1198	2010	2011	**163720728 JTF741.15**	**163721834 JTR761.38**	**163718333 JTC525Z3-098RL**	**163722218 JTA760B**
	DUCATI	1198 S	1198	2009	2010	**163720728 JTF741.15**	**163721834 JTR761.38**	**163718333 JTC525Z3-098RL**	**163722218 JTA760B**
	DUCATI	1198 S Corse SE	1198	2010	2010	**163720728 JTF741.15**	**163721834 JTR761.38**	**163718333 JTC525Z3-098RL**	**163722218 JTA760B**
	DUCATI	1198 SP	1198	2011	2011	**163720728 JTF741.15**	**163721834 JTR761.38**	**163718333 JTC525Z3-098RL**	**163722218 JTA760B**
JTK001490	DUCATI	848	848	2008	2010	**163720728 JTF741.15**	**163721831 JTR752.39**	**163718333 JTC525Z3-098RL**	**163722217 JTA750B**
	DUCATI	848 Evo	848	2011	2013	**163720728 JTF741.15**	**163721831 JTR752.39**	**163718333 JTC525Z3-098RL**	**163722217 JTA750B**
	DUCATI	848 Evo Corse Special Edition	848	2012	2013	**163720728 JTF741.15**	**163721831 JTR752.39**	**163718333 JTC525Z3-098RL**	**163722217 JTA750B**

Codice JT *JT Code*	Casa *Mark*	Modello *Model*	CC	Da *From*	A *To*	Pignone Codice RMS - JT *Front Sprocket* *RMS - JT Code*	Corona Codice RMS - JT *Rear Sprocket* *RMS - JT Code*	Catena Codice RMS - JT *Chain* *RMS - JT Code*	Carrier Codice RMS - JT *RMS - JT Code*
JTK001500	DUCATI	916 Monster S4	916	2001	2003	**163720725 JTF740.15**	**163721823 JTR745.37**	**163718334 JTC525Z3-100RL**	
JTK001510	DUCATI	1000 Sport	1000	2006	2006	**163720728 JTF741.15**	**163721824 JTR745.38**	**163718334 JTC525Z3-100RL**	
JTK001520	DUCATI	1000 Monster i.e.	1000	2003	2005	**163720728 JTF741.15**	**163721825 JTR745.39**	**163718334 JTC525Z3-100RL**	
	DUCATI	1000 S Monster i.e.	1000	2004	2005	**163720728 JTF741.15**	**163721825 JTR745.39**	**163718334 JTC525Z3-100RL**	
	DUCATI	1000 Sport S	1000	2007	2009	**163720728 JTF741.15**	**163721825 JTR745.39**	**163718334 JTC525Z3-100RL**	
JTK001530	DUCATI	996 Sport Touring ST4S	996	2002	2005	**163720725 JTF740.15**	**163721824 JTR745.38**	**163718335 JTC525Z3-102RL**	
	DUCATI	996 Sport Touring ST4S ABS	996	2003	2005	**163720725 JTF740.15**	**163721824 JTR745.38**	**163718335 JTC525Z3-102RL**	
JTK001540	DUCATI	1099 Steetfighter	1099	2009	2011	**163720728 JTF741.15**	**163721834 JTR761.38**	**163718335 JTC525Z3-102RL**	**163722218 JTA760B**
	DUCATI	1099 Steetfighter S	1099	2009	2013	**163720728 JTF741.15**	**163721834 JTR761.38**	**163718335 JTC525Z3-102RL**	**163722218 JTA760B**
JTK001550	DUCATI	944 Sport Turismo ST2	944	1997	2003	**163720725 JTF740.15**	**163721826 JTR745.42**	**163718335 JTC525Z3-102RL**	
JTK001560	DUCATI	992 Sport Touring ST3	992	2004	2007	**163720728 JTF741.15**	**163721826 JTR745.42**	**163718335 JTC525Z3-102RL**	
	DUCATI	992 Sport Touring ST3 (ABS)	992	2007	2007	**163720728 JTF741.15**	**163721826 JTR745.42**	**163718335 JTC525Z3-102RL**	
JTK001570	DUCATI	1000 Multistrada DS	1000	2004	2006	**163720728 JTF741.15**	**163721833 JTR752.42**	**163718335 JTC525Z3-102RL**	**163722217 JTA750B**
	DUCATI	1000 S Multistrada DS	1000	2005	2006	**163720728 JTF741.15**	**163721833 JTR752.42**	**163718335 JTC525Z3-102RL**	**163722217 JTA750B**
JTK001580	DUCATI	916 Sport Touring ST4	916	1999	2003	**163720725 JTF740.15**	**163721827 JTR745.43**	**163718335 JTC525Z3-102RL**	
JTK001590	DUCATI	795 Monster	795	2012	2015	**163720725 JTF740.15**	**163721831 JTR752.39**	**163718336 JTC525Z3-104RL**	**163722217 JTA750B**
	DUCATI	796 Monster	796	2012	2015	**163720725 JTF740.15**	**163721831 JTR752.39**	**163718336 JTC525Z3-104RL**	**163722217 JTA750B**
	DUCATI	796 Monster Corse Stripe	796	2015	2015	**163720725 JTF740.15**	**163721831 JTR752.39**	**163718336 JTC525Z3-104RL**	**163722217 JTA750B**
JTK001600	DUCATI	1100 Monster	1100	2009	2010	**163720728 JTF741.15**	**163721831 JTR752.39**	**163718336 JTC525Z3-104RL**	**163722217 JTA750B**
	DUCATI	1100 Monster Diesel	1100	2013	2013	**163720728 JTF741.15**	**163721831 JTR752.39**	**163718336 JTC525Z3-104RL**	**163722217 JTA750B**
	DUCATI	1100 Monster Evo	1100	2011	2013	**163720728 JTF741.15**	**163721831 JTR752.39**	**163718336 JTC525Z3-104RL**	**163722217 JTA750B**
	DUCATI	1100 S Monster	1100	2009	2010	**163720728 JTF741.15**	**163721831 JTR752.39**	**163718336 JTC525Z3-104RL**	**163722217 JTA750B**
JTK001610	DUCATI	796 Hypermotard	796	2010	2011	**163720725 JTF740.15**	**163721832 JTR752.41**	**163718336 JTC525Z3-104RL**	**163722217 JTA750B**
JTK001620	DUCATI	796 Hypermotard	796	2012	2012	**163720728 JTF741.15**	**163721832 JTR752.41**	**163718336 JTC525Z3-104RL**	**163722217 JTA750B**
	DUCATI	1000 Monster S2R	1000	2006	2008	**163720728 JTF741.15**	**163721832 JTR752.41**	**163718336 JTC525Z3-104RL**	**163722217 JTA750B**
	DUCATI	1100 Hypermotard Evo / SP Evo	1100	2010	2012	**163720728 JTF741.15**	**163721832 JTR752.41**	**163718336 JTC525Z3-104RL**	**163722217 JTA750B**
	DUCATI	1100 Hypermotard Evo SP Corse Edition	1100	2012	2012	**163720728 JTF741.15**	**163721832 JTR752.41**	**163718336 JTC525Z3-104RL**	**163722217 JTA750B**
JTK001630	DUCATI	848 Streetfighter	848	2012	2015	**163720728 JTF741.15**	**163721833 JTR752.42**	**163718336 JTC525Z3-104RL**	**163722217 JTA750B**
	DUCATI	1000 Monster S2R	1000	2005	2005	**163720728 JTF741.15**	**163721833 JTR752.42**	**163718336 JTC525Z3-104RL**	**163722217 JTA750B**
	DUCATI	1100 Hypermotard	1100	2008	2009	**163720728 JTF741.15**	**163721833 JTR752.42**	**163718336 JTC525Z3-104RL**	**163722217 JTA750B**
	DUCATI	1100 S Hypermotard	1100	2008	2009	**163720728 JTF741.15**	**163721833 JTR752.42**	**163718336 JTC525Z3-104RL**	**163722217 JTA750B**
JTK001640	DUCATI	916 Monster S4R	916	2004	2006	**163720725 JTF740.15**	**163721833 JTR752.42**	**163718336 JTC525Z3-104RL**	**163722217 JTA750B**
	DUCATI	996 Monster S4R	996	2004	2006	**163720725 JTF740.15**	**163721833 JTR752.42**	**163718336 JTC525Z3-104RL**	**163722217 JTA750B**

Codice JT *JT Code*	**Casa** *Mark*	**Modello** *Model*	**CC**	**Da** *From*	**A** *To*	**Pignone Codice RMS - JT** *Front Sprocket RMS - JT Code*	**Corona Codice RMS - JT** *Rear Sprocket RMS - JT Code*	**Catena Codice RMS - JT** *Chain RMS - JT Code*	**Carrier Codice RMS - JT** *RMS - JT Code*
JTK001650	TRIUMPH	800 Bonneville	800	2002	2006	**163720032 JTF1183.17**	**163721215 JTR1792.43**	**163718315 JTC525X1R104RL**	
	TRIUMPH	800 Bonneville T100	800	2003	2005	**163720032 JTF1183.17**	**163721215 JTR1792.43**	**163718315 JTC525X1R104RL**	
	TRIUMPH	800 Bonneville T100 Centennial Edition	800	2002	2002	**163720032 JTF1183.17**	**163721215 JTR1792.43**	**163718315 JTC525X1R104RL**	
JTK001660	TRIUMPH	865 Bonneville	865	2007	2015	**163720033 JTF1183.18**	**163721215 JTR1792.43**	**163718336 JTC525Z3-104RL**	
	TRIUMPH	865 Bonneville Black	865	2007	2007	**163720033 JTF1183.18**	**163721215 JTR1792.43**	**163718336 JTC525Z3-104RL**	
	TRIUMPH	865 Bonneville Land Speed Special Edition	865	2015	2015	**163720033 JTF1183.18**	**163721215 JTR1792.43**	**163718336 JTC525Z3-104RL**	
	TRIUMPH	865 Bonneville Newchurch Special	865	2015	2015	**163720033 JTF1183.18**	**163721215 JTR1792.43**	**163718336 JTC525Z3-104RL**	
	TRIUMPH	865 Bonneville SE	865	2010	2012	**163720033 JTF1183.18**	**163721215 JTR1792.43**	**163718336 JTC525Z3-104RL**	
	TRIUMPH	865 Bonneville Steve Mc Queen Edition	865	2013	2014	**163720033 JTF1183.18**	**163721215 JTR1792.43**	**163718336 JTC525Z3-104RL**	
	TRIUMPH	865 Bonneville T100	865	2006	2015	**163720033 JTF1183.18**	**163721215 JTR1792.43**	**163718336 JTC525Z3-104RL**	
	TRIUMPH	865 Bonneville T100 110th Anniversary Edition	865	2013	2014	**163720033 JTF1183.18**	**163721215 JTR1792.43**	**163718336 JTC525Z3-104RL**	
	TRIUMPH	865 Bonneville T100 Black	865	2015	2015	**163720033 JTF1183.18**	**163721215 JTR1792.43**	**163718336 JTC525Z3-104RL**	
	TRIUMPH	865 Bonneville T100 Spirit Special	865	2015	2015	**163720033 JTF1183.18**	**163721215 JTR1792.43**	**163718336 JTC525Z3-104RL**	
	TRIUMPH	865 Thruxton	865	2007	2015	**163720033 JTF1183.18**	**163721215 JTR1792.43**	**163718336 JTC525Z3-104RL**	
	TRIUMPH	865 Thruxton Ace Cafe	865	2015	2015	**163720033 JTF1183.18**	**163721215 JTR1792.43**	**163718336 JTC525Z3-104RL**	
JTK001670	TRIUMPH	600 Speed Four	600	2003	2005	**163720030 JTF1182.14**	**163721214 JTR1792.42**	**163718316 JTC525X1R106RL**	
JTK001680	DUCATI	1100 Multistrada	1100	2007	2009	**163720728 JTF741.15**	**163721833 JTR752.42**	**163718337 JTC525Z3-106RL**	**163722217 JTA750B**
	DUCATI	1100 S Multistrada	1100	2007	2009	**163720728 JTF741.15**	**163721833 JTR752.42**	**163718337 JTC525Z3-106RL**	**163722217 JTA750B**
JTK001690	APRILIA	RSV R	1000	2004	2009	**163720693 JTF704.16**	**163721789 JTR702.40**	**163718337 JTC525Z3-106RL**	
	APRILIA	Tuono R Racing	1000	2006	2011	**163720693 JTF704.16**	**163721789 JTR702.40**	**163718337 JTC525Z3-106RL**	
JTK001700	TRIUMPH	865 Scrambler	865	2015	2015	**163720033 JTF1183.18**	**163721215 JTR1792.43**	**163718337 JTC525Z3-106RL**	
JTK001710	TRIUMPH	600 Daytona	600	2003	2004	**163720030 JTF1182.14**	**163721217 JTR1792.45**	**163718317 JTC525X1R108RL**	
JTK001720	HONDA	VFR400 R3	400	1990	1993	**163720351 JTF297.15**	**163721575 JTR312.40**	**163718317 JTC525X1R108RL**	
JTK001730	HONDA	CB500	500	1994	2003	**163720351 JTF297.15**	**163721108 JTR1332.40**	**163718317 JTC525X1R108RL**	
JTK001740	KAWASAKI	ZX-6R (ZX600) Ninja	600	1998	2002	**163720164 JTF1535.15**	**163721182 JTR1489.40**	**163718317 JTC525X1R108RL**	
	KAWASAKI	ZZ-R600 (ZX600)	600	2005	2008	**163720164 JTF1535.15**	**163721182 JTR1489.40**	**163718317 JTC525X1R108RL**	
JTK001750	KAWASAKI	ZX-6R (ZX600) Ninja	600	1995	1997	**163720156 JTF1515.15**	**163721704 JTR498.40**	**163718317 JTC525X1R108RL**	
JTK001760	KAWASAKI	ZX-6R (ZX636) Ninja	636	2002	2002	**163720164 JTF1535.15**	**163721182 JTR1489.40**	**163718338 JTC525Z3-108RL**	
JTK001770	SUZUKI	SV650 S	650	1999	2009	**163720574 JTF520.15**	**163721896 JTR807.44**	**163718317 JTC525X1R108RL**	
JTK001780	SUZUKI	SV650 S	650	2010	2013	**163720574 JTF520.15**	**163721897 JTR807.45**	**163718338 JTC525Z3-108RL**	
JTK001790	KAWASAKI	ZR-7 (ZR750)	750	1999	2004	**163720575 JTF520.16**	**163721702 JTR498.38**	**163718317 JTC525X1R108RL**	
	KAWASAKI	ZR-7S (ZR750S)	750	2001	2004	**163720575 JTF520.16**	**163721702 JTR498.38**	**163718317 JTC525X1R108RL**	
JTK001800	HONDA	CBR900 RR Fire Blade	900	1996	1999	**163720104 JTF1370.16**	**163721079 JTR1304.42**	**163718338 JTC525Z3-108RL**	

Codice JT *JT Code*	Casa *Mark*	Modello *Model*	CC	Da *From*	A *To*	Pignone Codice RMS - JT *Front Sprocket* *RMS - JT Code*	Corona Codice RMS - JT *Rear Sprocket* *RMS - JT Code*	Catena Codice RMS - JT *Chain* *RMS - JT Code*	Carrier Codice RMS - JT *RMS - JT Code*
JTK001810	KAWASAKI	ZX-7RR (ZX750) Ninja	750	1996	1999	**163720575 JTF520.16**	**163721184 JTR1489.42**	**163718338 JTC525Z3-108RL**	
JTK001830	HONDA	CBR600 FX,FY	600	1999	2000	**163720104 JTF1370.16**	**163721081 JTR1304.44**	**163718317 JTC525X1R108RL**	
JTK001840	HONDA	CBR600 F	600	2002	2007	**163720104 JTF1370.16**	**163721092 JTR1307.45**	**163718317 JTC525X1R108RL**	
JTK001850	SUZUKI	GSX-R600	600	1998	2000	**163720575 JTF520.16**	**163721707 JTR498.46**	**163718317 JTC525X1R108RL**	
JTK001880	KAWASAKI	ZX-10R (ZX1000) Ninja	1000	2006	2007	**163720171 JTF1537.17**	**163721182 JTR1489.40**	**163718338 JTC525Z3-108RL**	
JTK001890	APRILIA	RSV Mille R,SL,SP	1000	1998	2003	**163720694 JTF704.17**	**163721791 JTR702.42**	**163718338 JTC525Z3-108RL**	
	APRILIA	RSV Tuono	1000	2003	2005	**163720694 JTF704.17**	**163721791 JTR702.42**	**163718338 JTC525Z3-108RL**	
JTK001900	KAWASAKI	Z1000 (ZR1000)	1000	2007	2009	**163720169 JTF1537.15**	**163721182 JTR1489.40**	**163718339 JTC525Z3-110RL**	
	KAWASAKI	Z1000 (ZR1000) ABS	1000	2007	2009	**163720169 JTF1537.15**	**163721182 JTR1489.40**	**163718339 JTC525Z3-110RL**	
JTK001910	HONDA	CB600 F Hornet	600	1998	2006	**163720106 JTF1371.15**	**163721079 JTR1304.42**	**163718318 JTC525X1R110RL**	
	HONDA	CB600 S F2 Hornet	600	2000	2003	**163720106 JTF1371.15**	**163721079 JTR1304.42**	**163718318 JTC525X1R110RL**	
JTK001920	HONDA	CBR600 FV,FW	600	1997	1998	**163720106 JTF1371.15**	**163721080 JTR1304.43**	**163718318 JTC525X1R110RL**	
JTK001930	SUZUKI	XF650 Freewind	650	1997	2002	**163720145 JTF1448.15**	**163721209 JTR1791.43**	**163718318 JTC525X1R110RL**	
JTK001940	SUZUKI	SV650	650	1999	2008	**163720574 JTF520.15**	**163721897 JTR807.45**	**163718318 JTC525X1R110RL**	
JTK001950	KAWASAKI	ZX-9R (ZX900) Ninja	900	2002	2003	**163720170 JTF1537.16**	**163721183 JTR1489.41**	**163718339 JTC525Z3-110RL**	
JTK001960	KAWASAKI	ZX-7R (ZX750) Ninja	750	1996	2003	**163720575 JTF520.16**	**163721185 JTR1489.43**	**163718339 JTC525Z3-110RL**	
JTK001970	SUZUKI	GSX-R750 Fuel Injection SRAD	750	1998	1999	**163720575 JTF520.16**	**163721705 JTR498.44**	**163718339 JTC525Z3-110RL**	
JTK001980	SUZUKI	GSX-R600	600	2001	2005	**163720575 JTF520.16**	**163721217 JTR1792.45**	**163718318 JTC525X1R110RL**	
JTK001990	YAMAHA	MT-09 (MTN850 A)	850	2014	2018	**163720217 JTF1591.16**	**163721306 JTR1876.45**	**163718339 JTC525Z3-110RL**	
	YAMAHA	MT-09 SP (MTN850 D)	850	2018	2018	**163720217 JTF1591.16**	**163721306 JTR1876.45**	**163718339 JTC525Z3-110RL**	
	YAMAHA	MT-09 Sport Tracker (ABS)	850	2015	2016	**163720217 JTF1591.16**	**163721306 JTR1876.45**	**163718339 JTC525Z3-110RL**	
	YAMAHA	MT-09 SR Street Rally (ABS)	850	2014	2016	**163720217 JTF1591.16**	**163721306 JTR1876.45**	**163718339 JTC525Z3-110RL**	
	YAMAHA	MT-09 Tracer	850	2016	2017	**163720217 JTF1591.16**	**163721306 JTR1876.45**	**163718339 JTC525Z3-110RL**	
	YAMAHA	XSR900 (MTM850)	850	2016	2017	**163720217 JTF1591.16**	**163721306 JTR1876.45**	**163718339 JTC525Z3-110RL**	
JTK002000	KAWASAKI	ZX-10R (ZX1000) Ninja	1000	2004	2005	**163720171 JTF1537.17**	**163721181 JTR1489.39**	**163718339 JTC525Z3-110RL**	
JTK002010	YAMAHA	TRX850	850	1996	2000	**163720208 JTF1586.17**	**163721557 JTR300.39**	**163718318 JTC525X1R110RL**	
JTK002020	KAWASAKI	ZX-10R (ZX1000) Ninja	1000	2008	2010	**163720171 JTF1537.17**	**163721183 JTR1489.41**	**163718339 JTC525Z3-110RL**	
JTK002030	SUZUKI	GSX-R750 Fuel Injection SRAD	750	2000	2003	**163720576 JTF520.17**	**163721214 JTR1792.42**	**163718339 JTC525Z3-110RL**	
JTK002040	SUZUKI	GSX-R750 Fuel Injection	750	2004	2005	**163720576 JTF520.17**	**163721215 JTR1792.43**	**163718339 JTC525Z3-110RL**	
JTK002050	HONDA	CB750 F2	750	1992	2003	**163720092 JTF1332.15**	**163721108 JTR1332.40**	**163718319 JTC525X1R112RL**	
JTK002060	KAWASAKI	Z1000 SX (ZR1000)	1000	2011	2018	**163720169 JTF1537.15**	**163721183 JTR1489.41**	**163718340 JTC525Z3-112RL**	
	KAWASAKI	Z1000 SX (ZR1000) ABS	1000	2011	2017	**163720169 JTF1537.15**	**163721183 JTR1489.41**	**163718340 JTC525Z3-112RL**	
	KAWASAKI	Z1000 SX City (ZR1000)	1000	2011	2011	**163720169 JTF1537.15**	**163721183 JTR1489.41**	**163718340 JTC525Z3-112RL**	

Codice JT *JT Code*	**Casa** *Mark*	**Modello** *Model*	**CC**	**Da** *From*	**A** *To*	**Pignone Codice RMS - JT** *Front Sprocket RMS - JT Code*	**Corona Codice RMS - JT** *Rear Sprocket RMS - JT Code*	**Catena Codice RMS - JT** *Chain RMS - JT Code*	**Carrier Codice RMS - JT** *RMS - JT Code*
	KAWASAKI	Z1000 SX Tourer (ZR1000)	1000	2011	2015	**163720169 JTF1537.15**	**163721183 JTR1489.41**	**163718340 JTC525Z3-112RL**	
JTK002070	KAWASAKI	Z1000 (ZR1000)	1000	2010	2014	**163720169 JTF1537.15**	**163721184 JTR1489.42**	**163718340 JTC525Z3-112RL**	
	KAWASAKI	Z1000 (ZR1000) ABS	1000	2011	2013	**163720169 JTF1537.15**	**163721184 JTR1489.42**	**163718340 JTC525Z3-112RL**	
	KAWASAKI	Z1000 (ZR1000) Black Edition	1000	2012	2012	**163720169 JTF1537.15**	**163721184 JTR1489.42**	**163718340 JTC525Z3-112RL**	
	KAWASAKI	Z1000 Special Edition	1000	2013	2013	**163720169 JTF1537.15**	**163721184 JTR1489.42**	**163718340 JTC525Z3-112RL**	
JTK002080	KAWASAKI	Z1000 (ZR1000) ABS	1000	2014	2018	**163720169 JTF1537.15**	**163721185 JTR1489.43**	**163718340 JTC525Z3-112RL**	
	KAWASAKI	Z1000 R (ZR1000)	1000	2017	2018	**163720169 JTF1537.15**	**163721185 JTR1489.43**	**163718340 JTC525Z3-112RL**	
	KAWASAKI	Z1000 Special Edition	1000	2014	2015	**163720169 JTF1537.15**	**163721185 JTR1489.43**	**163718340 JTC525Z3-112RL**	
JTK002090	HONDA	CBR600 RR C-ABS	600	2010	2015	**163720104 JTF1370.16**	**163721088 JTR1307.41**	**163718340 JTC525Z3-112RL**	
JTK002100	HONDA	CBR600 RA	600	2010	2016	**163720104 JTF1370.16**	**163721088 JTR1307.41**	**163718319 JTC525X1R112RL**	
	HONDA	CBR600 RR	600	2007	2016	**163720104 JTF1370.16**	**163721088 JTR1307.41**	**163718319 JTC525X1R112RL**	
JTK002110	HONDA	CBR600 RR	600	2003	2006	**163720104 JTF1370.16**	**163721089 JTR1307.42**	**163718319 JTC525X1R112RL**	
JTK002120	KAWASAKI	Z1000 (ZR1000)	1000	2003	2006	**163720170 JTF1537.16**	**163721184 JTR1489.42**	**163718340 JTC525Z3-112RL**	
JTK002130	HONDA	CBR600 F	600	2001	2001	**163720104 JTF1370.16**	**163721092 JTR1307.45**	**163718319 JTC525X1R112RL**	
JTK002140	HONDA	CBR600 FS Sport	600	2001	2002	**163720104 JTF1370.16**	**163721093 JTR1307.46**	**163718319 JTC525X1R112RL**	
JTK002150	HONDA	XL1000 V Varadero	1000	1999	2013	**163720104 JTF1370.16**	**163721083 JTR1304.47**	**163718340 JTC525Z3-112RL**	
JTK002160	HONDA	VT750 S	750	2011	2013	**163720107 JTF1372.17**	**163721076 JTR1304.38**	**163718319 JTC525X1R112RL**	
JTK002170	KAWASAKI	ZX-10R (ZX1000) Ninja	1000	2011	2015	**163720171 JTF1537.17**	**163721181 JTR1489.39**	**163718340 JTC525Z3-112RL**	
	KAWASAKI	ZX-10R (ZX1000) Ninja ABS	1000	2011	2015	**163720171 JTF1537.17**	**163721181 JTR1489.39**	**163718340 JTC525Z3-112RL**	
JTK002180	KAWASAKI	KLV1000	1000	2004	2006	**163720171 JTF1537.17**	**163721213 JTR1792.41**	**163718340 JTC525Z3-112RL**	
JTK002190	SUZUKI	GSX-S750	750	2015	2016	**163720576 JTF520.17**	**163721214 JTR1792.42**	**163718340 JTC525Z3-112RL**	
	SUZUKI	GSX-S750 Z	750	2015	2016	**163720576 JTF520.17**	**163721214 JTR1792.42**	**163718340 JTC525Z3-112RL**	
	SUZUKI	DL1000 SE V-Strom	1000	2010	2010	**163720576 JTF520.17**	**163721214 JTR1792.42**	**163718340 JTC525Z3-112RL**	
	SUZUKI	DL1000 V-Strom	1000	2002	2010	**163720576 JTF520.17**	**163721214 JTR1792.42**	**163718340 JTC525Z3-112RL**	
JTK002200	TRIUMPH	800 America	800	2003	2006	**163720032 JTF1183.17**	**163721110 JTR1332.42**	**163718319 JTC525X1R112RL**	
	TRIUMPH	800 Speedmaster	800	2003	2005	**163720032 JTF1183.17**	**163721110 JTR1332.42**	**163718319 JTC525X1R112RL**	
JTK002210	TRIUMPH	865 America	865	2007	2012	**163720032 JTF1183.17**	**163721110 JTR1332.42**	**163718340 JTC525Z3-112RL**	
	TRIUMPH	865 America LT	865	2014	2015	**163720032 JTF1183.17**	**163721110 JTR1332.42**	**163718340 JTC525Z3-112RL**	
JTK002220	SUZUKI	GSX-R1000 525 Chain Conversion	1000	2007	2008	**163720576 JTF520.17**	**163721215 JTR1792.43**	**163718340 JTC525Z3-112RL**	
JTK002230	TRIUMPH	865 America	865	2013	2015	**163720033 JTF1183.18**	**163721110 JTR1332.42**	**163718340 JTC525Z3-112RL**	
	TRIUMPH	865 Speedmaster	865	2006	2015	**163720033 JTF1183.18**	**163721110 JTR1332.42**	**163718340 JTC525Z3-112RL**	
JTK002240	SUZUKI	SV650 A/SA(ABS)	650	2007	2010	**163720574 JTF520.15**	**163721897 JTR807.45**	**163718320 JTC525X1R114RL**	
JTK002250	YAMAHA	YZF R1	1000	2015	2017	**163720217 JTF1591.16**	**163721308 JTR1877.41**	**163718341 JTC525Z3-114RL**	

Codice JT *JT Code*	Casa *Mark*	Modello *Model*	CC	Da *From*	A *To*	Pignone Codice RMS - JT *Front Sprocket* *RMS - JT Code*	Corona Codice RMS - JT *Rear Sprocket* *RMS - JT Code*	Catena Codice RMS - JT *Chain* *RMS - JT Code*	Carrier Codice RMS - JT *RMS - JT Code*
	YAMAHA	YZF R1 M	1000	2015	2017	**163720217** **JTF1591.16**	**163721308** **JTR1877.41**	**163718341** **JTC525Z3-114RL**	
JTK002260	SUZUKI	GSX-R600	600	2006	2010	**163720575** **JTF520.16**	**163721215** **JTR1792.43**	**163718320** **JTC525X1R114RL**	
JTK002270	SUZUKI	GSX-R600	600	2011	2018	**163720575** **JTF520.16**	**163721305** **JTR1876.43**	**163718341** **JTC525Z3-114RL**	
JTK002280	YAMAHA	TDM850	850	1999	2001	**163720575** **JTF520.16**	**163722181** **JTR867.43**	**163718320** **JTC525X1R114RL**	
JTK002290	YAMAHA	TDM850	850	1991	1995	**163720575** **JTF520.16**	**163722182** **JTR867.44**	**163718320** **JTC525X1R114RL**	
JTK002300	YAMAHA	YZF-R6	600	2006	2018	**163720207** **JTF1586.16**	**163721306** **JTR1876.45**	**163718341** **JTC525Z3-114RL**	
	YAMAHA	YZF-R6 50th Anniversary Edition	600	2012	2012	**163720207** **JTF1586.16**	**163721306** **JTR1876.45**	**163718341** **JTC525Z3-114RL**	
JTK002310	SUZUKI	GSR600	600	2006	2010	**163720575** **JTF520.16**	**163721219** **JTR1792.48**	**163718320** **JTC525X1R114RL**	
	SUZUKI	GSR600 Yoshimura	600	2010	2010	**163720575** **JTF520.16**	**163721219** **JTR1792.48**	**163718320** **JTC525X1R114RL**	
JTK002320	YAMAHA	TDM850	850	1996	1998	**163720208** **JTF1586.17**	**163722180** **JTR867.42**	**163718320** **JTC525X1R114RL**	
JTK002330	HONDA	CBF500	500	2004	2008	**163720351** **JTF297.15**	**163721078** **JTR1304.41**	**163718321** **JTC525X1R116RL**	
	HONDA	CBF500 ABS	500	2004	2008	**163720351** **JTF297.15**	**163721078** **JTR1304.41**	**163718321** **JTC525X1R116RL**	
JTK002340	HONDA	CBF600 N	600	2004	2007	**163720106** **JTF1371.15**	**163721080** **JTR1304.43**	**163718321** **JTC525X1R116RL**	
	HONDA	CBF600 S ABS	600	2004	2005	**163720106** **JTF1371.15**	**163721080** **JTR1304.43**	**163718321** **JTC525X1R116RL**	
	HONDA	CBF600 S Cowl ABS	600	2006	2007	**163720106** **JTF1371.15**	**163721080** **JTR1304.43**	**163718321** **JTC525X1R116RL**	
JTK002350	KAWASAKI	KLZ1000 Versys	1000	2012	2018	**163720169** **JTF1537.15**	**163721185** **JTR1489.43**	**163718342** **JTC525Z3-116RL**	
JTK002360	SUZUKI	DL650 V-Strom	650	2004	2006	**163720574** **JTF520.15**	**163721218** **JTR1792.47**	**163718321** **JTC525X1R116RL**	
JTK002370	BMW	F800 GS (JTR6.42 for 8.5mm bolts)	800	2008	2018	**163720693** **JTF704.16**	**163721781** **JTR6.42**	**163718342** **JTC525Z3-116RL**	
JTK002380	BMW	F800 GS (JTR3.42 for 10.5mm bolts)	800	2008	2018	**163720693** **JTF704.16**	**163721584** **JTR3.42**	**163718342** **JTC525Z3-116RL**	
	BMW	F800 GS Triple Black	800	2012	2012	**163720693** **JTF704.16**	**163721584** **JTR3.42**	**163718342** **JTC525Z3-116RL**	
	BMW	F800 GS Trophy	800	2012	2012	**163720693** **JTF704.16**	**163721584** **JTR3.42**	**163718342** **JTC525Z3-116RL**	
JTK002390	TRIUMPH	675 Daytona	675	2006	2017	**163720575** **JTF520.16**	**163721337** **JTR2014.47**	**163718342** **JTC525Z3-116RL**	
	TRIUMPH	675 Daytona R	675	2011	2017	**163720575** **JTF520.16**	**163721337** **JTR2014.47**	**163718342** **JTC525Z3-116RL**	
JTK002400	BMW	F650 GS (JTR6.41 for 8.5mm bolts)	650	2008	2012	**163720694** **JTF704.17**	**163721780** **JTR6.41**	**163718342** **JTC525Z3-116RL**	
JTK002410	BMW	F650 GS (JTR3.41 for 10.5mm bolts)	650	2008	2012	**163720694** **JTF704.17**	**163721583** **JTR3.41**	**163718342** **JTC525Z3-116RL**	
	BMW	F650 GS SE	650	2012	2012	**163720694** **JTF704.17**	**163721583** **JTR3.41**	**163718342** **JTC525Z3-116RL**	
JTK002420	BMW	F700 GS	700	2013	2018	**163720694** **JTF704.17**	**163721584** **JTR3.42**	**163718342** **JTC525Z3-116RL**	
	BMW	F800 GS Adventure	800	2013	2018	**163720694** **JTF704.17**	**163721584** **JTR3.42**	**163718342** **JTC525Z3-116RL**	
JTK002430	SUZUKI	GSX-R750	750	2006	2010	**163720576** **JTF520.17**	**163721217** **JTR1792.45**	**163718342** **JTC525Z3-116RL**	
JTK002440	SUZUKI	GSX-R750	750	2011	2018	**163720576** **JTF520.17**	**163721306** **JTR1876.45**	**163718342** **JTC525Z3-116RL**	
	SUZUKI	GSX-R750 Moto GP	750	2016	2016	**163720576** **JTF520.17**	**163721306** **JTR1876.45**	**163718342** **JTC525Z3-116RL**	
JTK002450	HONDA	CB650 F / FA	650	2014	2018	**163720103** **JTF1370.15**	**163721079** **JTR1304.42**	**163718343** **JTC525Z3-118RL**	
	HONDA	CBR650 F / FA	650	2014	2018	**163720103** **JTF1370.15**	**163721079** **JTR1304.42**	**163718343** **JTC525Z3-118RL**	

Codice JT *JT Code*	**Casa** *Mark*	**Modello** *Model*	**CC**	**Da** *From*	**A** *To*	**Pignone Codice RMS - JT** *Front Sprocket RMS - JT Code*	**Corona Codice RMS - JT** *Rear Sprocket RMS - JT Code*	**Catena Codice RMS - JT** *Chain RMS - JT Code*	**Carrier Codice RMS - JT** *RMS - JT Code*
JTK002460	HONDA	XL700 V/VA Transalp	700	2008	2013	**163720348 JTF296.15**	**163721561 JTR300.47**	**163718343 JTC525Z3-118RL**	
JTK002470	SUZUKI	DL650 A V-Strom ABS	650	2007	2018	**163720574 JTF520.15**	**163721218 JTR1792.47**	**163718322 JTC525X1R118RL**	
	SUZUKI	DL650 A V-Strom ABS Adventure	650	2012	2015	**163720574 JTF520.15**	**163721218 JTR1792.47**	**163718322 JTC525X1R118RL**	
	SUZUKI	DL650 A V-Strom XT ABS	650	2015	2018	**163720574 JTF520.15**	**163721218 JTR1792.47**	**163718322 JTC525X1R118RL**	
	SUZUKI	DL650 V-Strom	650	2007	2012	**163720574 JTF520.15**	**163721218 JTR1792.47**	**163718322 JTC525X1R118RL**	
	SUZUKI	DL650 V-Strom X	650	2010	2011	**163720574 JTF520.15**	**163721218 JTR1792.47**	**163718322 JTC525X1R118RL**	
JTK002480	SUZUKI	DL650 A V-Strom ABS	650	2007	2015	**163720574 JTF520.15**	**163721218 JTR1792.47**	**163718343 JTC525Z3-118RL**	
	SUZUKI	DL650 A V-Strom ABS Adventure	650	2015	2015	**163720574 JTF520.15**	**163721218 JTR1792.47**	**163718343 JTC525Z3-118RL**	
	SUZUKI	DL650 A V-Strom GT	650	2010	2010	**163720574 JTF520.15**	**163721218 JTR1792.47**	**163718343 JTC525Z3-118RL**	
	SUZUKI	DL650 A V-Strom Traveller	650	2010	2010	**163720574 JTF520.15**	**163721218 JTR1792.47**	**163718343 JTC525Z3-118RL**	
	SUZUKI	DL650 A V-Strom XT ABS	650	2015	2015	**163720574 JTF520.15**	**163721218 JTR1792.47**	**163718343 JTC525Z3-118RL**	
JTK002490	HONDA	XL650 V Transalp	650	2001	2007	**163720348 JTF296.15**	**163721562 JTR300.48**	**163718322 JTC525X1R118RL**	
JTK002500	SUZUKI	GSF650 Bandit	650	2007	2009	**163720574 JTF520.15**	**163721900 JTR807.48**	**163718322 JTC525X1R118RL**	
	SUZUKI	GSF650 S Bandit Traveller	650	2010	2010	**163720574 JTF520.15**	**163721900 JTR807.48**	**163718322 JTC525X1R118RL**	
	SUZUKI	GSX650 F/FA	650	2008	2016	**163720574 JTF520.15**	**163721900 JTR807.48**	**163718322 JTC525X1R118RL**	
JTK002510	SUZUKI	GSF650 Bandit	650	2010	2011	**163720574 JTF520.15**	**163721900 JTR807.48**	**163718343 JTC525Z3-118RL**	
	SUZUKI	GSF650 SA Bandit (ABS)	650	2007	2015	**163720574 JTF520.15**	**163721900 JTR807.48**	**163718343 JTC525Z3-118RL**	
	SUZUKI	GSX650 F/FA	650	2008	2015	**163720574 JTF520.15**	**163721900 JTR807.48**	**163718343 JTC525Z3-118RL**	
JTK002520	YAMAHA	TDM900	900	2002	2013	**163720217 JTF1591.16**	**163721558 JTR300.42**	**163718343 JTC525Z3-118RL**	
	YAMAHA	TDM900 A ABS	900	2005	2013	**163720217 JTF1591.16**	**163721558 JTR300.42**	**163718343 JTC525Z3-118RL**	
JTK002530	KTM	990 Adventure	990	2010	2013	**163720243 JTF1904.16**	**163722209 JTR899.42**	**163718343 JTC525Z3-118RL**	
	KTM	990 Adventure R	990	2010	2013	**163720243 JTF1904.16**	**163722209 JTR899.42**	**163718343 JTC525Z3-118RL**	
JTK002540	HONDA	CB600 F Hornet	600	2007	2013	**163720104 JTF1370.16**	**163721080 JTR1304.43**	**163718343 JTC525Z3-118RL**	
	HONDA	CBR600 F	600	2011	2014	**163720104 JTF1370.16**	**163721080 JTR1304.43**	**163718343 JTC525Z3-118RL**	
JTK002550	KTM	950 Super Enduro R	950	2006	2010	**163720243 JTF1904.16**	**163722210 JTR899.45**	**163718343 JTC525Z3-118RL**	
JTK002560	TRIUMPH	675 Street Triple	675	2008	2016	**163720575 JTF520.16**	**163721337 JTR2014.47**	**163718343 JTC525Z3-118RL**	
	TRIUMPH	675 Street Triple R	675	2010	2016	**163720575 JTF520.16**	**163721337 JTR2014.47**	**163718343 JTC525Z3-118RL**	
JTK002570	KTM	990 Superduke	990	2005	2012	**163720244 JTF1904.17**	**163722205 JTR898.38**	**163718343 JTC525Z3-118RL**	
	KTM	990 Superduke R	990	2010	2011	**163720244 JTF1904.17**	**163722205 JTR898.38**	**163718343 JTC525Z3-118RL**	
	KTM	1190 RC8	1190	2010	2011	**163720244 JTF1904.17**	**163722205 JTR898.38**	**163718343 JTC525Z3-118RL**	
	KTM	1190 RC8 R	1190	2011	2015	**163720244 JTF1904.17**	**163722205 JTR898.38**	**163718343 JTC525Z3-118RL**	
	KTM	1190 RC8 R Track	1190	2011	2013	**163720244 JTF1904.17**	**163722205 JTR898.38**	**163718343 JTC525Z3-118RL**	
JTK002580	KTM	950 LC8 Supermoto	950	2006	2009	**163720244 JTF1904.17**	**163722206 JTR898.41**	**163718343 JTC525Z3-118RL**	

Codice JT *JT Code*	Casa *Mark*	Modello *Model*	CC	Da *From*	A *To*	Pignone Codice RMS - JT *Front Sprocket* *RMS - JT Code*	Corona Codice RMS - JT *Rear Sprocket* *RMS - JT Code*	Catena Codice RMS - JT *Chain* *RMS - JT Code*	Carrier Codice RMS - JT *RMS - JT Code*
	KTM	950 LC8 Supermoto R	950	2007	2008	**163720244 JTF1904.17**	**163722206 JTR898.41**	**163718343 JTC525Z3-118RL**	
	KTM	990 SM R	990	2010	2014	**163720244 JTF1904.17**	**163722206 JTR898.41**	**163718343 JTC525Z3-118RL**	
	KTM	990 SM T	990	2010	2013	**163720244 JTF1904.17**	**163722206 JTR898.41**	**163718343 JTC525Z3-118RL**	
	KTM	990 Supermoto	990	2008	2010	**163720244 JTF1904.17**	**163722206 JTR898.41**	**163718343 JTC525Z3-118RL**	
JTK002590	KTM	950 LC8 Adventure	950	2003	2006	**163720244 JTF1904.17**	**163722209 JTR899.42**	**163718343 JTC525Z3-118RL**	
	KTM	950 LC8 Adventure S	950	2004	2006	**163720244 JTF1904.17**	**163722209 JTR899.42**	**163718343 JTC525Z3-118RL**	
	KTM	990 Adventure	990	2005	2009	**163720244 JTF1904.17**	**163722209 JTR899.42**	**163718343 JTC525Z3-118RL**	
	KTM	990 Adventure S	990	2006	2008	**163720244 JTF1904.17**	**163722209 JTR899.42**	**163718343 JTC525Z3-118RL**	
	KTM	1050 Adventure	1050	2015	2016	**163720244 JTF1904.17**	**163722209 JTR899.42**	**163718343 JTC525Z3-118RL**	
	KTM	1090 Adventure	1090	2017	2018	**163720244 JTF1904.17**	**163722209 JTR899.42**	**163718343 JTC525Z3-118RL**	
	KTM	1090 Adventure R	1090	2017	2018	**163720244 JTF1904.17**	**163722209 JTR899.42**	**163718343 JTC525Z3-118RL**	
	KTM	1190 Adventure	1190	2013	2016	**163720244 JTF1904.17**	**163722209 JTR899.42**	**163718343 JTC525Z3-118RL**	
	KTM	1190 Adventure R	1190	2013	2016	**163720244 JTF1904.17**	**163722209 JTR899.42**	**163718343 JTC525Z3-118RL**	
	KTM	1290 Superadventure	1290	2015	2016	**163720244 JTF1904.17**	**163722209 JTR899.42**	**163718343 JTC525Z3-118RL**	
	KTM	1290 Superadventure R	1290	2017	2018	**163720244 JTF1904.17**	**163722209 JTR899.42**	**163718343 JTC525Z3-118RL**	
	KTM	1290 Superadventure S	1290	2017	2018	**163720244 JTF1904.17**	**163722209 JTR899.42**	**163718343 JTC525Z3-118RL**	
	KTM	1290 Superadventure T	1290	2017	2018	**163720244 JTF1904.17**	**163722209 JTR899.42**	**163718343 JTC525Z3-118RL**	
JTK002600	BMW	S1000 RR	1000	2009	2011	**163720423 JTF404.17**	**163721846 JTR7.44**	**163718343 JTC525Z3-118RL**	
	BMW	S1000 RR Sport	1000	2010	2010	**163720423 JTF404.17**	**163721846 JTR7.44**	**163718343 JTC525Z3-118RL**	
JTK002610	BMW	S1000 R	1000	2013	2018	**163720423 JTF404.17**	**163721847 JTR7.45**	**163718343 JTC525Z3-118RL**	
	BMW	S1000 RR	1000	2012	2018	**163720423 JTF404.17**	**163721847 JTR7.45**	**163718343 JTC525Z3-118RL**	
JTK002620	HONDA	XL600 V Transalp	600	1991	2000	**163720348 JTF296.15**	**163721561 JTR300.47**	**163718323 JTC525X1R120RL**	
JTK002640	HONDA	VT600 C Shadow	600	1990	2007	**163720349 JTF296.16**	**163721112 JTR1332.44**	**163718323 JTC525X1R120RL**	
	HONDA	VT600 CD Shadow Deluxe	600	1994	2000	**163720349 JTF296.16**	**163721112 JTR1332.44**	**163718323 JTC525X1R120RL**	
	HONDA	VT600 CD/CD2 Shadow Deluxe	600	2001	2007	**163720349 JTF296.16**	**163721112 JTR1332.44**	**163718323 JTC525X1R120RL**	
JTK002660	KTM	990 SM R	990	2010	2013	**163720244 JTF1904.17**	**163722206 JTR898.41**	**163718344 JTC525Z3-120RL**	
JTK002670	KTM	1050 Adventure	1050	2015	2015	**163720244 JTF1904.17**	**163722209 JTR899.42**	**163718344 JTC525Z3-120RL**	
JTK002680	BMW	F800 R (JTR6.47 for 8.5mm bolts)	800	2009	2018	**163720425 JTF405.20**	**163721782 JTR6.47**	**163718344 JTC525Z3-120RL**	
JTK002690	BMW	F800 R (JTR3.47 for 10.5mm bolts)	800	2009	2018	**163720425 JTF405.20**	**163721585 JTR3.47**	**163718344 JTC525Z3-120RL**	
JTK002700	YAMAHA	FZ8 N/NA	800	2010	2015	**163720217 JTF1591.16**	**163721560 JTR300.46**	**163718345 JTC525Z3-122RL**	
	YAMAHA	FZ8 S/SA Fazer 8	800	2010	2015	**163720217 JTF1591.16**	**163721560 JTR300.46**	**163718345 JTC525Z3-122RL**	
JTK002710	TRIUMPH	800 Tiger	800	2011	2016	**163720575 JTF520.16**	**163721338 JTR2014.50**	**163718345 JTC525Z3-122RL**	
JTK002720	HONDA	VT750 C Shadow	750	2004	2007	**163720107 JTF1372.17**	**163721078 JTR1304.41**	**163718324 JTC525X1R122RL**	

Codice JT *JT Code*	**Casa** *Mark*	**Modello** *Model*	**CC**	**Da** *From*	**A** *To*	**Pignone Codice RMS - JT** *Front Sprocket RMS - JT Code*	**Corona Codice RMS - JT** *Rear Sprocket RMS - JT Code*	**Catena Codice RMS - JT** *Chain RMS - JT Code*	**Carrier Codice RMS - JT** *RMS - JT Code*
	HONDA	VT750 C,CD Shadow	750	1998	2003	**163720107 JTF1372.17**	**163721078 JTR1304.41**	**163718324 JTC525X1R122RL**	
	HONDA	VT750 C2 Shadow	750	2000	2003	**163720107 JTF1372.17**	**163721078 JTR1304.41**	**163718324 JTC525X1R122RL**	
	HONDA	VT750 CD2 Shadow Deluxe	750	1998	2003	**163720107 JTF1372.17**	**163721078 JTR1304.41**	**163718324 JTC525X1R122RL**	
	HONDA	VT750 DC Black Widow	750	2000	2003	**163720107 JTF1372.17**	**163721078 JTR1304.41**	**163718324 JTC525X1R122RL**	
JTK002730	HONDA	VT750 DC Shadow Spirit	750	2001	2007	**163720107 JTF1372.17**	**163721079 JTR1304.42**	**163718324 JTC525X1R122RL**	
JTK002740	HONDA	CBF600 N/NA	600	2008	2011	**163720104 JTF1370.16**	**163721079 JTR1304.42**	**163718325 JTC525X1R124RL**	
	HONDA	CBF600 S/SA ABS	600	2008	2012	**163720104 JTF1370.16**	**163721079 JTR1304.42**	**163718325 JTC525X1R124RL**	
JTK002750	HONDA	XRV750 Africa Twin	750	1993	2003	**163720363 JTF314.16**	**163721113 JTR1332.45**	**163718325 JTC525X1R124RL**	
JTK002760	HONDA	XRV750 Africa Twin	750	1990	1992	**163720363 JTF314.16**	**163721114 JTR1332.46**	**163718325 JTC525X1R124RL**	
JTK002770	HONDA	XRV650 Africa Twin	650	1988	1990	**163720349 JTF296.16**	**163721563 JTR300.49**	**163718325 JTC525X1R124RL**	
JTK002780	TRIUMPH	800 Tiger XC	800	2011	2016	**163720575 JTF520.16**	**163721338 JTR2014.50**	**163718346 JTC525Z3-124RL**	
	TRIUMPH	800 Tiger XCX	800	2015	2017	**163720575 JTF520.16**	**163721338 JTR2014.50**	**163718346 JTC525Z3-124RL**	
	TRIUMPH	800 Tiger XR	800	2015	2017	**163720575 JTF520.16**	**163721338 JTR2014.50**	**163718346 JTC525Z3-124RL**	
JTK002790	HONDA	VTR1000 F Fire Storm	1000	1997	2005	**163720392 JTF333.16**	**163721569 JTR302.41**	**163718402 JTC530Z3-102RL**	
JTK002800	YAMAHA	YZF750 SP <<< 530 Chain Conversion	750	1993	1997	**163720682 JTF580.16**	**163722155 JTR859.39**	**163718384 JTC530X1R104RL**	
JTK002810	HONDA	VTR1000 SP-1	1000	2000	2001	**163720392 JTF333.16**	**163721084 JTR1306.40**	**163718403 JTC530Z3-104RL**	
JTK002820	SUZUKI	TL1000 S	1000	1997	2000	**163720554 JTF513.17**	**163721708 JTR499.38**	**163718403 JTC530Z3-104RL**	
JTK002830	SUZUKI	TL1000 R	1000	1998	2002	**163720554 JTF513.17**	**163721709 JTR499.39**	**163718403 JTC530Z3-104RL**	
JTK002840	HONDA	VTR1000 SP-2	1000	2002	2006	**163720392 JTF333.16**	**163721084 JTR1306.40**	**163718404 JTC530Z3-106RL**	
JTK002850	YAMAHA	YZF750 R <<< 530 Chain Conversion	750	1993	1997	**163720682 JTF580.16**	**163722159 JTR859.43**	**163718385 JTC530X1R106RL**	
JTK002860	TRIUMPH	955i Daytona	955	1999	2001	**163720027 JTF1180.18**	**163721332 JTR2011.42**	**163718404 JTC530Z3-106RL**	
	TRIUMPH	955i Daytona	955	2003	2006	**163720027 JTF1180.18**	**163721332 JTR2011.42**	**163718404 JTC530Z3-106RL**	
	TRIUMPH	955i Daytona (Special Edition)	955	2004	2004	**163720027 JTF1180.18**	**163721332 JTR2011.42**	**163718404 JTC530Z3-106RL**	
	TRIUMPH	1050 Speed Triple	1050	2005	2011	**163720027 JTF1180.18**	**163721332 JTR2011.42**	**163718404 JTC530Z3-106RL**	
JTK002870	TRIUMPH	955i Daytona Centennial Edition	955	2002	2002	**163720028 JTF1180.19**	**163721332 JTR2011.42**	**163718404 JTC530Z3-106RL**	
	TRIUMPH	1050 Sprint ST	1050	2005	2011	**163720028 JTF1180.19**	**163721332 JTR2011.42**	**163718404 JTC530Z3-106RL**	
JTK002880	TRIUMPH	955i Daytona (March 2001 >)	955	2001	2002	**163720028 JTF1180.19**	**163721233 JTR1800.44**	**163718404 JTC530Z3-106RL**	
JTK002890	SUZUKI	GSX-R750	750	1992	1995	**163720552 JTF513.15**	**163721956 JTR816.42**	**163718405 JTC530Z3-108RL**	
JTK002900	HONDA	CBR600	600	1991	1996	**163720346 JTF295.15**	**163721571 JTR302.43**	**163718386 JTC530X1R108RL**	
JTK002910	SUZUKI	GSX-R750 SRAD	750	1996	1997	**163720552 JTF513.15**	**163721712 JTR499.43**	**163718405 JTC530Z3-108RL**	
JTK002920	YAMAHA	YZF600R	600	2005	2007	**163720552 JTF513.15**	**163722162 JTR859.47**	**163718386 JTC530X1R108RL**	
	YAMAHA	YZF600R Thunder Cat	600	1996	2003	**163720552 JTF513.15**	**163722162 JTR859.47**	**163718386 JTC530X1R108RL**	
JTK002930	HONDA	CBR900 RR Fire Blade	900	1992	1995	**163720392 JTF333.16**	**163721570 JTR302.42**	**163718405 JTC530Z3-108RL**	

Codice JT *JT Code*	Casa *Mark*	Modello *Model*	CC	Da *From*	A *To*	Pignone Codice RMS - JT *Front Sprocket* *RMS - JT Code*	Corona Codice RMS - JT *Rear Sprocket* *RMS - JT Code*	Catena Codice RMS - JT *Chain* *RMS - JT Code*	Carrier Codice RMS - JT *RMS - JT Code*
JTK002940	HONDA	CBR900 RR Fire Blade	900	2000	2003	**163720392 JTF333.16**	**163721086 JTR1306.42**	**163718405 JTC530Z3-108RL**	
JTK002950	SUZUKI	SV1000 S	1000	2003	2007	**163720554 JTF513.17**	**163721229 JTR1800.40**	**163718405 JTC530Z3-108RL**	
JTK002960	HONDA	VFR800 F1	800	1998	1999	**163720402 JTF339.17**	**163721127 JTR1340.43**	**163718405 JTC530Z3-108RL**	
	HONDA	VFR800 F1 PGM & CBS	800	2000	2001	**163720402 JTF339.17**	**163721127 JTR1340.43**	**163718405 JTC530Z3-108RL**	
JTK002970	TRIUMPH	955 Speed Triple	955	2002	2003	**163720027 JTF1180.18**	**163721332 JTR2011.42**	**163718405 JTC530Z3-108RL**	
JTK002980	TRIUMPH	T509 Speed Triple	900	1997	1998	**163720027 JTF1180.18**	**163721333 JTR2011.43**	**163718405 JTC530Z3-108RL**	
	TRIUMPH	955 Speed Triple	955	1999	2001	**163720027 JTF1180.18**	**163721333 JTR2011.43**	**163718405 JTC530Z3-108RL**	
	TRIUMPH	955 Sprint ST	955	1999	2004	**163720027 JTF1180.18**	**163721333 JTR2011.43**	**163718405 JTC530Z3-108RL**	
	TRIUMPH	T595 Daytona	1000	1997	1998	**163720027 JTF1180.18**	**163721333 JTR2011.43**	**163718405 JTC530Z3-108RL**	
	TRIUMPH	1050 Speed 94	1050	2016	2016	**163720027 JTF1180.18**	**163721333 JTR2011.43**	**163718405 JTC530Z3-108RL**	
	TRIUMPH	1050 Speed 94 R	1050	2016	2016	**163720027 JTF1180.18**	**163721333 JTR2011.43**	**163718405 JTC530Z3-108RL**	
	TRIUMPH	1050 Speed Triple	1050	2012	2015	**163720027 JTF1180.18**	**163721333 JTR2011.43**	**163718405 JTC530Z3-108RL**	
	TRIUMPH	1050 Speed Triple R	1050	2012	2018	**163720027 JTF1180.18**	**163721333 JTR2011.43**	**163718405 JTC530Z3-108RL**	
	TRIUMPH	1050 Speed Triple S	1050	2016	2016	**163720027 JTF1180.18**	**163721333 JTR2011.43**	**163718405 JTC530Z3-108RL**	
JTK002990	TRIUMPH	955 Sprint RS	955	2000	2003	**163720028 JTF1180.19**	**163721232 JTR1800.43**	**163718405 JTC530Z3-108RL**	
JTK003000	SUZUKI	GSF1200 Bandit	1200	1995	2005	**163720552 JTF513.15**	**163721959 JTR816.45**	**163718406 JTC530Z3-110RL**	
	SUZUKI	GSF1200 S Bandit	1200	1995	2005	**163720552 JTF513.15**	**163721959 JTR816.45**	**163718406 JTC530Z3-110RL**	
JTK003010	SUZUKI	GSF 600 Bandit	600	1995	1999	**163720552 JTF513.15**	**163722013 JTR829.47**	**163718387 JTC530X1R110RL**	
	SUZUKI	GSF 600 S Bandit	600	1995	1999	**163720552 JTF513.15**	**163722013 JTR829.47**	**163718387 JTC530X1R110RL**	
JTK003020	YAMAHA	FZS600 Fazer	600	1998	2003	**163720552 JTF513.15**	**163722163 JTR859.48**	**163718387 JTC530X1R110RL**	
	YAMAHA	FZS600 SP Fazer	600	2000	2001	**163720552 JTF513.15**	**163722163 JTR859.48**	**163718387 JTC530X1R110RL**	
JTK003030	KAWASAKI	ZX-9R (ZX900) Ninja	900	1998	2001	**163720571 JTF519.16**	**163721693 JTR488.41**	**163718406 JTC530Z3-110RL**	
JTK003040	HONDA	VFR800 F1 Interceptor VTEC	800	2002	2013	**163720401 JTF339.16**	**163721127 JTR1340.43**	**163718406 JTC530Z3-110RL**	
	HONDA	VFR800 F1 Interceptor VTEC (ABS)	800	2002	2013	**163720401 JTF339.16**	**163721127 JTR1340.43**	**163718406 JTC530Z3-110RL**	
JTK003050	YAMAHA	XJR1300	1300	1998	2002	**163720679 JTF579.17**	**163722154 JTR859.38**	**163718406 JTC530Z3-110RL**	
	YAMAHA	XJR1300 SP	1300	1999	2001	**163720679 JTF579.17**	**163722154 JTR859.38**	**163718406 JTC530Z3-110RL**	
JTK003060	YAMAHA	XJR1300	1300	2007	2015	**163720679 JTF579.17**	**163721657 JTR479.38**	**163718406 JTC530Z3-110RL**	
	YAMAHA	XJR1300 C Racer	1300	2015	2017	**163720679 JTF579.17**	**163721657 JTR479.38**	**163718406 JTC530Z3-110RL**	
JTK003070	SUZUKI	SV1000	1000	2003	2007	**163720554 JTF513.17**	**163721229 JTR1800.40**	**163718406 JTC530Z3-110RL**	
JTK003080	KAWASAKI	ZRX1200	1200	2001	2004	**163720162 JTF1529.17**	**163721694 JTR488.42**	**163718406 JTC530Z3-110RL**	
	KAWASAKI	ZRX1200 R (ZR1200)	1200	2001	2006	**163720162 JTF1529.17**	**163721694 JTR488.42**	**163718406 JTC530Z3-110RL**	
	KAWASAKI	ZRX1200 S (ZR1200S)	1200	2001	2006	**163720162 JTF1529.17**	**163721694 JTR488.42**	**163718406 JTC530Z3-110RL**	
JTK003090	SUZUKI	GSX-R1000	1000	2001	2006	**163720554 JTF513.17**	**163721231 JTR1800.42**	**163718406 JTC530Z3-110RL**	

Codice JT *JT Code*	**Casa** *Mark*	**Modello** *Model*	**CC**	**Da** *From*	**A** *To*	**Pignone Codice RMS - JT** *Front Sprocket RMS - JT Code*	**Corona Codice RMS - JT** *Rear Sprocket RMS - JT Code*	**Catena Codice RMS - JT** *Chain RMS - JT Code*	**Carrier Codice RMS - JT** *RMS - JT Code*
JTK003100	HONDA	CB1100 SF X	1100	2000	2003	**163720402 JTF339.17**	**163721571 JTR302.43**	**163718406 JTC530Z3-110RL**	
JTK003110	HONDA	CBR1100 XX Blackbird	1100	1997	2007	**163720402 JTF339.17**	**163721572 JTR302.44**	**163718406 JTC530Z3-110RL**	
JTK003120	HONDA	CB1100	1100	2013	2013	**163720403 JTF339.18**	**163721568 JTR302.39**	**163718406 JTC530Z3-110RL**	
JTK003130	SUZUKI	GSX1200 Inazuma	1200	1999	2000	**163720552 JTF513.15**	**163721958 JTR816.44**	**163718407 JTC530Z3-112RL**	
JTK003140	SUZUKI	GSF 600 Bandit	600	2000	2004	**163720552 JTF513.15**	**163722013 JTR829.47**	**163718388 JTC530X1R112RL**	
	SUZUKI	GSF 600 S Bandit	600	2000	2004	**163720552 JTF513.15**	**163722013 JTR829.47**	**163718388 JTC530X1R112RL**	
	SUZUKI	GSF650 Bandit	650	2005	2006	**163720552 JTF513.15**	**163722013 JTR829.47**	**163718388 JTC530X1R112RL**	
JTK003150	HONDA	VFR750	750	1990	1998	**163720392 JTF333.16**	**163721127 JTR1340.43**	**163718388 JTC530X1R112RL**	
JTK003160	KAWASAKI	ZZ-R600 (ZX600)	600	1993	2004	**163720571 JTF519.16**	**163721716 JTR499.48**	**163718388 JTC530X1R112RL**	
JTK003190	KAWASAKI	VN800 Drifter	800	1999	2006	**163720572 JTF519.17**	**163721710 JTR499.40**	**163718407 JTC530Z3-112RL**	
JTK003200	SUZUKI	GSX-R1300 R Hayabusa	1300	1999	2007	**163720554 JTF513.17**	**163721710 JTR499.40**	**163718407 JTC530Z3-112RL**	
	SUZUKI	GSX-R1300 R Hayabusa Ltd.	1300	2007	2007	**163720554 JTF513.17**	**163721710 JTR499.40**	**163718407 JTC530Z3-112RL**	
	SUZUKI	GSX-R1300 RZ Hayabusa	1300	2003	2004	**163720554 JTF513.17**	**163721710 JTR499.40**	**163718407 JTC530Z3-112RL**	
JTK003210	KAWASAKI	VN800 Classic	800	1996	2006	**163720572 JTF519.17**	**163721711 JTR499.42**	**163718407 JTC530Z3-112RL**	
JTK003220	SUZUKI	GSX-R1000	1000	2007	2008	**163720554 JTF513.17**	**163721232 JTR1800.43**	**163718407 JTC530Z3-112RL**	
JTK003230	HONDA	CBR1000 RR Fireblade	1000	2004	2005	**163720392 JTF333.16**	**163721084 JTR1306.40**	**163718408 JTC530Z3-114RL**	
JTK003250	HONDA	CBR1000 RR Fireblade	1000	2006	2007	**163720392 JTF333.16**	**163721086 JTR1306.42**	**163718408 JTC530Z3-114RL**	
JTK003260	HONDA	CB900 F Hornet	900	2002	2006	**163720392 JTF333.16**	**163721571 JTR302.43**	**163718408 JTC530Z3-114RL**	
JTK003270	YAMAHA	YZF R1	1000	1998	2003	**163720678 JTF579.16**	**163721661 JTR479.43**	**163718408 JTC530Z3-114RL**	
JTK003280	YAMAHA	YZF-R6 50th Anniversary Edition >>> 530 Chain Conversion	600	2012	2012	**163720682 JTF580.16**	**163721663 JTR479.45**	**163718389 JTC530X1R114RL**	
JTK003290	YAMAHA	MT-01	1670	2005	2011	**163720679 JTF579.17**	**163721658 JTR479.39**	**163718408 JTC530Z3-114RL**	
JTK003300	KAWASAKI	VN800 Vulcan	800	1997	2005	**163720572 JTF519.17**	**163721711 JTR499.42**	**163718408 JTC530Z3-114RL**	
JTK003310	SUZUKI	GSX-R1000	1000	2009	2016	**163720459 JTF423.17**	**163721660 JTR479.42**	**163718408 JTC530Z3-114RL**	
JTK003320	HONDA	CB1300 F	1300	2003	2009	**163720403 JTF339.18**	**163721568 JTR302.39**	**163718408 JTC530Z3-114RL**	
	HONDA	CB1300 S	1300	2006	2009	**163720403 JTF339.18**	**163721568 JTR302.39**	**163718408 JTC530Z3-114RL**	
	HONDA	CB1300 S/SA	1300	2010	2013	**163720403 JTF339.18**	**163721568 JTR302.39**	**163718408 JTC530Z3-114RL**	
JTK003330	TRIUMPH	1050 Tiger	1050	2007	2014	**163720027 JTF1180.18**	**163721233 JTR1800.44**	**163718408 JTC530Z3-114RL**	
	TRIUMPH	1050 Tiger SE	1050	2009	2014	**163720027 JTF1180.18**	**163721233 JTR1800.44**	**163718408 JTC530Z3-114RL**	
JTK003350	TRIUMPH	955 Tiger	955	2001	2004	**163720027 JTF1180.18**	**163721328 JTR2010.46**	**163718408 JTC530Z3-114RL**	
JTK003360	TRIUMPH	955 Tiger	955	2005	2006	**163720027 JTF1180.18**	**163721235 JTR1800.46**	**163718408 JTC530Z3-114RL**	
JTK003370	SUZUKI	GSX750 F	750	1999	2006	**163720552 JTF513.15**	**163722011 JTR829.45**	**163718390 JTC530X1R116RL**	
JTK003380	SUZUKI	GSF1200 Bandit	1200	2006	2006	**163720552 JTF513.15**	**163721234 JTR1800.45**	**163718409 JTC530Z3-116RL**	

Codice JT *JT Code*	Casa *Mark*	Modello *Model*	CC	Da *From*	A *To*	Pignone Codice RMS - JT *Front Sprocket* *RMS - JT Code*	Corona Codice RMS - JT *Rear Sprocket* *RMS - JT Code*	Catena Codice RMS - JT *Chain* *RMS - JT Code*	Carrier Codice RMS - JT *RMS - JT Code*
JTK003390	SUZUKI	GSF650 SA Bandit (ABS)	650	2005	2006	**163720552 JTF513.15**	**163722013 JTR829.47**	**163718390 JTC530X1R116RL**	
JTK003400	SUZUKI	VZ800 Marauder	800	1997	2004	**163720552 JTF513.15**	**163722014 JTR829.48**	**163718409 JTC530Z3-116RL**	
JTK003410	HONDA	CBR1000 RR Fireblade	1000	2008	2016	**163720392 JTF333.16**	**163721086 JTR1306.42**	**163718409 JTC530Z3-116RL**	
JTK003420	HONDA	VFR800 X Crossrunner	800	2011	2014	**163720401 JTF339.16**	**163721127 JTR1340.43**	**163718409 JTC530Z3-116RL**	
JTK003430	HONDA	CB1000 R/RA (ABS)	1000	2008	2016	**163720392 JTF333.16**	**163721128 JTR1340.44**	**163718409 JTC530Z3-116RL**	
JTK003440	YAMAHA	FZS1000 Fazer	1000	2001	2005	**163720678 JTF579.16**	**163721662 JTR479.44**	**163718409 JTC530Z3-116RL**	
JTK003450	YAMAHA	YZF-R6 <<< 530 Chain Conversion	600	1999	2002	**163720682 JTF580.16**	**163721298 JTR1871.48**	**163718390 JTC530X1R116RL**	
JTK003460	YAMAHA	YZF-R6 <<< 530 Chain Conversion	600	2003	2005	**163720682 JTF580.16**	**163721666 JTR479.48**	**163718390 JTC530X1R116RL**	
	YAMAHA	YZF-R6 S <<< 530 Chain Conversion	600	2006	2010	**163720682 JTF580.16**	**163721666 JTR479.48**	**163718390 JTC530X1R116RL**	
JTK003470	KAWASAKI	ZX-14 (ZX1400) Ninja	1400	2006	2011	**163720563 JTF517.17**	**163721192 JTR1493.41**	**163718409 JTC530Z3-116RL**	
	KAWASAKI	ZZR1400	1400	2006	2010	**163720563 JTF517.17**	**163721192 JTR1493.41**	**163718409 JTC530Z3-116RL**	
JTK003480	YAMAHA	YZF R1	1000	2004	2005	**163720679 JTF579.17**	**163721663 JTR479.45**	**163718409 JTC530Z3-116RL**	
JTK003490	SUZUKI	GSX1400	1400	2001	2008	**163720555 JTF513.18**	**163721227 JTR1797.41**	**163718409 JTC530Z3-116RL**	
JTK003500	TRIUMPH	1050 Sprint GT / SE	1050	2011	2018	**163720028 JTF1180.19**	**163721332 JTR2011.42**	**163718409 JTC530Z3-116RL**	
JTK003510	SUZUKI	GSX750 F	750	1989	1998	**163720552 JTF513.15**	**163722013 JTR829.47**	**163718391 JTC530X1R118RL**	
JTK003520	HONDA	VF750 C V45 Magna	750	1994	2004	**163720392 JTF333.16**	**163721119 JTR1334.40**	**163718391 JTC530X1R118RL**	
	HONDA	VF750 CD/CD2 V45 Magna Deluxe	750	1995	2004	**163720392 JTF333.16**	**163721119 JTR1334.40**	**163718391 JTC530X1R118RL**	
JTK003530	YAMAHA	FZ6 Fazer	600	2004	2008	**163720682 JTF580.16**	**163721664 JTR479.46**	**163718391 JTC530X1R118RL**	
	YAMAHA	FZ6 Fazer S2 ABS	600	2007	2009	**163720682 JTF580.16**	**163721664 JTR479.46**	**163718391 JTC530X1R118RL**	
	YAMAHA	FZ6 S2	600	2007	2009	**163720682 JTF580.16**	**163721664 JTR479.46**	**163718391 JTC530X1R118RL**	
JTK003540	KAWASAKI	ZZR1400 (ZX1400) Performance Sport ABS	1400	2015	2018	**163720563 JTF517.17**	**163721192 JTR1493.41**	**163718410 JTC530Z3-118RL**	
	KAWASAKI	ZZR1400 Performance	1400	2011	2012	**163720563 JTF517.17**	**163721192 JTR1493.41**	**163718410 JTC530Z3-118RL**	
JTK003550	KAWASAKI	ZX-14R (ZX1400) Ninja	1400	2012	2014	**163720563 JTF517.17**	**163721193 JTR1493.42**	**163718410 JTC530Z3-118RL**	
	KAWASAKI	ZX-14R (ZX1400) Ninja ABS	1400	2013	2018	**163720563 JTF517.17**	**163721193 JTR1493.42**	**163718410 JTC530Z3-118RL**	
	KAWASAKI	ZX-14R (ZX1400) Ninja ABS SE	1400	2016	2018	**163720563 JTF517.17**	**163721193 JTR1493.42**	**163718410 JTC530Z3-118RL**	
	KAWASAKI	ZZR1400	1400	2011	2014	**163720563 JTF517.17**	**163721193 JTR1493.42**	**163718410 JTC530Z3-118RL**	
	KAWASAKI	ZZR1400 (ABS)	1400	2011	2018	**163720563 JTF517.17**	**163721193 JTR1493.42**	**163718410 JTC530Z3-118RL**	
	KAWASAKI	ZZR1400 Special Edition	1400	2013	2013	**163720563 JTF517.17**	**163721193 JTR1493.42**	**163718410 JTC530Z3-118RL**	
JTK003560	YAMAHA	YZF-R7	750	1999	2001	**163720683 JTF580.17**	**163721661 JTR479.43**	**163718410 JTC530Z3-118RL**	
JTK003570	YAMAHA	YZF R1	1000	2006	2008	**163720679 JTF579.17**	**163721663 JTR479.45**	**163718410 JTC530Z3-118RL**	
JTK003580	SUZUKI	GSF1250 A Bandit (ABS)	1250	2010	2012	**163720555 JTF513.18**	**163721232 JTR1800.43**	**163718410 JTC530Z3-118RL**	
	SUZUKI	GSF1250 Bandit (ABS)	1250	2007	2009	**163720555 JTF513.18**	**163721232 JTR1800.43**	**163718410 JTC530Z3-118RL**	
	SUZUKI	GSF1250 S Bandit (ABS)	1250	2007	2016	**163720555 JTF513.18**	**163721232 JTR1800.43**	**163718410 JTC530Z3-118RL**	

Codice JT *JT Code*	**Casa** *Mark*	**Modello** *Model*	**CC**	**Da** *From*	**A** *To*	**Pignone Codice RMS - JT** *Front Sprocket RMS - JT Code*	**Corona Codice RMS - JT** *Rear Sprocket RMS - JT Code*	**Catena Codice RMS - JT** *Chain RMS - JT Code*	**Carrier Codice RMS - JT** *RMS - JT Code*
	SUZUKI	GSF1250 SA Bandit (ABS)	1250	2007	2016	**163720555 JTF513.18**	**163721232 JTR1800.43**	**163718410 JTC530Z3-118RL**	
	SUZUKI	GSF1250 SA Bandit Traveller(ABS)	1250	2010	2010	**163720555 JTF513.18**	**163721232 JTR1800.43**	**163718410 JTC530Z3-118RL**	
JTK003590	SUZUKI	GSX1300 BK BK B-King	1300	2012	2012	**163720460 JTF423.18**	**163721232 JTR1800.43**	**163718410 JTC530Z3-118RL**	
	SUZUKI	GSX1300 BK B-King	1300	2008	2011	**163720460 JTF423.18**	**163721232 JTR1800.43**	**163718410 JTC530Z3-118RL**	
	SUZUKI	GSX-R1300 R Hayabusa	1300	2008	2018	**163720460 JTF423.18**	**163721232 JTR1800.43**	**163718410 JTC530Z3-118RL**	
	SUZUKI	GSX-R1300 RZ Hayabusa	1300	2016	2016	**163720460 JTF423.18**	**163721232 JTR1800.43**	**163718410 JTC530Z3-118RL**	
JTK003600	HONDA	CBF1000 F/FA	1000	2006	2010	**163720392 JTF333.16**	**163721571 JTR302.43**	**163718411 JTC530Z3-120RL**	
JTK003610	YAMAHA	YZF R1	1000	2009	2014	**163720679 JTF579.17**	**163721174 JTR1479.47**	**163718411 JTC530Z3-120RL**	
	YAMAHA	YZF R1 World GP 50th Anniversary Edition	1000	2012	2012	**163720679 JTF579.17**	**163721174 JTR1479.47**	**163718411 JTC530Z3-120RL**	
JTK003620	SUZUKI	GSX1250 F / FA	1250	2010	2016	**163720555 JTF513.18**	**163721232 JTR1800.43**	**163718411 JTC530Z3-120RL**	
	SUZUKI	GSX1250 FA ST	1250	2011	2011	**163720555 JTF513.18**	**163721232 JTR1800.43**	**163718411 JTC530Z3-120RL**	
	SUZUKI	GSX1250 FA Z	1250	2016	2016	**163720555 JTF513.18**	**163721232 JTR1800.43**	**163718411 JTC530Z3-120RL**	
JTK003630	YAMAHA	FZ1 Fazer (ABS)	1000	2015	2015	**163720679 JTF579.17**	**163721663 JTR479.45**	**163718412 JTC530Z3-122RL**	
	YAMAHA	FZ1 N,NA	1000	2006	2014	**163720679 JTF579.17**	**163721663 JTR479.45**	**163718412 JTC530Z3-122RL**	
	YAMAHA	FZ1 S,SA,SZ Fazer ABS	1000	2006	2014	**163720679 JTF579.17**	**163721663 JTR479.45**	**163718412 JTC530Z3-122RL**	
JTK003640	HONDA	CB X	1300	1997	1999	**163720403 JTF339.18**	**163721569 JTR302.41**	**163718412 JTC530Z3-122RL**	
JTK003660	KTM	125 Duke	125	2014	2018	**163720240 JTF1903.14**	**163722575 JTR890.45ZBK**	**163718186 JTC520X1RNN118DL**	
JTK003670	HONDA	CRF	250	2018	2018	**163720838 JTF1344.13SC**	**163721351 JTR210.49**	**163718190 JTC520X1R116DL**	
JTK003680	YAMAHA	YZ F	250	2014	2018	**163720214 JTF1590.13SC**	**163721449 JTR251.50**	**163718179 JTC520X1RGB114DL**	
JTK003690	HONDA	CRF R	450	2004	2018	**163720316 JTF284.13SC**	**163721350 JTR210.48**	**163718163 JTC520HDSNN116SL**	
JTK003700	YAMAHA	YZ	450	2007	2014	**163720630 JTF565.13SC**	**163721448 JTR251.49**	**163718162 JTC520HDSNN114SL**	
JTK003710	HONDA	CRF	250	2011	2017	**163720079 JTF1323.13SC**	**163721351 JTR210.49**	**163718190 JTC520X1R116DL**	
JTK003720	HONDA	CR	125	2004	2007	**163720079 JTF1323.13SC**	**163721354 JTR210.52**	**163718139 JTC520HDR116SL**	
JTK003730	APRILIA	RS Extrema	125	1993	2003	**163720411 JTF394.17**	**163721786 JTR701.41**	**163718251 JTC520X1R2-106DL**	
JTK003740	APRILIA	RS4	125	2011	2016	**163720851 JTF712.13**	**163721446 JTR25.60**	**163718500 JTC428HPOGB136SL**	
	APRILIA	RS4 Replica	125	2013	2017	**163720851 JTF712.13**	**163721446 JTR25.60**	**163718500 JTC428HPOGB136SL**	
JTK003750	APRILIA	Dorsoduro / ABS	750	2007	2016	**163720814 JTF709.16**	**163721795 JTR702.46**	**163718340 JTC525Z3-112RL**	
	APRILIA	Dorsoduro Factory / ABS	750	2010	2016	**163720814 JTF709.16**	**163721795 JTR702.46**	**163718340 JTC525Z3-112RL**	
JTK003760	APRILIA	SL Shiver / ABS	750	2007	2016	**163720814 JTF709.16**	**163721793 JTR702.44**	**163718338 JTC525Z3-108RL**	
	APRILIA	SL Shiver GT / ABS	750	2007	2016	**163720814 JTF709.16**	**163721793 JTR702.44**	**163718338 JTC525Z3-108RL**	
JTK003770	APRILIA	RSV4 Factory	1000	2009	2014	**163720693 JTF704.16**	**163722616 JTR713.40**	**163718338 JTC525Z3-108RL**	
	APRILIA	RSV4 R / APRC	1000	2011	2015	**163720693 JTF704.16**	**163722616 JTR713.40**	**163718338 JTC525Z3-108RL**	
JTK003780	APRILIA	RSV4 Factory APRC	1000	2011	2014	**163720693 JTF704.16**	**163722618 JTR713.42**	**163718338 JTC525Z3-108RL**	

Codice JT *JT Code*	Casa *Mark*	Modello *Model*	CC	Da *From*	A *To*	Pignone Codice RMS - JT *Front Sprocket* *RMS - JT Code*	Corona Codice RMS - JT *Rear Sprocket* *RMS - JT Code*	Catena Codice RMS - JT *Chain* *RMS - JT Code*	Carrier Codice RMS - JT *RMS - JT Code*
	APRILIA	RSV4 Factory APRC SE	1000	2011	2014	**163720693 JTF704.16**	**163722618 JTR713.42**	**163718338 JTC525Z3-108RL**	
	APRILIA	Tuono V4 R / APRC	1000	2012	2016	**163720693 JTF704.16**	**163722618 JTR713.42**	**163718338 JTC525Z3-108RL**	
JTK003790	APRILIA	RSV4 Factory Racing LE	1000	2017	2017	**163720693 JTF704.16**	**163722617 JTR713.41**	**163718339 JTC525Z3-110RL**	
	APRILIA	RSV4 RF	1000	2015	2017	**163720693 JTF704.16**	**163722617 JTR713.41**	**163718339 JTC525Z3-110RL**	
	APRILIA	RSV4 RR	1000	2016	2017	**163720693 JTF704.16**	**163722617 JTR713.41**	**163718339 JTC525Z3-110RL**	
JTK003800	BMW	G650 GS	650	2011	2015	**163720415 JTF402.16**	**163721753 JTR5.47**	**163718254 JTC520X1R2-112DL**	
JTK003810	BMW	S1000 XR	1000	2014	2018	**163720423 JTF404.17**	**163721847 JTR7.45**	**163718528 JTC525Z3-128RL**	
JTK003820	DERBI	GPR Nude	50	2004	2005	**163720820 JTF1129.12**	**163721034 JTR1133.53**	**163718038 JTC420HDR132SL**	
	DERBI	GPR Racing	50	2004	2005	**163720820 JTF1129.12**	**163721034 JTR1133.53**	**163718038 JTC420HDR132SL**	
JTK003830	DERBI	Senda R X-Race	50	2004	2005	**163720833 JTF1129.13**	**163721026 JTR1131.53**	**163718037 JTC420HDR130SL**	
JTK003840	DERBI	Cross City	125	2007	2014	**163720275 JTF259.15**	**163721037 JTR1134.50**	**163718499 JTC428HPOGB134SL**	
JTK003850	DUCATI	600 Monster	600	1994	1994	**163720719 JTF736.15**	**163721810 JTR735.38**	**163718248 JTC520X1R2-100DL**	
JTK003860	DUCATI	695 Monster	695	2007	2008	**163720719 JTF736.15**	**163721814 JTR735.42**	**163718249 JTC520X1R2-102DL**	
JTK003870	DUCATI	750 Monster	750	1996	1997	**163720719 JTF736.15**	**163721810 JTR735.38**	**163718247 JTC520X1R2-098DL**	
JTK003880	DUCATI	750 Sport	750	2002	2002	**163720719 JTF736.15**	**163721812 JTR735.40**	**163718247 JTC520X1R2-098DL**	
JTK003890	DUCATI	797 Monster	797	2017	2018	**163720719 JTF736.15**	**163722605 JTR746.46**	**163718336 JTC525Z3-104RL**	
JTK003900	DUCATI	800 Scrambler Cafe Racer	800	2018	2018	**163720719 JTF736.15**	**163722605 JTR746.46**	**163718272 JTC520Z3-104RL**	
	DUCATI	800 Scrambler Classic	800	2015	2018	**163720719 JTF736.15**	**163722605 JTR746.46**	**163718272 JTC520Z3-104RL**	
	DUCATI	800 Scrambler Desert Sled	800	2018	2018	**163720719 JTF736.15**	**163722605 JTR746.46**	**163718272 JTC520Z3-104RL**	
	DUCATI	800 Scrambler Flat Track Pro	800	2015	2016	**163720719 JTF736.15**	**163722605 JTR746.46**	**163718272 JTC520Z3-104RL**	
	DUCATI	800 Scrambler Full Throttle	800	2015	2018	**163720719 JTF736.15**	**163722605 JTR746.46**	**163718272 JTC520Z3-104RL**	
	DUCATI	800 Scrambler Icon	800	2015	2018	**163720719 JTF736.15**	**163722605 JTR746.46**	**163718272 JTC520Z3-104RL**	
	DUCATI	800 Scrambler Icon	800	2018	2018	**163720719 JTF736.15**	**163722605 JTR746.46**	**163718272 JTC520Z3-104RL**	
	DUCATI	800 Scrambler Italia Independent	800	2016	2016	**163720719 JTF736.15**	**163722605 JTR746.46**	**163718272 JTC520Z3-104RL**	
	DUCATI	800 Scrambler Mach 2	800	2017	2018	**163720719 JTF736.15**	**163722605 JTR746.46**	**163718272 JTC520Z3-104RL**	
	DUCATI	800 Scrambler Urban Enduro	800	2015	2016	**163720719 JTF736.15**	**163722605 JTR746.46**	**163718272 JTC520Z3-104RL**	
JTK003910	DUCATI	820 Hypermotard	820	2013	2014	**163720728 JTF741.15**	**163722611 JTR752.45**	**163718338 JTC525Z3-108RL**	**163722217 JTA750B**
	DUCATI	820 Hypermotard SP	820	2013	2014	**163720728 JTF741.15**	**163722611 JTR752.45**	**163718338 JTC525Z3-108RL**	**163722217 JTA750B**
	DUCATI	820 Hyperstrada	820	2013	2014	**163720728 JTF741.15**	**163722611 JTR752.45**	**163718338 JTC525Z3-108RL**	**163722217 JTA750B**
	DUCATI	821 Hypermotard	821	2014	2016	**163720728 JTF741.15**	**163722611 JTR752.45**	**163718338 JTC525Z3-108RL**	**163722217 JTA750B**
	DUCATI	821 Hypermotard SP	821	2014	2016	**163720728 JTF741.15**	**163722611 JTR752.45**	**163718338 JTC525Z3-108RL**	**163722217 JTA750B**
	DUCATI	821 Hypermstrada	821	2014	2016	**163720728 JTF741.15**	**163722611 JTR752.45**	**163718338 JTC525Z3-108RL**	**163722217 JTA750B**
JTK003920	DUCATI	899 Panigale	899	2014	2015	**163720817 JTF748.15**	**163722604 JTR746.44**	**163718273 JTC520Z3-106RL**	

Codice JT *JT Code*	**Casa** *Mark*	**Modello** *Model*	**CC**	**Da** *From*	**A** *To*	**Pignone Codice RMS - JT** *Front Sprocket RMS - JT Code*	**Corona Codice RMS - JT** *Rear Sprocket RMS - JT Code*	**Catena Codice RMS - JT** *Chain RMS - JT Code*	**Carrier Codice RMS - JT** *RMS - JT Code*
JTK003930	DUCATI	939 Hypermotard	939	2016	2017	**163720728 JTF741.15**	**163722636 JTR752.43**	**163718337 JTC525Z3-106RL**	**163722217 JTA750B**
	DUCATI	939 Hypermotard	939	2018	2018	**163720728 JTF741.15**	**163722636 JTR752.43**	**163718337 JTC525Z3-106RL**	**163722217 JTA750B**
	DUCATI	939 Hypermotard SP	939	2016	2017	**163720728 JTF741.15**	**163722636 JTR752.43**	**163718337 JTC525Z3-106RL**	**163722217 JTA750B**
	DUCATI	939 Hypermotard SP	939	2018	2018	**163720728 JTF741.15**	**163722636 JTR752.43**	**163718337 JTC525Z3-106RL**	**163722217 JTA750B**
	DUCATI	939 Hyperstrada	939	2016	2018	**163720728 JTF741.15**	**163722636 JTR752.43**	**163718337 JTC525Z3-106RL**	**163722217 JTA750B**
JTK003940	DUCATI	950 Multistrada	950	2017	2018	**163720725 JTF740.15**	**163722641 JTR765.43**	**163718341 JTC525Z3-114RL**	
JTK003950	DUCATI	959 Panigale	959	2016	2017	**163720817 JTF748.15**	**163722603 JTR746.43**	**163718273 JTC520Z3-106RL**	
	DUCATI	959 Panigale	959	2018	2018	**163720817 JTF748.15**	**163722603 JTR746.43**	**163718273 JTC520Z3-106RL**	
	DUCATI	959 Panigale Corse	959	2018	2018	**163720817 JTF748.15**	**163722603 JTR746.43**	**163718273 JTC520Z3-106RL**	
JTK003960	DUCATI	996 SPS	996	1999	2001	**163720725 JTF740.15**	**163722349 JTA752.38**	**163718335 JTC525Z3-102RL**	
JTK003970	DUCATI	1103 Panigale V4	1103	2018	2018	**163720852 JTF749.16**	**163722637 JTR761.41**	**163718341 JTC525Z3-114RL**	**163722218 JTA760B**
	DUCATI	1103 Panigale V4 Speciale	1103	2018	2018	**163720852 JTF749.16**	**163722637 JTR761.41**	**163718341 JTC525Z3-114RL**	**163722218 JTA760B**
	DUCATI	1103 Panigale V4S	1103	2018	2018	**163720852 JTF749.16**	**163722637 JTR761.41**	**163718341 JTC525Z3-114RL**	**163722218 JTA760B**
JTK003980	DUCATI	1198 Diavel	1198	2011	2018	**163720728 JTF741.15**	**163722612 JTR761.43**	**163718343 JTC525Z3-118RL**	**163722218 JTA760B**
	DUCATI	1198 Diavel AMG	1198	2012	2012	**163720728 JTF741.15**	**163722612 JTR761.43**	**163718343 JTC525Z3-118RL**	**163722218 JTA760B**
	DUCATI	1198 Diavel Carbon	1198	2011	2018	**163720728 JTF741.15**	**163722612 JTR761.43**	**163718343 JTC525Z3-118RL**	**163722218 JTA760B**
	DUCATI	1198 Diavel Cromo	1198	2012	2014	**163720728 JTF741.15**	**163722612 JTR761.43**	**163718343 JTC525Z3-118RL**	**163722218 JTA760B**
	DUCATI	1198 Diavel Dark	1198	2013	2015	**163720728 JTF741.15**	**163722612 JTR761.43**	**163718343 JTC525Z3-118RL**	**163722218 JTA760B**
	DUCATI	1198 Diavel Strada	1198	2013	2015	**163720728 JTF741.15**	**163722612 JTR761.43**	**163718343 JTC525Z3-118RL**	**163722218 JTA760B**
	DUCATI	1198 Diavel Titanium	1198	2016	2016	**163720728 JTF741.15**	**163722612 JTR761.43**	**163718343 JTC525Z3-118RL**	**163722218 JTA760B**
JTK003990	DUCATI	1199 Panigale	1199	2012	2015	**163720818 JTF749.15**	**163721835 JTR761.39**	**163718336 JTC525Z3-104RL**	**163722219 JTA770B**
	DUCATI	1199 Panigale S	1199	2012	2015	**163720818 JTF749.15**	**163721835 JTR761.39**	**163718336 JTC525Z3-104RL**	**163722219 JTA770B**
	DUCATI	1199 Panigale S Tricolore	1199	2012	2013	**163720818 JTF749.15**	**163721835 JTR761.39**	**163718336 JTC525Z3-104RL**	**163722219 JTA770B**
	DUCATI	1299 Panigale	1299	2015	2017	**163720818 JTF749.15**	**163721835 JTR761.39**	**163718336 JTC525Z3-104RL**	**163722219 JTA770B**
	DUCATI	1299 Panigale R Final Edition	1299	2018	2018	**163720818 JTF749.15**	**163721835 JTR761.39**	**163718336 JTC525Z3-104RL**	**163722219 JTA770B**
	DUCATI	1299 Panigale S	1299	2015	2017	**163720818 JTF749.15**	**163721835 JTR761.39**	**163718336 JTC525Z3-104RL**	**163722219 JTA770B**
JTK004000	DUCATI	1199 Panigale R	1199	2013	2017	**163720818 JTF749.15**	**163722637 JTR761.41**	**163718337 JTC525Z3-106RL**	**163722219 JTA770B**
	DUCATI	1199 Superleggeria	1199	2015	2015	**163720818 JTF749.15**	**163722637 JTR761.41**	**163718337 JTC525Z3-106RL**	**163722219 JTA770B**
JTK004010	DUCATI	1200 Monster	1200	2014	2018	**163720728 JTF741.15**	**163722637 JTR761.41**	**163718338 JTC525Z3-108RL**	**163722219 JTA770B**
	DUCATI	1200 R Monster	1200	2016	2018	**163720728 JTF741.15**	**163722637 JTR761.41**	**163718338 JTC525Z3-108RL**	**163722219 JTA770B**
	DUCATI	1200 S Monster	1200	2014	2018	**163720728 JTF741.15**	**163722637 JTR761.41**	**163718338 JTC525Z3-108RL**	**163722219 JTA770B**
	DUCATI	1200 S Monster Stripe	1200	2016	2016	**163720728 JTF741.15**	**163722637 JTR761.41**	**163718338 JTC525Z3-108RL**	**163722219 JTA770B**
JTK004020	DUCATI	1200 Multistrada	1200	2010	2017	**163720815 JTF743.15**	**163722613 JTR763.40**	**163718405 JTC530Z3-108RL**	

Codice JT *JT Code*	Casa *Mark*	Modello *Model*	CC	Da *From*	A *To*	Pignone Codice RMS - JT *Front Sprocket* *RMS - JT Code*	Corona Codice RMS - JT *Rear Sprocket* *RMS - JT Code*	Catena Codice RMS - JT *Chain* *RMS - JT Code*	Carrier Codice RMS - JT *RMS - JT Code*
	DUCATI	1200 Multistrada DVT	1200	2016	2016	**163720815 JTF743.15**	**163722613 JTR763.40**	**163718405 JTC530Z3-108RL**	
	DUCATI	1200 Multistrada DVT Sport Pack	1200	2016	2016	**163720815 JTF743.15**	**163722613 JTR763.40**	**163718405 JTC530Z3-108RL**	
	DUCATI	1200 Multistrada DVT Urban Pack	1200	2016	2016	**163720815 JTF743.15**	**163722613 JTR763.40**	**163718405 JTC530Z3-108RL**	
	DUCATI	1200 S Multistrada	1200	2010	2017	**163720815 JTF743.15**	**163722613 JTR763.40**	**163718405 JTC530Z3-108RL**	
	DUCATI	1200 S Multistrada D-Air	1200	2017	2017	**163720815 JTF743.15**	**163722613 JTR763.40**	**163718405 JTC530Z3-108RL**	
	DUCATI	1200 S Multistrada DVT	1200	2016	2016	**163720815 JTF743.15**	**163722613 JTR763.40**	**163718405 JTC530Z3-108RL**	
	DUCATI	1200 S Multistrada DVT Urban Pack	1200	2016	2016	**163720815 JTF743.15**	**163722613 JTR763.40**	**163718405 JTC530Z3-108RL**	
	DUCATI	1200 S Multistrada GT	1200	2010	2016	**163720815 JTF743.15**	**163722613 JTR763.40**	**163718405 JTC530Z3-108RL**	
	DUCATI	1200 S Multistrada Pikes Peak	1200	2012	2017	**163720815 JTF743.15**	**163722613 JTR763.40**	**163718405 JTC530Z3-108RL**	
	DUCATI	1200 S Multistrada Touring	1200	2010	2017	**163720815 JTF743.15**	**163722613 JTR763.40**	**163718405 JTC530Z3-108RL**	
	DUCATI	1200 S Multistrada Touring D-Air	1200	2015	2017	**163720815 JTF743.15**	**163722613 JTR763.40**	**163718405 JTC530Z3-108RL**	
	DUCATI	1200 S Multistrada Touring D-Air DVT	1200	2016	2016	**163720815 JTF743.15**	**163722613 JTR763.40**	**163718405 JTC530Z3-108RL**	
JTK004030	HONDA	CB125 F (GLR125)	125	2015	2017	**163720048 JTF1264.15**	**163722596 JTR1221.45**	**163718542 JTC428HPOGB122SL**	
JTK004040	HONDA	CBR500 R/RA	500	2013	2018	**163720111 JTF1381.15**	**163721104 JTR1316.41**	**163718388 JTC530X1R112RL**	
JTK004050	HONDA	NX650 Dominator	650	1995	2001	**163720357 JTF308.15**	**163722601 JTR305.46**	**163718253 JTC520X1R2-110DL**	
JTK004060	HONDA	CTX700 DCT	700	2014	2018	**163720109 JTF1373.16**	**163722621 JTR1316.39**	**163718255 JTC520X1R2-114DL**	
JTK004070	HONDA	CTX700 N DCT	700	2014	2018	**163720109 JTF1373.16**	**163722622 JTR1316.43**	**163718255 JTC520X1R2-114DL**	
	HONDA	NC700 S/SA	700	2012	2013	**163720109 JTF1373.16**	**163722622 JTR1316.43**	**163718255 JTC520X1R2-114DL**	
	HONDA	NC700 X/XA	700	2012	2013	**163720109 JTF1373.16**	**163722622 JTR1316.43**	**163718255 JTC520X1R2-114DL**	
	HONDA	NC700 X/XA	700	2014	2015	**163720109 JTF1373.16**	**163722622 JTR1316.43**	**163718255 JTC520X1R2-114DL**	
JTK004080	HONDA	750 Adv	750	2017	2017	**163720110 JTF1373.17**	**163722620 JTR1316.38**	**163718257 JTC520X1R2-118DL**	
	HONDA	750 X-Adv	750	2017	2018	**163720110 JTF1373.17**	**163722620 JTR1316.38**	**163718257 JTC520X1R2-118DL**	
JTK004090	HONDA	NC750 S DCT	750	2014	2016	**163720110 JTF1373.17**	**163722621 JTR1316.39**	**163718254 JTC520X1R2-112DL**	
	HONDA	NC750 XD	750	2014	2017	**163720110 JTF1373.17**	**163722621 JTR1316.39**	**163718254 JTC520X1R2-112DL**	
	HONDA	NC750 XD DCT	750	2018	2018	**163720110 JTF1373.17**	**163722621 JTR1316.39**	**163718254 JTC520X1R2-112DL**	
JTK004100	HONDA	NC750 S/SA ABS	750	2014	2018	**163720110 JTF1373.17**	**163722622 JTR1316.43**	**163718255 JTC520X1R2-114DL**	
	HONDA	NC750 X/XA	750	2014	2017	**163720110 JTF1373.17**	**163722622 JTR1316.43**	**163718255 JTC520X1R2-114DL**	
	HONDA	NC750 XA ABS	750	2018	2018	**163720110 JTF1373.17**	**163722622 JTR1316.43**	**163718255 JTC520X1R2-114DL**	
JTK004110	HONDA	VFR800 F Interceptor VTEC (ABS)	800	2014	2017	**163720093 JTF1332.16**	**163721130 JTR1346.43**	**163718339 JTC525Z3-110RL**	
	HONDA	VFR800 X Crossrunner	800	2015	2017	**163720093 JTF1332.16**	**163721130 JTR1346.43**	**163718339 JTC525Z3-110RL**	
JTK004120	HONDA	CBF1000	1000	2011	2015	**163720392 JTF333.16**	**163721569 JTR302.41**	**163718411 JTC530Z3-120RL**	
	HONDA	CBF1000 F	1000	2011	2015	**163720392 JTF333.16**	**163721569 JTR302.41**	**163718411 JTC530Z3-120RL**	
	HONDA	CBF1000 F	1000	2016	2016	**163720392 JTF333.16**	**163721569 JTR302.41**	**163718411 JTC530Z3-120RL**	

Codice JT *JT Code*	**Casa** *Mark*	**Modello** *Model*	**CC**	**Da** *From*	**A** *To*	**Pignone** **Codice RMS - JT** *Front Sprocket* *RMS - JT Code*	**Corona** **Codice RMS - JT** *Rear Sprocket* *RMS - JT Code*	**Catena** **Codice RMS - JT** *Chain* *RMS - JT Code*	**Carrier** **Codice RMS - JT** *RMS - JT Code*
	HONDA	CBF1000 FS (ABS)	1000	2010	2010	**163720392** **JTF333.16**	**163721569** **JTR302.41**	**163718411** **JTC530Z3-120RL**	
JTK004130	HONDA	CBR1000 RR Fireblade	1000	2017	2017	**163720104** **JTF1370.16**	**163722623** **JTR1317.43**	**163718342** **JTC525Z3-116RL**	
	HONDA	CBR1000 RR Fireblade	1000	2018	2018	**163720104** **JTF1370.16**	**163722623** **JTR1317.43**	**163718342** **JTC525Z3-116RL**	
	HONDA	CBR1000 SP	1000	2017	2018	**163720104** **JTF1370.16**	**163722623** **JTR1317.43**	**163718342** **JTC525Z3-116RL**	
	HONDA	CBR1000 SP2	1000	2017	2018	**163720104** **JTF1370.16**	**163722623** **JTR1317.43**	**163718342** **JTC525Z3-116RL**	
JTK004140	HONDA	CRF1000 Africa Twin	1000	2018	2018	**163720104** **JTF1370.16**	**163722640** **JTR1331.42ZBK**	**163718346** **JTC525Z3-124RL**	
	HONDA	CRF1000 Africa Twin Adventure Sport	1000	2018	2018	**163720104** **JTF1370.16**	**163722640** **JTR1331.42ZBK**	**163718346** **JTC525Z3-124RL**	
	HONDA	CRF1000 Africa Twin DCT	1000	2018	2018	**163720104** **JTF1370.16**	**163722640** **JTR1331.42ZBK**	**163718346** **JTC525Z3-124RL**	
JTK004150	KAWASAKI	KLE300 Versys-X	300	2017	2017	**163720177** **JTF1539.14**	**163722634** **JTR486.46**	**163718254** **JTC520X1R2-112DL**	
	KAWASAKI	KLE300 Versys-X (ABS)	300	2017	2018	**163720177** **JTF1539.14**	**163722634** **JTR486.46**	**163718254** **JTC520X1R2-112DL**	
JTK004160	KAWASAKI	EN650 Vulcan-S	650	2015	2017	**163720632** **JTF565.15**	**163721656** **JTR478.46**	**163718258** **JTC520X1R2-120DL**	
	KAWASAKI	EN650 Vulcan-S ABS	650	2015	2018	**163720632** **JTF565.15**	**163721656** **JTR478.46**	**163718258** **JTC520X1R2-120DL**	
	KAWASAKI	EN650 Vulcan-S Cafe ABS	650	2015	2018	**163720632** **JTF565.15**	**163721656** **JTR478.46**	**163718258** **JTC520X1R2-120DL**	
JTK004170	KAWASAKI	EX650 Ninja 650 ABS	650	2017	2018	**163720632** **JTF565.15**	**163721656** **JTR478.46**	**163718255** **JTC520X1R2-114DL**	
	KAWASAKI	KLE650 Versys LT	650	2016	2016	**163720632** **JTF565.15**	**163721656** **JTR478.46**	**163718255** **JTC520X1R2-114DL**	
JTK004180	KAWASAKI	KLR650 Camo (KL650)	650	2017	2017	**163720543** **JTF511.15**	**163721685** **JTR487.43**	**163718251** **JTC520X1R2-106DL**	
JTK004190	KAWASAKI	Z900 (ZR900)	900	2017	2018	**163720169** **JTF1537.15**	**163722624** **JTR1489.44**	**163718341** **JTC525Z3-114RL**	
	KAWASAKI	Z900 ABS (ZR900)	900	2017	2018	**163720169** **JTF1537.15**	**163722624** **JTR1489.44**	**163718341** **JTC525Z3-114RL**	
JTK004200	KAWASAKI	ZX-10R (ZX1000) Ninja	1000	2016	2017	**163720171** **JTF1537.17**	**163721181** **JTR1489.39**	**163718341** **JTC525Z3-114RL**	
	KAWASAKI	ZX-10R (ZX1000) Ninja ABS	1000	2016	2018	**163720171** **JTF1537.17**	**163721181** **JTR1489.39**	**163718341** **JTC525Z3-114RL**	
	KAWASAKI	ZX-10R (ZX1000) Ninja KRT ABS	1000	2016	2017	**163720171** **JTF1537.17**	**163721181** **JTR1489.39**	**163718341** **JTC525Z3-114RL**	
	KAWASAKI	ZX-10R SE (ZX1002)	1000	2018	2018	**163720171** **JTF1537.17**	**163721181** **JTR1489.39**	**163718341** **JTC525Z3-114RL**	
	KAWASAKI	ZX-10RR (ZX1000) Ninja	1000	2017	2018	**163720171** **JTF1537.17**	**163721181** **JTR1489.39**	**163718341** **JTC525Z3-114RL**	
JTK004210	KTM	125 Duke	125	2011	2013	**163720240** **JTF1903.14**	**163721522** **JTR273.45**	**163718254** **JTC520X1R2-112DL**	
JTK004220	KTM	125 EXC Enduro	125	2000	2000	**163720229** **JTF1901.14SC**	**163722192** **JTR897.38**	**163718140** **JTC520HDR118SL**	
JTK004230	KTM	125 EXC Enduro	125	2001	2002	**163720229** **JTF1901.14SC**	**163722194** **JTR897.42**	**163718140** **JTC520HDR118SL**	
	KTM	125 EXC Enduro	125	2003	2003	**163720229** **JTF1901.14SC**	**163722194** **JTR897.42**	**163718140** **JTC520HDR118SL**	
	KTM	125 EXC Enduro	125	2004	2011	**163720229** **JTF1901.14SC**	**163722194** **JTR897.42**	**163718140** **JTC520HDR118SL**	
JTK004240	KTM	125 EXC Enduro	125	2012	2016	**163720229** **JTF1901.14SC**	**163722201** **JTR897.50**	**163718140** **JTC520HDR118SL**	
JTK004250	KTM	125 RC	125	2014	2017	**163720240** **JTF1903.14**	**163722575** **JTR890.45ZBK**	**163718257** **JTC520X1R2-118DL**	
	KTM	125 RC	125	2018	2018	**163720240** **JTF1903.14**	**163722575** **JTR890.45ZBK**	**163718257** **JTC520X1R2-118DL**	
JTK004260	KTM	200 Duke	200	2012	2014	**163720240** **JTF1903.14**	**163721520** **JTR273.42**	**163718257** **JTC520X1R2-118DL**	
JTK004270	KTM	200 Duke	200	2015	2016	**163720240** **JTF1903.14**	**163722574** **JTR890.42ZBK**	**163718257** **JTC520X1R2-118DL**	

Codice JT *JT Code*	Casa *Mark*	Modello *Model*	CC	Da *From*	A *To*	Pignone Codice RMS - JT *Front Sprocket* *RMS - JT Code*	Corona Codice RMS - JT *Rear Sprocket* *RMS - JT Code*	Catena Codice RMS - JT *Chain* *RMS - JT Code*	Carrier Codice RMS - JT *RMS - JT Code*
	KTM	200 Duke	200	2017	2018	**163720240** **JTF1903.14**	**163722574** **JTR890.42ZBK**	**163718257** **JTC520X1R2-118DL**	
	KTM	200 RC	200	2014	2016	**163720240** **JTF1903.14**	**163722574** **JTR890.42ZBK**	**163718257** **JTC520X1R2-118DL**	
	KTM	200 RC	200	2017	2018	**163720240** **JTF1903.14**	**163722574** **JTR890.42ZBK**	**163718257** **JTC520X1R2-118DL**	
JTK004280	KTM	200 EXC Enduro	200	2000	2011	**163720229** **JTF1901.14SC**	**163722194** **JTR897.42**	**163718191** **JTC520X1R118DL**	
JTK004290	KTM	200 EXC Enduro	200	2012	2016	**163720229** **JTF1901.14SC**	**163722196** **JTR897.45**	**163718191** **JTC520X1R118DL**	
JTK004300	KTM	250 EXC Enduro	250	2000	2003	**163720230** **JTF1901.15SC**	**163722199** **JTR897.48**	**163718191** **JTC520X1R118DL**	
	KTM	300 EXC Enduro	300	2000	2003	**163720230** **JTF1901.15SC**	**163722199** **JTR897.48**	**163718191** **JTC520X1R118DL**	
JTK004310	KTM	250 EXC Enduro	250	2005	2011	**163720228** **JTF1901.13SC**	**163722193** **JTR897.40**	**163718191** **JTC520X1R118DL**	
JTK004320	KTM	250 EXC Enduro	250	2012	2017	**163720229** **JTF1901.14SC**	**163722201** **JTR897.50**	**163718191** **JTC520X1R118DL**	
	KTM	250 EXC Enduro TPI	250	2018	2018	**163720229** **JTF1901.14SC**	**163722201** **JTR897.50**	**163718191** **JTC520X1R118DL**	
	KTM	250 EXC-F Enduro	250	2012	2013	**163720229** **JTF1901.14SC**	**163722201** **JTR897.50**	**163718191** **JTC520X1R118DL**	
	KTM	300 EXC Enduro	300	2012	2017	**163720229** **JTF1901.14SC**	**163722201** **JTR897.50**	**163718191** **JTC520X1R118DL**	
	KTM	300 EXC TPI Enduro	300	2018	2018	**163720229** **JTF1901.14SC**	**163722201** **JTR897.50**	**163718191** **JTC520X1R118DL**	
	KTM	400 EXC Enduro Racing	400	2001	2002	**163720229** **JTF1901.14SC**	**163722201** **JTR897.50**	**163718191** **JTC520X1R118DL**	
	KTM	500 EXC	500	2013	2016	**163720229** **JTF1901.14SC**	**163722201** **JTR897.50**	**163718191** **JTC520X1R118DL**	
JTK004330	KTM	250 EXC-F Enduro	250	2007	2011	**163720229** **JTF1901.14SC**	**163722192** **JTR897.38**	**163718191** **JTC520X1R118DL**	
JTK004340	KTM	250 EXC-F Enduro	250	2014	2018	**163720229** **JTF1901.14SC**	**163722203** **JTR897.52**	**163718191** **JTC520X1R118DL**	
	KTM	350 EXC-F	350	2012	2018	**163720229** **JTF1901.14SC**	**163722203** **JTR897.52**	**163718191** **JTC520X1R118DL**	
	KTM	450 EXC Enduro Racing	450	2013	2016	**163720229** **JTF1901.14SC**	**163722203** **JTR897.52**	**163718191** **JTC520X1R118DL**	
JTK004350	KTM	250 EXC-F Enduro	250	2015	2018	**163720228** **JTF1901.13SC**	**163722203** **JTR897.52**	**163718191** **JTC520X1R118DL**	
JTK004360	KTM	300 EXC Enduro	300	2004	2004	**163720228** **JTF1901.13SC**	**163722194** **JTR897.42**	**163718191** **JTC520X1R118DL**	
JTK004370	KTM	300 EXC Enduro	300	2005	2011	**163720228** **JTF1901.13SC**	**163722193** **JTR897.40**	**163718190** **JTC520X1R116DL**	
JTK004380	KTM	390 Duke	390	2013	2014	**163720810** **JTF1908.15**	**163722575** **JTR890.45ZBK**	**163718257** **JTC520X1R2-118DL**	
	KTM	390 Duke	390	2015	2016	**163720810** **JTF1908.15**	**163722575** **JTR890.45ZBK**	**163718257** **JTC520X1R2-118DL**	
	KTM	390 Duke	390	2017	2018	**163720810** **JTF1908.15**	**163722575** **JTR890.45ZBK**	**163718257** **JTC520X1R2-118DL**	
	KTM	390 RC	390	2014	2016	**163720810** **JTF1908.15**	**163722575** **JTR890.45ZBK**	**163718257** **JTC520X1R2-118DL**	
	KTM	390 RC	390	2017	2018	**163720810** **JTF1908.15**	**163722575** **JTR890.45ZBK**	**163718257** **JTC520X1R2-118DL**	
	KTM	390 RC R	390	2018	2018	**163720810** **JTF1908.15**	**163722575** **JTR890.45ZBK**	**163718257** **JTC520X1R2-118DL**	
JTK004390	KTM	400 EXC Enduro Racing	400	2003	2011	**163720230** **JTF1901.15SC**	**163722196** **JTR897.45**	**163718191** **JTC520X1R118DL**	
	KTM	450 EXC Enduro Racing	450	2003	2012	**163720230** **JTF1901.15SC**	**163722196** **JTR897.45**	**163718191** **JTC520X1R118DL**	
	KTM	525 EXC Enduro Racing	525	2003	2007	**163720230** **JTF1901.15SC**	**163722196** **JTR897.45**	**163718191** **JTC520X1R118DL**	
	KTM	530 EXC	530	2008	2011	**163720230** **JTF1901.15SC**	**163722196** **JTR897.45**	**163718191** **JTC520X1R118DL**	
JTK004400	KTM	500 EXC	500	2012	2012	**163720228** **JTF1901.13SC**	**163722201** **JTR897.50**	**163718191** **JTC520X1R118DL**	

Codice JT *JT Code*	**Casa** *Mark*	**Modello** *Model*	**CC**	**Da** *From*	**A** *To*	**Pignone Codice RMS - JT** *Front Sprocket RMS - JT Code*	**Corona Codice RMS - JT** *Rear Sprocket RMS - JT Code*	**Catena Codice RMS - JT** *Chain RMS - JT Code*	**Carrier Codice RMS - JT** *RMS - JT Code*
JTK004410	KTM	520 EXC Enduro Racing	520	2000	2002	**163720230 JTF1901.15SC**	**163722193 JTR897.40**	**163718191 JTC520X1R118DL**	
JTK004420	KTM	620 SC Super Competition	620	2000	2001	**163720236 JTF1902.16**	**163722193 JTR897.40**	**163718191 JTC520X1R118DL**	
JTK004430	KTM	620 SC Supermoto	620	2000	2001	**163720237 JTF1902.17**	**163722193 JTR897.40**	**163718191 JTC520X1R118DL**	
JTK004440	KTM	625 LC4 SC Supermoto	625	2002	2002	**163720236 JTF1902.16**	**163722194 JTR897.42**	**163718191 JTC520X1R118DL**	
	KTM	640 LC4 Adventurer R	640	1999	2007	**163720236 JTF1902.16**	**163722194 JTR897.42**	**163718191 JTC520X1R118DL**	
	KTM	640 LC4 E Enduro	640	2000	2006	**163720236 JTF1902.16**	**163722194 JTR897.42**	**163718191 JTC520X1R118DL**	
JTK004450	KTM	625 LC4 Supercompetition	625	2002	2002	**163720235 JTF1902.15**	**163722194 JTR897.42**	**163718191 JTC520X1R118DL**	
JTK004460	KTM	640 LC4 Duke II	640	2000	2003	**163720237 JTF1902.17**	**163722192 JTR897.38**	**163718191 JTC520X1R118DL**	
JTK004470	KTM	640 LC4 Duke II	640	2004	2006	**163720237 JTF1902.17**	**163722194 JTR897.42**	**163718191 JTC520X1R118DL**	
JTK004480	KTM	690 Duke	690	2008	2018	**163720236 JTF1902.16**	**163722193 JTR897.40**	**163718257 JTC520X1R2-118DL**	
	KTM	690 Duke R	690	2010	2017	**163720236 JTF1902.16**	**163722193 JTR897.40**	**163718257 JTC520X1R2-118DL**	
JTK004490	KTM	690 Rally	690	2009	2010	**163720237 JTF1902.17**	**163722194 JTR897.42**	**163718257 JTC520X1R2-118DL**	
JTK004500	KTM	790 Duke	790	2018	2018	**163720236 JTF1902.16**	**163722639 JTR897.41**	**163718343 JTC525Z3-118RL**	
JTK004510	KTM	990 Superduke R	990	2012	2013	**163720243 JTF1904.16**	**163722205 JTR898.38**	**163718343 JTC525Z3-118RL**	
JTK004520	KTM	1190 RC8	1190	2008	2009	**163720244 JTF1904.17**	**163722204 JTR898.37**	**163718343 JTC525Z3-118RL**	
	KTM	1190 RC8 R	1190	2010	2010	**163720244 JTF1904.17**	**163722204 JTR898.37**	**163718343 JTC525Z3-118RL**	
	KTM	1190 RC8 R Akropovic Ltd. Ed.	1190	2010	2010	**163720244 JTF1904.17**	**163722204 JTR898.37**	**163718343 JTC525Z3-118RL**	
	KTM	1190 RC8 R Red Bull Ltd Ed.	1190	2010	2010	**163720244 JTF1904.17**	**163722204 JTR898.37**	**163718343 JTC525Z3-118RL**	
JTK004530	KTM	1290 Superduke	1290	2014	2015	**163720244 JTF1904.17**	**163722576 JTR893.38ZBK**	**163718340 JTC525Z3-112RL**	
	KTM	1290 Superduke GT	1290	2016	2018	**163720244 JTF1904.17**	**163722576 JTR893.38ZBK**	**163718340 JTC525Z3-112RL**	
	KTM	1290 Superduke R	1290	2016	2018	**163720244 JTF1904.17**	**163722576 JTR893.38ZBK**	**163718340 JTC525Z3-112RL**	
JTK004540	SUZUKI	GSX-R125	125	2017	2018	**163720841 JTF1425.14**	**163722638 JTR803.45**	**163718542 JTC428HPOGB122SL**	
	SUZUKI	GSX-S125	125	2017	2018	**163720841 JTF1425.14**	**163722638 JTR803.45**	**163718542 JTC428HPOGB122SL**	
JTK004550	SUZUKI	GSX250 R	250	2017	2018	**163720754 JTF1447.14RB**	**163721992 JTR823.46**	**163718256 JTC520X1R2-116DL**	
	SUZUKI	GW250 Inazuma F	250	2015	2017	**163720754 JTF1447.14RB**	**163721992 JTR823.46**	**163718256 JTC520X1R2-116DL**	
	SUZUKI	GW250 Inazuma Z	250	2015	2016	**163720754 JTF1447.14RB**	**163721992 JTR823.46**	**163718256 JTC520X1R2-116DL**	
JTK004560	SUZUKI	SFV650 AZ Gladius	650	2013	2013	**163720632 JTF565.15**	**163721992 JTR823.46**	**163718254 JTC520X1R2-112DL**	
	SUZUKI	SFV650 Gladius	650	2009	2015	**163720632 JTF565.15**	**163721992 JTR823.46**	**163718254 JTC520X1R2-112DL**	
JTK004570	SUZUKI	GSR750 (ABS)	750	2011	2016	**163720576 JTF520.17**	**163721214 JTR1792.42**	**163718319 JTC525X1R112RL**	
	SUZUKI	GSR750 Z (ABS)	750	2016	2017	**163720576 JTF520.17**	**163721214 JTR1792.42**	**163718319 JTC525X1R112RL**	
JTK004580	SUZUKI	GSX-S750	750	2017	2018	**163720576 JTF520.17**	**163721305 JTR1876.43**	**163718341 JTC525Z3-114RL**	
	SUZUKI	GSX-S750 Z	750	2017	2017	**163720576 JTF520.17**	**163721305 JTR1876.43**	**163718341 JTC525Z3-114RL**	
	SUZUKI	GSX-S750 Z	750	2018	2018	**163720576 JTF520.17**	**163721305 JTR1876.43**	**163718341 JTC525Z3-114RL**	

Codice JT *JT Code*	Casa *Mark*	Modello *Model*	CC	Da *From*	A *To*	Pignone Codice RMS - JT *Front Sprocket* *RMS - JT Code*	Corona Codice RMS - JT *Rear Sprocket* *RMS - JT Code*	Catena Codice RMS - JT *Chain* *RMS - JT Code*	Carrier Codice RMS - JT *RMS - JT Code*
JTK004590	SUZUKI	DL1000 V-Strom ABS	1000	2014	2016	**163720576 JTF520.17**	**163721214 JTR1792.42**	**163718344 JTC525Z3-120RL**	
	SUZUKI	DL1000 V-Strom ABS Adventure	1000	2015	2018	**163720576 JTF520.17**	**163721214 JTR1792.42**	**163718344 JTC525Z3-120RL**	
	SUZUKI	DL1000 V-Strom ABS Desert	1000	2016	2016	**163720576 JTF520.17**	**163721214 JTR1792.42**	**163718344 JTC525Z3-120RL**	
	SUZUKI	DL1000 V-Strom ABS Sport	1000	2016	2016	**163720576 JTF520.17**	**163721214 JTR1792.42**	**163718344 JTC525Z3-120RL**	
	SUZUKI	DL1000 V-Strom XT	1000	2018	2018	**163720576 JTF520.17**	**163721214 JTR1792.42**	**163718344 JTC525Z3-120RL**	
JTK004600	SUZUKI	GSX-R1000	1000	2017	2018	**163720813 JTF444.17**	**163721306 JTR1876.45**	**163718411 JTC530Z3-120RL**	
	SUZUKI	GSX-R1000 R	1000	2017	2018	**163720813 JTF444.17**	**163721306 JTR1876.45**	**163718411 JTC530Z3-120RL**	
JTK004610	SUZUKI	GSX-S1000	1000	2015	2018	**163720576 JTF520.17**	**163722599 JTR1876.44**	**163718342 JTC525Z3-116RL**	
	SUZUKI	GSX-S1000 F	1000	2015	2018	**163720576 JTF520.17**	**163722599 JTR1876.44**	**163718342 JTC525Z3-116RL**	
	SUZUKI	GSX-S1000 Z	1000	2018	2018	**163720576 JTF520.17**	**163722599 JTR1876.44**	**163718342 JTC525Z3-116RL**	
JTK004620	TRIUMPH	765 Street Triple R	765	2017	2018	**163720575 JTF520.16**	**163722630 JTR2014.46**	**163718322 JTC525X1R118RL**	
	TRIUMPH	765 Street Triple R Low	765	2018	2018	**163720575 JTF520.16**	**163722630 JTR2014.46**	**163718322 JTC525X1R118RL**	
	TRIUMPH	765 Street Triple RS	765	2017	2018	**163720575 JTF520.16**	**163722630 JTR2014.46**	**163718322 JTC525X1R118RL**	
	TRIUMPH	765 Street Triple S	765	2017	2018	**163720575 JTF520.16**	**163722630 JTR2014.46**	**163718322 JTC525X1R118RL**	
JTK004630	TRIUMPH	800 Tiger XCA	800	2016	2017	**163720575 JTF520.16**	**163721338 JTR2014.50**	**163718325 JTC525X1R124RL**	
	TRIUMPH	800 Tiger XRT	800	2016	2017	**163720575 JTF520.16**	**163721338 JTR2014.50**	**163718325 JTC525X1R124RL**	
	TRIUMPH	800 Tiger XRX	800	2015	2017	**163720575 JTF520.16**	**163721338 JTR2014.50**	**163718325 JTC525X1R124RL**	
JTK004640	TRIUMPH	865 America (OEM 520 Chain)	865	2015	2017	**163720804 JTF1184.18**	**163722600 JTR2012.42**	**163718276 JTC520Z3-112RL**	
	TRIUMPH	865 America LT (OEM 520 Chain)	865	2014	2017	**163720804 JTF1184.18**	**163722600 JTR2012.42**	**163718276 JTC520Z3-112RL**	
	TRIUMPH	865 Speedmaster	865	2016	2017	**163720804 JTF1184.18**	**163722600 JTR2012.42**	**163718276 JTC520Z3-112RL**	
JTK004650	TRIUMPH	865 Bonneville (OEM 520 Chain)	865	2015	2016	**163720804 JTF1184.18**	**163722625 JTR1793.43**	**163718272 JTC520Z3-104RL**	
	TRIUMPH	865 Bonneville T100 (OEM 520 Chain)	865	2015	2016	**163720804 JTF1184.18**	**163722625 JTR1793.43**	**163718272 JTC520Z3-104RL**	
JTK004660	TRIUMPH	865 Scrambler	865	2016	2017	**163720804 JTF1184.18**	**163722625 JTR1793.43**	**163718273 JTC520Z3-106RL**	
JTK004670	TRIUMPH	1050 Tiger Sport	1050	2014	2016	**163720027 JTF1180.18**	**163721335 JTR2011.45**	**163718411 JTC530Z3-120RL**	
JTK004680	TRIUMPH	1200 Bonneville Bobber	1200	2017	2018	**163720854 JTF1186.17RB**	**163722627 JTR2014.37**	**163718338 JTC525Z3-108RL**	
	TRIUMPH	1200 Bonneville Bobber Black	1200	2018	2018	**163720854 JTF1186.17RB**	**163722627 JTR2014.37**	**163718338 JTC525Z3-108RL**	
	TRIUMPH	1200 Bonneville Speedmaster	1200	2018	2018	**163720854 JTF1186.17RB**	**163722627 JTR2014.37**	**163718338 JTC525Z3-108RL**	
JTK004690	TRIUMPH	1200 Bonneville T120	1200	2016	2018	**163720854 JTF1186.17RB**	**163722627 JTR2014.37**	**163718334 JTC525Z3-100RL**	
	TRIUMPH	1200 Bonneville T120 Black	1200	2016	2018	**163720854 JTF1186.17RB**	**163722627 JTR2014.37**	**163718334 JTC525Z3-100RL**	
JTK004700	TRIUMPH	1200 Thruxton	1200	2016	2018	**163720853 JTF1186.16RB**	**163722629 JTR2014.42**	**163718334 JTC525Z3-100RL**	
	TRIUMPH	1200 Thruxton R	1200	2016	2018	**163720853 JTF1186.16RB**	**163722629 JTR2014.42**	**163718334 JTC525Z3-100RL**	
JTK004710	YAMAHA	MT-03 (MTN320-A)	660	2016	2017	**163720827 JTF565.14**	**163721679 JTR486.43**	**163718254 JTC520X1R2-112DL**	
JTK004720	YAMAHA	MT-07 (ABS)	690	2014	2019	**163720217 JTF1591.16**	**163721305 JTR1876.43**	**163718405 JTC530Z3-108RL**	

Codice JT *JT Code*	**Casa** *Mark*	**Modello** *Model*	**CC**	**Da** *From*	**A** *To*	**Pignone** **Codice RMS - JT** *Front Sprocket* *RMS - JT Code*	**Corona** **Codice RMS - JT** *Rear Sprocket* *RMS - JT Code*	**Catena** **Codice RMS - JT** *Chain* *RMS - JT Code*	**Carrier** **Codice RMS - JT** *RMS - JT Code*
	YAMAHA	FZ-07	700	2015	2017	**163720217** **JTF1591.16**	**163721305** **JTR1876.43**	**163718405** **JTC530Z3-108RL**	
	YAMAHA	MT-07 Motocage (ABS)	700	2015	2016	**163720217** **JTF1591.16**	**163721305** **JTR1876.43**	**163718405** **JTC530Z3-108RL**	
	YAMAHA	XSR700	700	2016	2018	**163720217** **JTF1591.16**	**163721305** **JTR1876.43**	**163718405** **JTC530Z3-108RL**	
JTK004730	YAMAHA	900 Tracer (MTT850)	850	2019	2019	**163720217** **JTF1591.16**	**163721306** **JTR1876.45**	**163718343** **JTC525Z3-118RL**	
	YAMAHA	900 Tracer GT (MTT850)	850	2019	2019	**163720217** **JTF1591.16**	**163721306** **JTR1876.45**	**163718343** **JTC525Z3-118RL**	
JTK004740	YAMAHA	MT-10	1000	2016	2019	**163720217** **JTF1591.16**	**163721305** **JTR1876.43**	**163718341** **JTC525Z3-114RL**	
	YAMAHA	MT-10 SP	1000	2017	2019	**163720217** **JTF1591.16**	**163721305** **JTR1876.43**	**163718341** **JTC525Z3-114RL**	
JTK004750	YAMAHA	XJR1300	1300	2002	2003	**163720680** **JTF579.18**	**163722155** **JTR859.39**	**163718407** **JTC530Z3-112RL**	
JTK004760	YAMAHA	XJR1300	1300	2004	2006	**163720680** **JTF579.18**	**163721658** **JTR479.39**	**163718407** **JTC530Z3-112RL**	
JTPRO0090	DERBI	Senda SM DRD Evo	50	2009	2010	**163720021** **JTF1128.11**	**163721034** **JTR1133.53**	**163718453** **JTC420HDRNB130SL**	
	DERBI	Senda SM DRD Evo Ltd. Ed.	50	2010	2010	**163720021** **JTF1128.11**	**163721034** **JTR1133.53**	**163718453** **JTC420HDRNB130SL**	
	DERBI	Senda SM DRD Racing	50	2011	2012	**163720021** **JTF1128.11**	**163721034** **JTR1133.53**	**163718453** **JTC420HDRNB130SL**	
	DERBI	Senda SM DRD Racing Limited	50	2007	2007	**163720021** **JTF1128.11**	**163721034** **JTR1133.53**	**163718453** **JTC420HDRNB130SL**	
JTPRO0140	APRILIA	RS	50	2006	2013	**163720021** **JTF1128.11**	**163721034** **JTR1133.53**	**163718454** **JTC420HDRNB132SL**	
	APRILIA	RS4	50	2012	2014	**163720021** **JTF1128.11**	**163721034** **JTR1133.53**	**163718454** **JTC420HDRNB132SL**	
	APRILIA	RS4 Replica	50	2012	2014	**163720021** **JTF1128.11**	**163721034** **JTR1133.53**	**163718454** **JTC420HDRNB132SL**	
	DERBI	GPR Nude	50	2006	2013	**163720021** **JTF1128.11**	**163721034** **JTR1133.53**	**163718454** **JTC420HDRNB132SL**	
	DERBI	GPR Racing	50	2006	2013	**163720021** **JTF1128.11**	**163721034** **JTR1133.53**	**163718454** **JTC420HDRNB132SL**	
JTPRO0150	APRILIA	RX	50	2006	2012	**163720021** **JTF1128.11**	**163721026** **JTR1131.53**	**163718454** **JTC420HDRNB132SL**	
	APRILIA	SX	50	2006	2014	**163720021** **JTF1128.11**	**163721026** **JTR1131.53**	**163718454** **JTC420HDRNB132SL**	
JTPRO0270	YAMAHA	MT125 (ABS)	125	2015	2015	**163720180** **JTF1550.14**	**163722481** **JTR1844.48ZBK**	**163718498** **JTC428HPOGB132SL**	
	YAMAHA	YZF-R125	125	2008	2018	**163720180** **JTF1550.14**	**163722481** **JTR1844.48ZBK**	**163718498** **JTC428HPOGB132SL**	
	YAMAHA	YZF-R125 50th Anniversary Edition	125	2012	2012	**163720180** **JTF1550.14**	**163722481** **JTR1844.48ZBK**	**163718498** **JTC428HPOGB132SL**	
JTPRO0280	YAMAHA	WR125 R	125	2009	2015	**163720180** **JTF1550.14**	**163722563** **JTR839.53ZBK**	**163718499** **JTC428HPOGB134SL**	
	YAMAHA	WR125 X	125	2009	2015	**163720180** **JTF1550.14**	**163722563** **JTR839.53ZBK**	**163718499** **JTC428HPOGB134SL**	
JTPRO0800	YAMAHA	XT660 R	660	2004	2015	**163720774** **JTF308.15RB**	**163722567** **JTR855.45ZBK**	**163718231** **JTC520X1R2NN-110DL**	
	YAMAHA	XT660 X Super Motard	660	2004	2015	**163720774** **JTF308.15RB**	**163722567** **JTR855.45ZBK**	**163718231** **JTC520X1R2NN-110DL**	
	YAMAHA	XTZ660 Z Tenere	660	2008	2015	**163720774** **JTF308.15RB**	**163722567** **JTR855.45ZBK**	**163718231** **JTC520X1R2NN-110DL**	
	YAMAHA	XTZ660 Z Tenere ABS	660	2011	2015	**163720774** **JTF308.15RB**	**163722567** **JTR855.45ZBK**	**163718231** **JTC520X1R2NN-110DL**	
JTPRO1040	BMW	F650 Dakar	650	1999	2000	**163720415** **JTF402.16**	**163722538** **JTR5.47ZBK**	**163718232** **JTC520X1R2NN-112DL**	
	BMW	F650 GS	650	1999	2015	**163720415** **JTF402.16**	**163722538** **JTR5.47ZBK**	**163718232** **JTC520X1R2NN-112DL**	

Codice JT *JT Code*	Casa *Mark*	Modello *Model*	CC	Da *From*	A *To*	Pignone Codice RMS - JT *Front Sprocket* *RMS - JT Code*	Corona Codice RMS - JT *Rear Sprocket* *RMS - JT Code*	Catena Codice RMS - JT *Chain* *RMS - JT Code*	Carrier Codice RMS - JT *RMS - JT Code*
	BMW	F650 GS Dakar	650	2001	2005	**163720415 JTF402.16**	**163722538 JTR5.47ZBK**	**163718232 JTC520X1R2NN-112DL**	
	BMW	G650 GS Sertao	650	2012	2013	**163720415 JTF402.16**	**163722538 JTR5.47ZBK**	**163718232 JTC520X1R2NN-112DL**	
JTPRO1110	KAWASAKI	ER-6f (EX650)	650	2006	2016	**163720793 JTF565.15RB**	**163722530 JTR478.46ZBK**	**163718233 JTC520X1R2NN114DL**	
	KAWASAKI	ER-6n (ER650)	650	2006	2016	**163720793 JTF565.15RB**	**163722530 JTR478.46ZBK**	**163718233 JTC520X1R2NN114DL**	
	KAWASAKI	KLE650 Versys	650	2007	2015	**163720793 JTF565.15RB**	**163722530 JTR478.46ZBK**	**163718233 JTC520X1R2NN114DL**	
	KAWASAKI	KLE650 Versys ABS	650	2007	2011	**163720793 JTF565.15RB**	**163722530 JTR478.46ZBK**	**163718233 JTC520X1R2NN114DL**	
	KAWASAKI	KLE650 Versys City	650	2011	2011	**163720793 JTF565.15RB**	**163722530 JTR478.46ZBK**	**163718233 JTC520X1R2NN114DL**	
	KAWASAKI	KLE650 Versys Tourer	650	2011	2011	**163720793 JTF565.15RB**	**163722530 JTR478.46ZBK**	**163718233 JTC520X1R2NN114DL**	
JTPRO1910	HONDA	CB600 F Hornet	600	1998	2006	**163720750 JTF1371.15RB**	**163722440 JTR1304.42ZBK**	**163718327 JTC525Z3NN110RL**	
	HONDA	CB600 S F2	600	2003	2006	**163720750 JTF1371.15RB**	**163722440 JTR1304.42ZBK**	**163718327 JTC525Z3NN110RL**	
JTPRO1990	YAMAHA	MT-09	850	2014	2015	**163720765 JTF1591.16RB**	**163721306 JTR1876.45**	**163718327 JTC525Z3NN110RL**	
	YAMAHA	MT-09 Sport Tracker (ABS)	850	2015	2015	**163720765 JTF1591.16RB**	**163721306 JTR1876.45**	**163718327 JTC525Z3NN110RL**	
	YAMAHA	MT-09 SR Street Rally (ABS)	850	2014	2015	**163720765 JTF1591.16RB**	**163721306 JTR1876.45**	**163718327 JTC525Z3NN110RL**	
JTPRO2380	BMW	F800 GS (JTR3.42 for 10.5mm bolts)	800	2008	2015	**163720801 JTF704.16RB**	**163721584 JTR3.42**	**163718530 JTC525Z3NN116RL**	
	BMW	F800 GS Triple Black	800	2012	2012	**163720801 JTF704.16RB**	**163721584 JTR3.42**	**163718530 JTC525Z3NN116RL**	
	BMW	F800 GS Trophy	800	2012	2012	**163720801 JTF704.16RB**	**163721584 JTR3.42**	**163718530 JTC525Z3NN116RL**	
JTPRO2460	HONDA	XL700 V/VA Transalp	700	2008	2013	**163720770 JTF296.15RB**	**163722519 JTR300.47ZBK**	**163718531 JTC525Z3NN118RL**	
JTPRO2480	SUZUKI	DL650 A V-Strom ABS	650	2007	2015	**163720790 JTF520.15RB**	**163722474 JTR1792.47ZBK**	**163718307 JTC525X1RNN118RL**	
	SUZUKI	DL650 A V-Strom ABS Adventure	650	2015	2015	**163720790 JTF520.15RB**	**163722474 JTR1792.47ZBK**	**163718307 JTC525X1RNN118RL**	
	SUZUKI	DL650 A V-Strom GT	650	2010	2010	**163720790 JTF520.15RB**	**163722474 JTR1792.47ZBK**	**163718307 JTC525X1RNN118RL**	
	SUZUKI	DL650 A V-Strom Traveller	650	2010	2010	**163720790 JTF520.15RB**	**163722474 JTR1792.47ZBK**	**163718307 JTC525X1RNN118RL**	
	SUZUKI	DL650 A V-Strom XT ABS	650	2015	2015	**163720790 JTF520.15RB**	**163722474 JTR1792.47ZBK**	**163718307 JTC525X1RNN118RL**	
JTPRO2490	HONDA	XL650 V Transalp	650	2001	2008	**163720770 JTF296.15RB**	**163721562 JTR300.48**	**163718307 JTC525X1RNN118RL**	
JTPRO2530	KTM	990 Adventure	990	2010	2013	**163720767 JTF1904.16RB**	**163722209 JTR899.42**	**163718531 JTC525Z3NN118RL**	
	KTM	990 Adventure R	990	2010	2013	**163720767 JTF1904.16RB**	**163722209 JTR899.42**	**163718531 JTC525Z3NN118RL**	
JTPRO2590	KTM	950 LC8 Adventure	950	2003	2006	**163720768 JTF1904.17RB**	**163722209 JTR899.42**	**163718531 JTC525Z3NN118RL**	
	KTM	950 LC8 Adventure S	950	2004	2006	**163720768 JTF1904.17RB**	**163722209 JTR899.42**	**163718531 JTC525Z3NN118RL**	
	KTM	990 Adventure	990	2005	2009	**163720768 JTF1904.17RB**	**163722209 JTR899.42**	**163718531 JTC525Z3NN118RL**	
	KTM	990 Adventure S	990	2007	2008	**163720768 JTF1904.17RB**	**163722209 JTR899.42**	**163718531 JTC525Z3NN118RL**	
	KTM	1190 Adventure	1190	2013	2015	**163720768 JTF1904.17RB**	**163722209 JTR899.42**	**163718531 JTC525Z3NN118RL**	
	KTM	1190 Adventure R	1190	2013	2015	**163720768 JTF1904.17RB**	**163722209 JTR899.42**	**163718531 JTC525Z3NN118RL**	
	KTM	1290 Superadventure	1290	2015	2015	**163720768 JTF1904.17RB**	**163722209 JTR899.42**	**163718531 JTC525Z3NN118RL**	

Codice JT *JT Code*	**Casa** *Mark*	**Modello** *Model*	**CC**	**Da** *From*	**A** *To*	**Pignone** **Codice RMS - JT** *Front Sprocket* *RMS - JT Code*	**Corona** **Codice RMS - JT** *Rear Sprocket* *RMS - JT Code*	**Catena** **Codice RMS - JT** *Chain* *RMS - JT Code*	**Carrier** **Codice RMS - JT** *RMS - JT Code*
JTPRO2750	HONDA	XRV750 Africa Twin	750	1993	2003	**163720775** **JTF314.16RB**	**163722452** **JTR1332.45ZBK**	**163718330** **JTC525Z3NN124RL**	
JTPRO2780	TRIUMPH	800 Tiger XC	800	2011	2016	**163720791** **JTF520.16RB**	**163722490** **JTR2014.50ZBK**	**163718330** **JTC525Z3NN124RL**	
	TRIUMPH	800 Tiger XCX	800	2015	2017	**163720791** **JTF520.16RB**	**163722490** **JTR2014.50ZBK**	**163718330** **JTC525Z3NN124RL**	
	TRIUMPH	800 Tiger XR	800	2015	2017	**163720791** **JTF520.16RB**	**163722490** **JTR2014.50ZBK**	**163718330** **JTC525Z3NN124RL**	
JTPRO2980	TRIUMPH	T509 Speed Triple	885	1997	1998	**163720027** **JTF1180.18**	**163722488** **JTR2011.43ZBK**	**163718533** **JTC530Z3NN108RL**	
	TRIUMPH	T595 Daytona	885	1997	1998	**163720027** **JTF1180.18**	**163722488** **JTR2011.43ZBK**	**163718533** **JTC530Z3NN108RL**	
	TRIUMPH	955 Speed Triple	955	1999	2001	**163720027** **JTF1180.18**	**163722488** **JTR2011.43ZBK**	**163718533** **JTC530Z3NN108RL**	
	TRIUMPH	955 Sprint ST	955	1999	2004	**163720027** **JTF1180.18**	**163722488** **JTR2011.43ZBK**	**163718533** **JTC530Z3NN108RL**	
	TRIUMPH	1050 Speed Triple	1050	2012	2015	**163720027** **JTF1180.18**	**163722488** **JTR2011.43ZBK**	**163718533** **JTC530Z3NN108RL**	
	TRIUMPH	1050 Speed Triple R	1050	2012	2015	**163720027** **JTF1180.18**	**163722488** **JTR2011.43ZBK**	**163718533** **JTC530Z3NN108RL**	
JTPRO3530	YAMAHA	FZ6	600	2004	2009	**163720798** **JTF580.16RB**	**163722532** **JTR479.46ZBK**	**163718535** **JTC530Z3NN118RL**	
	YAMAHA	FZ6 Fazer	600	2004	2008	**163720798** **JTF580.16RB**	**163722532** **JTR479.46ZBK**	**163718535** **JTC530Z3NN118RL**	
	YAMAHA	FZ6 Fazer S2 ABS	600	2007	2009	**163720798** **JTF580.16RB**	**163722532** **JTR479.46ZBK**	**163718535** **JTC530Z3NN118RL**	
	YAMAHA	FZ6 S2	600	2007	2009	**163720798** **JTF580.16RB**	**163722532** **JTR479.46ZBK**	**163718535** **JTC530Z3NN118RL**	

La composizione del kit indicata in tabella è quella consigliata dalla casa produttrice. Per eventuali variazioni personalizzate delle misure dei singoli componenti non viene garantita alcuna applicabilità specifica.
I codici dei kit JTPROxxxx seguono la codifica dei Kit standard JTKxxxxxx. Esempio: il kit JTPRO1910 è utilizzabile per le stesse applicazioni del kit JTK001910 ma include il pignone gommato (RB), la corona zincata nera (ZBK) e la catena nichelata.

The kit composition indicated in the table is the one recommended by the manufacturer. For any customized changings of the measures of the individual components, no specific applicability is guaranteed.
The JTPROxxxx kit codes follow the coding of the JTKxxxxxx standard kits.
Example: the JTPRO1910 kit can be used for the same applications as the JTK001910 kit but includes the rubber cushioned front sprocket, the black zinc finish rear sprocket and the nickel-plated chain.

CATENE MINIMOTO - *MINIMOTO CHAINS*



163710010

MODELLO - *MODEL*	MAGLIE - *LINKS*
25HD	158

SP Pin

Heavy Duty

		P	W	D	T	T2	d	L	-
Codice RMS *RMS Code*	**Codice KMC** *KMC Code*	**Passo** *Pitch* [mm]	**Larghezza interna** *Roller link width* [mm]	**Ø rullo** *Roller diameter* [mm]	**Spessore piastrina esterno** *Pin link plate thickness* [mm]	**Spessore piastrina interno** *Roller link plate thickness* [mm]	**Ø perno** *Pin diameter* [mm]	**Lunghezza perno** *Over-all width. Riv.* [mm]	**Carico rottura minimo** *Minimum tensile strength* [KGF]
163710010	25HD	6,35	3,18	3,3	1	1	2,31	8,9	550

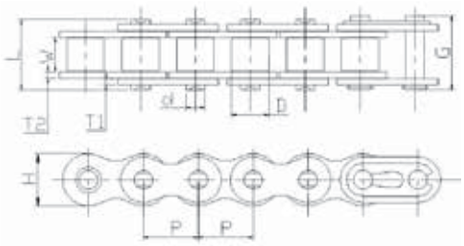

CATENE TRASMISSIONE SIGILLATE CON O-RING - *O-RING SEALED DRIVE CHAINS*



Il disegno specifico delle catene sigillate **KMC** rende costante la lubrificazione prolungando la vita della catena stessa.
La lega d'acciaio di qualità superiore e i trattamenti termici garantiscono una maggiore resistenza alle sollecitazioni.
Inoltre, lo speciale grasso contenuto dagli anelli di tenuta, mantiene costante la lubrificazione ed elimina l'attrito durante il funzionamento, garantendo un'usura minore ed una vita della catena prolungata nel tempo.

*Specific design of sealed-in lubrification allows **KMC** sealed chain to have a longer and optimum life.*
Superior alloy steel and heat-treatment provides better performance in strength.
In addition , special formulated grease retrained by sealants ring, keeps a costant lubrification eliminating friction and prolonging chain life.

163710220

MODELLO - *MODEL*	MAGLIE - *LINKS*
428UO	140



163710030

MODELLO - *MODEL*	MAGLIE - *LINKS*
520UO	120



163710180

MODELLO - *MODEL*	MAGLIE - *LINKS*
525SUO	120



163710070

MODELLO - *MODEL*	MAGLIE - *LINKS*
530SUO	120



163710290

MODELLO - *MODEL*	MAGLIE - *LINKS*
525SUO	130



		P	W	D	T	T2	d	L	G	-
Codice RMS *RMS Code*	**Codice KMC** *KMC Code*	**Passo** *Pitch* [mm]	**Larghezza interna** *Roller link width* [mm]	**Ø rullo** *Roller diameter* [mm]	**Spessore piastrina esterno** *Pin link plate thickness* [mm]	**Spessore piastrina interno** *Roller link plate thickness* [mm]	**Ø perno** *Pin diameter* [mm]	**Lunghezza perno** *Over-all width. Riv.* [mm]	**Lunghezza Perno Giunto** *Over-All Width. Con.* [mm]	**Carico rottura minimo** *Minimum tensile strength* [KGF]
163710220	428UO	12,7	7,85	8,51	1,8	1,8	4,51	20,1	21,8	2100
163710030	520UO	15,875	6,25	10,16	2,2	2,2	5,24	20,55	21,85	3300
163710180	525SUO	15,875	7,85	10,16	2,2	2,2	5,24	22,35	22,65	3900
163710070	530SUO	15,875	9,4	10,16	2,4	2,4	5,35	24,7	25	4300
163710290	525SUO	15,875	7,85	10,16	2,2	2,2	5,24	22,35	22,65	3900

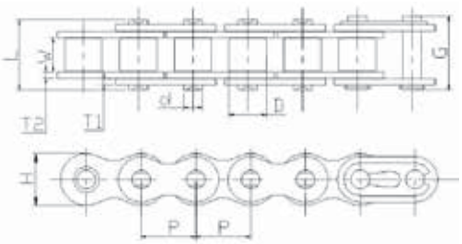

CATENE TRASMISSIONE SIGILLATE CON CROSS-RING - *CROSS-RING SEALED DRIVE CHAINS*



Il disegno specifico delle catene sigillate **KMC** rende costante la lubrificazione prolungando la vita della catena stessa.
La lega d'acciaio di qualità superiore e i trattamenti termici garantiscono una maggiore resistenza alle sollecitazioni.
Il grasso contenuto dagli anelli di tenuta, mantiene costante la lubrificazione ed elimina l'attrito durante il funzionamento, garantendo un'usura minore ed una vita della catena prolungata nel tempo .
Inoltre lo speciale profilo degli elementi sigillanti garantisce una maggiore tenuta del lubrificante, prestazioni superiori, maggior resistenza, riducendo notevolmente gli attriti.

*Specific design of sealed-in lubrification allows **KMC** sealed chain to have a longer and optimum life.*
Superior alloy steel and heat-treatment provides better performance in strength.
Grease retrained by sealants ring , keeps a costant lubrification eliminating friction and prolonging chain life.
In addiction, special shaped sealant cross ring gives to chain best performances, more resistence and tensile strength , friction reduction.

163710190

MODELLO - *MODEL*	MAGLIE - *LINKS*
525EX	120



		P	W	D	T	T2	d	L	G	-
Codice RMS *RMS Code*	**Codice KMC** *KMC Code*	**Passo** *Pitch* [mm]	**Larghezza interna** *Roller link width* [mm]	**Ø rullo** *Roller diameter* [mm]	**Spessore piastrina esterno** *Pin link plate thickness* [mm]	**Spessore piastrina interno** *Roller link plate thickness* [mm]	**Ø perno** *Pin diameter* [mm]	**Lunghezza perno** *Over-all width. Riv.* [mm]	**Lunghezza Perno Giunto** *Over-All Width. Con.* [mm]	**Carico rottura minimo** *Minimum tensile strength* [KGF]
163710190	525EX	15,875	7,85	10,16	2,2	2,2	5,24	22,35	22,35	3900

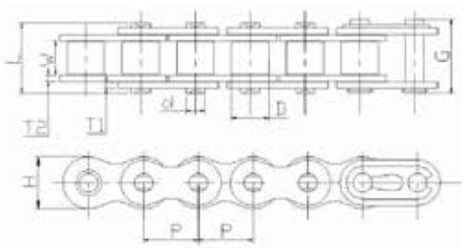

CATENE MOTOCROSS - *MOTOCROSS CHAINS*



Catena per applicazioni off-road, prodotta con le migliori leghe d'acciaio e con esclusivi trattamenti termici che garantiscono una maggiore resistenza richiesta dalla guida in fuoristrada.
KMC, inoltre impiega speciali perni cromati e rullini ad alta resistenza che garantiscono un'usura minima ed elevato assobimento degli shock caratteristici del motocross.
Queste qualità garantiscono al motociclista una guida fluida, divertente e sicura nel fuoristrada.

Chain for off-road applications, made from the best steel alloys and exclusive heat treatments guaranteeing greater strength required by off-road driving.
***KMC** also uses special chrome pins and rollers that ensure high strength , low consumption and high shocks absorption typical of motocross .*
These qualities provide to rider a smooth, fun and safe off-road ride.

163710090

MODELLO - *MODEL*	MAGLIE - *LINKS*
428DX	140



163710110

MODELLO - *MODEL*	MAGLIE - *LINKS*
520DX	120



Codice RMS *RMS Code*	Codice KMC *KMC Code*	P Passo *Pitch* [mm]	W Larghezza interna *Roller link width* [mm]	D Ø rullo *Roller diameter* [mm]	T Spessore piastrina esterno *Pin link plate thickness* [mm]	T2 Spessore piastrina interno *Roller link plate thickness* [mm]	d Ø perno *Pin diameter* [mm]	L Lunghezza perno *Over-all width. Riv.* [mm]	G Lunghezza Perno Giunto *Over-All Width. Con.* [mm]	- Carico rottura minimo *Minimum tensile strength* [KGF]	- Carico rottura medio *Average tensile strength* [KGF]
163710090	428DX	12,7	7,85	8,51	2	2	4,51	18,8	20	2500	3000
163710110	520DX	15,875	6,25	10,16	2	2	5,14	17,35	19,35	3500	3950

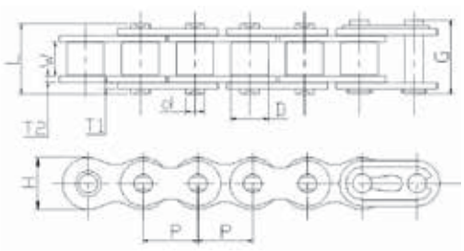

CATENE TRASMISSIONE - *DRIVE CHAINS*



KMC offre una gamma completa di catene di trasmissione per motociclette caratterizzate da alte prestazioni, elevata durata e accurata precisione dimensionale.
Il processo produttivo rigorosamente controllato garantisce che ogni componente soddisfi i più rigidi requisiti richiesti in campo motociclistico garantendo una qualità costante nel tempo oltre al miglior rapporto qualità / prezzo.

***KMC** offers a full range of drive chains for motorcycles characterized by high-performance, high durability and precise dimensional accuracy.*
The strictly controlled manufacturing process ensures that every component meets the strictest requirements in motorcycle market, ensuring consistent quality over time and the best price / quality balance.

163710130

MODELLO - *MODEL*	MAGLIE - *LINKS*
415H	130

163710160

MODELLO - *MODEL*	MAGLIE - *LINKS*
415H	140

163710150

MODELLO - *MODEL*	MAGLIE - *LINKS*
420H	120

163710170

MODELLO - *MODEL*	MAGLIE - *LINKS*
420H	140

163710210

MODELLO - *MODEL*	MAGLIE - *LINKS*
428H	140



163710100

MODELLO - *MODEL*	MAGLIE - *LINKS*
520H	120



163710120

MODELLO - *MODEL*	MAGLIE - *LINKS*
530H	120



		P	W	D	T	T2	d	L	G	-	-
Codice RMS *RMS Code*	**Codice KMC** *KMC Code*	**Passo** *Pitch* [mm]	**Larghezza interna** *Roller link width* [mm]	**Ø rullo** *Roller diameter* [mm]	**Spessore piastrina esterno** *Pin link plate thickness* [mm]	**Spessore piastrina interno** *Roller link plate thickness* [mm]	**Ø perno** *Pin diameter* [mm]	**Lunghezza perno** *Over-all width. Riv.* [mm]	**Lunghezza Perno Giunto** *Over-All Width. Con.* [mm]	**Carico rottura minimo** *Minimum tensile strength* [KGF]	**Carico rottura medio** *Average tensile strength* [KGF]
163710130	415H	12,7	4,68	7,77	1,5	1,5	3,95	13	14,7	1810	1900
163710160	415H	12,7	4,68	7,77	1,5	1,5	3,95	13	14,7	1810	1900
163710150	420H	12,7	6,25	7,77	1,8	1,8	3,95	15,9	17,35	1840	2100
163710170	420H	12,7	6,25	7,77	1,8	1,8	3,95	15,9	17,35	1840	2100
163710210	428H	12,7	7,85	8,51	1,8	1,8	4,45	17,55	19,05	2180	2300
163710100	520H	15,875	6,25	10,16	2,35	2,35	5,07	18,25	20,2	3100	3300
163710120	530H	15,875	9,4	10,16	2,35	2,35	5,07	21,55	23,5	3100	3300

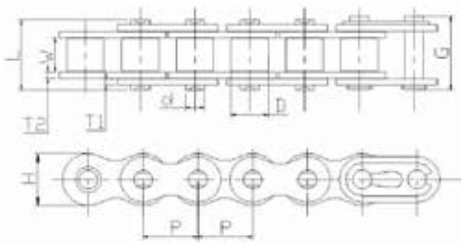



AM CHAIN è il brand più prestigioso del gruppo industriale **AMC CHAIN INDUSTRIAL CO LTD** introdotto nel mercato delle catene di trasmissione nel 2013. Le catene **AM CHAIN** sono realizzate con elevati standard qualitativi, attraverso lo studio dei materiali, dei loro trattamenti termici/galvanici e delle loro tecnologie costruttive.
Nelle catene **AM CHAIN** troviamo trattamenti antifrizione ed antiusura, una speciale cura costruttiva di perni, rullini e maglie per garantire elevatissime caratteristiche meccaniche oltre all'utilizzo di cross ring a ridotto coefficiente d'attrito ed alta tenuta per mantenere costante la lubrificazione anche nell'uso più esasperato.

__AM CHAIN__ is the most prestigious brand that __AMC CHAIN INDUSTRIAL CO LTD__ introduced in the drive chain market during 2013.
__AM CHAIN__ wants to merge all the most advanced technology and knowledge of materials, their heat treatment / plating and construction technologies. With __AM CHAIN__ you can find all the latest technologie concerning anti-friction and anti-wear treatments, a special design features of pins, rollers and links to ensure high mechanical characteristics as well as the use of cross ring with a low coefficient of friction and high resistance to maintain constant lubrication even in the most exasperated use.

163710230

MODELLO - *MODEL*	MAGLIE - *LINKS*
520EX-GO	120



163710260

MODELLO - *MODEL*	MAGLIE - *LINKS*
520EX	120



163710240

MODELLO - *MODEL*	MAGLIE - *LINKS*
520EX-GO	120



163710270

MODELLO - *MODEL*	MAGLIE - *LINKS*
525EX	120



163710250

MODELLO - *MODEL*	MAGLIE - *LINKS*
530EX-GO	120



163710280

MODELLO - *MODEL*	MAGLIE - *LINKS*
530EX	120



		P	W	D	T	T2	d	L	G	-	-
Codice RMS *RMS Code*	**Codice KMC** *KMC Code*	**Passo** *Pitch* [mm]	**Larghezza interna** *Roller link width* [mm]	**Ø rullo** *Roller diameter* [mm]	**Spessore piastrina esterno** *Pin link plate thickness* [mm]	**Spessore piastrina interno** *Roller link plate thickness* [mm]	**Ø perno** *Pin diameter* [mm]	**Lunghezza perno** *Over-all width. Riv.* [mm]	**Lunghezza Perno Giunto** *Over-All Width. Con.* [mm]	**Carico rottura minimo** *Minimum tensile strength* [KGF]	**Carico rottura medio** *Average tensile strength* [KGF]
163710230	520EX-GO	15,875	6,25	10,16	2,2	2,2	5,24	20,65	20,65	3600	3800
163710240	525EX-GO	15,875	7,85	10,16	2,2	2,2	5,24	22,35	22,35	3900	4200
163710250	530EX-GO	15,875	9,4	10,16	2,4	2,4	6,25	24,7	24,7	4500	4700
163710260	520EX	15,875	6,25	10,16	2,2	2,2	5,24	20,65	20,65	3600	3800
163710270	525EX	15,875	7,85	10,16	2,2	2,2	5,24	22,35	22,35	3900	4200
163710280	530EX	15,875	9,4	10,16	2,4	2,4	6,25	24,7	24,7	4500	4700

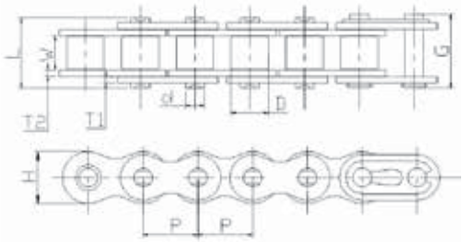

163719010

415H
Con fermo | *With clip*
Confezione 10 Pz. | *10 Pcs Packing*



163719020

420H
Con fermo | *With clip*
Confezione 10 Pz. | *10 Pcs Packing*



163719120

428DX
Con fermo | *With clip*
Confezione 10 Pz. | *10 Pcs Packing*



163719160

428H
Con fermo | *With clip*
Confezione 10 Pz. | *10 Pcs Packing*



163719170

428UO
Con fermo | *With clip*
Confezione 10 Pz. | *10 Pcs Packing*



163719030

520H
Con fermo | *With clip*
Confezione 10 Pz. | *10 Pcs Packing*



163719040

520H
Con fermo | *With clip*
Confezione 10 Pz. | *10 Pcs Packing*



163719080

520UO
A Ribadire | *Riveted*
Confezione 10 Pz. | *10 Pcs Packing*



163719130

520DX
Con fermo | *With clip*
Confezione 10 Pz. | *10 Pcs Packing*



163719220

520 EX-GO
A Ribadire | *Riveted*
Confezione 10 Pz. | *10 Pcs Packing*



163719250

520EX
A Ribadire | *Riveted*
Confezione 10 Pz. | *10 Pcs Packing*



163719090

525SUO
A Ribadire | *Riveted*
Confezione 10 Pz. | *10 Pcs Packing*



163719140

525EX
A Ribadire | *Riveted*
Confezione 10 Pz. | *10 Pcs Packing*



163719230

525 EX-GO
A Ribadire | *Riveted*
Confezione 10 Pz. | *10 Pcs Packing*



163719260

525EX
A Ribadire | *Riveted*
Confezione 10 Pz. | *10 Pcs Packing*



163719100

530SUO
A Ribadire | *Riveted*
Confezione 10 Pz. | *10 Pcs Packing*



163719240

530 EX-GO
A Ribadire | *Riveted*
Confezione 10 Pz. | *10 Pcs Packing*



163719270

530EX
A Ribadire | *Riveted*
Confezione 10 Pz. | *10 Pcs Packing*





Modello *Model*	**CC**	**Da** *From*	**A** *To*	**Telaio** *Frame*	**OEM Girante** *OEM Clutch*	**Codice RMS Girante** *RMS Clutch Code*	**OEM Campana** *OEM Clutch Bell*	**Codice RMS Campana** *RMS Clutch Bell Code*
APRILIA								
Amico	50	1994	1998	HR	-	-	AP8206135	**100260020**
Amico Gl-Gle	50	1993	1995	HU	-	-	AP8206135	**100260020**
Amico Lx- Sport-Cat	50	1992	1993	GC	-	-	AP8206135	**100260020**
Gulliver	50	1995	1998	LH000	-	-	AP8206135	**100260020**
Gulliver Lc	50	1996	1998	LH040	-	-	AP8206135	**100260020**
Mojito Custom	50	1999	2003	PK001\PKE10	-	-	AP2MDA000426	**100260030**
Mojito Custom 2T Motore Piaggio	50	2004	2010	TF000\TFA00	-	-	289933	**100260010**
Mojito Custom 2T Motore Piaggio	50	2004	2010	TF000\TFA00	-	-	289933	**100260011**
Mojito Retro	50	1999	2003	PK000\PKD00	-	-	AP2MDA000426	**100260030**
Rally	50	1995	2003	MD000\MDH00	-	-	AP8206135	**100260020**
Rally Liquid Cooled	50	1996	1999	MDA00\MAD10	-	-	AP8206135	**100260020**
Scarabeo	50	1993	1999	HS\LE	-	-	AP8206135	**100260020**
Scarabeo 2T	50	2014	2014	THH00	CM1002025	**100360551**	289933	**100260010**
Scarabeo 2T	50	2014	2014	THH00	CM1002025	**100360551**	289933	**100260011**
Scarabeo 2T Eu2 Motore Piaggio	50	2010	2012	THG00	CM1002025	**100360551**	289933	**100260010**
Scarabeo 2T Eu2 Motore Piaggio	50	2010	2012	THG00	CM1002025	**100360551**	289933	**100260011**
Scarabeo 2T Net	50	2009	2010	THG00	CM1002025	**100360551**	289933	**100260010**
Scarabeo 2T Net	50	2009	2010	THG00	CM1002025	**100360551**	289933	**100260011**
Scarabeo 4T 4V	50	2010	2014	TGE00	CM1002025	**100360551**	289933	**100260010**
Scarabeo 4T 4V	50	2010	2014	TGE00	CM1002025	**100360551**	289933	**100260011**
Scarabeo 4T 4V Net	50	2009	2010	TGE00	CM1002025	**100360551**	289933	**100260010**
Scarabeo 4T 4V Net	50	2009	2010	TGE00	CM1002025	**100360551**	289933	**100260011**
Scarabeo 4T Restyling Eu3	50	2006	2009	TGA00\TGB00	CM1002025	**100360551**	289933	**100260010**
Scarabeo 4T Restyling Eu3	50	2006	2009	TGA00\TGB00	CM1002025	**100360551**	289933	**100260011**
Scarabeo Ditech	50	2001	2004	SCA00	-	-	AP2MDA000426	**100260030**
Scarabeo Quattro	50	2009	2009	TGE00	CM1002025	**100360551**	289933	**100260010**
Scarabeo Quattro	50	2009	2009	TGE00	CM1002025	**100360551**	289933	**100260011**
Scarabeo Street 2T Restyling	50	2006	2009	THG00	CM1002025	**100360551**	289933	**100260010**
Scarabeo Street 2T Restyling	50	2006	2009	THG00	CM1002025	**100360551**	289933	**100260011**
Sport City One 2T	50	2008	2011	SBA00\TCA00	CM1002025	**100360551**	289933	**100260010**
Sport City One 2T	50	2008	2011	SBA00\TCA00	CM1002025	**100360551**	289933	**100260011**
Sport City One 4T	50	2008	2010	SB000\SBC00	CM1002025	**100360551**	289933	**100260010**
Sport City One 4T	50	2008	2010	SB000\SBC00	CM1002025	**100360551**	289933	**100260011**
Sr	50	1993	1996	GP\LB	-	-	AP8206135	**100260020**
Sr Ditech Euro 2	50	2002	2004	RLD10	-	-	AP2MDA000426	**100260030**
Sr H2O Ditech E Carburatore	50	2000	2004	RLA\RLB\RLE	-	-	AP2MDA000426	**100260030**
Sr Iniezione E Carburatore	50	2014	2014	VFB00\VFD00\VFU00	-	-	289933	**100260010**
Sr Iniezione E Carburatore	50	2014	2014	VFB00\VFD00\VFU00	-	-	289933	**100260011**
Sr Liquid Cooled	50	1994	1996	LC	-	-	AP8206135	**100260020**
Sr Motard 2T	50	2012	2014	LBMC	CM1002025	**100360551**	289933	**100260010**
Sr Motard 2T	50	2012	2014	LBMC	CM1002025	**100360551**	289933	**100260011**
Sr Motard 4T 4V	50	2013	2014	CS5	CM1002025	**100360551**	289933	**100260010**
Sr Motard 4T 4V	50	2013	2014	CS5	CM1002025	**100360551**	289933	**100260011**
Sr R Factory Ie E Carburatore	50	2010	2014	VFB00\VFD00\VFU00	-	-	289933	**100260010**
Sr R Factory Ie E Carburatore	50	2010	2014	VFB00\VFD00\VFU00	-	-	289933	**100260011**
Sr R, R Factory	50	2004	2009	VFB00\VFD00\VFJ\U	-	-	289933	**100260010**
Sr R, R Factory	50	2004	2009	VFB00\VFD00\VFJ\U	-	-	289933	**100260011**
Scarabeo 4T	100	2010	2014	VAA00\VAC00	-	-	289933	**100260010**
Scarabeo 4T	100	2010	2014	VAA00\VAC00	-	-	289933	**100260011**
Scarabeo 4T Net	100	2009	2009	VAC\VAA	-	-	289933	**100260010**
Scarabeo 4T Net	100	2009	2009	VAC\VAA	-	-	289933	**100260011**
Scarabeo 4T Net Eu3	100	2010	2010	ZD4VAC\ZD4VAA	-	-	289933	**100260010**
Scarabeo 4T Net Eu3	100	2010	2010	ZD4VAC\ZD4VAA	-	-	289933	**100260011**
Scarabeo 4T Restyling	100	2006	2009	VAA00\VAC00	-	-	289933	**100260010**
Scarabeo 4T Restyling	100	2006	2009	VAA00\VAC00	-	-	289933	**100260011**
Atlantic Eu3	125	2010	2012	SPD00	CM161202	**100360381**	8440494	**100260191**



APPLICAZIONI CAMPANE E GIRANTI

CLUTCH ASSY AND BELLS APPLICATIONS

Modello *Model*	**CC**	**Da** *From*	**A** *To*	**Telaio** *Frame*	**OEM Girante** *OEM Clutch*	**Codice RMS Girante** *RMS Clutch Code*	**OEM Campana** *OEM Clutch Bell*	**Codice RMS Campana** *RMS Clutch Bell Code*
Leonardo	125	1999	2002	MB03-6\MBA2-5	AP0259739	**100360130**	AP0259662	**100260180**
Leonardo St	125	2001	2004	TB000\TB002	AP0259739	**100360130**	AP0259662	**100260180**
Mojito	125	2008	2008	SZA00	CM144005	**100360381**	8440494	**100260191**
Mojito Retro' - Custom	125	1999	2001	PM000\PM010	AP8550407	**100360010**	AP8550351	**100260040**
Scarabeo Light	125	2007	2008	RB000\RBA00	CM144005	**100360381**	-	**-**
Scarabeo Motore Rotax	125	1999	2004	PC000\PCA00\SD000	AP0259739	**100360130**	AP0259662	**100260180**
Sport City Cube	125	2008	2010	VBE00\VBG00	CM144005	**100360381**	8440494	**100260191**
Sport City One 4T Euro3	125	2008	2009	SG000\SGC00	CM144005	**100360381**	8440494	**100260191**
Sport City One 4T Euro3	125	2009	2011	SG000\SGC00	CM161201	**100360521**	8440494	**100260191**
Sr Max	125	2011	2014	PM35700	CM144005	**100360381**	844049	**100260191**
Sr Motard	125	2012	2014	LBMM7	CM1612015	**100360521**	8440494	**100260191**
Leonardo	150	1996	2002	MB000\MBA00	AP0259738	**100360140**	AP0259662	**100260180**
Leonardo St	150	2001	2004	TB000\TB002	AP0259738	**100360140**	AP0259662	**100260180**
Scarabeo Motore Rotax	150	1999	2004	PC000\PCA00\SD000	AP0259738	**100360140**	AP0259662	**100260180**
Atlantic	200	2003	2005	SP0\SPA\SPB\SPC	AP8575014	**100360330**	AP8577095	**100260050**
Scarabeo	200	2003	2003	TD000\TDA01	AP8575014	**100360330**	AP8580112	**100260050**
Scarabeo Ie Light	200	2009	2010	RBG00\RBH00	CM144021	**100360411**	-	**-**
Scarabeo Ie Light 125-200	200	2011	2012	RBL00\RBM00	CM144021	**100360411**	-	**-**
Scarabeo Light	200	2007	2008	RB000\RBA00	CM144021	**100360411**	-	**-**
Sport City	200	2004	2006	VB000\VBA00	AP8590027	**100360330**	AP8580112	**100260050**
Sport City Euro3	200	2006	2008	VB002\VBA01\VBB00	AP8590027	**100360330**	AP8577095	**100260050**
Atlantic Eu3 125-250	250	2006	2008	SPD00\SPE00	AP8577092	**100360411**	AP8577095	**100260050**
Scarabeo Light	250	2006	2008	VRB00	AP8577092	**100360411**	AP8577095	**100260050**
Sport City Cube	250	2008	2012	VBH00\VBL00	8722515	**100360411**	8440494	**100260191**
Atlantic	300	2010	2012	SPG00	8722515	**100360411**	8440494	**100260191**
Scarabeo Light	300	2009	2010	VRG00	8722515	**100360411**	8440494	**100260191**
Sport City Street	300	2012	2012	VBR00	8722515	**100360411**	8440494	**100260191**
Sr Max	300	2011	2014	PM35600	-	**-**	844049	**100260191**
Atlantic Sprint 400-500	400	2005	2008	VL000\VLA00\VLB00	848844	**100360421**	AP8560026	**100260170**
Scarabeo Light 400-500	400	2006	2008	VR000\VRA00\VRE00	8488445	**100360421**	825176	**100260170**
Atlantic	500	2001	2004	PT00\VH00	AP8560053	**100360320**	AP8560026	**100260170**
Atlantic Sprint 400-500	500	2005	2008	VL000\VLA00\VLB00	AP8560246	**100360310**	AP8560026	**100260170**
Scarabeo	500	2003	2006	RT00	AP8560246	**100360310**	AP8560026	**100260170**
Scarabeo Light 400-500	500	2006	2008	VR000\VRA00\VRE00	8405775	**100360310**	AP8560026	**100260170**
BENELLI								
Adiva 125-150	125	2001	2002	D1	R13440631A0	**100360020**	-	**-**
Velvet 125-150	125	1999	2001	M1000	R16141031A0	**100360061**	-	**-**
Velvet Touring 125-150	125	2002	2003	-	R16141031A0	**100360061**	-	**-**
Adiva 125-150	150	2001	2002	D1	R13440631A0	**100360020**	-	**-**
Velvet 125-150	150	1999	2001	M1000	R16141031A0	**100360061**	-	**-**
Velvet Touring 125-150	150	2002	2003	-	R16141031A0	**100360061**	-	**-**
DERBI								
Atlantis 2T	50	2010	2010	AL4AE2	-	**-**	289933	**100260010**
Atlantis 2T	50	2010	2010	AL4AE2	-	**-**	289933	**100260011**
Atlantis 2T Eu2	50	2007	2009	-	-	**-**	289933	**100260010**
Atlantis 2T Eu2	50	2007	2009	-	-	**-**	289933	**100260011**
Atlantis 4T Eu2	50	2007	2007	-	CM1002025	**100360551**	289933	**100260010**
Atlantis 4T Eu2	50	2007	2007	-	CM1002025	**100360551**	289933	**100260011**
Atlantis 50-100 4T	50	2004	2006	AL1BE2\AT1B1A	CM100202	**100360551**	289933	**100260010**
Atlantis 50-100 4T	50	2004	2006	AL1BE2\AT1B1A	CM100202	**100360551**	289933	**100260011**
Atlantis O2	50	2002	2002	AL1A1A	CM100202	**100360551**	289933	**100260010**
Atlantis O2	50	2002	2002	AL1A1A	CM100202	**100360551**	289933	**100260011**
Atlantis O2 Bullet	50	2003	2005	AL1AE2	-	**-**	289933	**100260010**
Atlantis O2 Bullet	50	2003	2005	AL1AE2	-	**-**	289933	**100260011**
Atlantis O2 City	50	2003	2006	AL1AE2	-	**-**	289933	**100260010**
Atlantis O2 City	50	2003	2006	AL1AE2	-	**-**	289933	**100260011**
Atlantis O2 Red Bullet	50	2003	2003	AL1AE2	-	**-**	289933	**100260010**



Modello *Model*	**CC**	**Da** *From*	**A** *To*	**Telaio** *Frame*	**OEM Girante** *OEM Clutch*	**Codice RMS Girante** *RMS Clutch Code*	**OEM Campana** *OEM Clutch Bell*	**Codice RMS Campana** *RMS Clutch Bell Code*
Atlantis O2 Red Bullet	50	2003	2003	AL1AE2	-	-	289933	**100260011**
Atlantis O2 Two Chic	50	2005	2005	AL1AE2	-	-	289933	**100260010**
Atlantis O2 Two Chic	50	2005	2005	AL1AE2	-	-	289933	**100260011**
Boulevard 2T	50	2009	2014	BR1A1A	CM1002025	**100360551**	289933	**100260010**
Boulevard 2T	50	2009	2014	BR1A1A	CM1002025	**100360551**	289933	**100260011**
Boulevard 4T Eu2 25 Km/H	50	2009	2009	-	CM1002025	**100360551**	289933	**100260010**
Boulevard 4T Eu2 25 Km/H	50	2009	2009	-	CM1002025	**100360551**	289933	**100260011**
Gp1	50	2001	2003	PREDWB\PREDSB	-	-	289933	**100260010**
Gp1	50	2001	2003	PREDWB\PREDSB	-	-	289933	**100260011**
Gp1 E2	50	2003	2003	PREDXB	-	-	289933	**100260010**
Gp1 E2	50	2003	2003	PREDXB	-	-	289933	**100260011**
Gp1 Euro2	50	2005	2005	PR1A1A	-	-	289933	**100260010**
Gp1 Euro2	50	2005	2005	PR1A1A	-	-	289933	**100260011**
Gp1 Open Eu2	50	2006	2009	PR1B1A	-	-	289933	**100260010**
Gp1 Open Eu2	50	2006	2009	PR1B1A	-	-	289933	**100260011**
Gp1 Race Eu2	50	2005	2007	PR1A1A	-	-	289933	**100260010**
Gp1 Race Eu2	50	2005	2007	PR1A1A	-	-	289933	**100260011**
Sonar 2T	50	2009	2009	LR1A1A	CM100202	**100360551**	289933	**100260010**
Sonar 2T	50	2009	2009	LR1A1A	CM100202	**100360551**	289933	**100260011**
Variant Sport 2T	50	2012	2012	SBA00	CM1002025	**100360551**	289933	**100260010**
Variant Sport 2T	50	2012	2012	SBA00	CM1002025	**100360551**	289933	**100260011**
Atlantis 50-100 4T	100	2004	2006	AL1BE2\AT1B1A	-	-	289933	**100260010**
Atlantis 50-100 4T	100	2004	2006	AL1BE2\AT1B1A	-	-	289933	**100260011**
Boulevard 4T	100	2010	2011	M57A00	-	-	289933	**100260010**
Boulevard 4T	100	2010	2011	M57A00	-	-	289933	**100260011**
Boulevard 125-150	125	2002	2002	BL2A1A\BL3A1A	829184	**100360381**	82517R	**100260050**
Boulevard 125-150	125	2003	2004	BL2B1A\BL3B1A	829184	**100360381**	82517R	**100260050**
Boulevard 125-150 Eu2	125	2004	2007	-	CM144005	**100360381**	82517R	**100260050**
Boulevard 4T Eu3	125	2008	2012	VTHM571	CM1612015	**100360521**	8440494	**100260191**
Gp1 Eu2	125	2006	2006	PS1A1A	CM144005	**100360381**	82751R	**100260191**
Gp1 Low Seat 125 Eu3	125	2007	2008	PS1B1A	CM144005	**100360381**	82751R	**100260191**
Rambla 125-250	125	2008	2009	RA1A1A\RA1B1A	CM144005	**100360381**	8440494	**100260191**
Rambla 125-250 E3 2Ver	125	2008	2008	RA1A\RA1B	CM144005	**100360381**	8440494	**100260191**
Sonar 4T	125	2009	2011	LS1A1A	CM1612015	**100360521**	844049	**100260191**
Variant Sport 4T E3	125	2012	2012	SG000	CM161201	**100360521**	8440494	**100260191**
Boulevard 125-150	150	2002	2002	BL2A1A\BL3A1A	829184	**100360381**	82517R	**100260050**
Boulevard 125-150	150	2003	2004	BL2B1A\BL3B1A	829184	**100360381**	82517R	**100260050**
Boulevard 125-150 Eu2	150	2004	2007	-	CM144005	**100360381**	82517R	**100260050**
Boulevard 4T E3	150	2010	2010	M57200	CM1440025	**100360521**	844049	**100260191**
Sonar 4T	150	2009	2009	LS3A1A	CM1612015	**100360521**	82751R	**100260191**
Boulevard Eu2	200	2005	2006	BL4B1A	CM144012	**100360050**	82517R	**100260050**
Gp1	250	2006	2007	PT1A1A	CM1440175	**100360411**	82751R	**100260191**
Gp1 Low Seat 250 Eu3	250	2007	2008	PT1B1A	CM1440175	**100360411**	8440494	**100260191**
Rambla 125-250 E3 2Ver	250	2008	2008	RA1A\RA1B	8722515	**100360411**	8440494	**100260191**
Rambla	300	2010	2011	VTHRA1C	8722515	**100360411**	8440494	**100260191**
GILERA								
Dna	50	2000	2007	C2700	-	-	289933	**100260010**
Dna	50	2000	2007	C2700	-	-	289933	**100260011**
Dna Gp Experience	50	2003	2004	C2700	-	-	289933	**100260010**
Dna Gp Experience	50	2003	2004	C2700	-	-	289933	**100260011**
Easy Moving	50	1995	1996	SSP2T	-	-	289933	**100260010**
Easy Moving	50	1995	1996	SSP2T	-	-	289933	**100260011**
Ice	50	2001	2005	C3000	CM100202	**100360551**	289933	**100260010**
Ice	50	2001	2005	C3000	CM100202	**100360551**	289933	**100260011**
Runner	50	1997	2000	C1400	-	-	289933	**100260010**
Runner	50	1997	2000	C1400	-	-	289933	**100260011**
Runner Poggiali	50	2002	2002	C3620	-	-	289933	**100260010**



APPLICAZIONI CAMPANE E GIRANTI

CLUTCH ASSY AND BELLS APPLICATIONS

Modello *Model*	**CC**	**Da** *From*	**A** *To*	**Telaio** *Frame*	**OEM Girante** *OEM Clutch*	**Codice RMS Girante** *RMS Clutch Code*	**OEM Campana** *OEM Clutch Bell*	**Codice RMS Campana** *RMS Clutch Bell Code*
Runner Poggiali	50	2002	2002	C3620	-	-	289933	**100260011**
Runner Purejet	50	2002	2011	C36100	-	-	289933	**100260010**
Runner Purejet	50	2002	2011	C36100	-	-	289933	**100260011**
Runner Purejet St	50	2008	2008	C46200	-	-	289933	**100260010**
Runner Purejet St	50	2008	2008	C46200	-	-	289933	**100260011**
Runner Sp	50	2002	2012	C3640	-	-	289933	**100260010**
Runner Sp	50	2002	2012	C3640	-	-	289933	**100260011**
Runner Sp Special Edition	50	2007	2007	C46100	-	-	289933	**100260010**
Runner Sp Special Edition	50	2007	2007	C46100	-	-	289933	**100260011**
Runner Sp St & Simoncelli	50	2008	2009	C46100	-	-	289933	**100260010**
Runner Sp St & Simoncelli	50	2008	2009	C46100	-	-	289933	**100260011**
Stalker	50	1997	2011	C1300	CM1002025	**100360551**	289933	**100260010**
Stalker	50	1997	2011	C1300	CM1002025	**100360551**	289933	**100260011**
Stalker Naked	50	2008	2008	C40102	CM1002025	**100360551**	289933	**100260010**
Stalker Naked	50	2008	2008	C40102	CM1002025	**100360551**	289933	**100260011**
Stalker Special Edition	50	2007	2008	C40100	CM1002025	**100360551**	289933	**100260010**
Stalker Special Edition	50	2007	2008	C40100	CM1002025	**100360551**	289933	**100260011**
Storm	50	1994	1995	TEC1T	-	-	289933	**100260010**
Storm	50	1994	1995	TEC1T	-	-	289933	**100260011**
Storm Euro2	50	2007	2007	C29000	-	-	289933	**100260010**
Storm Euro2	50	2007	2007	C29000	-	-	289933	**100260011**
Typhoon	50	1994	1997	TEC1T	-	-	289933	**100260010**
Typhoon	50	1994	1997	TEC1T	-	-	289933	**100260011**
Typhoon X	50	1998	1999	TEC2T	-	-	289933	**100260010**
Typhoon X	50	1998	1999	TEC2T	-	-	289933	**100260011**
Typhoon Xr	50	2000	2000	C1900	CM100202	**100360551**	289933	**100260010**
Typhoon Xr	50	2000	2000	C1900	CM100202	**100360551**	289933	**100260011**
Dna 125-180	125	2001	2001	M2600	829184	**100360020**	82517R	**100260050**
Nexus Euro3	125	2007	2008	M35500	CM161202	**100360381**	8440494	**100260191**
Nexus Euro3 Ie	125	2008	2010	M35700	CM161202	**100360381**	8440494	**100260191**
Runner 4T St Euro3	125	2008	2016	M46301	CM161202	**100360381**	8440494	**100260191**
Runner Vx	125	2005	2006	M46100	CM161202	**100360381**	8440494	**100260191**
Runner Vx 4T Euro3	125	2006	2007	M46300	CM161202	**100360381**	8440494	**100260191**
Runner Vx Race	125	2006	2006	M46100	CM144005	**100360381**	8440494	**100260191**
Runner Vx Sc	125	2006	2007	M46100	CM161202	**100360381**	8440494	**100260191**
Runner Vx-Vxr 125-180	125	2000	2001	M2400	829184	**100360020**	82517R	**100260050**
Runner Vx-Vxr 125-200	125	2002	2004	M240\241\243	CM144005	**100360381**	82517R	**100260050**
Dna 125-180	180	2001	2001	M2600	827394	**100360050**	82517R	**100260050**
Runner Vx-Vxr 125-180	180	2000	2001	M2400	827394	**100360050**	82517R	**100260050**
Runner Vxr	200	2005	2006	M46200	CM1612035	**100360330**	8440494	**100260191**
Runner Vxr 4T St Euro3	200	2008	2011	M46401	CM1612035	**100360330**	8440494	**100260191**
Runner Vxr Euro3	200	2007	2007	M46400	CM1440075	**100360330**	8440494	**100260191**
Runner Vxr Race	200	2005	2006	M46200	CM1612035	**100360330**	8440494	**100260191**
Nexus Euro3	250	2006	2007	M35300	CM1440175	**100360411**	8440494	**100260191**
Nexus Sp Euro3	250	2006	2007	M35300	-	-	8440494	**100260191**
Oregon	250	2006	2010	RGEYN25D5	-	-	8440494	**100260191**
Nexus Euro3	300	2008	2011	M35600	-	-	8440494	**100260191**
Fuoco 4T-4V Ie E3 Lt	500	2013	2014	M61100	-	-	825176	**100260170**
Fuoco Euro3	500	2007	2013	M61100	-	-	825176	**100260170**
Nexus	500	2003	2005	M35100	842343	**100360310**	825176	**100260170**
Nexus Euro3	500	2006	2011	M35200	8405775	**100360310**	825176	**100260170**
Nexus Sp Euro3	500	2006	2007	M35200	8405775	**100360310**	825176	**100260170**
HONDA								
Nsc 110 Mpd Vision	110	2012	2016	JF31B8	22535KGF910	**100360160**	-	-
Nsc 110 Mpd Vision	110	2012	2016	JF31B8	22535KGF910	**100360161**	-	-
Fes 125 A S-Wing Abs	125	2007	2013	JF12B	22535KGF910	**100360160**	22101KCW850	**100260111**
Fes 125 A S-Wing Abs	125	2007	2013	JF12B	22535KGF910	**100360161**	22101KCW850	**100260111**



Modello *Model*	**CC**	**Da** *From*	**A** *To*	**Telaio** *Frame*	**OEM Girante** *OEM Clutch*	**Codice RMS Girante** *RMS Clutch Code*	**OEM Campana** *OEM Clutch Bell*	**Codice RMS Campana** *RMS Clutch Bell Code*
Fes 125 Pantheon	125	1998	2002	JF05A	-	**-**	22100KFG000	**100260210**
Fes 125 Pantheon Cbs	125	2003	2007	JF12A	22535KGF910	**100360160**	22101KCW850	**100260111**
Fes 125 Pantheon Cbs	125	2003	2007	JF12A	22535KGF910	**100360161**	22101KCW850	**100260111**
Fes 125 S-Wing	125	2007	2010	JF12A	22535KGF910	**100360160**	22101KCW850	**100260111**
Fes 125 S-Wing	125	2007	2010	JF12A	22535KGF910	**100360161**	22101KCW850	**100260111**
Nes 125 @/ Arobase	125	2000	2002	JF07A	22535KGF910	**100360160**	22101KCW850	**100260111**
Nes 125 @/ Arobase	125	2000	2002	JF07A	22535KGF910	**100360161**	22101KCW850	**100260111**
Nss 125 Ad Forza Abs	125	2015	2016	JF60B	-	**-**	22100KFG000	**100260210**
Pcx 125 Ww125Ex2	125	2010	2014	JF28A	22535KGF910	**100360160**	-	**-**
Pcx 125 Ww125Ex2	125	2010	2014	JF28A	22535KGF910	**100360161**	-	**-**
Pes 125 Ps I	125	2006	2013	JF17A	22535KGF910	**100360160**	22101KCW850	**100260111**
Pes 125 Ps I	125	2006	2013	JF17A	22535KGF910	**100360161**	22101KCW850	**100260111**
Ses 125 Dylan	125	2002	2006	JF10A	22535KGF910	**100360160**	22101KCW850	**100260111**
Ses 125 Dylan	125	2002	2006	JF10A	22535KGF910	**100360161**	22101KCW850	**100260111**
Sh 125	125	2001	2004	JF09A	22535KGF910	**100360160**	22101KCW850	**100260111**
Sh 125	125	2001	2004	JF09A	22535KGF910	**100360161**	22101KCW850	**100260111**
Sh 125 A I Abs	125	2013	2013	JF41B	22535KGF910	**100360160**	-	**-**
Sh 125 A I Abs	125	2013	2013	JF41B	22535KGF910	**100360161**	-	**-**
Sh 125 D I	125	2009	2009	JF23A	22535KGF910	**100360160**	22101KCW850	**100260111**
Sh 125 D I	125	2009	2009	JF23A	22535KGF910	**100360161**	22101KCW850	**100260111**
Sh 125 I	125	2005	2013	JF14A	22535KGF910	**100360160**	22101KCW850	**100260111**
Sh 125 I	125	2005	2013	JF14A	22535KGF910	**100360161**	22101KCW850	**100260111**
Fes 150 A S-Wing Abs	150	2007	2009	KF06B	22535KGF910	**100360160**	22101KCW850	**100260111**
Fes 150 A S-Wing Abs	150	2007	2009	KF06B	22535KGF910	**100360161**	22101KCW850	**100260111**
Fes 150 Pantheon	150	1998	2002	KF02A	-	**-**	22100KFG000	**100260210**
Fes 150 S-Wing	150	2007	2009	KF06A	22535KGF910	**100360160**	22101KCW850	**100260111**
Fes 150 S-Wing	150	2007	2009	KF06A	22535KGF910	**100360161**	22101KCW850	**100260111**
Nes 150 @/ Arobase	150	2000	2006	KF03A	22535KGF910	**100360160**	22101KCW850	**100260111**
Nes 150 @/ Arobase	150	2000	2006	KF03A	22535KGF910	**100360161**	22101KCW850	**100260111**
Pes 150 Ps I	150	2006	2010	KF09A	22535KGF910	**100360160**	22101KCW850	**100260111**
Pes 150 Ps I	150	2006	2010	KF09A	22535KGF910	**100360161**	22101KCW850	**100260111**
Sh 150	150	2001	2004	KF04A	22535KGF910	**100360160**	22101KCW850	**100260111**
Sh 150	150	2001	2004	KF04A	22535KGF910	**100360161**	22101KCW850	**100260111**
Sh 150 A I Abs	150	2013	2015	KF13B	22535KGF910	**100360160**	-	**-**
Sh 150 A I Abs	150	2013	2015	KF13B	22535KGF910	**100360161**	-	**-**
Sh 150 D I	150	2009	2011	KF10A	22535KGF910	**100360160**	22101KCW850	**100260111**
Sh 150 D I	150	2009	2011	KF10A	22535KGF910	**100360161**	22101KCW850	**100260111**
Sh 150 I	150	2005	2008	KF08A	22535KGF910	**100360160**	22101KCW850	**100260111**
Sh 150 I	150	2005	2008	KF08A	22535KGF910	**100360161**	22101KCW850	**100260111**
Fes 250 Foresight	250	1998	2005	MF04A	22535KFG000	**100360100**	22100KFG000	**100260210**
Nss 250 Jazz	250	2001	2004	MF06A	22535KFG000	**100360100**	22100KFG000	**100260210**
Nss 300 A Forza Abs	300	2013	2017	NF04B	22535KVZ630	**100360100**	22100KFG000	**100260210**
Nss 300 Forza	300	2013	2017	NF04A	22535KVZ630	**100360100**	22100KFG000	**100260210**
Sh 300 A I Abs	300	2007	2009	NF02B	22535KTW900	**100360100**	22100KFG000	**100260210**
Sh 300 A I Abs	300	2008	2018	NF02B	22535KVZ630	**100360100**	22100KFG000	**100260210**
Sh 300 I	300	2010	2010	NF02A	22535KVZ630	**100360100**	22100KFG000	**100260210**
KYMCO								
Agility 2T R16	50	2010	2012	C11000	00107100C	**100360490**	-	**-**
Agility 4T Carry	50	2011	2011	U65010	00107100C	**100360490**	-	**-**
Agility 4T R16	50	2008	2008	C10000	00105099	**100360480**	-	**-**
Agility Plus 2T	50	2014	2014	13000	00107100C	**100360490**	-	**-**
Agility R12	50	2005	2005	U60000	00105099	**100360480**	-	**-**
Agility R12 Ecs	50	2016	2016	U68000	00105099	**100360480**	-	**-**
Agility Rs	50	2009	2009	U600B0	00107100C	**100360490**	-	**-**
Agility Rs Naked 2T	50	2010	2010	U10000	00107100C	**100360490**	-	**-**
B&W	50	2002	2002	S80000	00107100C	**100360490**	-	**-**
B&W Euro2	50	2003	2003	S80010	00107100C	**100360490**	-	**-**



APPLICAZIONI CAMPANE E GIRANTI

CLUTCH ASSY AND BELLS APPLICATIONS

Modello *Model*	**CC**	**Da** *From*	**A** *To*	**Telaio** *Frame*	**OEM Girante** *OEM Clutch*	**Codice RMS Girante** *RMS Clutch Code*	**OEM Campana** *OEM Clutch Bell*	**Codice RMS Campana** *RMS Clutch Bell Code*
Cx	50	1993	1993	PR50AE	00107100C	**100360490**	-	-
Cx Super	50	1994	1997	PR50AC	00107100C	**100360490**	-	-
Dink 50 4T	50	2007	2007	U50000	00107100C	**100360490**	-	-
Dink Classic Euro2	50	2003	2003	T80000	00107100C	**100360490**	-	-
Dink Lc	50	1998	2002	SH10	00107100C	**100360490**	-	-
Dj W	50	1994	2000	PR50AD	00107100C	**100360490**	-	-
Dj X	50	1991	1992	KA50A	00107100C	**100360490**	-	-
Dj Y	50	1993	1993	PR50A	00107100C	**100360490**	-	-
Fever Zx	50	1999	2000	SC10AS\SE10CA	00107100C	**100360490**	-	-
Fever Zx Euro2	50	2003	2004	SC10A\S45AW	00107100C	**100360490**	-	-
Heroism	50	1995	1997	SE10BA	00107100C	**100360490**	-	-
K 12	50	1995	2000	SE10CA	00107100C	**100360490**	-	-
Kb	50	1995	2000	SE10CA	00107100C	**100360490**	-	-
Kxr	50	2004	2004	L40000	00107100C	**100360490**	-	-
Like 2T	50	2009	2009	D10000	00107100C	**100360490**	-	-
Maxxer	50	2005	2005	L40000	00107100C	**100360490**	-	-
Mxer	50	2002	2003	L20000	00107100C	**100360490**	-	-
Mxer Euro2	50	2004	2004	L20010	00107100C	**100360490**	-	-
Mxu	50	2006	2007	A10030	00107100C	**100360490**	-	-
Mxu Sr	50	2006	2006	A10010	00107100C	**100360490**	-	-
People	50	2004	2004	BA10AG	00107100C	**100360490**	-	-
People Euro2	50	2003	2011	B10020	00107100C	**100360490**	-	-
People S	50	2005	2008	B90000	00107100C	**100360490**	-	-
People S 4T	50	2006	2008	B91000	00107100C	**100360490**	-	-
Sento	50	2008	2008	U80000	00107100C	**100360490**	-	-
Sniper	50	1993	1993	PR50B	00107100C	**100360490**	-	-
Sniper Dd	50	1994	1996	PR50BB	00107100C	**100360490**	-	-
Super 8 2T	50	2009	2013	U90000	00107100C	**100360490**	-	-
Super 9	50	2000	2000	S10000	00107100C	**100360490**	-	-
Super 9 Sport Euro2	50	2003	2004	S10020	00107100C	**100360490**	-	-
Vitality 2T	50	2004	2004	U30000	00107100C	**100360490**	-	-
Vitality 4T	50	2004	2004	U31000	00105099	**100360480**	-	-
Yup	50	2002	2002	S60000	00107100C	**100360490**	-	-
Yup Euro2	50	2003	2003	S60010	00107100C	**100360490**	-	-
Agility 4T	125	2006	2006	U62000	00127761	**100360160**	00127782	**100260111**
Agility 4T	125	2006	2006	U62000	00127761	**100360161**	00127782	**100260111**
Agility 4T Euro3	125	2006	2008	U62001	00127095	**100360160**	00127782	**100260111**
Agility 4T Euro3	125	2006	2008	U62001	00127095	**100360161**	00127782	**100260111**
Agility Carry	125	2011	2011	U62060	00127801	**100360160**	00127702	**100260111**
Agility Carry	125	2011	2011	U62060	00127801	**100360161**	00127702	**100260111**
Agility Carry Euro4	125	2017	2017	B2565	00127801	**100360160**	00127702	**100260111**
Agility Carry Euro4	125	2017	2017	B2565	00127801	**100360161**	00127702	**100260111**
Agility Plus	125	2014	2014	C21000	00127801	**100360160**	00127702	**100260111**
Agility Plus	125	2014	2014	C21000	00127801	**100360161**	00127702	**100260111**
Agility Plus E4	125	2016	2016	C41000	00127801	**100360160**	00127702	**100260111**
Agility Plus E4	125	2016	2016	C41000	00127801	**100360161**	00127702	**100260111**
Agility R16	125	2008	2008	C20000	00127800	**100360160**	-	-
Agility R16	125	2008	2008	C20000	00127800	**100360161**	-	-
Agility R16	125	2009	2009	C20000	00127800	**100360160**	00127702	**100260111**
Agility R16	125	2009	2009	C20000	00127800	**100360161**	00127702	**100260111**
Agility R16	125	2012	2012	C20000	00127801	**100360160**	00127702	**100260111**
Agility R16	125	2012	2012	C20000	00127801	**100360161**	00127702	**100260111**
Agility Rs	125	2009	2009	U62011	00127761	**100360160**	00127702	**100260111**
Agility Rs	125	2009	2009	U62011	00127761	**100360161**	00127702	**100260111**
B&W 125-150	125	2000	2000	S30010\S30000	00127961	**100360171**	-	-
Dink 125-150	125	1997	1998	SH25AA\SH30AA	00127961	**100360171**	-	-
Dink Classic 125-150	125	2002	2002	SH25BB\SH30BB	00127961	**100360171**	-	-



Modello *Model*	**CC**	**Da** *From*	**A** *To*	**Telaio** *Frame*	**OEM Girante** *OEM Clutch*	**Codice RMS Girante** *RMS Clutch Code*	**OEM Campana** *OEM Clutch Bell*	**Codice RMS Campana** *RMS Clutch Bell Code*
Dink Classic 125-150 Euro2	125	2003	2003	SH25BC\SH30BC	00127961	**100360171**	-	**-**
Dink Lx 125-150	125	1998	2000	SH25BA\SH30BA	00127961	**100360171**	-	**-**
Downtown 125I	125	2009	2016	V21000	00122170	**100360530**	-	**-**
Downtown 125I (Telai > E3700101)	125	2009	2016	V21000	00127801	**100360160**	00127702	**100260111**
Downtown 125I (Telai > E3700101)	125	2009	2016	V21000	00127801	**100360161**	00127702	**100260111**
Downtown E4	125	2016	2016	V21111	00127801	**100360160**	00127702	**100260111**
Downtown E4	125	2016	2016	V21111	00127801	**100360161**	00127702	**100260111**
Grand Dink 125-150	125	2001	2002	S40010\S40000	00127961	**100360171**	-	**-**
Grand Dink 125-150 Euro2	125	2003	2004	S40011\S40001	00127961	**100360171**	-	**-**
Heroism	125	1995	1997	SE25BA	00127761	**100360160**	00127782	**100260111**
Heroism	125	1995	1997	SE25BA	00127761	**100360161**	00127782	**100260111**
K-Xct I	125	2012	2014	D81000	00122170	**100360530**	-	**-**
K-Xct I	125	2012	2014	D81000	-	**-**	00127702	**100260111**
K-Xct I (Telai > C1000330)	125	2012	2014	D81000	00127801	**100360160**	00127702	**100260111**
K-Xct I (Telai > C1000330)	125	2012	2014	D81000	00127801	**100360161**	00127702	**100260111**
Like	125	2009	2009	D20000	00127095	**100360160**	00127702	**100260111**
Like	125	2009	2009	D20000	00127095	**100360161**	00127702	**100260111**
Like Euro4	125	2017	2017	DB2505	-	**-**	00127702	**100260111**
Like Lx	125	2012	2012	D20000	00127095	**100360160**	00127702	**100260111**
Like Lx	125	2012	2012	D20000	00127095	**100360161**	00127702	**100260111**
Movie	125	1999	2000	SL25AA	00127761	**100360160**	00127782	**100260111**
Movie	125	1999	2000	SL25AA	00127761	**100360161**	00127782	**100260111**
Movie 125 Euro3	125	2006	2007	S50012	00127761	**100360160**	00127782	**100260111**
Movie 125 Euro3	125	2006	2007	S50012	00127761	**100360161**	00127782	**100260111**
Movie Xl 125-150	125	2001	2001	S50010\S50000	00127761	**100360160**	00127782	**100260111**
Movie Xl 125-150	125	2001	2001	S50010\S50000	00127761	**100360161**	00127782	**100260111**
Movie Xl 125-150 Euro2	125	2003	2004	S50011\S50001	00127761	**100360160**	00127782	**100260111**
Movie Xl 125-150 Euro2	125	2003	2004	S50011\S50001	00127761	**100360161**	00127782	**100260111**
People 125-150	125	1999	2000	B20000\B20001	00127761	**100360160**	00127782	**100260111**
People 125-150	125	1999	2000	B20000\B20001	00127761	**100360161**	00127782	**100260111**
People 125-150 Euro2	125	2003	2003	B20010\B20020	00127761	**100360160**	00127782	**100260111**
People 125-150 Euro2	125	2003	2003	B20010\B20020	00127761	**100360161**	00127782	**100260111**
People Euro3	125	2007	2008	B20011	00127761	**100360160**	00127782	**100260111**
People Euro3	125	2007	2008	B20011	00127761	**100360161**	00127782	**100260111**
People Euro3	125	2011	2011	B20011	00127801	**100360160**	00127702	**100260111**
People Euro3	125	2011	2011	B20011	00127801	**100360161**	00127702	**100260111**
People Gti	125	2014	2014	V41000	00127801	**100360160**	00127702	**100260111**
People Gti	125	2014	2014	V41000	00127801	**100360161**	00127702	**100260111**
People Gti E4 I	125	2016	2016	V41010	00127801	**100360160**	00127702	**100260111**
People Gti E4 I	125	2016	2016	V41010	00127801	**100360161**	00127702	**100260111**
People One E4	125	2016	2016	D42000	00127801	**100360160**	00127702	**100260111**
People One E4	125	2016	2016	D42000	00127801	**100360161**	00127702	**100260111**
People One I	125	2013	2013	D40000	00127801	**100360160**	00127702	**100260111**
People One I	125	2013	2013	D40000	00127801	**100360161**	00127702	**100260111**
People One I Dd	125	2015	2015	40000	00127801	**100360160**	00127702	**100260111**
People One I Dd	125	2015	2015	40000	00127801	**100360161**	00127702	**100260111**
People S	125	2005	2005	D10000	00127800	**100360160**	00127702	**100260111**
People S	125	2005	2005	D10000	00127800	**100360161**	00127702	**100260111**
People S Dd Euro3	125	2007	2008	D10000	00127800	**100360160**	00127702	**100260111**
People S Dd Euro3	125	2007	2008	D10000	00127800	**100360161**	00127702	**100260111**
People S I Abs	125	2017	2017	T125B4	-	**-**	00127702	**100260111**
Super 8	125	2008	2009	U80100	00127800	**100360160**	00127702	**100260111**
Super 8	125	2008	2009	U80100	00127800	**100360161**	00127702	**100260111**
Vivio 125-150	125	2000	2000	SL25AB\SL30AC	00127761	**100360160**	00127782	**100260111**
Vivio 125-150	125	2000	2000	SL25AB\SL30AC	00127761	**100360161**	00127782	**100260111**
X-Town Cbs	125	2016	2016	W10010	00127801	**100360160**	00127702	**100260111**
X-Town Cbs	125	2016	2016	W10010	00127801	**100360161**	00127702	**100260111**



APPLICAZIONI CAMPANE E GIRANTI

CLUTCH ASSY AND BELLS APPLICATIONS

Modello *Model*	**CC**	**Da** *From*	**A** *To*	**Telaio** *Frame*	**OEM Girante** *OEM Clutch*	**Codice RMS Girante** *RMS Clutch Code*	**OEM Campana** *OEM Clutch Bell*	**Codice RMS Campana** *RMS Clutch Bell Code*
X-Town Cbs (Telai > H1000465)	125	2016	2016	W10010	00122170	**100360530**	-	-
Agility R16	150	2008	2009	C30000	00127801	**100360160**	00127702	**100260111**
Agility R16	150	2008	2009	C30000	00127801	**100360161**	00127702	**100260111**
Agility R16 Plus E4	150	2016	2016	C42000	00127801	**100360160**	00127702	**100260111**
Agility R16 Plus E4	150	2016	2016	C42000	00127801	**100360161**	00127702	**100260111**
Grand Dink 125-150	150	2001	2002	S40010\S40000	00126182	**100360171**	-	-
Grand Dink 125-150 Euro2	150	2003	2004	S40011\S40001	00126182	**100360171**	-	-
Heroism	150	1995	1997	SE30AD	00127761	**100360160**	00127782	**100260111**
Heroism	150	1995	1997	SE30AD	00127761	**100360161**	00127782	**100260111**
Like Euro4	150	2017	2017	130B4	-	-	00127702	**100260111**
Movie 150 Euro3	150	2006	2007	S50002	00127761	**100360160**	00127782	**100260111**
Movie 150 Euro3	150	2006	2007	S50002	00127761	**100360161**	00127782	**100260111**
Movie XI 125-150	150	2001	2001	S50010\S50000	00127761	**100360160**	00127782	**100260111**
Movie XI 125-150	150	2001	2001	S50010\S50000	00127761	**100360161**	00127782	**100260111**
Movie XI 125-150 Euro2	150	2003	2004	S50011\S50001	00127761	**100360160**	00127782	**100260111**
Movie XI 125-150 Euro2	150	2003	2004	S50011\S50001	00127761	**100360161**	00127782	**100260111**
People 125-150	150	1999	2000	B20000\B20001	00127761	**100360160**	00127782	**100260111**
People 125-150	150	1999	2000	B20000\B20001	00127761	**100360161**	00127782	**100260111**
People 125-150 Euro2	150	2003	2003	B20010\B20020	00127761	**100360160**	00127782	**100260111**
People 125-150 Euro2	150	2003	2003	B20010\B20020	00127761	**100360161**	00127782	**100260111**
People S I Abs	150	2017	2017	T030B4	-	-	00127702	**100260111**
Vivio 125-150	150	2000	2000	SL25AB\SL30AC	00127761	**100360160**	00127782	**100260111**
Vivio 125-150	150	2000	2000	SL25AB\SL30AC	00127761	**100360161**	00127782	**100260111**
Agility 200I R16	200	2010	2010	C31000	00127801	**100360160**	00127702	**100260111**
Agility 200I R16	200	2010	2010	C31000	00127801	**100360161**	00127702	**100260111**
Agility I Plus	200	2014	2014	C32000	00127801	**100360160**	00127702	**100260111**
Agility I Plus	200	2014	2014	C32000	00127801	**100360161**	00127702	**100260111**
Agility R16	200	2012	2012	C31000	00127801	**100360160**	00127702	**100260111**
Agility R16	200	2012	2012	C31000	00127801	**100360161**	00127702	**100260111**
Downtown I	200	2010	2010	V22000	00122157	**100360600**	00122150	**100260290**
Like 200I	200	2009	2009	D21000	00127801	**100360160**	00127702	**100260111**
Like 200I	200	2009	2009	D21000	00127801	**100360161**	00127702	**100260111**
Like Lx	200	2012	2012	D21000	00127801	**100360160**	00127702	**100260111**
Like Lx	200	2012	2012	D21000	00127801	**100360161**	00127702	**100260111**
People Gti	200	2010	2010	V42000	00122241	**100360600**	00122150	**100260290**
People S	200	2005	2005	D11000	00127801	**100360160**	00127702	**100260111**
People S	200	2005	2005	D11000	00127801	**100360161**	00127702	**100260111**
People S 200I	200	2007	2007	D12000	00127801	**100360160**	00127782	**100260111**
People S 200I	200	2007	2007	D12000	00127801	**100360161**	00127782	**100260111**
B&W	250	2000	2000	S70000	00127965	**100360360**	-	-
B&W Euro2	250	2003	2003	S70011	00127965	**100360360**	-	-
Grand Dink	250	2001	2002	S41000	00127965	**100360360**	-	-
Grand Dink Euro2	250	2003	2004	S41011	00127965	**100360360**	-	-
People Lc	250	2003	2004	B50000	00127965	**100360360**	-	-
People S	250	2006	2006	D20000	00127965	**100360360**	-	-
People S 250I	250	2007	2007	D21000	00127965	**100360360**	-	-
X Citing	250	2005	2005	T71000	00127965	**100360360**	-	-
X Citing I	250	2006	2007	T71010	00127965	**100360360**	-	-
Yup	250	2003	2003	U20000	00127965	**100360360**	-	-
Downtown 300I	300	2009	2009	V20000	00122241	**100360600**	00122150	**100260290**
Downtown Abs	300	2010	2010	V20010	00122241	**100360600**	00122150	**100260290**
Downtown Abs I	300	2011	2016	V20030	00122241	**100360600**	00122150	**100260290**
Downtown I	300	2011	2011	V20020	00122241	**100360600**	00122150	**100260290**
K-Xct I	300	2012	2012	D80000	00122241	**100360600**	00122150	**100260290**
K-Xct I Abs	300	2014	2014	D8000100	00122241	**100360600**	00122150	**100260290**
People Gti	300	2010	2011	V40000	00122241	**100360600**	00122150	**100260290**



Modello *Model*	**CC**	**Da** *From*	**A** *To*	**Telaio** *Frame*	**OEM Girante** *OEM Clutch*	**Codice RMS Girante** *RMS Clutch Code*	**OEM Campana** *OEM Clutch Bell*	**Codice RMS Campana** *RMS Clutch Bell Code*
People Gti Abs	300	2012	2012	V40010	00122241	**100360600**	00122150	**100260290**
People S 300I	300	2008	2008	D22000	00127965	**100360360**	-	**-**
X Citing 300I	300	2008	2008	T72000	00127965	**100360360**	-	**-**
X Citing 300I R	300	2008	2009	T72001	00127965	**100360360**	-	**-**
MALAGUTI								
Centro Base	50	1993	1994	36	73502300	**100360591**	-	**-**
Centro SI	50	1994	1998	36T	73502300	**100360591**	-	**-**
Centro SI Kat	50	1999	2000	4900000	73503000	**100360591**	-	**-**
Ciak Master	50	2004	2004	-	-	**-**	72602700	**100260030**
Ciak Master Euro 2	50	2006	2006	64000	-	**-**	72602700	**100260030**
Ciak Mono Euro 2	50	2003	2003	-	-	**-**	72604800	**100260020**
Ciak Mono Euro 2 2.3	50	2003	2003	-	-	**-**	72602700	**100260030**
F10 Jet Line	50	1992	1998	35	73502300	**100360591**	-	**-**
F10 Kat	50	1999	2000	48	73503000	**100360591**	-	**-**
F10 Restyling Eu1	50	2001	2002	48	73503000	**100360591**	-	**-**
F10 Restyling Eu2-2.3	50	2003	2004	48\48000	-	**-**	72602700	**100260030**
F10 Restyling Euro2	50	2002	2003	48000	-	**-**	72604800	**100260020**
F10 Restyling Euro2	50	2006	2006	48000	-	**-**	72602700	**100260030**
F12 Aria Restyling Euro 2	50	2006	2006	46000	-	**-**	72602700	**100260030**
F12 Lc Restyling Euro 2	50	2006	2006	62000	-	**-**	72602700	**100260030**
F12 Phantom	50	1994	1998	40	73502300	**100360591**	72602700	**100260030**
F12 Phantom Euro1	50	1999	2000	4600000	-	**-**	72602700	**100260030**
F12 Phantom Lc	50	1994	1998	41	-	**-**	72602700	**100260030**
F12 Phantom Lc Euro1	50	1999	2000	4700000	-	**-**	72602700	**100260030**
F12 Phantom Lc Restyling Eu1	50	2001	2002	4700000	-	**-**	72602700	**100260030**
F12 Phantom Lc Restyling Eu2	50	2002	2002	6200000	-	**-**	72604800	**100260020**
F12 Phantom Lc Restyling Eu2-2.3	50	2003	2004	6200000	-	**-**	72602700	**100260030**
F12 Phantom Lc Twin Disks	50	1998	1998	41	-	**-**	72602700	**100260030**
F12 Phantom Restyling Eu1	50	2001	2002	4600000	-	**-**	72602700	**100260030**
F12 Phantom Restyling Eu2	50	2002	2002	4600000	-	**-**	72604800	**100260020**
F12 Phantom Restyling Eu2-2.3	50	2003	2004	4600000	-	**-**	72602700	**100260030**
F12R Phantom Lc	50	2007	2010	8201	-	**-**	72607500	**100260030**
F15 Fire Fox	50	1996	1998	44	-	**-**	72602700	**100260030**
F15 Fire Fox Air Cooled	50	2005	2006	73K20173	-	**-**	72602700	**100260030**
F15 Fire Fox Euro2	50	2002	2003	44	-	**-**	72604800	**100260020**
F15 Fire Fox Restyling Euro2-2.3	50	2003	2004	44	-	**-**	72602700	**100260030**
F15 Fire Fox Twin Disks & Special	50	1998	1999	44	-	**-**	72602700	**100260030**
F15 Fire Fox Twin Disks Digit Kat	50	1998	2000	4400000	-	**-**	72602700	**100260030**
F15 Lc Restyling Euro 2	50	2004	2005	44000044	-	**-**	72602700	**100260030**
F15 Lc-Tds Restyling Euro 1	50	2001	2001	4400000	-	**-**	72602700	**100260030**
Yesterday - Yesterday Euro	50	1997	2000	45	73502300	**100360591**	-	**-**
Ciak	125	2000	2001	590000	53500200	**100360160**	52601300	**100260111**
Ciak	125	2000	2001	590000	53500200	**100360161**	52601300	**100260111**
Ciak Master	125	2004	2004	590000	53500200	**100360160**	52601300	**100260111**
Ciak Master	125	2004	2004	590000	53500200	**100360161**	52601300	**100260111**
Ciak Master Euro 3	125	2006	2006	ZJM780201	-	**-**	52602200	**100260111**
Ciak Restyling Euro2	125	2003	2003	590000	53500200	**100360160**	52601300	**100260111**
Ciak Restyling Euro2	125	2003	2003	590000	53500200	**100360161**	52601300	**100260111**
Madison	125	1999	2001	530000	73503300	**100360061**	-	**-**
Madison R Restyling	125	2002	2002	530000	73503300	**100360061**	-	**-**
Ciak	150	2000	2002	600000	53500200	**100360160**	52601300	**100260111**
Ciak	150	2000	2002	600000	53500200	**100360161**	52601300	**100260111**
Ciak Master	150	2004	2004	600000	53500200	**100360160**	72602700	**100260030**
Ciak Master	150	2004	2004	600000	53500200	**100360161**	72602700	**100260030**
Ciak Restyling Euro2	150	2003	2003	600000	53500200	**100360160**	52601300	**100260111**
Ciak Restyling Euro2	150	2003	2003	600000	53500200	**100360161**	52601300	**100260111**



APPLICAZIONI CAMPANE E GIRANTI

CLUTCH ASSY AND BELLS APPLICATIONS

Modello *Model*	**CC**	**Da** *From*	**A** *To*	**Telaio** *Frame*	**OEM Girante** *OEM Clutch*	**Codice RMS Girante** *RMS Clutch Code*	**OEM Campana** *OEM Clutch Bell*	**Codice RMS Campana** *RMS Clutch Bell Code*
Madison T	150	1999	2001	550000	73503600	**100360090**	-	-
Ciak Master Euro 2	200	2006	2006	790201	53500400	**100360160**	52602200	**100260111**
Ciak Master Euro 2	200	2006	2006	790201	53500400	**100360161**	52602200	**100260111**
MBK								
Cr Z Target	50	1991	1995	3GF2	-	-	5JHE66110000	**100260030**
Cs Mach G Euro1	50	2002	2003	5RW	-	-	5BRE66110000	**100260030**
Cs Mach G Euro2	50	2002	2004	5RW	-	-	5BRE66110000	**100260030**
Ct S Sorriso	50	1991	1992	3NT7	-	-	5JHE66110000	**100260030**
Ct Ss Sorriso	50	1993	1995	3NTD	-	-	5JHE66110000	**100260030**
Cw Booster	50	2001	2002	5NT	-	-	5JHE66110000	**100260030**
Cw Booster	50	2004	2004	5WW2	-	-	5WWE66110000	**100260030**
Cw Booster Naked	50	2003	2003	1D12	-	-	5JHE66110000	**100260030**
Cw Booster Spirit	50	1996	2000	4VU	-	-	5BRE66110000	**100260030**
Cw Booster Spirit Euro2	50	2002	2003	5RH2	-	-	5JHE66110000	**100260030**
Cw L Booster	50	2001	2003	5SX	-	-	5JHE66110000	**100260030**
Cw L Booster Spirit	50	2003	2003	5XY2\5YA2	-	-	5JHE66110000	**100260030**
Cw R Booster Road (Ita)	50	1994	1995	4PA1	-	-	5JHE66110000	**100260030**
Cw Rs Booster Ng	50	1995	2003	5NU	-	-	5BRE66111000	**100260030**
Cw Rs Booster Ng Euro1	50	1999	2000	5LF	-	-	5BRE66111000	**100260030**
Cw Rsp Booster Rocket (Ita)	50	1997	1998	4UP	-	-	5BRE66111000	**100260030**
Cw Rsx Booster Track (Ita)	50	1996	1998	4YB	-	-	5BRE66110000	**100260030**
Cw Sp Booster Spirit Euro2	50	2002	2002	5RY2	-	-	5JHE66110000	**100260030**
Ew Stunt	50	2000	2002	5LH	-	-	5JHE66110000	**100260030**
Ya R Forte (Che-Ita)	50	1994	1996	4PC	-	-	3YJ166110000	**100260020**
Ya Ta New Sorriso	50	1995	1996	4SD1	-	-	3YJ166110000	**100260020**
Ye Evolis (Ita)	50	1992	1995	4EF	-	-	3YJ166110000	**100260020**
Yh Flipper	50	2001	2002	5PF	-	-	5JHE66110000	**100260030**
Yh Flipper Catalitico	50	1999	2000	5LD	-	-	5BRE66111000	**100260030**
Yh Flipper Euro2	50	2003	2004	5UB	-	-	5BRE66111000	**100260030**
Ym Fizz (Ita)	50	1994	1995	4KH	-	-	3YJ166110000	**100260020**
Yn R Ovetto (Che-Ita)	50	1997	2001	5AD\5MR	-	-	5BRE66111000	**100260030**
Yn R Ovetto Euro1	50	2002	2004	5RN	-	-	5BRE66111000	**100260030**
Yn R Ovetto Euro2	50	2002	2003	5RN	-	-	5BRE66110000	**100260030**
Yq L Nitro Jaguar	50	2004	2004	5SB9	-	-	5JHE66110000	**100260030**
Yq Nitro	50	1997	2004	5SB	-	-	5BRE66111000	**100260030**
Yq Nitro Euro2	50	2003	2003	5SB	-	-	5JHE66110000	**100260030**
Yw Booster	100	1999	2001	4VP	3XYE66200100	**100360571**	-	-
Xq Thunder	125	2001	2002	5HT	5DSE66200000	**100360061**	-	-
Yp Skyliner	125	1998	2002	5DS	5DSE66200000	**100360061**	-	-
Xn Doodo	150	2001	2002	5PR	5KDE66200000	**100360090**	-	-
Xq Thunder	150	2001	2002	5LG	5KDE66200000	**100360090**	-	-
Yp Skyliner	150	2000	2002	5NP2	5KDE66200000	**100360090**	-	-
Yp Skyliner	250	2000	2003	5GM	5GM166200100	**100360070**	5GM166110000	**100260080**
Yp Skyliner Abs	250	2003	2003	5SJ7	5GM166200100	**100360070**	5GM166110000	**100260080**
Xc Kilibre	300	2003	2003	5SE2	5GM166200100	**100360070**	5GM166110000	**100260080**
MZ/MUZ								
Moskito 125	125	2001	2004	-	-	**100360160**	-	-
Moskito 125	125	2001	2004	-	-	**100360161**	-	-
PEUGEOT								
Elyseo 100	100	1998	2001	VGA G2AA	754144	**100360300**	-	-
Speedfight 1 100	100	1998	2000	VGA S2AB	754144	**100360300**	-	-
Vivacity 100	100	1999	2007	VGA S2AC	754144	**100360300**	-	-
PIAGGIO								
Diesis	50	2001	2001	C3400	CM100202	**100360551**	289933	**100260010**
Diesis	50	2001	2001	C3400	CM100202	**100360551**	289933	**100260011**
Fly 2T	50	2005	2007	C44100	CM100202	**100360551**	289933	**100260010**
Fly 2T	50	2005	2007	C44100	CM100202	**100360551**	289933	**100260011**



Modello *Model*	**CC**	**Da** *From*	**A** *To*	**Telaio** *Frame*	**OEM Girante** *OEM Clutch*	**Codice RMS Girante** *RMS Clutch Code*	**OEM Campana** *OEM Clutch Bell*	**Codice RMS Campana** *RMS Clutch Bell Code*
Fly 2T	50	2010	2011	C44700	CM1002025	**100360551**	289933	**100260010**
Fly 2T	50	2010	2011	C44700	CM1002025	**100360551**	289933	**100260011**
Fly 4T	50	2005	2007	C44200	CM100202	**100360551**	289933	**100260010**
Fly 4T	50	2005	2007	C44200	CM100202	**100360551**	289933	**100260011**
Fly 4T & 25-30 Km/H	50	2008	2011	C44500	CM1002025	**100360551**	289933	**100260010**
Fly 4T & 25-30 Km/H	50	2008	2011	C44500	CM1002025	**100360551**	289933	**100260011**
Fly 4T 2V	50	2013	2015	RP8C523	CM1002025	**100360551**	289933	**100260010**
Fly 4T 2V	50	2013	2015	RP8C523	CM1002025	**100360551**	289933	**100260011**
Fly 4T 2V 25-30Km-H	50	2012	2017	RP8C522	CM1002025	**100360551**	289933	**100260010**
Fly 4T 2V 25-30Km-H	50	2012	2017	RP8C522	CM1002025	**100360551**	289933	**100260011**
Fly 4T 4V	50	2012	2013	RP8C521	CM1002025	**100360551**	289933	**100260010**
Fly 4T 4V	50	2012	2013	RP8C521	CM1002025	**100360551**	289933	**100260011**
Fly 4T Motore Chn	50	2006	2007	C44500	CM100202	**100360551**	289933	**100260010**
Fly 4T Motore Chn	50	2006	2007	C44500	CM100202	**100360551**	289933	**100260011**
Free	50	1992	1994	FCS1T	-	**-**	289933	**100260010**
Free	50	1992	1994	FCS1T	-	**-**	289933	**100260011**
Free Delivery	50	2000	2001	FCS2T	-	**-**	289933	**100260010**
Free Delivery	50	2000	2001	FCS2T	-	**-**	289933	**100260011**
Free FI	50	1995	2002	FCS2T	-	**-**	289933	**100260010**
Free FI	50	1995	2002	FCS2T	-	**-**	289933	**100260011**
Liberty 2T	50	2006	2008	C42100	CM1002025	**100360551**	289933	**100260010**
Liberty 2T	50	2006	2008	C42100	CM1002025	**100360551**	289933	**100260011**
Liberty 2T Rst	50	2004	2004	C42100	CM100202	**100360551**	289933	**100260010**
Liberty 2T Rst	50	2004	2004	C42100	CM100202	**100360551**	289933	**100260011**
Liberty 2T Sport	50	2006	2006	C42106	CM100202	**100360551**	289933	**100260010**
Liberty 2T Sport	50	2006	2006	C42106	CM100202	**100360551**	289933	**100260011**
Liberty 2T Sport	50	2007	2008	C42501	CM1002025	**100360551**	289933	**100260010**
Liberty 2T Sport	50	2007	2008	C42501	CM1002025	**100360551**	289933	**100260011**
Liberty 4T	50	2000	2002	C2800	CM100202	**100360551**	289933	**100260010**
Liberty 4T	50	2000	2002	C2800	CM100202	**100360551**	289933	**100260011**
Liberty 4T	50	2005	2008	C42400	CM1002025	**100360551**	289933	**100260010**
Liberty 4T	50	2005	2008	C42400	CM1002025	**100360551**	289933	**100260011**
Liberty 4T Delivery - Single	50	2010	2014	C42401	CM1002025	**100360551**	289933	**100260010**
Liberty 4T Delivery - Single	50	2010	2014	C42401	CM1002025	**100360551**	289933	**100260011**
Liberty 4T Delivery Tnt	50	2009	2009	C42401	CM1002025	**100360551**	289933	**100260010**
Liberty 4T Delivery Tnt	50	2009	2009	C42401	CM1002025	**100360551**	289933	**100260011**
Liberty 4T Ptt - Double - Nexive	50	2009	2017	C42402\C42404	CM1002025	**100360551**	289933	**100260010**
Liberty 4T Ptt - Double - Nexive	50	2009	2017	C42402\C42404	CM1002025	**100360551**	289933	**100260011**
Liberty 4T Ptt (Deu)	50	2007	2012	C42406	CM1002025	**100360551**	289933	**100260010**
Liberty 4T Ptt (Deu)	50	2007	2012	C42406	CM1002025	**100360551**	289933	**100260011**
Liberty 4T Rst	50	2004	2004	C42200	CM100202	**100360551**	289933	**100260010**
Liberty 4T Rst	50	2004	2004	C42200	CM100202	**100360551**	289933	**100260011**
Liberty 4T Sport	50	2006	2008	C42405	CM1002025	**100360551**	289933	**100260010**
Liberty 4T Sport	50	2006	2008	C42405	CM1002025	**100360551**	289933	**100260011**
Liberty Iget 4T 3V Ie	50	2015	2017	RP8C54100	CM1002025	**100360551**	289933	**100260010**
Liberty Iget 4T 3V Ie	50	2015	2017	RP8C54100	CM1002025	**100360551**	289933	**100260011**
Liberty Moc 2T & Elle	50	2009	2013	C49100	CM1002025	**100360551**	289933	**100260010**
Liberty Moc 2T & Elle	50	2009	2013	C49100	CM1002025	**100360551**	289933	**100260011**
Liberty Moc 4T & Elle	50	2009	2016	C49200	CM1002025	**100360551**	289933	**100260010**
Liberty Moc 4T & Elle	50	2009	2016	C49200	CM1002025	**100360551**	289933	**100260011**
Nrg Extreme	50	1999	2000	-	CM100202	**100360551**	289933	**100260010**
Nrg Extreme	50	1999	2000	-	CM100202	**100360551**	289933	**100260011**
Nrg Mc3	50	2001	2004	C320\210	-	**-**	289933	**100260010**
Nrg Mc3	50	2001	2004	C320\210	-	**-**	289933	**100260011**
Nrg Power Dd	50	2005	2017	C45100	-	**-**	289933	**100260010**
Nrg Power Dd	50	2005	2017	C45100	-	**-**	289933	**100260011**
Nrg Power Dd Serie Speciale	50	2007	2012	C45100	-	**-**	289933	**100260010**



APPLICAZIONI CAMPANE E GIRANTI

CLUTCH ASSY AND BELLS APPLICATIONS

Modello *Model*	**CC**	**Da** *From*	**A** *To*	**Telaio** *Frame*	**OEM Girante** *OEM Clutch*	**Codice RMS Girante** *RMS Clutch Code*	**OEM Campana** *OEM Clutch Bell*	**Codice RMS Campana** *RMS Clutch Bell Code*
Nrg Power Dd Serie Speciale	50	2007	2012	C45100	-	-	289933	**100260011**
Nrg Power Dt	50	2006	2015	C45300	-	-	289933	**100260010**
Nrg Power Dt	50	2006	2015	C45300	-	-	289933	**100260011**
Nrg Power Dt Serie Speciale	50	2007	2008	C45300	-	-	289933	**100260010**
Nrg Power Dt Serie Speciale	50	2007	2008	C45300	-	-	289933	**100260011**
Nrg Power Purejet	50	2004	2011	C45200	-	-	289933	**100260010**
Nrg Power Purejet	50	2004	2011	C45200	-	-	289933	**100260011**
Nrg Purejet	50	2002	2010	C320001	-	-	289933	**100260010**
Nrg Purejet	50	2002	2010	C320001	-	-	289933	**100260011**
Nrg Rst Mc2	50	1996	1998	C04000	-	-	289933	**100260010**
Nrg Rst Mc2	50	1996	1998	C04000	-	-	289933	**100260011**
Typhoon	50	2001	2011	C29000	-	-	289933	**100260010**
Typhoon	50	2001	2011	C29000	-	-	289933	**100260011**
Typhoon 2T Euro2	50	2010	2016	LBMC501	CM1002025	**100360551**	289933	**100260010**
Typhoon 2T Euro2	50	2010	2016	LBMC501	CM1002025	**100360551**	289933	**100260011**
Typhoon 2T Euro3 Ch	50	2011	2011	LBMC5	CM1002025	**100360551**	289933	**100260010**
Typhoon 2T Euro3 Ch	50	2011	2011	LBMC5	CM1002025	**100360551**	289933	**100260011**
Velofax	50	1996	1999	VTAC	-	-	289933	**100260010**
Velofax	50	1996	1999	VTAC	-	-	289933	**100260011**
Vespa Et4	50	2000	2005	C26100	CM100202	**100360551**	289933	**100260010**
Vespa Et4	50	2000	2005	C26100	CM100202	**100360551**	289933	**100260011**
Vespa Lx 4T	50	2005	2009	C38300	CM100202	**100360551**	289933	**100260010**
Vespa Lx 4T	50	2005	2009	C38300	CM100202	**100360551**	289933	**100260011**
Vespa Lx 4T-4V	50	2009	2013	C38700	CM1002025	**100360551**	289933	**100260010**
Vespa Lx 4T-4V	50	2009	2013	C38700	CM1002025	**100360551**	289933	**100260011**
Vespa Lx 4T-4V Touring	50	2010	2013	C38700	CM1002025	**100360551**	289933	**100260010**
Vespa Lx 4T-4V Touring	50	2010	2013	C38700	CM1002025	**100360551**	289933	**100260011**
Vespa Primavera 2T	50	2013	2017	C53200	-	-	289933	**100260010**
Vespa Primavera 2T	50	2013	2017	C53200	-	-	289933	**100260011**
Vespa Primavera 4T 2V 25 Km/H	50	2014	2017	C53300	CM1002025	**100360551**	289933	**100260010**
Vespa Primavera 4T 2V 25 Km/H	50	2014	2017	C53300	CM1002025	**100360551**	289933	**100260011**
Vespa Primavera 4T-4V	50	2013	2017	C53100	CM1002025	**100360551**	289933	**100260010**
Vespa Primavera 4T-4V	50	2013	2017	C53100	CM1002025	**100360551**	289933	**100260011**
Vespa S 4T-4V & College	50	2008	2012	M38600	CM1002025	**100360551**	289933	**100260010**
Vespa S 4T-4V & College	50	2008	2012	M38600	CM1002025	**100360551**	289933	**100260011**
Vespa Sprint 2T 2V	50	2014	2017	C53201	-	-	289933	**100260010**
Vespa Sprint 2T 2V	50	2014	2017	C53201	-	-	289933	**100260011**
Vespa Sprint 4T 2V 25 Km/H	50	2014	2017	C53301	-	-	289933	**100260010**
Vespa Sprint 4T 2V 25 Km/H	50	2014	2017	C53301	-	-	289933	**100260011**
Vespa Sprint 4T 4V Noabs E2 Emea	50	2014	2017	C53101	CM1002025	**100360551**	289933	**100260010**
Vespa Sprint 4T 4V Noabs E2 Emea	50	2014	2017	C53101	CM1002025	**100360551**	289933	**100260011**
Zip 2T	50	2008	2013	C25E0	-	-	289933	**100260010**
Zip 2T	50	2008	2013	C25E0	-	-	289933	**100260011**
Zip 4T	50	2000	2005	C25000	CM100202	**100360551**	289933	**100260010**
Zip 4T	50	2000	2005	C25000	CM100202	**100360551**	289933	**100260011**
Zip 4T	50	2006	2013	LBMC25C	CM1002025	**100360551**	289933	**100260010**
Zip 4T	50	2006	2013	LBMC25C	CM1002025	**100360551**	289933	**100260011**
Zip 4T 25Km-H	50	2006	2016	-	CM1002025	**100360551**	289933	**100260010**
Zip 4T 25Km-H	50	2006	2016	-	CM1002025	**100360551**	289933	**100260011**
Zip Sp	50	1996	2004	C1100	-	-	289933	**100260010**
Zip Sp	50	1996	2004	C1100	-	-	289933	**100260011**
Zip Sp Euro2	50	2006	2013	C25000	-	-	289933	**100260010**
Zip Sp Euro2	50	2006	2013	C25000	-	-	289933	**100260011**
Skr City	80	1999	1999	SP81T	-	-	482693	**100260040**
Zip 4T	100	2006	2010	M25200	-	-	289933	**100260010**
Zip 4T	100	2006	2010	M25200	-	-	289933	**100260011**
Beverly	125	2001	2003	M2810\M2820	829184	**100360020**	82517R	**100260191**



Modello *Model*	**CC**	**Da** *From*	**A** *To*	**Telaio** *Frame*	**OEM Girante** *OEM Clutch*	**Codice RMS Girante** *RMS Clutch Code*	**OEM Campana** *OEM Clutch Bell*	**Codice RMS Campana** *RMS Clutch Bell Code*
Beverly Euro 3	125	2007	2008	M28900	CM161202	**100360381**	8440494	**100260191**
Beverly Euro 3 Mic	125	2007	2007	M28900	CM144005	**100360381**	8440494	**100260191**
Beverly Euro 3 Sport	125	2007	2008	M28900	CM161202	**100360381**	8440494	**100260191**
Beverly Rst	125	2004	2005	M28400	CM144005	**100360381**	8440494	**100260191**
Beverly Rst	125	2005	2007	M28400	CM161202	**100360381**	8440494	**100260191**
Beverly Rst 4T 4V Ie Euro3	125	2010	2015	ZAMP69100	CM161202	**100360381**	8440494	**100260191**
Beverly Tourer Euro3	125	2007	2010	M28901	CM161202	**100360381**	8440494	**100260191**
Carnaby	125	2007	2010	M60200	CM161202	**100360381**	8440494	**100260191**
Fly 4T 3V Ie E3 Dt	125	2013	2015	-	CM1672015	**100360510**	-	**-**
Fly 4T 3V Ie Euro3 Lem	125	2012	2013	RP8M791	CM1672015	**100360510**	-	**-**
Fly Euro3	125	2008	2011	M57200	CM1440025	**100360521**	8440494	**100260191**
Hexagon Gtx	125	2000	2000	M2000000\M2000001	CM144005	**100360381**	82751R	**100260191**
Hexagon Lx4	125	1998	1999	M1500	4838335	**100360010**	82503R	**100260040**
Liberty	125	1998	2000	M1100	4838335	**100360010**	82503R	**100260040**
Liberty	125	2001	2002	M2200	CM144005	**100360381**	82751R	**100260191**
Liberty 4T	125	2006	2007	M38100	CM161202	**100360381**	8440494	**100260191**
Liberty 4T 2V Euro3	125	2009	2012	M67100	CM1612015	**100360521**	8440494	**100260191**
Liberty 4T 2V Ie Ptt - Ita	125	2012	2013	M38900	CM163802	**100360561**	880623	**100260271**
Liberty 4T 3V Ie E3	125	2013	2014	M73400	B016913	**100360541**	B016908	**100260261**
Liberty 4T Euro3 Delivery - Single	125	2007	2015	M38602	CM161202	**100360381**	8440494	**100260191**
Liberty 4T Euro3 Delivery - Tnt - Nexive	125	2008	2015	P38602	CM161202	**100360381**	8440494	**100260191**
Liberty 4T Sport Euro3	125	2006	2008	M38601	CM161202	**100360381**	8440494	**100260191**
Liberty Rst	125	2004	2005	M38100	CM144005	**100360381**	82751R	**100260191**
Liberty Rst Ptt	125	2005	2011	M38103	CM1440025	**100360521**	8440494	**100260191**
Liberty Sport	125	2006	2006	M38104	CM161202	**100360381**	8440494	**100260191**
Mp3	125	2006	2008	M47300	CM161202	**100360381**	8440494	**100260191**
Mp3 Ibrido	125	2009	2010	M65100	CM161202	**100360381**	-	**-**
Sfera	125	1995	1997	M0100	4838335	**100360010**	82503R	**100260040**
Skipper 4T	125	2000	2002	M2100	CM144005	**100360381**	82751R	**100260191**
Super Hexagon Gtx 12	125	2001	2002	M2000002\M2000003	CM144005	**100360381**	82751R	**100260191**
Typhoon 4T 2V Euro3	125	2010	2011	C5010	CM1612015	**100360521**	8440494	**100260191**
Vespa 946 4T 3V Abs - 946 Red Emea, Apac	125	2013	2017	M80100	CM1672015	**100360510**	-	**-**
Vespa 946 4T 3V Abs Armani	125	2015	2015	M80101	CM1672015	**100360510**	-	**-**
Vespa Et4	125	1996	1998	M0400	4838335	**100360010**	82503R	**100260040**
Vespa Et4	125	1999	2002	M1900	CM144005	**100360381**	82751R	**100260191**
Vespa Granturismo	125	2003	2005	M311\312	CM144005	**100360381**	82751R	**100260191**
Vespa Granturismo	125	2006	2007	M31101	CM144005	**100360381**	82751R	**100260191**
Vespa Granturismo Euro 3	125	2006	2007	M31300	CM161202	**100360381**	8440494	**100260191**
Vespa Gts 4T Ie Super	125	2009	2016	M45300	CM161202	**100360381**	8440494	**100260191**
Vespa Gts Euro3	125	2007	2012	M31300	CM161202	**100360381**	8440494	**100260191**
Vespa Gtv	125	2006	2008	M31301	CM161202	**100360381**	8440494	**100260191**
Vespa Gtv 4T Navy Euro3	125	2008	2008	M31301	CM161202	**100360381**	8440494	**100260191**
Vespa Lx	125	2005	2006	M44100	CM161202	**100360381**	8440494	**100260191**
Vespa Lx 4T 3V Ie - Touring	125	2012	2013	-	CM1672015	**100360510**	880623	**100260271**
Vespa Lx 4T 3V Ie - Touring	125	2012	2013	-	CM1672015	**100360561**	880623	**100260271**
Vespa Lx 4T Euro3 Touring	125	2010	2011	M68100	CM1612015	**100360521**	8440494	**100260191**
Vespa Lx 4T Fl	125	2009	2009	M44100	CM161202	**100360381**	8440494	**100260191**
Vespa Lx Euro 3	125	2006	2008	M44300	CM161202	**100360381**	8440494	**100260191**
Vespa Lx Euro 3 Ie	125	2009	2011	M68100	CM1612015	**100360521**	8440494	**100260191**
Vespa Lx Primavera 4T 3V Ie	125	2013	2017	M81100	B016913	**100360541**	B016908	**100260261**
Vespa Lxv 4T Euro3	125	2006	2009	M44301	CM161202	**100360381**	8440494	**100260191**
Vespa Lxv 4T Navy Euro3	125	2007	2008	M44301	CM161202	**100360381**	8440494	**100260191**
Vespa Lxv Ie 4T	125	2010	2013	P68102	CM1612015	**100360521**	8440494	**100260191**
Vespa S 4T 3V Ie	125	2012	2012	MM68301	CM1672015	**100360510**	880623	**100260271**
Vespa S 4T 3V Ie	125	2012	2012	MM68301	CM1672015	**100360561**	880623	**100260271**
Vespa S 4T Euro 3	125	2007	2008	M44302	CM161202	**100360381**	8440494	**100260191**
Vespa S 4T Ie & College	125	2009	2011	M68101	CM1612015	**100360521**	8440494	**100260191**



APPLICAZIONI CAMPANE E GIRANTI

CLUTCH ASSY AND BELLS APPLICATIONS

Modello *Model*	**CC**	**Da** *From*	**A** *To*	**Telaio** *Frame*	**OEM Girante** *OEM Clutch*	**Codice RMS Girante** *RMS Clutch Code*	**OEM Campana** *OEM Clutch Bell*	**Codice RMS Campana** *RMS Clutch Bell Code*
Vespa Sprint 4T 3V Ie	125	2014	2015	M81300\01	B0191905	**100360541**	B016908	**100260261**
X7 Euro 3	125	2008	2008	M62100	CM161202	**100360381**	8440494	**100260191**
X8	125	2004	2004	PM36200\PM36300	829184	**100360020**	82517R	**100260191**
X8	125	2005	2006	M36301	CM144005	**100360381**	8440494	**100260191**
X8 Premium Euro 2	125	2006	2006	M36301	CM144005	**100360381**	8440494	**100260191**
X8 Premium Euro 3	125	2006	2007	M36600	CM144005	**100360381**	8440494	**100260191**
X8 Street Euro 2	125	2006	2007	M49100	CM1440025	**100360521**	8440494	**100260191**
X9	125	2001	2002	M2300001	CM144005	**100360381**	-	-
X9 Evolution	125	2003	2003	M2300035	829184	**100360020**	82517R	**100260191**
X9 Evolution	125	2005	2006	M23000	CM144005	**100360381**	8440494	**100260191**
X9 Evolution Euro3	125	2007	2007	M48100	CM144005	**100360381**	8440494	**100260191**
Zip	125	2000	2002	M2500	CM144005	**100360381**	82751R	**100260191**
Fly Euro3	150	2008	2011	M57100	CM1440025	**100360521**	844049	**100260191**
Liberty 4T 3V Lem	150	2013	2014	M73500	CM1672015	**100360510**	-	-
Liberty 4T Euro3	150	2008	2008	M38700	CM161202	**100360381**	8440494	**100260191**
Liberty 4T Sport Euro3	150	2008	2008	M38701	CM161202	**100360381**	8440494	**100260191**
Liberty Moc 4T Euro3	150	2009	2013	M67200	CM1612015	**100360521**	8440494	**100260191**
Vespa Gts Super Ie 4T 3V Au,Ex,Jp,Ri,T,V	150	2014	2015	RP8M4	CM1672015	**100360510**	-	-
Vespa Lt 4T 3V Ie	150	2014	2014	RP8M66603	CM1672015	**100360510**	-	-
Vespa Lx	150	2005	2006	M44200	CM161202	**100360381**	8440494	**100260191**
Vespa Lx 4T 3V Ie - Touring	150	2012	2013	M68400	CM1672015	**100360510**	880623	**100260271**
Vespa Lx 4T 3V Ie - Touring	150	2012	2013	M68400	CM1672015	**100360561**	880623	**100260271**
Vespa Lx 4T FI	150	2009	2009	M44400	CM161202	**100360381**	8440494	**100260191**
Vespa Lx Euro 3	150	2006	2008	M44400	CM161202	**100360381**	8440494	**100260191**
Vespa Lx Euro 3 Ie	150	2009	2011	M68200	CM161202	**100360381**	8440494	**100260191**
Vespa Lx Touring	150	2010	2012	M68200	CM1612015	**100360521**	8440494	**100260191**
Vespa Primavera 4T-3V	150	2013	2016	M81200	CM1672015	**100360510**	-	-
Vespa S 4T	150	2008	2009	M44402	CM161202	**100360381**	8440494	**100260191**
Vespa S 4T Ie & College	150	2009	2012	M68201	CM161202	**100360381**	8440494	**100260191**
Vespa Sprint 4T 3V Ie	150	2015	2015	-	CM1672015	**100360510**	-	-
X8 Street Euro 2	150	2006	2008	M49200	CM1440025	**100360521**	8440494	**100260191**
Hexagon Gtx	180	2000	2000	M2000000\M2000001	CM144012	**100360050**	82751R	**100260191**
Super Hexagon Gtx 12	180	2001	2002	M2000002\M2000003	CM144012	**100360050**	82751R	**100260191**
Carnaby	200	2007	2008	M60100	CM1612035	**100360330**	8440494	**100260191**
Liberty	200	2006	2006	M38400	CM144012	**100360050**	8440494	**100260191**
Liberty 4T Euro3	200	2006	2008	M38500	CM1612035	**100360330**	8440494	**100260191**
Liberty 4T Sport Euro3	200	2006	2007	M38501	CM1612035	**100360330**	8440494	**100260191**
Liberty Rst	200	2004	2004	M3840001	CM144012	**100360050**	82751R	**100260191**
Liberty Sport	200	2006	2006	M38401	CM144012	**100360050**	844049	**100260191**
Vespa Granturismo	200	2006	2007	M31200	CM1440075	**100360330**	82751R	**100260191**
X8	200	2005	2007	M36200	CM1440075	**100360330**	8440494	**100260191**
Beverly	250	2005	2007	M28500	8722515	**100360411**	8440494	**100260191**
Beverly Cruiser	250	2007	2009	M28802	8722515	**100360411**	844049	**100260191**
Beverly Euro 3 Mic	250	2007	2007	M28800	8722515	**100360411**	844049	**100260191**
Beverly Ie Euro 3	250	2006	2008	M28800	CM1440175	**100360411**	844049	**100260191**
Beverly Rst	250	2004	2005	M28500	8722515	**100360411**	844049	**100260191**
Beverly Sport	250	2006	2008	M28800	CM144017	**100360411**	8440494	**100260191**
Beverly Tourer Euro3	250	2007	2009	M28801	8722515	**100360411**	844049	**100260191**
Carnaby	250	2008	2008	M60300	8722515	**100360411**	8440494	**100260191**
Mp3	250	2006	2008	M47201	8722515	**100360411**	8440494	**100260191**
Mp3 Lt	250	2008	2009	M64100	8722515	**100360411**	8440494	**100260191**
Mp3 Mic	250	2008	2009	M63200	8722515	**100360411**	844049	**100260191**
Vespa Gt 60 Euro 3	250	2006	2007	M45102	8722515	**100360411**	8440494	**100260191**
Vespa Gts	250	2005	2016	M45100	8722515	**100360411**	8440494	**100260191**
Vespa Gts Abs	250	2005	2012	45101	CM1440175	**100360411**	8440494	**100260191**
Vespa Gtv	250	2006	2009	M45102	8722515	**100360411**	8440494	**100260191**
Vespa Gtv 4T Navy Euro3	250	2007	2007	M45102	8722515	**100360411**	8440494	**100260191**



Modello *Model*	**CC**	**Da** *From*	**A** *To*	**Telaio** *Frame*	**OEM Girante** *OEM Clutch*	**Codice RMS Girante** *RMS Clutch Code*	**OEM Campana** *OEM Clutch Bell*	**Codice RMS Campana** *RMS Clutch Bell Code*
X Evo	250	2007	2016	M36401\M36401	8722515	**100360411**	8440494	**100260191**
X Evo	250	2007	2016	M36401\M36401	CM144017	**100360411**	8440494	**100260191**
X7 Euro 3	250	2008	2008	M62200	8722515	**100360411**	8440494	**100260191**
X8 Euro3	250	2005	2008	M36400	CM1440175	**100360411**	8440494	**100260191**
X9	250	2000	2001	M23000	496302	**100360110**	496297	**100260210**
X9 Evolution	250	2004	2004	M23000000	CM1440195	**100360411**	82751R	**100260191**
X9 Evolution	250	2006	2006	M23000	8722515	**100360411**	8440494	**100260191**
Beverly Ie Abs E4	300	2016	2017	A2100	8722515	**100360411**	8440494	**100260191**
Beverly Rst 4T 4V Ie Euro3	300	2010	2015	ZAMP69200	8722515	**100360411**	8440494	**100260191**
Beverly Tourer Euro3	300	2009	2010	M28A00	8722515	**100360411**	844049	**100260191**
Carnaby Cruiser	300	2009	2012	M60400	8722515	**100360411**	8440494	**100260191**
Mp3 300 Ie Lt	300	2010	2011	M64102	8722515	**100360411**	844049	**100260191**
Mp3 300 Ie Mic	300	2010	2011	M63301	8722515	**100360411**	844049	**100260191**
Mp3 300 Lt Business - Sport Abs - Enjoy	300	2014	2016	M86200	8722515	**100360411**	8440494	**100260191**
Mp3 Ie E4 Lt Business - Sport Abs	300	2016	2017	TA1100\TA19L	8722515	**100360411**	84404945	**100260191**
Mp3 Ie Lt- Ie Lt Sport	300	2011	2014	M64102	8722515	**100360411**	8440494	**100260191**
Mp3 Ie Lt Touring	300	2011	2013	M64102	8722515	**100360411**	8440494	**100260191**
Mp3 Ie Touring	300	2011	2012	M63301	8722515	**100360411**	8440494	**100260191**
Mp3 Yourban Erl	300	2011	2015	M71200	8722515	**100360411**	8440494	**100260191**
Mp3 Yourban Lt Erl	300	2011	2016	M75100	8722515	**100360411**	8440494	**100260191**
Mp3 Yourban Lt Rl E4	300	2017	2017	TA0100	8722515	**100360411**	84404945	**100260191**
Vespa Gts Ie & Touring	300	2012	2016	M45200	8722515	**100360411**	8440494	**100260191**
Vespa Gts Ie Abs E4 (Emea)	300	2016	2017	MA3300	8722515	**100360411**	84404945	**100260191**
Vespa Gts Ie Touring	300	2011	2012	M45200	8722515	**100360411**	8440494	**100260191**
Vespa Gts Super	300	2008	2016	M45200	8722515	**100360411**	8440494	**100260191**
Vespa Gts Super Sport	300	2010	2013	M45200	8722515	**100360411**	844049	**100260191**
Vespa Gtv 4T 4V Ie	300	2010	2013	M4520	8722515	**100360411**	8440494	**100260191**
Vespa Gtv Sei Giorni Ie E4 Abs (Emea)	300	2017	2017	MA3302	8722515	**100360411**	84404945	**100260191**
Vespa Gtv Via Montenapoleone	300	2010	2010	M45201	8722515	**100360411**	8440494	**100260191**
X7 Evo Ie Euro 3	300	2009	2010	M62201	8722515	**100360411**	8440494	**100260191**
Beverly Euro 3	400	2006	2007	M34300	848844	**100360421**	825176	**100260170**
Beverly Tourer Euro3	400	2008	2010	M34400	848844	**100360421**	825176	**100260170**
Mp3	400	2007	2008	M59100\01	8488445	**100360421**	825176	**100260170**
Mp3 Ie Lt - Mp3 Ie Lt Sport	400	2008	2010	M64200	8488445	**100360421**	825176	**100260170**
Mp3 Ie Lt Touring	400	2011	2011	M64200	8488445	**100360421**	825176	**100260170**
Mp3 Mic	400	2008	2010	M59102	8488445	**100360421**	825176	**100260170**
Mp3 Rl Touring	400	2011	2011	M59101	8488445	**100360421**	825176	**100260170**
X Evo	400	2007	2011	M52101\M52101	8488445	**100360421**	825176	**100260170**
X8 Euro3	400	2006	2008	M52100	8488445	**100360421**	825176	**100260170**
Beverly	500	2002	2006	M34100	8405775	**100360310**	825176	**100260170**
Beverly Cruiser	500	2007	2012	M34500	840577	**100360310**	825176	**100260170**
Beverly Euro 3	500	2006	2008	M34200	840577	**100360310**	825176	**100260170**
Mp3 Lt Business Abs	500	2014	2016	M86100	-	**-**	825176	**100260170**
Mp3 Lt E4 Sport - Business	500	2016	2016	TA1200	-	**-**	8251765	**100260170**
Mp3 Lt Sport - Business	500	2011	2013	M64300	-	**-**	825176	**100260170**
Mp3 Rl Sport - Business	500	2011	2012	M59200	-	**-**	825176	**100260170**
Mp3 Sport Abs	500	2014	2015	M86100	-	**-**	825176	**100260170**
X10 4T 4V Ie Euro3	500	2012	2014	M76300	-	**-**	825176	**100260170**
X9	500	2001	2002	M2700	826053	**100360320**	825176	**100260170**
X9 Evolution	500	2003	2005	M2700004	8423435	**100360310**	825176	**100260170**
X9 Evolution	500	2006	2007	M27000	8405775	**100360310**	825176	**100260170**
X9 Evolution Abs	500	2006	2007	M27000	8405775	**100360310**	825176	**100260170**
SUZUKI								
Uh125 Burgman K2-K6	125	2002	2006	BP111	21501-20E60-000	**100360370**	-	**-**
Uh125 Burgman K7-L0	125	2007	2010	CC111\CC112	21501-46G10-000	**100360431**	-	**-**
Uh125 Burgman L1	125	2011	2012	CC111\CC112	21501-46G10-000	**100360431**	-	**-**
Uh125 Burgman L3	125	2013	2013	CC111\CC112	21501-46G10-000	**100360431**	-	**-**



APPLICAZIONI CAMPANE E GIRANTI

CLUTCH ASSY AND BELLS APPLICATIONS

Modello *Model*	**CC**	**Da** *From*	**A** *To*	**Telaio** *Frame*	**OEM Girante** *OEM Clutch*	**Codice RMS Girante** *RMS Clutch Code*	**OEM Campana** *OEM Clutch Bell*	**Codice RMS Campana** *RMS Clutch Bell Code*
Ux Sixteen K8-L0	125	2008	2010	CN111	21501-46G10-000	**100360431**	-	-
Ux Sixteen L1	125	2011	2011	CN111	21501-46G10-000	**100360431**	-	-
Ux Sixteen K8-L0	150	2008	2010	CP111	21501-46G20-000	**100360440**	-	-
Ux Sixteen L1	150	2011	2011	CP111	21501-46G20-000	**100360440**	-	-
Uh200 Burgman K7-L0	200	2007	2010	CD111\CD112	21501-03H10-000	**100360450**	-	-
Uh200 Burgman L1	200	2011	2012	CD111\CD112	21501-03H30-000	**100360450**	-	-
Uh200 Burgman L3	200	2013	2013	CD111\CD112	21501-03H30-000	**100360450**	-	-
Uh200 Burgman L4	200	2014	2014	C9111\C9112	21501-03H30-000	**100360450**	-	-
An250 Burgman W-K2	250	1998	2002	AN111	21501-14F02-000	**100360120**	-	-
An400 Burgman K3-K6	400	2003	2006	BW111\BW112	21501-15F01-000	**100360110**	-	-
An400 Burgman K7-L0	400	2007	2010	CG111\CG112	21501-05H20-000	**100360460**	-	-
An400 Burgman L1	400	2011	2011	CG111\CG113\CG114	21501-05H30-000	**100360460**	-	-
An400 Burgman L2	400	2012	2012	CG111\CG113\CG114	21501-05H30-000	**100360460**	-	-
An400 Burgman L3	400	2013	2013	CG111\CG113\CG114	21501-05H30-000	**100360460**	-	-
An400 Burgman L4	400	2014	2014	CG111\CG113\CG114	21501-05H30-000	**100360460**	-	-
An400 Burgman L5	400	2015	2015	CG111\CG113\CG114	21501-05H40-000	**100360460**	-	-
An400 Burgman L6	400	2016	2016	CG111\CG113\CG114	21501-05H41-000	**100360460**	-	-
An400 Burgman X-K2	400	1999	2002	AU111	21501-15F01-000	**100360110**	-	-
SYM								
Symphony S 50 Euro4	50	2018	2019	AY05W8-EU	22300AWA010	**100360621**	22100M5Q000	**100260321**
Crox 50 Euro4	50	2017	2017	AE05W6-RU	22300AWA010	**100360621**	22100M5Q000	**100260321**
Crox 50 Euro4	50	2018	2018	AE05WA-EU	22300AWA010	**100360621**	22100M5Q000	**100260321**
Fiddle Ii S	50	2009	2010	AF05W-T	-	-	22100M5Q000	**100260321**
Fiddle Ii S	50	2011	2013	AF05W2-T	22300AWA000	**100360621**	22100M5Q000	**100260321**
Fiddle Iii	50	2014	2014	XA05W1-IT	22300AWA000	**100360621**	22100M5Q000	**100260321**
Jet4	50	2009	2010	AD05W1-6	22300AWA000	**100360621**	22100M5Q000	**100260321**
Mio	50	2006	2007	HU05W-6	-	-	22100M5Q000	**100260321**
Mio	50	2009	2009	HU05WA-T	-	-	22100M5Q000	**100260321**
Mio 50 Euro4	50	2018	2018	FS05W1-EU	22300AWA010	**100360621**	22100M5Q000	**100260321**
Simply Ii	50	2014	2014	AE05W-T	-	-	22100M5Q000	**100260321**
Symphony S	50	2010	2010	AY05W2-T	22300AWA000	**100360621**	22100M5Q000	**100260321**
Symphony S	50	2011	2011	AY05W4-T	22300AWA000	**100360621**	22100M5Q000	**100260321**
Symphony S	50	2012	2014	AY05W6-T	22300AWA000	**100360621**	22100M5Q000	**100260321**
Symphony Sr	50	2010	2010	AZ05W1-T	22300AWA000	**100360621**	22100M5Q000	**100260321**
Symphony Sr	50	2011	2011	AZ05W4-T	22300AWA000	**100360621**	22100M5Q000	**100260321**
Symphony Sr	50	2012	2014	AZ05W6-T	22300AWA000	**100360621**	22100M5Q000	**100260321**
Symphony St	50	2015	2015	XB05W1-EU	22300AWA000	**100360621**	22100M5Q000	**100260321**
Symphony St 50 Euro4	50	2018	2018	XB05W4-EU	22300AWA010	**100360621**	22100M5Q000	**100260321**
X Pro	50	2013	2013	AE05W4-EU	22300AWA000	**100360621**	22100M5Q000	**100260321**
Gts 250	250	2006	2007	LM25W-6	22300HMB000	**100360581**	22101HMA000	**100260311**
Gts 250	250	2007	2008	LM25W-P	-	-	22101HMA000	**100260311**
Joymax	250	2005	2007	LM25W-6\LM25W-T	-	-	22101HMA000	**100260311**
Joymax Euro3 I	250	2007	2008	LM25W1-T	22300HMB000	**100360581**	22101HMA000	**100260311**
Quad Lander	250	2006	2007	UA25A-6	-	-	22101HMA000	**100260311**
Citycom	300	2008	2009	LH30W-6	22300HMB000	**100360581**	22101HMA000	**100260311**
Citycom Efi	300	2010	2011	LH30W-6	22300HMB000	**100360581**	22101HMA000	**100260311**
Citycom I Cbs	300	2012	2012	LH30W-6	22300HMB000	**100360581**	22101HMA000	**100260311**
Citycom I S Euro4	300	2017	2018	LL30W2-EU	-	-	22101HMA000	**100260311**
Citycom S 300 I Cbs	300	2015	2015	LL30W1-EU	-	-	22101HMA000	**100260311**
Joymax Evo	300	2009	2009	LM30W-6	22300HMB000	**100360581**	22101HMA000	**100260311**
Joymax Evo I	300	2010	2010	LM30W-T	22300HMB000	**100360581**	22101HMA000	**100260311**
Joymax I	300	2012	2012	LN30W1-T	22300HMB000	**100360581**	22101HMA000	**100260311**
Joymax I	300	2014	2014	LN30W2-IT	-	-	22101HMA000	**100260311**
Joymax I Abs	300	2013	2014	LN30W6-IT	-	-	22101HMA000	**100260311**
Joymax I Sport Abs-S&S Euro4	300	2017	2017	LN30WA-EU	-	-	22101HMA000	**100260311**
Quad Lander	300	2008	2008	UA30A1-6	-	-	22101HMA000	**100260311**
Quad Lander S	300	2007	2008	UA30A-6	-	-	22101HMA000	**100260311**



Modello *Model*	**CC**	**Da** *From*	**A** *To*	**Telaio** *Frame*	**OEM Girante** *OEM Clutch*	**Codice RMS Girante** *RMS Clutch Code*	**OEM Campana** *OEM Clutch Bell*	**Codice RMS Campana** *RMS Clutch Bell Code*
YAMAHA								
Bw'S	100	1999	2001	SB021	3XYE66200100	**100360571**	-	**-**
Gpd125A N-Max	125	2015	2018	SE931	2DSE66200000	**100360611**	2DPE66110000	**100260301**
Vp X-City	125	2008	2011	SE431	1B9E66200200	**100360390**	-	**-**
Xq Maxster	125	2001	2002	SE051	5DSE66200000	**100360061**	5DSE66110000	**100260281**
Yp125 Majesty	125	1998	2002	SE021	5DSE66200000	**100360061**	5DSE66110000	**100260281**
Yp125R X-Max	125	2006	2014	SE321	1B9E66200000	**100360390**	-	**-**
Yp125R X-Max	125	2015	2016	SE681\SE686	1B9E66201000	**100360390**	-	**-**
Yp125R X-Max Abs	125	2011	2011	SE544	1B9E66200000	**100360390**	-	**-**
Yp125Ra X-Max Abs	125	2013	2013	SE644	1B9E66200200	**100360390**	-	**-**
Yp125Ra X-Max Abs	125	2014	2017	SE684	1B9E66201000	**100360390**	-	**-**
Gpd150-A N-Max	150	2017	2018	SG431	-	**-**	2DPE66110000	**100260301**
Yp150 Majesty	150	2000	2000	SG051	5KD166200000	**100360090**	-	**-**
Vp X-City	250	2007	2015	SG191	-	**-**	5GM166110000	**100260080**
Yp250 Majesty	250	2000	2001	SG041	-	**-**	5GM166110000	**100260080**
Yp250 Majesty	250	2002	2003	SG048	5GM166200000	**100360070**	5GM166110000	**100260080**
Yp250 Majesty Abs	250	2003	2003	SG04B	5GM166200000	**100360070**	5GM166110000	**100260080**
Yp250R Black X-Max	250	2009	2009	SG162	-	**-**	5GM166110000	**100260080**
Yp250R X-Max	250	2005	2016	SG161	-	**-**	5GM166110000	**100260080**
Yp250R X-Max Sport	250	2011	2012	SG224	-	**-**	5GM166110000	**100260080**
Yp250Ra X-Max Abs	250	2011	2016	SG222	-	**-**	5GM166110000	**100260080**
Xc Versity	300	2003	2006	SH011	-	**-**	5GM166110000	**100260080**
Yp400 Majesty	400	2004	2006	SH021\4\SH025\6	5RU166201000	**100360350**	-	**-**
Yp400 Majesty	400	2007	2008	SH051\SH052	5RU166202000	**100360400**	-	**-**
Yp400 Majesty Abs	400	2007	2008	SH054	5RU166202000	**100360400**	-	**-**



CAMPANE FRIZIONE

CLUTCH BELLS

100260010

100260011

APRILIA: R.O. 289933
DERBI: R.O. 289933
GILERA: R.O. 289933
PIAGGIO: R.O. 289933



100260020

APRILIA: R.O. AP8206135
MALAGUTI: R.O. 72604800
MBK: R.O. 3YJ166110000



100260030

APRILIA: R.O. AP2MDA000426
MALAGUTI: R.O. 72602700 - 72607500
MBK: R.O. 5JHE66110000



100260040

APRILIA: R.O. AP8550351
PIAGGIO: R.O. 482693 - 82503R



100260050

APRILIA: R.O. AP8577095 - AP8580112
DERBI: R.O. 82517R
GILERA: R.O. 82517R



100260080

MBK: R.O. 5GM166110000
YAMAHA: R.O. 5GM166110000



100260111

HONDA: R.O. 22101KCW850
KYMCO: R.O. 00127782 - 00127702
MALAGUTI: R.O. 52601300 - 52602200



100260170

APRILIA: R.O. AP8560026
GILERA: R.O. 8251765



100260180

APRILIA: R.O. AP0259662





100260191

APRILIA: R.O. 8440494 - 844049
DERBI: R.O. 8440494 - 82751R - 844049
GILERA: R.O. 82517R - 8440494



100260210

HONDA: R.O. 22100KFG000
PIAGGIO: R.O. 496297



100260261

PIAGGIO: R.O. B016908



100260271

PIAGGIO: R.O. 880623



100260281

YAMAHA: R.O. 5DSE66110000



100260290 NEW

KYMCO: R.O. 00122150



100260301 NEW

YAMAHA: R.O. 2DPE66110000



100260311 NEW

SYM: R.O. 22101HMA000



100260321 NEW

SYM: R.O. 22100M5Q000





CAMPANE FRIZIONE VENTILATE - *VENTILATED CLUTCH OUTER*

100260150

MOTORI MINARELLI 50 CC Ø 107 | *MINARELLI ENGINE*

MBK - MINARELLI - YAMAHA



100260160

MOTORI PIAGGIO 50 CC Ø 107 | *PIAGGIO ENGINE*

GILERA - PIAGGIO





100360010

APRILIA: R.O. AP8550407
PIAGGIO: R.O. 4838335



100360020

BENELLI: R.O. R13440631A0
GILERA: R.O. 829184
PIAGGIO: R.O. 829184



100360050

DERBI: R.O. CM144012
GILERA: R.O. 827394
PIAGGIO: R.O. CM144012



100360061

BENELLI: R.O. R16141031A0
MALAGUTI: R.O. 73503300
MBK: R.O. 5DSE66200000
YAMAHA: R.O. 5DSE66200000



100360070

MBK: R.O. 5GM166200100
YAMAHA: R.O. 5GM166200100



100360090

MALAGUTI: R.O. 73503600
MBK: R.O. 5KDE66200000
YAMAHA: R.O. 5KD166200000



100360100

HONDA: R.O. 22535KFG000



100360110

PIAGGIO: R.O. 496302
SUZUKI: R.O. 21501-15F01-000



100360120

SUZUKI: R.O. 21501-14F02-000





100360130

APRILIA: R.O. AP0259739



100360140

APRILIA: R.O. AP0259738



100360160

100360161

HONDA: R.O. 22535KGF910
MALAGUTI: R.O. 53500200 - 53500400
MZ/MUZ



100360171

KYMCO: R.O. 00127961



100360300

PEUGEOT: R.O. 754144



100360320

APRILIA: R.O. AP8560053
PIAGGIO: R.O. 826053



100360330

APRILIA: R.O. AP8575014 - AP8590027
GILERA: R.O. CM1612035 - CM1440075
PIAGGIO: R.O. CM1612035 - CM1440075

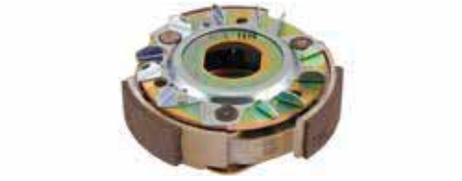

100360350

YAMAHA: R.O. 5RU166201000



100360360

KYMCO: R.O. 00127965





100360370

SUZUKI: R.O. 21501-20E60-000



100360381

APRILIA: R.O. CM161202 - CM144005
DERBI: R.O. 829184 - CM144005
GILERA: R.O. CM161202 - CM144005
PIAGGIO: R.O. CM161202 - CM144005



100360390

YAMAHA: R.O. 1B9E66200200 - 1B9E66200000 - 1B9E66201000



100360400

YAMAHA: R.O. 5RU166202000



100360411 NEW

APRILIA: R.O. CM144021 - AP8577092
DERBI: R.O. CM1440175 - 8722515
GILERA: R.O. CM1440175
PIAGGIO: R.O. 8722515 - CM1440175 - CM144017 - CM1440195



100360421

APRILIA: R.O. 848844 - AP8560246
GILERA: R.O. 842343 - 8405775
PIAGGIO: R.O. 848844 - 8405775



100360431

SUZUKI: R.O. 21501-46G10-000



100360440

SUZUKI: R.O. 21501-46G20-000



100360450

SUZUKI: R.O. 21501-03H10-000 - 21501-03H30-000





100360460

SUZUKI: R.O. 21501-05H30-000



100360480

KYMCO: R.O. 00105099



100360490

KYMCO: R.O. 00107100C



100360510

PIAGGIO: R.O. CM1672015



100360521 NEW

APRILIA: R.O. CM161201 - CM1612015
DERBI: R.O. CM1612015 - CM161201
PIAGGIO: R.O. CM1440025 - CM1612015



100360530

KYMCO: R.O. 00122170



100360541

PIAGGIO: R.O. B016913 - B0191905



100360551

APRILIA: R.O. CM1002025
DERBI: R.O. CM1002025
GILERA: R.O. CM1002025
PIAGGIO: R.O. CM1002025



100360561

PIAGGIO: R.O. CM163802 - CM1672015





100360571

MBK: R.O. 3XYE66200100
YAMAHA: R.O. 3XYE66200100



100360581

SYM: R.O. 22300HMB000



100360591

MALAGUTI: R.O. 73502300 - 73503000



100360600 NEW

F.C.C.

KYMCO: R.O. 00122241



100360611 NEW

YAMAHA: R.O. 2DSE66200000



100360621 NEW

SYM: R.O. 22300AWA000



GIRANTI FRIZIONE RACING - *RACING CLUTCH ASSY*

100360190

100360191

Ø 105 mm
REGOLABILE | *ADJUSTABLE*

MOTORI MINARELLI - YAMAHA
Fino al 1997 - *Till 1997*



100360201

MOTORI MINARELLI - YAMAHA - GILERA - PIAGGIO
Dal 1998 - *From 1998*



100360210

Ø 105 mm
RACING MASSE ALLEGGERITE | *LIGHT WEIGHT RACING CLUTCH*

MOTORI MINARELLI - YAMAHA
Fino al 1998 - *Till 1998*



100360220

Ø 107 mm
RACING MASSE ALLEGGERITE | *LIGHT WEIGHT RACING CLUTCH*

MOTORI MINARELLI - YAMAHA - GILERA - PIAGGIO
Dal 1998 - *From 1998*



100360230

Ø 107 mm

MOTORI MINARELLI - MBK - YAMAHA - GILERA - PIAGGIO
Dal 1998 - *From 1998*



100360240

Ø 105 mm

MOTORI MINARELLI - MBK - YAMAHA
Fino al 1997 - *Till 1997*



100360250

Ø 110 mm

MOTORI FRANCO MORINI 50 - ATALA - CAGIVA - DERBY - ITALJET - MALAGUTI - MBK - SUZUKI - YAMAHA





100370010

HONDA 125-150: SH • Nes Chiocciola • Dylan • Phanteon 4T
KYMCO 125: Heroism • Movie 99-00 • Movie XL 99-00 • People 99-00 • People Eu2 03 • Vivio 00
KYMCO 150: Heroism 95-97 • Movie XL Eu2 03 • People 99-00 • People Eu2 03 • Vivio 00
MALAGUTI 125-150: Ciak 00-02 • Ciak Restyling Eu2 03 • Ciak Master 04



100370020

HONDA 250: Foresight 98>
HONDA 300: SH i 07-08
PEUGEOT 250: SV 01-02
PIAGGIO 250: X9 00-01



CINGHIE DI TRASMISSIONE DAYCO - *DAYCO TRANSMISSION BELTS*

Modello *Model*	CC	Da *From*	A *To*	DAYCO Standard	DAYCO Confezione Industriale *Industrial Packing*	DAYCO Kevlar	Codice RMS *RMS Code*	OEM
APRILIA								
Amico	50	1994	1994	**163750080**	**163750089**	**163750082**	**163750081**	AP8206109
Amico	50	1996	1998	**163750080**	**163750089**	**163750082**	**163750081**	AP8206109
Amico Gl-Gle	50	1993	1995	**163750080**	**163750089**	**163750082**	**163750081**	AP8206109
Amico Lx- Sport-Cat	50	1992	1993	**163750080**	**163750089**	**163750082**	**163750081**	AP8206109
Area 51	50	1998	2000	**163750080**	**163750089**	**163750082**	**163750081**	AP8206109
Gulliver	50	1995	1998	**163750080**	**163750089**	**163750082**	**163750081**	AP8206109
Gulliver Lc	50	1996	1998	**163750080**	**163750089**	**163750082**	**163750081**	AP8206109
Mojito Custom	50	1999	2003	**163750320**	-	-	**163750321**	AP2MCA000014
Mojito Custom 2T Motore Piaggio	50	2004	2010	**163750250**	**163750259**	**163750252**	-	436864
Mojito Retro	50	1999	2003	**163750320**	-	-	**163750321**	AP2MCA000014
Rally	50	1995	2003	**163750080**	**163750089**	**163750082**	**163750081**	AP8206109
Rally Liquid Cooled	50	1996	1999	**163750080**	**163750089**	**163750082**	**163750081**	AP8206109
Scarabeo	50	1993	2005	**163750080**	**163750089**	**163750082**	**163750081**	AP8206109
Scarabeo 2T	50	2014	2014	**163750060**	**163750069**	-	**163750061**	480852
Scarabeo 2T Eu2 Motore Piaggio	50	2010	2012	**163750060**	**163750069**	-	**163750061**	82712R
Scarabeo 2T Net	50	2009	2010	**163750060**	**163750069**	-	**163750061**	82712R
Scarabeo 4T	50	2002	2006	**163750060**	**163750069**	-	**163750061**	AP8570076
Scarabeo 4T 4V	50	2010	2012	**163750060**	**163750069**	-	**163750061**	82712R
Scarabeo 4T 4V	50	2014	2014	**163750060**	**163750069**	-	**163750061**	82712R
Scarabeo 4T 4V Net	50	2009	2010	**163750060**	**163750069**	-	**163750061**	82712R
Scarabeo 4T Restyling Eu3	50	2006	2009	**163750060**	**163750069**	-	**163750061**	82712R
Scarabeo Classic 2T Carb. Euro 4	50	2018	2018	**163750250**	**163750259**	**163750252**	-	436864
Scarabeo Ditech	50	2001	2004	**163750320**	-	-	**163750321**	AP2MCA000014
Scarabeo Quattro	50	2009	2009	**163750060**	**163750069**	-	**163750061**	82712R
Scarabeo Street	50	2005	2006	**163750060**	**163750069**	-	**163750061**	AP8570124
Scarabeo Street 2T Carb. Euro 4	50	2018	2018	**163750250**	**163750259**	**163750252**	-	436864
Scarabeo Street 2T Restyling	50	2006	2009	**163750060**	**163750069**	-	**163750061**	82712R
Sonic	50	1998	2007	**163750110**	-	-	-	AP8206818
Sonic Gp	50	1998	2008	**163750110**	-	-	-	AP8206818
Sport City One 2T	50	2008	2011	**163750060**	**163750069**	-	**163750061**	82712R
Sport City One 4T	50	2008	2010	**163750060**	**163750069**	-	**163750061**	82712R
Sr	50	1993	1996	**163750080**	**163750089**	**163750082**	**163750081**	AP8206109
Sr Ditech Euro 2	50	2002	2004	**163750320**	-	-	**163750321**	AP2MCA000014
Sr H2O Ditech E Carburatore	50	2000	2004	**163750320**	-	-	**163750321**	AP2MCA000014
Sr Iniezione E Carburatore	50	2014	2014	**163750250**	**163750259**	**163750252**	-	436864
Sr Iniezione E Carburatore	50	2014	2014	**163750250**	**163750259**	**163750252**	-	833982
Sr Liquid Cooled	50	1994	1996	**163750080**	**163750089**	**163750082**	**163750081**	AP8206109
Sr Motard 2T	50	2012	2014	**163750060**	**163750069**	-	**163750061**	480852
Sr Motard 4T 4V	50	2013	2014	**163750060**	**163750069**	-	**163750061**	480852
Sr R Factory Ie E Carburatore	50	2010	2014	**163750250**	**163750259**	**163750252**	-	436864
Sr R Factory Ie E Carburatore	50	2010	2014	**163750250**	**163750259**	**163750252**	-	833982
Sr R Factory Motore Aprilia	50	2005	2005	**163750320**	-	-	**163750321**	AP2MCA000014
Sr R H2O 2T Euro 4	50	2018	2018	**163750250**	**163750259**	**163750252**	-	436864
Sr R, R Factory	50	2004	2009	**163750250**	**163750259**	**163750252**	-	436864
Sr R, R Factory	50	2004	2009	**163750250**	**163750259**	**163750252**	-	833982
Sr Stealth, Racing	50	1997	2000	**163750080**	**163750089**	**163750082**	**163750081**	AP8206109
Sr Street	50	2003	2012	**163750250**	**163750259**	**163750252**	-	AP8515110
Sr Www	50	1997	2001	**163750080**	**163750089**	**163750082**	**163750081**	AP8206109
Scarabeo 4T	100	2001	2005	-	-	**163750630**	-	AP8551053
Scarabeo 4T	100	2010	2012	-	-	**163750630**	-	82646R
Scarabeo 4T	100	2014	2014	-	-	**163750630**	-	82646R
Scarabeo 4T Net	100	2009	2009	-	-	**163750630**	-	82646R
Scarabeo 4T Net Eu3	100	2010	2010	-	-	**163750630**	-	82646R

Modello *Model*	CC	Da *From*	A *To*	DAYCO Standard	DAYCO Confezione Industriale *Industrial Packing*	DAYCO Kevlar	Codice RMS *RMS Code*	OEM
Scarabeo 4T Restyling	100	2006	2009	-	-	**163750630**	-	82646R
Scarabeo Motore Minarelli	100	2000	2000	**163750620**	-	-	-	AP8510802
Scarabeo Motore Yamaha	100	2000	2000	**163750620**	-	-	-	AP8510604
Atlantic	125	2003	2005	-	**163750389**	**163750380**	-	AP8580247
Atlantic Eu3	125	2010	2012	-	**163750389**	**163750380**	-	841213
Atlantic Eu3 125-250	125	2006	2008	-	**163750389**	**163750380**	-	AP8580247
Leonardo	125	1998	2002	-	-	**163750580**	-	AP0280102
Leonardo St	125	2001	2004	-	-	**163750580**	-	AP0280102
Mojito	125	2003	2007	-	**163750389**	**163750380**	-	AP8580247
Mojito	125	2008	2008	-	**163750389**	**163750380**	-	841213
Mojito Retro' - Custom	125	1999	2001	**163750260**	-	-	-	AP8550363
Scarabeo	125	2003	2003	-	-	**163750600**	-	AP8575028
Scarabeo	125	2004	2006	-	-	**163750600**	-	AP8575042
Scarabeo Motore Piaggio Eu3	125	2006	2006	-	-	**163750600**	-	AP8575042
Scarabeo Motore Rotax	125	1999	2004	-	-	**163750580**	-	AP0280102
Sport City	125	2004	2006	-	-	**163750600**	-	AP8575042
Sport City Cube	125	2008	2010	-	-	**163750600**	-	842009
Sport City Euro3	125	2006	2008	-	-	**163750600**	-	AP8575042
Sport City One 4T Euro3	125	2008	2011	-	**163750389**	**163750380**	-	841213
Sport City Street	125	2012	2012	-	-	**163750600**	-	842009
Sr	125	1999	2001	**163750190**	-	-	-	AP8550130
Sr Max	125	2011	2014	-	**163750389**	**163750380**	-	841213
Sr Motard	125	2012	2014	-	**163750389**	**163750380**	-	841213
Leonardo	150	1998	1998	-	-	**163750580**	-	AP0280102
Atlantic	200	2003	2005	-	**163750669**	**163750660**	-	AP8580246
Scarabeo	200	2003	2003	-	-	**163750690**	-	AP8575029
Atlantic	250	2003	2005	**163750810**	-	**163750812**	-	AP8580261
Atlantic Eu3 125-250	250	2006	2008	**163750810**	-	**163750812**	-	AP8580261
Leonardo	250	1999	2004	-	**163750659**	**163750650**	-	AP8122639
Leonardo St	250	2001	2001	-	**163750659**	**163750650**	-	AP8122639
Atlantic	300	2010	2012	**163750810**	-	**163750812**	-	82941R
Sr Max	300	2011	2014	**163750810**	-	**163750812**	-	82941R
Atlantic Sprint 400-500	400	2005	2008	-	-	**163750680**	-	AP8560188
Scarabeo Light 400-500	400	2006	2008	-	-	**163750680**	-	832738
Atlantic	500	2003	2004	-	-	**163750680**	-	AP8560188
Scarabeo	500	2003	2006	-	-	**163750680**	-	AP8560188
ARCTIC								
Dvx 250	250	2006	2006	-	-	**163750720**	-	3303-782
BAOTIAN								
Baotian Scooter Bt 49Q 7-9-11	50	-	-	-	-	-	**163751211**	-
Bt49Qt-12A1 50 4T Warrior/Rebel	50	2006	2017	**163750330**	-	**163750332**	-	114001-139QMA-0100
Bt49Qt-12C1 50 4T Rebel	50	2006	2017	**163750330**	-	**163750332**	-	114001-139QMA-0100
Bt49Qt-12D1 50 4T Hero	50	2007	2017	**163750330**	-	**163750332**	-	114001-139QMA-0100
Bt49Qt-12E3 50 4T Rocky	50	2007	2017	**163750330**	-	**163750332**	-	114001-139QMA-0100
Bt49Qt-12F1 50 4T Tanco	50	2007	2017	**163750330**	-	**163750332**	-	114001-139QMA-0100
Bt49Qt-12G1 50 4T	50	2009	2017	**163750330**	-	**163750332**	-	114001-139QMA-0100
Bt49Qt-12P1 50 4T Tiger	50	2008	2017	**163750330**	-	**163750332**	-	114001-139QMA-0100
Bt49Qt-12P2 50 4T	50	2008	2017	**163750330**	-	**163750332**	-	114001-139QMA-0100
Bt49Qt-20A2 50 4T Terminator	50	2009	2012	**163750330**	-	**163750332**	-	114001-139QMA-0100

Modello *Model*	CC	Da *From*	A *To*	DAYCO Standard	DAYCO Confezione Industriale *Industrial Packing*	DAYCO Kevlar	Codice RMS *RMS Code*	OEM
Bt49Qt-2A 50 4T Big Panther	50	2006	2017	**163750330**	-	**163750332**	-	114001-139QMA-0100
Bt49Qt-2C 50 4T Falcon	50	2009	2017	**163750330**	-	**163750332**	-	114001-139QMA-0100
Bt49Qt-6A4 50 4T	50	2013	2017	**163750330**	-	**163750332**	-	114001-139QMA-0100
Bt49Qt-6B4 50 4T	50	2009	2017	**163750330**	-	**163750332**	-	114001-139QMA-0100
Bt49Qt-9F3 50 4T	50	2009	2017	**163750330**	-	**163750332**	-	114001-139QMA-0100
Bt49Qt-9R3 50 4T	50	2009	2017	**163750330**	-	**163750332**	-	114001-139QMA-0100
Bt49Qt-9S3 50 4T	50	2009	2017	**163750330**	-	**163750332**	-	114001-139QMA-0100
Gyg Motori 4T	50	-	-	**163751000**	-	-	-	-
BENELLI								
491 Gt	50	1998	1999	**163750080**	**163750089**	**163750082**	**163750081**	R16140011A0
491 Racing	50	1998	1999	**163750080**	**163750089**	**163750082**	**163750081**	R16140011A0
491 Rr	50	1999	2001	**163750080**	**163750089**	**163750082**	**163750081**	R16140011A0
491 Sp	50	1999	1999	**163750080**	**163750089**	**163750082**	**163750081**	R16140011A0
491 Sport	50	1998	1999	**163750080**	**163750089**	**163750082**	**163750081**	R16140011A0
491 St	50	1999	2001	**163750080**	**163750089**	**163750082**	**163750081**	R16140011A0
K2	50	1998	2001	**163750080**	**163750089**	**163750082**	**163750081**	R16140011A0
K2 Liquid Cooled	50	1998	2001	**163750080**	**163750089**	**163750082**	**163750081**	R16140011A0
Naked	50	2002	2002	**163750080**	**163750089**	**163750082**	**163750081**	R16140011A0
Pepe	50	1999	2001	**163750080**	**163750089**	**163750082**	**163750081**	R16140011A0
Pepe Lx	50	2003	2004	**163750080**	**163750089**	**163750082**	**163750081**	R16140011A0
K2	100	1999	2001	**163750620**	-	-	-	R16140641A0
Adiva 125-150	125	2001	2002	-	**163750389**	**163750380**	-	R13440941A0
Velvet 125-150	125	1999	2001	-	-	**163750300**	-	R16140631A0
Velvet Touring 125-150	125	2002	2003	-	-	**163750300**	-	R16140631A0
Adiva 125-150	150	2001	2002	-	**163750389**	**163750380**	-	R13440941A0
Velvet 125-150	150	1999	2001	-	-	**163750300**	-	R16140631A0
Velvet Touring 125-150	150	2002	2003	-	-	**163750300**	-	R16140631A0
Velvet	250	1999	2001	-	**163750659**	**163750650**	-	R16040171A0
Velvet Touring	250	2002	2003	-	**163750659**	**163750650**	-	R16040171A0
CAGIVA								
Cucciolo	125	2000	2000	**163750260**	-	-	-	800093625
DAELIM								
Message 50	50	1998	1999	**163750210**	-	-	-	23100-GZ5-0030-H1
Sq 250 S2	250	2006	2009	-	-	**163750720**	-	23100-SZ1-9000
DERBI								
Atlantis	50	1999	2001	**163750180**	-	-	-	00G02605371
Atlantis 2T	50	2010	2010	**163750250**	**163750259**	**163750252**	-	436864
Atlantis 2T Eu2	50	2007	2009	**163750250**	**163750259**	**163750252**	-	436864
Atlantis Lc	50	1999	2001	**163750180**	-	-	-	00G02605371
Atlantis O2	50	2002	2002	**163750250**	**163750259**	**163750252**	-	436864
Atlantis O2 Bullet	50	2003	2005	**163750250**	**163750259**	**163750252**	-	436864
Atlantis O2 City	50	2003	2006	**163750250**	**163750259**	**163750252**	-	436864
Atlantis O2 Red Bullet	50	2003	2003	**163750250**	**163750259**	**163750252**	-	436864
Atlantis O2 Two Chic	50	2005	2005	**163750250**	**163750259**	**163750252**	-	436864
Boulevard 2T	50	2009	2014	**163750060**	**163750069**	-	**163750061**	82712R
Gp1	50	2001	2003	**163750250**	**163750259**	**163750252**	-	436864
Gp1 E2	50	2003	2003	**163750250**	**163750259**	**163750252**	-	436864
Gp1 Euro2	50	2005	2005	**163750250**	**163750259**	**163750252**	-	436864
Gp1 Open Eu2	50	2006	2009	**163750250**	**163750259**	**163750252**	-	436864
Gp1 Race Eu2	50	2005	2007	**163750250**	**163750259**	**163750252**	-	436864
Hunter	50	1996	1997	**163750520**	-	-	-	00G02602371

Modello *Model*	CC	Da *From*	A *To*	DAYCO Standard	DAYCO Confezione Industriale *Industrial Packing*	DAYCO Kevlar	Codice RMS *RMS Code*	OEM
Paddock	50	1998	1999	**163750520**	-	-	-	00G02602371
Predator Lc	50	1998	2001	**163750180**	-	-	-	00G02605371
Predator O2	50	1998	2001	**163750180**	-	-	-	00G02605371
Sonar 2T	50	2009	2009	**163750060**	**163750069**	-	**163750061**	82712R
Vamos	50	1993	1995	**163750170**	-	-	-	00G02600371
Variant Sport 2T	50	2012	2012	**163750060**	**163750069**	-	**163750061**	82712R
Boulevard 125-150	125	2003	2004	-	**163750389**	**163750380**	-	832023
Boulevard 125-150 Eu2	125	2004	2007	-	**163750389**	**163750380**	-	841213
Boulevard 4T Eu3	125	2008	2012	-	**163750389**	**163750380**	-	841213
Gp1 Eu2	125	2006	2006	-	**163750389**	**163750380**	-	841213
Gp1 Low Seat 125 Eu3	125	2007	2008	-	**163750389**	**163750380**	-	841213
Rambla 125-250	125	2008	2009	-	-	**163750600**	-	842009
Rambla 125-250 E3 2Ver	125	2008	2008	-	-	**163750600**	-	842009
Sonar 4T	125	2009	2011	-	**163750389**	**163750380**	-	841213
Variant Sport 4T E3	125	2012	2012	-	**163750389**	**163750380**	-	841213
Boulevard 125-150	150	2002	2004	-	**163750389**	**163750380**	-	832023
Boulevard 125-150 Eu2	150	2004	2007	-	**163750389**	**163750380**	-	841213
Boulevard 4T E3	150	2010	2010	-	**163750389**	**163750380**	-	841213
Sonar 4T	150	2009	2009	-	**163750389**	**163750380**	-	841213
Boulevard Eu2	200	2005	2006	-	**163750669**	**163750660**	-	840908
Gp1	250	2006	2007	**163750810**	-	**163750812**	-	843963
Gp1 Low Seat 250 Eu3	250	2007	2008	**163750810**	-	**163750812**	-	843963
GARELLI								
Capri - Capri Lx	50	2006	2008	-	-	-	**163751211**	-
Ciclone	50	2006	2008	-	-	-	**163751211**	-
GILERA								
Dna	50	2000	2002	**163750060**	**163750069**	-	**163750061**	82712R
Dna	50	2005	2007	**163750060**	**163750069**	-	**163750061**	82712R
Dna Gp Experience	50	2003	2004	**163750060**	**163750069**	-	**163750061**	82712R
Easy Moving	50	1995	1996	**163750040**	**163750049**	**163750042**	**163750041**	431190
Ice	50	2001	2005	**163750250**	**163750259**	**163750252**	-	436864
Runner	50	1997	2000	**163750250**	**163750259**	**163750252**	-	436864
Runner Poggiali	50	2002	2002	**163750250**	**163750259**	**163750252**	-	436864
Runner Purejet	50	2002	2004	**163750250**	**163750259**	**163750252**	-	436864
Runner Purejet	50	2005	2007	**163750250**	**163750259**	**163750252**	-	833982
Runner Purejet	50	2010	2011	**163750250**	**163750259**	**163750252**	-	833982
Runner Purejet St	50	2008	2008	**163750250**	**163750259**	**163750252**	-	833982
Runner Sp	50	2002	2007	**163750250**	**163750259**	**163750252**	-	436864
Runner Sp	50	2010	2012	**163750250**	**163750259**	**163750252**	-	436864
Runner Sp Special Edition	50	2007	2007	**163750250**	**163750259**	**163750252**	-	436864
Runner Sp St & Simoncelli	50	2008	2009	**163750250**	**163750259**	**163750252**	-	436864
Stalker	50	1997	2011	**163750250**	**163750259**	**163750252**	-	436864
Stalker Naked	50	2008	2008	**163750250**	**163750259**	**163750252**	-	436864
Stalker Special Edition	50	2007	2008	**163750250**	**163750259**	**163750252**	-	436864
Storm	50	1994	1995	**163750010**	**163750019**	**163750012**	-	430728
Storm Euro2	50	2007	2007	**163750250**	**163750259**	**163750252**	-	436864
Typhoon	50	1994	1997	**163750010**	**163750019**	**163750012**	-	430728
Typhoon X	50	1998	1999	**163750010**	**163750019**	**163750012**	-	430728
Typhoon Xr	50	2000	2000	**163750250**	**163750259**	**163750252**	-	436864
Dna 125-180	125	2001	2001	-	**163750389**	**163750380**	-	487170
Nexus Euro3	125	2007	2008	-	**163750389**	**163750380**	-	841213
Nexus Euro3 Ie	125	2008	2010	-	**163750389**	**163750380**	-	841213
Runner 4T St Euro3	125	2008	2016	-	**163750389**	**163750380**	-	841213
Runner Fx-Fxr 125-180	125	1997	2002	**163750190**	-	-	-	434812
Runner Vx	125	2005	2006	-	**163750389**	**163750380**	-	841213
Runner Vx 4T Euro3	125	2006	2007	-	**163750389**	**163750380**	-	841213
Runner Vx Race	125	2006	2006	-	**163750389**	**163750380**	-	841213

Modello *Model*	**CC**	**Da** *From*	**A** *To*	**DAYCO** **Standard**	**DAYCO** **Confezione Industriale** *Industrial Packing*	**DAYCO** **Kevlar**	**Codice RMS** *RMS Code*	**OEM**
Runner Vx Sc	125	2006	2007	-	**163750389**	**163750380**	-	841213
Runner Vx-Vxr 125-180	125	2000	2001	-	**163750389**	**163750380**	-	832023
Runner Vx-Vxr 125-200	125	2002	2004	-	**163750389**	**163750380**	-	841213
Typhoon	125	1995	1998	**163750190**	-	-	-	434812
Typhoon X-Xr	125	1999	2000	**163750190**	-	-	-	434812
Runner Fx-Fxr 125-180	180	1997	2002	-	-	**163750200**	-	484497
Runner Vx-Vxr 125-180	180	2000	2001	-	**163750669**	**163750660**	-	832623
Dna 125-180	200	2001	2001	-	**163750669**	**163750660**	-	827639
Runner Vxr	200	2005	2006	-	**163750669**	**163750660**	-	840908
Runner Vxr 4T St Euro3	200	2008	2011	-	**163750669**	**163750660**	-	840908
Runner Vxr Euro3	200	2007	2007	-	**163750669**	**163750660**	-	840908
Runner Vxr Race	200	2005	2006	-	**163750669**	**163750660**	-	840908
Runner Vx-Vxr 125-200	200	2002	2004	-	**163750669**	**163750660**	-	840908
Nexus Euro3	250	2006	2007	**163750810**	-	**163750812**	-	82941R
Nexus Sp Euro3	250	2006	2007	**163750810**	-	**163750812**	-	82941R
Oregon	250	2006	2010	**163750810**	-	**163750812**	-	82941R
Nexus Euro3	300	2008	2011	**163750810**	-	**163750812**	-	82941R
Nexus	500	2003	2005	-	-	**163750680**	-	832738
Nexus Euro3	500	2006	2006	-	-	**163750680**	-	832738
Nexus Euro3	500	2009	2011	-	-	**163750680**	-	832738
Nexus Sp Euro3	500	2006	2007	-	-	**163750680**	-	832738
HERCULES								
Limbo 25 Ma	25	1995	1995	**163750150**	-	-	-	-
Sr 50 Samba	50	1994	1995	**163750150**	-	-	-	-
HONDA								
Nh 50 Ms Lead	50	1985	1995	**163750140**	-	-	**163750141**	-
Sa 50 Vision	50	1991	1995	**163750130**	-	-	-	23100-GN2-003
Sfx 50	50	1996	2000	**163750150**	-	-	-	23100-GW2-013
Sgx 50 Sky	50	1997	2000	-	-	-	**163750431**	23100-GBY-901
Sh 50 Scoopy	50	1996	2000	-	-	-	**163750431**	23100-GBY-901
Sj 50 Bali	50	1995	2001	**163750150**	-	-	-	23100-GW2-013
Srx 50 Shadow	50	1998	1999	**163750150**	-	-	-	23100-GW2-013
Sxr 50 Mm	50	1998	2000	**163750150**	-	-	-	23100-GW2-013
Szx 50 S Super Sport X8R	50	1998	2002	-	-	-	**163750431**	23100-GBY-901
Szx 50 X Cross Sport X8R	50	1998	2002	-	-	-	**163750431**	23100-GBY-901
Fes 125 A S-Wing Abs	125	2007	2013	**163750470**	**163750479**	-	-	23100-KGF-901
Fes 125 Pantheon	125	1998	2002	-	-	**163750310**	-	23100-KFF-900
Fes 125 Pantheon	125	2003	2004	**163750730**	**163750739**	-	-	23100-KGG-911
Fes 125 Pantheon Cbs	125	2003	2004	**163750730**	**163750739**	-	-	23100-KGG-911
Fes 125 Pantheon Cbs	125	2005	2007	**163750470**	**163750479**	-	-	23100-KGF-901
Fes 125 S-Wing	125	2007	2010	**163750470**	**163750479**	-	-	23100-KGF-901
Nes 125 @/ Arobase	125	2000	2006	**163750470**	**163750479**	-	-	23100-KGF-901
Pcx 125 Ww125	125	2013	2013	-	-	**163751302**	-	23100-KWN-901
Pcx 125 Ww125Ex2	125	2010	2014	-	-	**163751302**	-	23100-KWN-901
Pes 125 Ps I	125	2006	2013	**163750470**	**163750479**	-	-	23100-KGF-901
Ses 125 Dylan	125	2002	2006	**163750470**	**163750479**	-	-	23100-KGF-901
Sh 125	125	2001	2004	**163750470**	**163750479**	-	-	23100-KGF-901
Sh 125 Anc I Mode	125	2014	2016	-	-	**163751302**	-	23100-KWN-901
Sh 125 D I	125	2009	2009	**163750470**	**163750479**	-	-	23100-KGF-901
Sh 125 I	125	2005	2012	**163750470**	**163750479**	-	-	23100-KGF-901
Fes 150 Pantheon	150	1998	2002	-	-	**163750310**	-	23100-KFF-900
Fes 150 S-Wing	150	2007	2009	**163750730**	**163750739**	-	-	23100-KGG-911
Nes 150 @/ Arobase	150	2001	2006	**163750730**	**163750739**	-	-	23100-KGG-911
Pes 150 Ps I	150	2006	2010	**163750730**	**163750739**	-	-	23100-KGG-911
Sh 150	150	2001	2004	**163750730**	**163750739**	-	-	23100-KGG-911
Sh 150 I	150	2005	2008	**163750730**	**163750739**	-	-	23100-KGG-911
Cn 4T	250	-	-	**163750280**	-	-	-	23100-KM1-671

Modello *Model*	CC	Da *From*	A *To*	DAYCO Standard	DAYCO Confezione Industriale *Industrial Packing*	DAYCO Kevlar	Codice RMS *RMS Code*	OEM
Fes 250 Foresight	250	1998	2005	-	-	**163750780**	-	23100-KFG-005
Nss 250 Jazz	250	2001	2001	-	-	**163750780**	-	23100-KFG-005
Nss 250 Jazz	250	2003	2004	-	-	**163750780**	-	23100-KFG-005
Nss 250 Jazz Es	250	2001	2004	-	-	**163750780**	-	23100-KFG-005
Nss 300 A Forza Abs	300	2013	2017	-	-	**163751020**	-	23100-KTW-901
Nss 300 Forza	300	2013	2017	-	-	**163751020**	-	23100-KTW-901
Sh 300 A I Abs	300	2007	2009	-	-	**163751020**	-	23100-KTW-901
Sh 300 A I Abs	300	2011	2017	-	-	**163751020**	-	23100-KTW-901
Sh 300 I	300	2008	2009	-	-	**163751020**	-	23100-KTW-901
ITALJET								
Jet-Set 50	50	2002	2003	**163750250**	**163750259**	**163750252**	-	210436864
Torpedo 50 4T	50	2001	2003	**163750060**	**163750069**	-	**163750061**	210480852
Dragster 125	125	1999	2003	-	-	**163750300**	-	4871702090
Jet-Set 125	125	2002	2003	-	**163750389**	**163750380**	-	210487170
Jupiter 125	125	2002	2003	-	-	**163750300**	-	4871702090
Millennium 125	125	2000	2003	-	-	**163750300**	-	4871702090
Torpedo 125	125	1999	1999	**163750260**	-	-	-	210825059
Torpedo 125	125	1999	2003	-	-	**163750300**	-	4871702090
Torpedo 125	125	2000	2000	**163750260**	-	-	-	210825059
Torpedo 125	125	2001	2003	-	**163750389**	**163750380**	-	210487170
Dragster 180	180	1999	2003	-	-	**163750300**	-	4871702090
KAWASAKI								
Kvf Brute Force Cef-Cff-Cgf-Chf-Cjf	300	2014	2018	-	-	**163750720**	-	59011Y003
Kvf Ccf-Cdf	300	2012	2013	-	-	**163750720**	-	59011Y003
KEEWAY								
Atv 50 Ec2	50	2006	2006	**163751220**	-	-	-	24107B01F000
Atv Off Road	50	2007	2007	**163751220**	-	-	-	24107B01F000
F-Act	50	2007	2008	**163751220**	-	-	-	24107B01F000
F-Act Evo	50	2009	2009	**163751220**	-	-	-	24107B01F000
F-Act Evo Sport	50	2011	2011	**163751220**	-	-	-	24107B01F000
Flash	50	2007	2008	**163751220**	-	-	-	24107B01F000
Focus	50	2006	2006	**163751220**	-	-	-	24107B01F000
Goccia	50	2009	2009	**163751220**	-	-	-	24107B01F000
Hurricane	50	2006	2008	**163751220**	-	-	-	24107B01F000
Matrix	50	2006	2008	**163751220**	-	-	-	24107B01F000
Ry6	50	2010	2010	**163751220**	-	-	-	24107B01F000
Ry8	50	2008	2008	**163751220**	-	-	-	24107B01F000
Ry8 Sport	50	2007	2010	**163751220**	-	-	-	24107B01F000
X-Blade	50	2016	2016	**163751220**	-	-	-	24107B01F000
KYMCO								
Agility 2T R16	50	2010	2010	**163750330**	-	**163750332**	-	00107541
Agility 2T R16	50	2012	2012	**163750330**	-	**163750332**	-	00107541
Agility 4T Carry	50	2011	2011	**163750330**	-	**163750332**	-	00107541
Agility 4T R12	50	2007	2008	**163750330**	-	**163750332**	-	00107541
Agility 4T R16	50	2008	2009	**163750330**	-	**163750332**	-	00107541
Agility 4T R16	50	2012	2012	**163750330**	-	**163750332**	-	00107541
Agility Plus 2T	50	2014	2014	**163750330**	-	**163750332**	-	00107541
Agility Plus 4T	50	2014	2014	**163750330**	-	**163750332**	-	00107541
Agility R12	50	2005	2005	**163750330**	-	**163750332**	-	00107541
Agility R12 Ecs	50	2016	2016	**163750330**	-	**163750332**	-	00107541
Agility Rs	50	2009	2009	**163750330**	-	**163750332**	-	00107541
Agility Rs Naked 2T	50	2010	2010	**163750330**	-	**163750332**	-	00107541
B&W	50	2002	2002	**163750330**	-	**163750332**	-	00107541
B&W Euro2	50	2003	2003	**163750330**	-	**163750332**	-	00107541
Cx	50	1993	1993	**163750210**	-	-	-	00107006
Cx Super	50	1994	1997	**163750210**	-	-	-	00107006
Dink 50 4T	50	2007	2007	**163750330**	-	**163750332**	-	00107541

Modello *Model*	**CC**	**Da** *From*	**A** *To*	**DAYCO** **Standard**	**DAYCO** **Confezione Industriale** *Industrial Packing*	**DAYCO** **Kevlar**	**Codice RMS** *RMS Code*	**OEM**
Dink Classic Euro2	50	2003	2003	**163750330**	-	**163750332**	-	00107541
Dink Lc	50	1998	2002	**163750330**	-	**163750332**	-	00107541
Dj W	50	1994	2000	**163750210**	-	-	-	00107006
Dj X	50	1991	1992	**163750210**	-	-	-	00107006
Dj Y	50	1993	1993	**163750210**	-	-	-	00107006
Like 2T	50	2009	2009	**163750330**	-	**163750332**	-	00107541
Like 4T	50	2009	2009	**163750330**	-	**163750332**	-	00107541
People	50	1999	2000	**163750330**	-	**163750332**	-	00107541
People	50	2004	2004	**163750330**	-	**163750332**	-	00107541
People Euro2	50	2003	2003	**163750330**	-	**163750332**	-	00107541
People Euro2	50	2008	2008	**163750330**	-	**163750332**	-	00107541
People Euro2	50	2011	2011	**163750330**	-	**163750332**	-	00107541
People S	50	2005	2008	**163750330**	-	**163750332**	-	00107541
People S 4T	50	2006	2008	**163750330**	-	**163750332**	-	00107541
Super 8	50	2007	2007	**163750330**	-	**163750332**	-	00107541
Super 8 2T	50	2009	2009	**163750330**	-	**163750332**	-	00107541
Super 8 2T	50	2013	2013	**163750330**	-	**163750332**	-	00107541
Super 8 4T	50	2009	2009	**163750330**	-	**163750332**	-	00107541
Super 8 4T	50	2013	2013	**163750330**	-	**163750332**	-	00107541
Super 9	50	2000	2000	**163750330**	-	**163750332**	-	00107541
Super 9 Sport Euro2	50	2003	2004	**163750330**	-	**163750332**	-	00107541
Top Boy	50	1997	2000	**163750330**	-	**163750332**	-	00107541
Vitality 2T	50	2004	2004	**163750330**	-	**163750332**	-	00107541
Vitality 4T	50	2004	2004	**163750330**	-	**163750332**	-	00107541
Yup	50	2002	2002	**163750330**	-	**163750332**	-	00107541
Yup Euro2	50	2003	2003	**163750330**	-	**163750332**	-	00107541
Agility 4T	125	2006	2006	-	-	**163750442**	**163750441**	00127541
Agility 4T Euro3	125	2006	2008	-	-	**163750442**	**163750441**	00127541
Agility Carry	125	2011	2011	-	-	**163750442**	**163750441**	00127541
Agility Carry Euro4	125	2017	2017	-	-	**163750442**	**163750441**	00127541
Agility Plus	125	2014	2014	-	-	**163750442**	**163750441**	00127541
Agility Plus E4	125	2016	2016	-	-	**163750442**	**163750441**	00127541
Agility R16	125	2008	2009	-	-	**163750442**	**163750441**	00127541
Agility R16	125	2012	2012	-	-	**163750442**	**163750441**	00127541
Agility Rs	125	2009	2009	-	-	**163750442**	**163750441**	00127541
Like	125	2009	2009	-	-	**163750442**	**163750441**	00127541
Like Lx	125	2012	2012	-	-	**163750442**	**163750441**	00127541
Movie 125 Euro3	125	2006	2007	-	-	**163750442**	**163750441**	00127541
Movie Xl 125-150	125	2001	2001	-	-	**163750442**	**163750441**	00127541
Movie Xl 125-150 Euro2	125	2003	2004	-	-	**163750442**	**163750441**	00127541
People 125-150	125	1999	2000	-	-	**163750442**	**163750441**	00127541
People 125-150 Euro2	125	2003	2003	-	-	**163750442**	**163750441**	00127541
People Euro3	125	2007	2008	-	-	**163750442**	**163750441**	00127541
People Euro3	125	2011	2011	-	-	**163750442**	**163750441**	00127541
People One E4	125	2016	2016	-	-	**163750442**	**163750441**	00127541
People One I	125	2013	2013	-	-	**163750442**	**163750441**	00127541
People One I Dd	125	2015	2015	-	-	**163750442**	**163750441**	00127541
People S	125	2005	2005	-	-	**163750442**	**163750441**	00127541
People S Dd Euro3	125	2007	2008	-	-	**163750442**	**163750441**	00127541
Super 8	125	2008	2009	-	-	**163750442**	**163750441**	00127541
Agility R16	150	2008	2009	-	-	**163750442**	**163750441**	00127541
Movie 150 Euro3	150	2006	2007	-	-	**163750442**	**163750441**	00127541
Movie Xl 125-150	150	2001	2001	-	-	**163750442**	**163750441**	00127541
Movie Xl 125-150 Euro2	150	2003	2004	-	-	**163750442**	**163750441**	00127541
People 125-150	150	1999	2000	-	-	**163750442**	**163750441**	00127541
People 125-150 Euro2	150	2003	2003	-	-	**163750442**	**163750441**	00127541
B&W	250	2000	2000	-	-	**163750720**	-	00127998

Modello *Model*	CC	Da *From*	A *To*	DAYCO Standard	DAYCO Confezione Industriale *Industrial Packing*	DAYCO Kevlar	Codice RMS *RMS Code*	OEM
B&W Euro2	250	2003	2003	-	-	**163750720**	-	00127998
Grand Dink	250	2001	2002	-	-	**163750720**	-	00127998
Grand Dink Euro2	250	2003	2004	-	-	**163750720**	-	00127998
Kxr	250	2003	2004	-	-	**163750720**	-	00127998
Mxu	250	2005	2005	-	-	**163750720**	-	00127998
People Lc	250	2003	2004	-	-	**163750820**	-	00127543
People S	250	2006	2006	-	-	**163750820**	-	00127543
People S 250I	250	2007	2007	-	-	**163750820**	-	00127543
X Citing	250	2005	2005	-	-	**163750820**	-	00127543
Yup	250	2003	2003	-	-	**163750720**	-	00127998
Downtown 300I	300	2009	2009	-	-	**163751402**	-	00123257
Downtown Abs	300	2010	2010	-	-	**163751402**	-	00123257
Downtown Abs I	300	2011	2016	-	-	**163751402**	-	00123257
Downtown I	300	2011	2011	-	-	**163751402**	-	00123257
K-Xct I	300	2012	2012	-	-	**163751402**	-	00123375
K-Xct I Abs	300	2014	2014	-	-	**163751402**	-	00123375
Maxxer	300	2005	2006	-	-	**163750720**	-	00127998
Maxxer Onroad	300	2016	2016	-	-	**163750720**	-	00127998
Mxu	300	2005	2006	-	-	**163750720**	-	00127998
Mxu R	300	2010	2010	-	-	**163750720**	-	00127998
People Gti	300	2010	2011	-	-	**163751402**	-	00123257
People Gti	300	2014	2014	-	-	**163751402**	-	00123375
People Gti Abs	300	2012	2012	-	-	**163751402**	-	00123375
People Gti Abs	300	2014	2014	-	-	**163751402**	-	00123375
People Gti Abs E4	300	2016	2016	-	-	**163751402**	-	00123375
People S 300I	300	2008	2008	-	-	**163750820**	-	00127543
X-Town Abs	300	2016	2016	-	-	**163750820**	-	00127543
Downtown Abs E4	350	2016	2016	-	-	**163751402**	-	00123375
Downtown I Abs	350	2015	2015	-	-	**163751402**	-	00123375
X Citing	500	2005	2005	-	-	**163750880**	-	00127038
X Citing 500 R	500	2009	2009	-	-	**163750880**	-	00127038
X Citing 500I	500	2006	2008	-	-	**163750880**	-	00127038
X Citing 500I R	500	2007	2008	-	-	**163750880**	-	00127038
MALAGUTI								
Centro 4T	50	2008	2008	**163750060**	**163750069**	-	**163750061**	41701400
Centro Base	50	1993	1994	**163750080**	**163750089**	**163750082**	**163750081**	71700300
Centro SI	50	1994	1998	**163750080**	**163750089**	**163750082**	**163750081**	71700300
Centro SI 4T	50	2010	2010	**163750060**	**163750069**	-	**163750061**	41701400
Centro SI Kat	50	1999	2000	**163750080**	**163750089**	**163750082**	**163750081**	71700300
Ciak	50	1999	2000	**163750080**	**163750089**	**163750082**	**163750081**	71700500
Ciak Master 4T	50	2005	2006	**163750060**	**163750069**	-	**163750061**	41701400
Ciak Master Euro 2	50	2006	2006	**163750080**	**163750089**	**163750082**	**163750081**	71700300
Ciak Mono Euro 2	50	2003	2003	**163750080**	**163750089**	**163750082**	**163750081**	71700500
Ciak Mono Euro 2 2.3	50	2003	2003	**163750080**	**163750089**	**163750082**	**163750081**	71700500
Ciak Td	50	2000	2001	**163750080**	**163750089**	**163750082**	**163750081**	71700500
Crosser Cr1	50	1995	1998	**163750120**	-	-	-	60323800
F10 Ac	50	2008	2008	**163751150**	-	-	-	59015000
F10 Ac Eco	50	2009	2010	**163751150**	-	-	-	59015000
F10 Jet Line	50	1992	1998	**163750110**	-	-	-	71700100
F10 Kat	50	1999	2000	**163750110**	-	-	-	71700600
F10 Restyling Eu1	50	2001	2002	**163750110**	-	-	-	71700600
F10 Restyling Eu2-2.3	50	2003	2004	**163750110**	-	-	-	71700600
F10 Restyling Euro2	50	2002	2003	**163750110**	-	-	-	71700600
F12 Aria Restyling Euro 2	50	2006	2006	**163750080**	**163750089**	**163750082**	**163750081**	71700300
F12 Lc Restyling Euro 2	50	2006	2006	**163750080**	**163750089**	**163750082**	**163750081**	71700300
F12 Phantom	50	1994	1998	**163750080**	**163750089**	**163750082**	**163750081**	71700300
F12 Phantom Euro1	50	1999	2000	**163750080**	**163750089**	**163750082**	**163750081**	71700300

Modello *Model*	**CC**	**Da** *From*	**A** *To*	**DAYCO** **Standard**	**DAYCO** **Confezione Industriale** *Industrial Packing*	**DAYCO** **Kevlar**	**Codice RMS** *RMS Code*	**OEM**
F12 Phantom Lc	50	1994	1998	**163750080**	**163750089**	**163750082**	**163750081**	71700300
F12 Phantom Lc Euro1	50	1999	2000	**163750080**	**163750089**	**163750082**	**163750081**	71700300
F12 Phantom Lc Restyling Eu1	50	2001	2002	**163750080**	**163750089**	**163750082**	**163750081**	71700300
F12 Phantom Lc Restyling Eu2	50	2002	2002	**163750080**	**163750089**	**163750082**	**163750081**	71700300
F12 Phantom Lc Restyling Eu2-2.3	50	2003	2004	**163750080**	**163750089**	**163750082**	**163750081**	71700300
F12 Phantom Lc Twin Disks	50	1998	1998	**163750080**	**163750089**	**163750082**	**163750081**	71700300
F12 Phantom Restyling Eu1	50	2001	2002	**163750080**	**163750089**	**163750082**	**163750081**	71700300
F12 Phantom Restyling Eu2	50	2002	2002	**163750080**	**163750089**	**163750082**	**163750081**	71700300
F12 Phantom Restyling Eu2-2.3	50	2003	2004	**163750080**	**163750089**	**163750082**	**163750081**	71700300
F12R Phantom Ac	50	2007	2008	**163751150**	-	-	-	59015000
F12R Phantom Ac	50	2009	2010	**163751150**	-	-	-	59015000
F12R Phantom Lc	50	2007	2010	**163750080**	**163750089**	**163750082**	**163750081**	71700300
F15 Fire Fox	50	1996	1998	**163750080**	**163750089**	**163750082**	**163750081**	71700300
F15 Fire Fox Air Cooled	50	2005	2006	**163750080**	**163750089**	**163750082**	**163750081**	71700300
F15 Fire Fox Euro2	50	2002	2003	**163750080**	**163750089**	**163750082**	**163750081**	71700300
F15 Fire Fox Restyling Euro2-2.3	50	2003	2004	**163750080**	**163750089**	**163750082**	**163750081**	71700300
F15 Fire Fox Twin Disks & Special	50	1998	1999	**163750080**	**163750089**	**163750082**	**163750081**	71700300
F15 Fire Fox Twin Disks Digit Kat	50	1998	2000	**163750080**	**163750089**	**163750082**	**163750081**	71700300
F15 Lc Restyling Euro 2	50	2004	2005	**163750080**	**163750089**	**163750082**	**163750081**	71700300
F15 Lc-Tds Restyling Euro 1	50	2001	2001	**163750080**	**163750089**	**163750082**	**163750081**	71700300
Grizzly 4 Wheels	50	2004	2009	**163750110**	-	-	-	71700600
Yesterday - Yesterday Euro	50	1997	2000	**163750110**	-	-	-	71700100
Ciak	100	1999	2000	-	-	**163750390**	-	60330200
F12 Phantom	100	1999	2000	-	-	**163750390**	-	60330200
Blog	125	2009	2011	**163750730**	**163750739**	-	-	65044800
Centro Ie	125	2008	2009	**163750730**	**163750739**	-	-	65044800
Centro SI	125	2009	2011	**163750730**	**163750739**	-	-	65044800
Ciak	125	2000	2001	-	-	**163750550**	-	51700600
Ciak Master	125	2004	2004	-	-	**163750550**	-	51700600
Ciak Master Euro 3	125	2006	2006	-	-	**163750550**	-	51700600
Ciak Restyling Euro2	125	2003	2003	-	-	**163750550**	-	51700600
Madison	125	1999	2001	-	-	**163750300**	-	71700700
Madison 3	125	2006	2009	-	**163750389**	**163750380**	-	41701500
Madison R Restyling	125	2002	2002	-	-	**163750300**	-	71700700
Madison R Restyling Euro2	125	2003	2004	-	-	**163750300**	-	71700900
Phantom Max	125	2003	2003	-	-	**163750300**	-	71700900
Ciak	150	2000	2002	-	-	**163750550**	-	51700600
Ciak Master	150	2004	2004	-	-	**163750550**	-	51700600
Ciak Master	150	2004	2004	**163750080**	**163750089**	**163750082**	**163750081**	71700500
Ciak Restyling Euro2	150	2003	2003	-	-	**163750550**	-	51700600
Madison T	150	1999	2001	-	-	**163750300**	-	71700700
Blog	160	2009	2011	**163750730**	**163750739**	-	-	65044800
Centro Ie	160	2008	2009	**163750730**	**163750739**	-	-	65044800
Centro SI	160	2009	2011	**163750730**	**163750739**	-	-	65044800
Madison R	180	2001	2002	-	**163750669**	**163750660**	-	41700300
Madison S Restyling	200	2002	2002	-	**163750669**	**163750660**	-	41700300
Madison S Restyling Euro2	200	2003	2003	-	**163750669**	**163750660**	-	41700700
Phantom Max	200	2003	2003	-	**163750669**	**163750660**	-	41700700
Madison 3	250	2006	2009	**163750810**	-	**163750812**	-	41700900
Madison Rs Restyling	250	2004	2004	**163750810**	-	**163750812**	-	41700900
Madison S	250	1999	2001	-	**163750659**	**163750650**	-	91700200
Password	250	2005	2006	-	-	**163750560**	-	71701100
Password Eu3	250	2007	2008	-	-	**163750560**	-	71701100
Phantom Max	250	2004	2004	**163750810**	-	**163750812**	-	41700900
Spidermax Gt	500	2004	2005	-	-	**163750680**	-	41701100
Spidermax Gt Euro3	500	2006	2006	-	-	**163750680**	-	41701100

Modello *Model*	CC	Da *From*	A *To*	DAYCO Standard	DAYCO Confezione Industriale *Industrial Packing*	DAYCO Kevlar	Codice RMS *RMS Code*	OEM
MBK								
Cr Z Target	50	1991	1995	**163750110**	-	-	-	3WF176410000
Cs Mach G Euro1	50	2002	2003	**163750080**	**163750089**	**163750082**	**163750081**	5RNE76410000
Cs Mach G Euro2	50	2002	2004	**163750080**	**163750089**	**163750082**	**163750081**	5RNE76410000
Cw Booster	50	1990	1991	**163750080**	**163750089**	**163750082**	**163750081**	5RNE76410000
Cw Booster	50	2001	2002	**163750080**	**163750089**	**163750082**	**163750081**	5RNE76410000
Cw Booster	50	2004	2004	**163750080**	**163750089**	**163750082**	**163750081**	5RNE76410000
Cw Booster Naked	50	2003	2003	**163750080**	**163750089**	**163750082**	**163750081**	5RNE76410000
Cw Booster Spirit	50	1996	1998	**163750080**	**163750089**	**163750082**	**163750081**	5RNE76410000
Cw Booster Spirit (Ita)	50	1999	2000	**163750080**	**163750089**	**163750082**	**163750081**	5RNE76410000
Cw Booster Spirit Euro2	50	2002	2003	**163750080**	**163750089**	**163750082**	**163750081**	5RNE76410000
Cw L Booster	50	2001	2003	**163750080**	**163750089**	**163750082**	**163750081**	5RNE76410000
Cw L Booster Spirit	50	2003	2003	**163750080**	**163750089**	**163750082**	**163750081**	5RNE76410000
Cw R Booster Road (Ita)	50	1994	1995	**163750080**	**163750089**	**163750082**	**163750081**	5RNE76410000
Cw Rs Booster Ng	50	2001	2002	**163750080**	**163750089**	**163750082**	**163750081**	5RNE76411000
Cw Rs Booster Ng	50	2003	2003	**163750080**	**163750089**	**163750082**	**163750081**	5RNE76410000
Cw Rs Booster Ng (Ita)	50	1995	1999	**163750080**	**163750089**	**163750082**	**163750081**	5RNE76410000
Cw Rs Booster Ng Euro1	50	1999	2000	**163750080**	**163750089**	**163750082**	**163750081**	5RNE76411000
Cw Rsp Booster Rocket (Ita)	50	1997	1998	**163750080**	**163750089**	**163750082**	**163750081**	5RNE76411000
Cw Rsx Booster Track (Ita)	50	1996	1998	**163750080**	**163750089**	**163750082**	**163750081**	5RNE76410000
Cw Sp Booster Spirit Euro2	50	2002	2002	**163750080**	**163750089**	**163750082**	**163750081**	5RNE76410000
Ew Stunt	50	2000	2002	**163750080**	**163750089**	**163750082**	**163750081**	5RNE76410000
Ya R Forte (Che-Ita)	50	1994	1996	**163750110**	-	-	-	3WF176410000
Ye Evolis (Ita)	50	1992	1995	**163750110**	-	-	-	3WF176410000
Yh Flipper	50	1998	1998	**163750080**	**163750089**	**163750082**	**163750081**	5RNE76410000
Yh Flipper	50	2001	2002	**163750080**	**163750089**	**163750082**	**163750081**	5RNE76411000
Yh Flipper Euro2	50	2003	2004	**163750080**	**163750089**	**163750082**	**163750081**	5RNE76411000
Ym Fizz (Ita)	50	1994	1995	**163750110**	-	-	-	3WF176410000
Yn R Ovetto (Che-Ita)	50	1997	2001	**163750080**	**163750089**	**163750082**	**163750081**	5RNE76411000
Yn R Ovetto Euro1	50	2002	2004	**163750080**	**163750089**	**163750082**	**163750081**	5RNE76411000
Yn R Ovetto Euro2	50	2002	2003	**163750080**	**163750089**	**163750082**	**163750081**	5RNE76410000
Yq L Nitro Jaguar	50	2004	2004	**163750080**	**163750089**	**163750082**	**163750081**	5RNE76410000
Yq Nitro	50	2001	2002	**163750080**	**163750089**	**163750082**	**163750081**	5RNE76410000
Yq Nitro	50	2004	2004	**163750080**	**163750089**	**163750082**	**163750081**	5RNE76411000
Yq Nitro (Ita)	50	1997	2000	**163750080**	**163750089**	**163750082**	**163750081**	5RNE76410000
Yq Nitro Euro2	50	2003	2003	**163750080**	**163750089**	**163750082**	**163750081**	5RNE76410000
Yn Ovetto	100	2000	2002	**163750620**	-	-	-	5FA176410000
Yq Nitro	100	2000	2002	**163750620**	-	-	-	4VP176410000
Yw Booster	100	1999	2001	**163750620**	-	-	-	4VP176410000
Xc Flame F	125	2000	2000	**163750530**	-	-	-	4CW176410200
Xc K Flame R	125	1996	1999	**163750530**	-	-	-	4CW176410200
Xc T Flame	125	1995	1999	**163750530**	-	-	-	4CW176410200
Xn Doodo	125	2000	2001	-	-	**163750300**	-	5DS176410000
Xq Thunder	125	2001	2002	-	-	**163750300**	-	5DS176410000
Yp Skyliner	125	1998	2002	-	-	**163750300**	-	5DS176410000
Xn Doodo	150	2001	2002	-	-	**163750300**	-	5DS176410000
Xq Thunder	150	2001	2002	-	-	**163750300**	-	5DS176410000
Yp Skyliner	150	2000	2002	-	-	**163750300**	-	5DS176410000
Yp Skyliner	250	2000	2003	-	**163750659**	**163750650**	-	5CG176410000
Yp Skyliner Abs	250	2003	2003	-	**163750659**	**163750650**	-	5CG176410000
Xc Kilibre	300	2003	2003	-	-	**163750560**	-	5SEE76410000
PEUGEOT								
Zenith 25 Ma	25	1995	1997	**163750150**	-	-	-	723590
Zenith 25 Na	25	1998	2000	**163750150**	-	-	-	723590
Buxy 50	50	1995	1997	**163750160**	**163750169**	**163750162**	**163750161**	729171
Buxy 50 Rs	50	1996	1997	**163750160**	**163750169**	**163750162**	**163750161**	729171
Elyseo 50 45 Km/H	50	2002	2003	**163750160**	**163750169**	**163750162**	**163750161**	729171

Modello *Model*	**CC**	**Da** *From*	**A** *To*	**DAYCO** **Standard**	**DAYCO** **Confezione Industriale** *Industrial Packing*	**DAYCO** **Kevlar**	**Codice RMS** *RMS Code*	**OEM**
Elyseo 50 50 Km/H	50	1998	2001	**163750160**	**163750169**	**163750162**	**163750161**	729171
Elystar 50 Advantage	50	2006	2009	**163750160**	**163750169**	**163750162**	**163750161**	729171
Elystar 50 Sbc Tsdi	50	2003	2007	**163750160**	**163750169**	**163750162**	**163750161**	729171
Jet Force 50 C-Tech	50	2005	2009	**163750160**	**163750169**	**163750162**	**163750161**	729171
Jet Force 50 C-Tech Rally Victories	50	2006	2007	**163750160**	**163750169**	**163750162**	**163750161**	729171
Jet Force 50 C-Tech Rcup	50	2007	2009	**163750160**	**163750169**	**163750162**	**163750161**	729171
Jet Force 50 Darkside	50	2008	2015	**163750160**	**163750169**	**163750162**	**163750161**	729171
Jet Force 50 Ice Blade	50	2010	2012	**163750160**	**163750169**	**163750162**	**163750161**	729171
Jet Force 50 Tsdi	50	2003	2007	**163750160**	**163750169**	**163750162**	**163750161**	729171
Jet Force 50 Tsdi Sbc	50	2003	2006	**163750160**	**163750169**	**163750162**	**163750161**	729171
Ludix 50 2T Pro	50	2008	2011	**163750160**	**163750169**	**163750162**	**163750161**	729171
Ludix 50 Classic 1 Seater	50	2004	2007	**163750160**	**163750169**	**163750162**	**163750161**	729171
Ludix 50 Classic 2 Seater	50	2006	2007	**163750160**	**163750169**	**163750162**	**163750161**	729171
Ludix 50 Elegance	50	2004	2007	**163750160**	**163750169**	**163750162**	**163750161**	729171
Ludix 50 Ep	50	2008	2011	**163750160**	**163750169**	**163750162**	**163750161**	729171
Ludix 50 Ii Dt One 2 Sitzer Luxe	50	2008	2011	**163750160**	**163750169**	**163750162**	**163750161**	729171
Ludix 50 Ii Dt One Luxe 2 Sitzer	50	2008	2011	**163750160**	**163750169**	**163750162**	**163750161**	729171
Ludix 50 Ii Elegance	50	2008	2011	**163750160**	**163750169**	**163750162**	**163750161**	729171
Ludix 50 Ii Lc Blaster Ice Blade	50	2010	2011	**163750160**	**163750169**	**163750162**	**163750161**	729171
Ludix 50 Ii Lc Blaster Rcup	50	2008	2009	**163750160**	**163750169**	**163750162**	**163750161**	729171
Ludix 50 Ii Lc Blaster Rs12	50	2008	2011	**163750160**	**163750169**	**163750162**	**163750161**	729171
Ludix 50 Ii Snake Furious	50	2008	2011	**163750160**	**163750169**	**163750162**	**163750161**	729171
Ludix 50 Ii Snake Naked 10 Inch	50	2008	2011	**163750160**	**163750169**	**163750162**	**163750161**	729171
Ludix 50 Ii Trend 12 Inch	50	2008	2011	**163750160**	**163750169**	**163750162**	**163750161**	729171
Ludix 50 Ii Tt One 1 Sitzer	50	2008	2011	**163750160**	**163750169**	**163750162**	**163750161**	729171
Ludix 50 Ii Tt One 2 Sitzer	50	2008	2012	**163750160**	**163750169**	**163750162**	**163750161**	729171
Ludix 50 Lc Blaster 10 Zoll	50	2005	2007	**163750160**	**163750169**	**163750162**	**163750161**	729171
Ludix 50 Lc Rs Blaster 12 Zoll	50	2007	2007	**163750160**	**163750169**	**163750162**	**163750161**	729171
Ludix 50 One 1 Sitzer	50	2004	2007	**163750160**	**163750169**	**163750162**	**163750161**	729171
Ludix 50 One 2 Sitzer	50	2006	2007	**163750160**	**163750169**	**163750162**	**163750161**	729171
Ludix 50 Pro 2T	50	2008	2011	**163750160**	**163750169**	**163750162**	**163750161**	729171
Ludix 50 Snake	50	2004	2007	**163750160**	**163750169**	**163750162**	**163750161**	729171
Ludix 50 Trend 10 Inch	50	2004	2007	**163750160**	**163750169**	**163750162**	**163750161**	729171
Rapido 50 St	50	1985	1993	**163750130**	-	-	-	-
Speedake 50	50	1995	1997	**163750160**	**163750169**	**163750162**	**163750161**	729171
Speedfight 1 50 Ac Dt	50	1997	2000	**163750160**	**163750169**	**163750162**	**163750161**	729171
Speedfight 1 50 Lc Dd	50	1999	1999	**163750160**	**163750169**	**163750162**	**163750161**	729171
Speedfight 1 50 Lc Dd	50	1999	2000	**163750160**	**163750169**	**163750162**	**163750161**	729171
Speedfight 1 50 Lc Dt	50	1997	1998	**163750160**	**163750169**	**163750162**	**163750161**	729171
Speedfight 2 50 Ac Dd Ultimate Edition	50	2008	2009	**163750160**	**163750169**	**163750162**	**163750161**	729171
Speedfight 2 50 Ac Dt	50	2001	2009	**163750160**	**163750169**	**163750162**	**163750161**	729171
Speedfight 2 50 Ac Dt Iron-X	50	2007	2007	**163750160**	**163750169**	**163750162**	**163750161**	729171
Speedfight 2 50 Ac Dt Motor Sport	50	2007	2007	**163750160**	**163750169**	**163750162**	**163750161**	729171
Speedfight 2 50 Ac Dt Rally Victories	50	2006	2007	**163750160**	**163750169**	**163750162**	**163750161**	729171
Speedfight 2 50 Ac Dt Rcup	50	2007	2009	**163750160**	**163750169**	**163750162**	**163750161**	729171
Speedfight 2 50 Ac Dt Silver Sport	50	2004	2007	**163750160**	**163750169**	**163750162**	**163750161**	729171
Speedfight 2 50 Ac Dt Wrc 307	50	2005	2005	**163750160**	**163750169**	**163750162**	**163750161**	729171
Speedfight 2 50 Lc Dd	50	2001	2009	**163750160**	**163750169**	**163750162**	**163750161**	729171
Speedfight 2 50 Lc Dd Furious	50	2003	2003	**163750160**	**163750169**	**163750162**	**163750161**	729171
Speedfight 2 50 Lc Dd Iron-X	50	2007	2007	**163750160**	**163750169**	**163750162**	**163750161**	729171
Speedfight 2 50 Lc Dd Motor Sport	50	2007	2007	**163750160**	**163750169**	**163750162**	**163750161**	729171
Speedfight 2 50 Lc Dd Rally Victories	50	2006	2007	**163750160**	**163750169**	**163750162**	**163750161**	729171
Speedfight 2 50 Lc Dd Rcup	50	2007	2009	**163750160**	**163750169**	**163750162**	**163750161**	729171
Speedfight 2 50 Lc Dd Silver Sport	50	2004	2007	**163750160**	**163750169**	**163750162**	**163750161**	729171
Speedfight 2 50 Lc Dd Ultimate Edition	50	2008	2009	**163750160**	**163750169**	**163750162**	**163750161**	729171
Speedfight 2 50 Lc Dd Wrc 206	50	2003	2004	**163750160**	**163750169**	**163750162**	**163750161**	729171
Speedfight 2 50 Lc Dd Wrc 307	50	2005	2005	**163750160**	**163750169**	**163750162**	**163750161**	729171

Modello *Model*	CC	Da *From*	A *To*	DAYCO Standard	DAYCO Confezione Industriale *Industrial Packing*	DAYCO Kevlar	Codice RMS *RMS Code*	OEM
Speedfight 2 50 Lc Dd X-Race	50	2001	2003	**163750160**	**163750169**	**163750162**	**163750161**	729171
Speedfight 3 50 Ac Dt	50	2009	2011	**163750160**	**163750169**	**163750162**	**163750161**	729171
Speedfight 3 50 Ac Dt Rs	50	2010	2011	**163750160**	**163750169**	**163750162**	**163750161**	729171
Speedfight 3 50 Lc Dd	50	2009	2011	**163750160**	**163750169**	**163750162**	**163750161**	729171
Speedfight 3 50 Lc Dd Rs	50	2010	2011	**163750160**	**163750169**	**163750162**	**163750161**	729171
Speedfight 50 1 Ac Dt	50	1997	2000	**163750160**	**163750169**	**163750162**	**163750161**	729171
Speedfight 50 1 Lc Dd	50	1999	1999	**163750160**	**163750169**	**163750162**	**163750161**	729171
Speedfight 50 1 Lc Dd	50	1999	2000	**163750160**	**163750169**	**163750162**	**163750161**	729171
Speedfight 50 1 Lc Dt	50	1997	1998	**163750160**	**163750169**	**163750162**	**163750161**	729171
Speedfight 50 2 Ac Dd Ultimate Edition	50	2008	2009	**163750160**	**163750169**	**163750162**	**163750161**	729171
Speedfight 50 2 Ac Dt	50	2001	2009	**163750160**	**163750169**	**163750162**	**163750161**	729171
Speedfight 50 2 Ac Dt Iron-X	50	2007	2007	**163750160**	**163750169**	**163750162**	**163750161**	729171
Speedfight 50 2 Ac Dt Motor Sport	50	2007	2007	**163750160**	**163750169**	**163750162**	**163750161**	729171
Speedfight 50 2 Ac Dt Rally Victories	50	2006	2007	**163750160**	**163750169**	**163750162**	**163750161**	729171
Speedfight 50 2 Ac Dt R-Cup	50	2007	2009	**163750160**	**163750169**	**163750162**	**163750161**	729171
Speedfight 50 2 Ac Dt Silver Sport	50	2004	2007	**163750160**	**163750169**	**163750162**	**163750161**	729171
Speedfight 50 2 Ac Dt Wrc 307	50	2005	2005	**163750160**	**163750169**	**163750162**	**163750161**	729171
Speedfight 50 2 Lc Dd	50	2001	2009	**163750160**	**163750169**	**163750162**	**163750161**	729171
Speedfight 50 2 Lc Dd Furious	50	2003	2003	**163750160**	**163750169**	**163750162**	**163750161**	729171
Speedfight 50 2 Lc Dd Iron-X	50	2007	2007	**163750160**	**163750169**	**163750162**	**163750161**	729171
Speedfight 50 2 Lc Dd Motor Sport	50	2007	2007	**163750160**	**163750169**	**163750162**	**163750161**	729171
Speedfight 50 2 Lc Dd Rally Victories	50	2006	2007	**163750160**	**163750169**	**163750162**	**163750161**	729171
Speedfight 50 2 Lc Dd R-Cup	50	2007	2009	**163750160**	**163750169**	**163750162**	**163750161**	729171
Speedfight 50 2 Lc Dd Silver Sport	50	2004	2007	**163750160**	**163750169**	**163750162**	**163750161**	729171
Speedfight 50 2 Lc Dd Ultimate Edition	50	2008	2009	**163750160**	**163750169**	**163750162**	**163750161**	729171
Speedfight 50 2 Lc Dd Wrc 206	50	2003	2004	**163750160**	**163750169**	**163750162**	**163750161**	729171
Speedfight 50 2 Lc Dd Wrc 307	50	2005	2005	**163750160**	**163750169**	**163750162**	**163750161**	729171
Speedfight 50 2 Lc Dd X-Race	50	2001	2003	**163750160**	**163750169**	**163750162**	**163750161**	729171
Speedfight 50 3 Ac Dt	50	2009	2011	**163750160**	**163750169**	**163750162**	**163750161**	729171
Speedfight 50 3 Ac Dt Rs	50	2010	2012	**163750160**	**163750169**	**163750162**	**163750161**	729171
Speedfight 50 3 Lc Dd	50	2009	2011	**163750160**	**163750169**	**163750162**	**163750161**	729171
Speedfight 50 3 Lc Dd Rs	50	2010	2012	**163750160**	**163750169**	**163750162**	**163750161**	729171
Squab 50	50	1996	1997	**163750160**	**163750169**	**163750162**	**163750161**	729171
Sv 50 Lm Dt	50	1997	1998	**163750150**	-	-	-	723590
Sv 50 Tt	50	1993	1997	**163750150**	-	-	-	723590
Sv 50 Tt Junior	50	1993	1996	**163750150**	-	-	-	723590
Tkr 50	50	2001	2009	**163750160**	**163750169**	**163750162**	**163750161**	729171
Tkr 50 Furious	50	2003	2011	**163750160**	**163750169**	**163750162**	**163750161**	729171
Tkr 50 Metal-X	50	2002	2003	**163750160**	**163750169**	**163750162**	**163750161**	729171
Tkr 50 Rally Victories	50	2006	2007	**163750160**	**163750169**	**163750162**	**163750161**	729171
Tkr 50 Rcup	50	2008	2009	**163750160**	**163750169**	**163750162**	**163750161**	729171
Tkr 50 Streetboard	50	2001	2001	**163750160**	**163750169**	**163750162**	**163750161**	729171
Tkr 50 Streetzone	50	2003	2003	**163750160**	**163750169**	**163750162**	**163750161**	729171
Tkr 50 Wrc 307	50	2005	2005	**163750160**	**163750169**	**163750162**	**163750161**	729171
Trekker 50 Off Road	50	1998	2000	**163750160**	**163750169**	**163750162**	**163750161**	729171
Trekker 50 Road	50	1998	2000	**163750160**	**163750169**	**163750162**	**163750161**	729171
Trekker 50 Streetboard	50	1999	2000	**163750160**	**163750169**	**163750162**	**163750161**	729171
Vivacity 50	50	1999	2004	**163750160**	**163750169**	**163750162**	**163750161**	729171
Vivacity 50 2	50	2005	2009	**163750160**	**163750169**	**163750162**	**163750161**	729171
Vivacity 50 2 Blueline	50	2005	2005	**163750160**	**163750169**	**163750162**	**163750161**	729171
Vivacity 50 2 Compact	50	2005	2007	**163750160**	**163750169**	**163750162**	**163750161**	729171
Vivacity 50 2 Motorsport	50	2007	2009	**163750160**	**163750169**	**163750162**	**163750161**	729171
Vivacity 50 2 Rs	50	2008	2008	**163750160**	**163750169**	**163750162**	**163750161**	729171
Vivacity 50 2 Silver Sport	50	2005	2007	**163750160**	**163750169**	**163750162**	**163750161**	729171
Vivacity 50 2 Sportline 4	50	2006	2009	**163750160**	**163750169**	**163750162**	**163750161**	729171
Vivacity 50 3 2T New	50	2008	2017	**163750160**	**163750169**	**163750162**	**163750161**	729171
Vivacity 50 Blueline	50	2004	2004	**163750160**	**163750169**	**163750162**	**163750161**	729171

Modello *Model*	CC	Da *From*	A *To*	DAYCO Standard	DAYCO Confezione Industriale *Industrial Packing*	DAYCO Kevlar	Codice RMS *RMS Code*	OEM
Vivacity 50 Compact	50	2003	2004	**163750160**	**163750169**	**163750162**	**163750161**	729171
Vivacity 50 Silver Sport	50	2004	2004	**163750160**	**163750169**	**163750162**	**163750161**	729171
Vivacity 50 Sportline	50	2001	2001	**163750160**	**163750169**	**163750162**	**163750161**	729171
Vivacity 50 Sportline 2	50	2002	2002	**163750160**	**163750169**	**163750162**	**163750161**	729171
Vivacity 50 Sportline 3	50	2003	2003	**163750160**	**163750169**	**163750162**	**163750161**	729171
Zenith 50 Lm	50	1996	1997	**163750160**	**163750169**	**163750162**	**163750161**	729171
Zenith 50 Ln	50	1998	1998	**163750160**	**163750169**	**163750162**	**163750161**	729171
Zenith 50 M	50	1995	1997	**163750160**	**163750169**	**163750162**	**163750161**	729171
Zenith 50 N	50	1998	2000	**163750160**	**163750169**	**163750162**	**163750161**	729171
Elyseo 125 Dd	125	2001	2003	**163750420**	-	-	-	737830
Elyseo 125 Dt	125	1998	2000	**163750420**	-	-	-	737830
Elyseo 125 Dt Advantage	125	2004	2004	**163750420**	-	-	-	737830
Elystar 125 Advantage	125	2004	2007	**163750420**	-	-	-	737830
Elystar 125 Ie Abs	125	2003	2007	**163750420**	-	-	-	737830
Jet Force 125 Ie	125	2003	2007	**163750420**	-	-	-	737830
Jet Force 125 Ie Abs	125	2003	2007	**163750420**	-	-	-	737830
Looxor 125	125	2003	2006	-	**163750389**	**163750380**	-	756528
Elyseo 150	150	2001	2003	**163750420**	-	-	-	737830
Elystar 150 Ie	150	2004	2006	**163750420**	-	-	-	737830
Satelis 250 Ie Executive Abs	250	2007	2009	**163750810**	-	**163750812**	-	758692
Satelis 250 Ie Premium	250	2006	2011	**163750810**	-	**163750812**	-	758692
Satelis 250 Ie Rs Premium	250	2008	2011	**163750810**	-	**163750812**	-	758692
Geopolis 500 Premium	500	2008	2012	-	-	**163750680**	-	759676
Satelis 500 Executive Abs	500	2007	2009	-	-	**163750680**	-	759676
Satelis 500 Premium	500	2006	2012	-	-	**163750680**	-	759676
Satelis 500 Premium Rs	500	2008	2011	-	-	**163750680**	-	759676
Satelis 500 Urban Abs	500	2010	2011	-	-	**163750680**	-	759676
PGO								
Big Max 50	50	1995	2002	**163751120**	-	-	-	-
Big Max 50 Edition	50	2004	2005	**163751120**	-	-	-	-
G-Max 50	50	2005	2015	**163751120**	-	-	-	-
Pmx 50 Naked	50	2009	2013	**163751120**	-	-	-	-
Pmx 50 Sport	50	2002	2006	**163751120**	-	-	-	-
Tornado 50	50	1997	1999	**163751120**	-	-	-	-
T-Rex 50	50	1999	2016	**163751120**	-	-	-	-
PIAGGIO								
Ciao (Puleggia)	50	-	-	**163751210**	-	-	-	-
Diesis	50	2001	2001	**163750250**	**163750259**	**163750252**	-	436864
Fly 2T	50	2005	2007	**163750060**	**163750069**	-	**163750061**	82712R
Fly 2T	50	2010	2011	**163750060**	**163750069**	-	**163750061**	82712R
Fly 4T	50	2005	2007	**163750840**	-	-	-	842907
Fly 4T & 25-30 Km/H	50	2008	2011	**163750840**	-	-	-	842907
Fly 4T 2V	50	2013	2015	**163750840**	-	-	-	842907
Fly 4T 2V 25-30Km-H	50	2012	2014	**163750840**	-	-	-	842907
Fly 4T 4V	50	2012	2013	**163750840**	-	-	-	842907
Fly 4T Motore Chn	50	2006	2007	**163750840**	-	-	-	842907
Free	50	1992	1994	**163750010**	**163750019**	**163750012**	-	430728
Free Delivery	50	2000	2001	**163750250**	**163750259**	**163750252**	-	436864
Free FI	50	1995	2001	**163750010**	**163750019**	**163750012**	-	430728
Free FI	50	2002	2002	**163750250**	**163750259**	**163750252**	-	436864
Liberty	50	1997	2005	**163750060**	**163750069**	-	**163750061**	82712R
Liberty 2T	50	2006	2008	**163750060**	**163750069**	-	**163750061**	82712R
Liberty 2T Rst	50	2004	2004	**163750060**	**163750069**	-	**163750061**	82712R
Liberty 2T Sport	50	2006	2008	**163750060**	**163750069**	-	**163750061**	82712R
Liberty 4T	50	2000	2002	**163750060**	**163750069**	-	**163750061**	82712R
Liberty 4T	50	2005	2008	**163750060**	**163750069**	-	**163750061**	82712R
Liberty 4T Delivery - Single	50	2010	2014	**163750060**	**163750069**	-	**163750061**	82712R

Modello *Model*	CC	Da *From*	A *To*	DAYCO Standard	DAYCO Confezione Industriale *Industrial Packing*	DAYCO Kevlar	Codice RMS *RMS Code*	OEM
Liberty 4T Delivery Tnt	50	2009	2009	**163750060**	**163750069**	-	**163750061**	82712R
Liberty 4T Iget Corporate E4	50	2018	2018	**163750060**	**163750069**	-	**163750061**	480852
Liberty 4T Ptt - Double - Nexive	50	2009	2015	**163750060**	**163750069**	-	**163750061**	82712R
Liberty 4T Ptt (Deu)	50	2007	2012	**163750060**	**163750069**	-	**163750061**	82712R
Liberty 4T Rst	50	2004	2004	**163750060**	**163750069**	-	**163750061**	82712R
Liberty 4T Sport	50	2006	2008	**163750060**	**163750069**	-	**163750061**	82712R
Liberty Iget 4T 3V 25Km/H	50	2016	2016	**163750060**	**163750069**	-	**163750061**	82712R
Liberty Iget 4T 3V 25Km/H	50	2016	2016	**163750060**	**163750069**	-	**163750061**	82712R
Liberty Iget 4T 3V Ie	50	2015	2016	**163750060**	**163750069**	-	**163750061**	82712R
Liberty Iget 4T 3V Ie	50	2015	2017	**163750060**	**163750069**	-	**163750061**	480852
Liberty Iget 4T 3V Ie E4 Emea	50	2017	2018	**163750060**	**163750069**	-	**163750061**	480852
Liberty Iget 4T 3V Ie E4 Emea 25Km/H	50	2017	2018	**163750060**	**163750069**	-	**163750061**	480852
Liberty Moc 2T & Elle	50	2009	2013	**163750060**	**163750069**	-	**163750061**	82712R
Liberty Moc 4T & Elle	50	2009	2016	**163750060**	**163750069**	-	**163750061**	82712R
Liberty Ptt Eu2	50	2004	2005	**163750060**	**163750069**	-	**163750061**	82712R
Nrg	50	1994	1996	**163750010**	**163750019**	**163750012**	-	430728
Nrg Extreme	50	1999	2000	**163750250**	**163750259**	**163750252**	-	436864
Nrg Extreme	50	1999	2000	**163750250**	**163750259**	**163750252**	-	436864
Nrg Mc3	50	2001	2004	**163750250**	**163750259**	**163750252**	-	436864
Nrg Power Dd	50	2005	2015	**163750250**	**163750259**	**163750252**	-	436864
Nrg Power Dd	50	2007	2017	**163750250**	**163750259**	**163750252**	-	436864
Nrg Power Dd Serie Speciale	50	2007	2012	**163750250**	**163750259**	**163750252**	-	436864
Nrg Power Dt	50	2006	2015	**163750250**	**163750259**	**163750252**	-	436864
Nrg Power Dt Serie Speciale	50	2007	2008	**163750250**	**163750259**	**163750252**	-	436864
Nrg Power H2O E4 No Abs	50	2018	2018	**163750250**	**163750259**	**163750252**	-	436864
Nrg Power Purejet	50	2004	2011	**163750250**	**163750259**	**163750252**	-	833982
Nrg Purejet	50	2002	2004	**163750250**	**163750259**	**163750252**	-	436864
Nrg Purejet	50	2010	2010	**163750250**	**163750259**	**163750252**	-	833982
Nrg Rst Mc2	50	1996	1997	**163750010**	**163750019**	**163750012**	-	430728
Nrg Rst Mc2	50	1998	1998	**163750250**	**163750259**	**163750252**	-	436864
Ntt	50	1995	1996	**163750010**	**163750019**	**163750012**	-	430728
Quartz	50	1992	1996	**163750040**	**163750049**	**163750042**	**163750041**	431190
Sfera	50	1991	1993	**163750030**	-	-	**163750031**	286175
Sfera Maquillage 2	50	1994	1994	**163750040**	**163750049**	**163750042**	**163750041**	431190
Sfera Rst	50	1995	1997	**163750040**	**163750049**	**163750042**	**163750041**	431190
Typhoon	50	2001	2011	**163750250**	**163750259**	**163750252**	-	436864
Typhoon 2T Euro2	50	2010	2016	**163750060**	**163750069**	-	**163750061**	82712R
Typhoon 2T Euro3 Ch	50	2011	2011	**163750060**	**163750069**	-	**163750061**	82712R
Vespa Et2	50	1997	1998	**163750040**	**163750049**	**163750042**	**163750041**	431190
Vespa Et2 Iniezione	50	1997	2000	**163750050**	-	**163750052**	**163750051**	82645R
Vespa Et4	50	2000	2005	**163750050**	-	**163750052**	**163750051**	82645R
Vespa Lx 2T	50	2005	2013	**163750050**	-	**163750052**	**163750051**	82645R
Vespa Lx 2T Touring & 30Km	50	2010	2013	**163750050**	-	**163750052**	**163750051**	82645R
Vespa Lx 4T	50	2005	2009	**163750050**	-	**163750052**	**163750051**	82645R
Vespa Lx 4T-4V	50	2009	2013	**163750050**	-	**163750052**	**163750051**	82645R
Vespa Lx 4T-4V Touring	50	2010	2013	**163750050**	-	**163750052**	**163750051**	82645R
Vespa Lxv 2T	50	2006	2009	**163750050**	-	**163750052**	**163750051**	82645R
Vespa Lxv 2T Navy	50	2008	2008	**163750050**	-	**163750052**	**163750051**	82645R
Vespa Primavera 2T	50	2013	2016	**163750250**	**163750259**	**163750252**	-	436864
Vespa Primavera 2T	50	2013	2017	**163750250**	**163750259**	**163750252**	-	436864
Vespa Primavera 4T-4V	50	2013	2016	**163750840**	-	-	-	842907
Vespa S 2T & College	50	2007	2012	**163750050**	-	**163750052**	**163750051**	82645R
Vespa S 4T-4V & College	50	2008	2012	**163750050**	-	**163750052**	**163750051**	82645R
Vespa Sprint 2T 2V	50	2014	2016	**163750250**	**163750259**	**163750252**	-	436864
Vespa Sprint 2T Noabs E2	50	2014	2017	**163750250**	**163750259**	**163750252**	-	436864
Vespa Sprint 4T 4V	50	2014	2016	**163750840**	-	-	-	842907
Zip	50	1992	1993	**163750030**	-	-	**163750031**	286175

Modello *Model*	**CC**	**Da** *From*	**A** *To*	**DAYCO Standard**	**DAYCO Confezione Industriale** *Industrial Packing*	**DAYCO Kevlar**	**Codice RMS** *RMS Code*	**OEM**
Zip	50	1995	1996	**163750040**	**163750049**	**163750042**	**163750041**	431190
Zip	50	2000	2004	**163750050**	-	**163750052**	**163750051**	82645R
Zip 2T	50	2008	2013	**163750050**	-	**163750052**	**163750051**	82645R
Zip 4T	50	2000	2013	**163750050**	-	**163750052**	**163750051**	82645R
Zip 4T 25Km-H	50	2006	2016	**163750050**	-	**163750052**	**163750051**	82645R
Zip Bimodale	50	1994	1997	**163750040**	**163750049**	**163750042**	**163750041**	431190
Zip Fast Raider	50	1993	1994	**163750040**	**163750049**	**163750042**	**163750041**	431190
Zip Fast Raider Rst	50	1996	1997	**163750040**	**163750049**	**163750042**	**163750041**	431190
Zip Rst	50	1996	1999	**163750040**	**163750049**	**163750042**	**163750041**	431190
Zip Sp	50	1996	2000	**163750040**	**163750049**	**163750042**	**163750041**	431190
Zip Sp	50	2001	2004	**163750050**	-	**163750052**	**163750051**	82645R
Zip Sp Euro2	50	2006	2013	**163750050**	-	**163750052**	**163750051**	82645R
Zip 4T	100	2006	2010	**163750050**	-	**163750052**	**163750051**	82645R
Beverly	125	2001	2003	-	-	**163750600**	-	842009
Beverly Euro 3	125	2007	2008	-	-	**163750600**	-	842009
Beverly Euro 3 Mic	125	2007	2007	-	-	**163750600**	-	842009
Beverly Euro 3 Sport	125	2007	2008	-	-	**163750600**	-	842009
Beverly Rst	125	2004	2005	-	-	**163750600**	-	842009
Beverly Rst	125	2005	2007	-	-	**163750600**	-	842009
Beverly Rst 4T 4V Ie Euro3	125	2010	2015	-	-	**163750600**	-	842009
Beverly Tourer Euro3	125	2007	2010	-	-	**163750600**	-	842009
Carnaby	125	2007	2010	-	-	**163750600**	-	842009
Fly	125	2005	2007	-	**163750389**	**163750380**	-	841213
Fly 4T 3V Ie E3 Dt	125	2013	2015	-	**163750389**	**163750380**	-	841213
Fly 4T 3V Ie Euro3 Lem	125	2012	2013	-	**163750389**	**163750380**	-	841213
Fly Euro3	125	2007	2011	-	**163750389**	**163750380**	-	841213
Hexagon Gtx	125	2000	2000	-	**163750389**	**163750380**	-	841213
Hexagon Lx4	125	1998	1999	**163750260**	-	-	-	825059
Hexagon Lx-Lxt	125	1998	1999	-	-	**163750200**	-	484497
Liberty	125	1998	2000	**163750260**	-	-	-	825059
Liberty	125	2001	2002	-	**163750389**	**163750380**	-	841213
Liberty 4T	125	2006	2007	-	**163750389**	**163750380**	-	841213
Liberty 4T 2V Euro3	125	2009	2012	-	**163750389**	**163750380**	-	841213
Liberty 4T 2V Ie Ptt - Ita	125	2012	2013	-	**163750389**	**163750380**	-	82973R
Liberty 4T Euro3	125	2006	2008	-	**163750389**	**163750380**	-	841213
Liberty 4T Euro3 Delivery - Single	125	2007	2015	-	**163750389**	**163750380**	-	841213
Liberty 4T Euro3 Delivery - Tnt - Nexive	125	2008	2015	-	**163750389**	**163750380**	-	841213
Liberty 4T Sport Euro3	125	2006	2008	-	**163750389**	**163750380**	-	841213
Liberty Rst	125	2004	2005	-	**163750389**	**163750380**	-	841213
Liberty Rst Ptt	125	2005	2011	-	**163750389**	**163750380**	-	841213
Liberty Sport	125	2006	2006	-	**163750389**	**163750380**	-	841213
Mp3	125	2006	2008	-	**163750389**	**163750380**	-	841213
Mp3 Ibrido	125	2009	2010	-	**163750389**	**163750380**	-	841213
Mp3 Ie	125	2008	2009	-	**163750389**	**163750380**	-	841213
Mp3 Ie Touring	125	2011	2012	-	**163750389**	**163750380**	-	841213
Mp3 Yourban Erl	125	2011	2013	-	**163750389**	**163750380**	-	841213
Sfera	125	1995	1997	**163750070**	-	-	-	478547
Skipper	125	1994	1997	**163750190**	-	-	-	434812
Skipper 4T	125	2000	2002	-	**163750389**	**163750380**	-	841213
Skipper Lx	125	1998	1999	**163750190**	-	-	-	434812
Super Hexagon Gtx 12	125	2001	2002	-	**163750389**	**163750380**	-	841213
Typhoon 4T 2V Euro3	125	2010	2011	-	**163750389**	**163750380**	-	841213
Vespa 946 4T 3V Abs	125	2013	2015	-	**163750389**	**163750380**	-	841213
Vespa 946 4T 3V Abs - 946 Red Emea, Apac	125	2013	2017	-	**163750389**	**163750380**	-	841213
Vespa 946 4T 3V Abs Armani	125	2015	2015	-	**163750389**	**163750380**	-	841213
Vespa Et4	125	1996	1998	**163750070**	-	-	-	478547
Vespa Et4	125	1999	2002	-	**163750389**	**163750380**	-	841213

Modello *Model*	CC	Da *From*	A *To*	DAYCO Standard	DAYCO Confezione Industriale *Industrial Packing*	DAYCO Kevlar	Codice RMS *RMS Code*	OEM
Vespa Granturismo	125	2003	2007	-	**163750389**	**163750380**	-	841213
Vespa Granturismo Euro 3	125	2006	2007	-	**163750389**	**163750380**	-	841213
Vespa Gts 4T Ie Super	125	2009	2016	-	**163750389**	**163750380**	-	841213
Vespa Gts Euro3	125	2007	2012	-	**163750389**	**163750380**	-	841213
Vespa Gtv	125	2006	2008	-	**163750389**	**163750380**	-	841213
Vespa Gtv 4T Navy Euro3	125	2008	2008	-	**163750389**	**163750380**	-	841213
Vespa Lx	125	2005	2006	-	**163750389**	**163750380**	-	841213
Vespa Lx 4T 3V Ie - Touring	125	2012	2013	-	**163750389**	**163750380**	-	841213
Vespa Lx 4T Euro3 Touring	125	2010	2011	-	**163750389**	**163750380**	-	841213
Vespa Lx 4T FI	125	2009	2009	-	**163750389**	**163750380**	-	841213
Vespa Lx Euro 3	125	2006	2008	-	**163750389**	**163750380**	-	841213
Vespa Lx Euro 3 Ie	125	2009	2011	-	**163750389**	**163750380**	-	841213
Vespa Lxv 4T Euro3	125	2006	2009	-	**163750389**	**163750380**	-	841213
Vespa Lxv 4T Navy Euro3	125	2007	2008	-	**163750389**	**163750380**	-	841213
Vespa Lxv Ie 4T	125	2010	2013	-	**163750389**	**163750380**	-	841213
Vespa S 4T 3V Ie	125	2012	2012	-	**163750389**	**163750380**	-	841213
Vespa S 4T Euro 3	125	2007	2008	-	**163750389**	**163750380**	-	841213
Vespa S 4T Ie & College	125	2009	2011	-	**163750389**	**163750380**	-	841213
X Evo	125	2007	2016	-	**163750389**	**163750380**	-	841213
X Evo	125	2007	2016	-	**163750389**	**163750380**	-	841213
X10 4T 4V Ie Euro3	125	2012	2015	-	-	**163750600**	-	842009
X7 Euro 3	125	2008	2008	-	**163750389**	**163750380**	-	841213
X7 Evo Ie Euro 3	125	2009	2010	-	**163750389**	**163750380**	-	841213
X8	125	2004	2006	-	**163750389**	**163750380**	-	841213
X8 Premium Euro 2	125	2006	2006	-	**163750389**	**163750380**	-	841213
X8 Premium Euro 3	125	2006	2007	-	**163750389**	**163750380**	-	841213
X8 Street Euro 2	125	2006	2007	-	**163750389**	**163750380**	-	841213
X9	125	2001	2002	-	**163750389**	**163750380**	-	841213
X9 Evolution	125	2003	2003	-	**163750389**	**163750380**	-	841213
X9 Evolution	125	2005	2006	-	**163750389**	**163750380**	-	841213
X9 Evolution Euro3	125	2007	2007	-	**163750389**	**163750380**	-	841213
Zip	125	2000	2002	-	**163750389**	**163750380**	-	841213
Fly	150	2005	2007	-	**163750389**	**163750380**	-	841213
Fly Euro3	150	2008	2011	-	**163750389**	**163750380**	-	841213
Hexagon	150	1994	1997	**163750190**	-	-	-	434812
Liberty 4T 3V Lem	150	2013	2014	-	**163750389**	**163750380**	-	841213
Liberty 4T Euro3	150	2008	2008	-	**163750389**	**163750380**	-	841213
Liberty 4T Sport Euro3	150	2008	2008	-	**163750389**	**163750380**	-	841213
Liberty Iget 4T 3V Ie	150	2015	2016	-	**163750389**	**163750380**	-	841213
Liberty Moc 4T Euro3	150	2009	2013	-	**163750389**	**163750380**	-	841213
Vespa Gts Super Ie 4T 3V Au,Ex,Jp,Ri,T,V	150	2014	2015	-	**163750389**	**163750380**	-	841213
Vespa Lt 4T 3V Ie	150	2014	2014	-	**163750389**	**163750380**	-	841213
Vespa Lx	150	2005	2006	-	**163750389**	**163750380**	-	841213
Vespa Lx 4T FI	150	2009	2009	-	**163750389**	**163750380**	-	841213
Vespa Lx Euro 3	150	2006	2008	-	**163750389**	**163750380**	-	841213
Vespa Lx Euro 3 Ie	150	2009	2011	-	**163750389**	**163750380**	-	841213
Vespa S 4T	150	2008	2009	-	**163750389**	**163750380**	-	841213
Vespa S 4T Ie & College	150	2009	2012	-	**163750389**	**163750380**	-	841213
X8 Street Euro 2	150	2006	2008	-	**163750389**	**163750380**	-	841213
Hexagon Gtx	180	2000	2000	-	**163750669**	**163750660**	-	840908
Super Hexagon Gtx 12	180	2001	2002	-	**163750669**	**163750660**	-	840908
X9 Amalfi	180	2000	2003	-	**163750669**	**163750660**	-	833578
Beverly	200	2001	2003	-	-	**163750690**	-	842011
Carnaby	200	2007	2008	-	-	**163750690**	-	842011
Liberty	200	2006	2006	-	**163750669**	**163750660**	-	840908
Liberty 4T Euro3	200	2006	2008	-	**163750669**	**163750660**	-	840908
Liberty 4T Sport Euro3	200	2006	2007	-	**163750669**	**163750660**	-	840908

Modello *Model*	**CC**	**Da** *From*	**A** *To*	**DAYCO** **Standard**	**DAYCO** **Confezione Industriale** *Industrial Packing*	**DAYCO** **Kevlar**	**Codice RMS** *RMS Code*	**OEM**
Liberty Rst	200	2004	2004	-	**163750669**	**163750660**	-	840908
Liberty Sport	200	2006	2006	-	**163750669**	**163750660**	-	840908
Vespa Granturismo	200	2003	2007	-	**163750669**	**163750660**	-	840908
X8	200	2004	2007	-	**163750669**	**163750660**	-	840908
X9	200	2002	2003	-	**163750669**	**163750660**	-	833578
X9 Evolution	200	2003	2003	-	**163750669**	**163750660**	-	833578
Carnaby	250	2008	2009	-	-	**163750790**	-	841851
Mp3	250	2006	2008	**163750810**	-	**163750812**	-	82941R
Mp3 Lt	250	2008	2009	**163750810**	-	**163750812**	-	82941R
Mp3 Mic	250	2008	2009	**163750810**	-	**163750812**	-	82941R
Vespa Gt 60 Euro 3	250	2006	2007	**163750810**	-	**163750812**	-	82941R
Vespa Gts	250	2005	2014	**163750810**	-	**163750812**	-	82941R
Vespa Gts Abs	250	2005	2012	**163750810**	-	**163750812**	-	843963
Vespa Gtv	250	2006	2009	**163750810**	-	**163750812**	-	82941R
Vespa Gtv 4T Navy Euro3	250	2007	2007	**163750810**	-	**163750812**	-	82941R
X Evo	250	2007	2013	**163750810**	-	**163750812**	-	843963
X7 Euro 3	250	2008	2008	**163750810**	-	**163750812**	-	82941R
X8 Euro3	250	2005	2008	**163750810**	-	**163750812**	-	843963
X9 Evolution	250	2004	2004	**163750810**	-	**163750812**	-	843963
X9 Evolution	250	2006	2006	**163750810**	-	**163750812**	-	843963
Beverly Ie Abs E4	300	2016	2016	-	-	**163750790**	-	B013360
Mp3 300 Ie Lt	300	2010	2011	**163750810**	-	**163750812**	-	82941R
Mp3 300 Ie Mic	300	2010	2011	**163750810**	-	**163750812**	-	82941R
Mp3 300 Lt Business - Sport Abs - Enjoy	300	2014	2016	**163750810**	-	**163750812**	-	82941R
Mp3 4T 4V Ie Erl Ibrido	300	2010	2013	**163750810**	-	**163750812**	-	82941R
Mp3 4T 4V Ie Lt Ibrido	300	2010	2011	**163750810**	-	**163750812**	-	82941R
Mp3 Ie E4 Lt Business - Sport Abs	300	2016	2018	**163750810**	-	**163750812**	-	82941R
Mp3 Ie Lt- Ie Lt Sport	300	2011	2014	**163750810**	-	**163750812**	-	82941R
Mp3 Ie Lt Touring	300	2011	2013	**163750810**	-	**163750812**	-	82941R
Mp3 Ie Touring	300	2011	2012	**163750810**	-	**163750812**	-	82941R
Mp3 Yourban Erl	300	2011	2015	**163750810**	-	**163750812**	-	82941R
Mp3 Yourban Lt Erl	300	2011	2016	**163750810**	-	**163750812**	-	82941R
Mp3 Yourban Lt Rl E4	300	2017	2018	**163750810**	-	**163750812**	-	82941R
Vespa Gts - Gts Super Ie Abs E4 (Emea)	300	2016	2018	**163750810**	-	**163750812**	-	82941R
Vespa Gts Ie & Touring	300	2012	2016	**163750810**	-	**163750812**	-	82941R
Vespa Gts Ie Abs E4 (Emea)	300	2016	2017	**163750810**	-	**163750812**	-	82941R
Vespa Gts Ie Touring	300	2011	2012	**163750810**	-	**163750812**	-	82941R
Vespa Gts Super	300	2008	2016	**163750810**	-	**163750812**	-	82941R
Vespa Gts Super Sport	300	2010	2013	**163750810**	-	**163750812**	-	82941R
Vespa Gtv 4T 4V Ie	300	2010	2013	**163750810**	-	**163750812**	-	82941R
Vespa Gtv Sei Giorni Ie E4 Abs (Emea)	300	2017	2017	**163750810**	-	**163750812**	-	82941R
Vespa Gtv Via Montenapoleone	300	2010	2010	**163750810**	-	**163750812**	-	82941R
X7 Evo Ie Euro 3	300	2009	2010	**163750810**	-	**163750812**	-	82941R
Beverly Euro 3	400	2006	2007	-	-	**163750680**	-	832738
Beverly Tourer Euro3	400	2008	2010	-	-	**163750680**	-	832738
Mp3	400	2007	2008	-	-	**163750680**	-	832738
Mp3 Ie Lt - Mp3 Ie Lt Sport	400	2008	2010	-	-	**163750680**	-	832738
Mp3 Ie Lt Touring	400	2011	2011	-	-	**163750680**	-	832738
Mp3 Mic	400	2008	2010	-	-	**163750680**	-	832738
Mp3 Rl Touring	400	2011	2011	-	-	**163750680**	-	832738
X Evo	400	2007	2011	-	-	**163750680**	-	832738
X8 Euro3	400	2006	2008	-	-	**163750680**	-	832738
Beverly	500	2002	2006	-	-	**163750680**	-	832738
Beverly Euro 3	500	2006	2008	-	-	**163750680**	-	832738
X9 Evolution	500	2003	2007	-	-	**163750680**	-	832738
X9 Evolution Abs	500	2006	2007	-	-	**163750680**	-	832738

Modello *Model*	CC	Da *From*	A *To*	DAYCO Standard	DAYCO Confezione Industriale *Industrial Packing*	DAYCO Kevlar	Codice RMS *RMS Code*	OEM
SACHS								
Limbo 25 Ma	25	1996	1997	**163750150**	-	-	-	-
Limbo 25 Sa	25	1998	2000	**163750150**	-	-	-	-
Sr 50 Samba	50	1996	1997	**163750150**	-	-	-	-
SCOOTER CINESI								
Scooter Carter Corto	50	2000	2000	-	-	-	**163751211**	-
Scooter Carter Lungo	50	2000	2000	-	-	-	**163751231**	-
Scooter	125	2000	2000	-	-	-	**163751221**	-
Scooter	125	2000	2000	-	-	-	**163751231**	-
Scooter	150	2000	2000	-	-	-	**163751221**	-
Scooter	150	2000	2000	-	-	-	**163751231**	-
SUZUKI								
Ah50 Address	50	1992	1995	**163750220**	-	-	-	27601-09E00-000
Ay Ayw K1-K4	50	2001	2002	**163750320**	-	-	**163750321**	27601-06F01-000
Ay Ayw Katana V-Y	50	1997	2000	**163750320**	-	-	**163750321**	27601-06F01-000
Ay50Ayw K1-K4	50	2001	2004	**163750320**	-	-	**163750321**	27601-06F01-000
Ay50Ayw Katana K1-K4	50	2001	2004	**163750320**	-	-	**163750321**	27601-06F01-000
Ay50Ayw Katana V-Y	50	1997	2000	**163750320**	-	-	**163750321**	27601-06F01-000
Tr S Street Magic	50	1998	1998	**163750320**	-	-	**163750321**	27601-06F01-000
Uf Estilete	50	2000	2000	**163750320**	-	-	**163750321**	27601-06F01-D00
Ux Zillion	50	1999	1999	**163750320**	-	-	**163750321**	27601-06F01-000
An250 Burgman K3-K6	250	2003	2006	-	-	**163750700**	-	27601-14F11-000
An250 Burgman W-K2	250	1998	2002	-	-	**163750700**	-	27601-14F11-000
An400 Burgman K7-L0	400	2007	2010	-	-	**163750830**	-	27601-05H00-000
An400 Burgman L1	400	2011	2011	-	-	**163750830**	-	27601-05H00-000
An400 Burgman L2	400	2012	2012	-	-	**163750830**	-	27601-05H00-000
An400 Burgman L3	400	2013	2013	-	-	**163750830**	-	27601-05H00-000
An400 Burgman L4	400	2014	2014	-	-	**163750830**	-	27601-05H00-000
An400 Burgman L5	400	2015	2015	-	-	**163750830**	-	27601-05H00-000
An400 Burgman L6	400	2016	2016	-	-	**163750830**	-	27601-05H00-000
An400 Burgman L8	400	2018	2018	-	-	**163750830**	-	27601-05H10-000
An400 Burgman X-K2	400	1999	2002	-	-	**163750710**	**163750713**	27601-15F03-000
SYM								
Dd	50	2002	2002	**163750210**	-	-	-	1B01GW001
Dd Eu2	50	2003	2007	**163750210**	-	-	-	1B01M7Q01
Jet	50	1999	2001	**163751060**	-	-	-	1B01T5201
Jet Euro X Eu2	50	2003	2007	**163751060**	-	-	-	1B01T5201
Jet Sport X	50	2007	2011	**163751060**	-	-	-	1B01T5201
Jet4 R 2T	50	2011	2014	**163751060**	-	-	-	1B01T5201
Jungle	50	2000	2000	**163751060**	-	-	-	1B01T5201
Mask	50	2000	2001	**163751060**	-	-	-	1B01T5201
Mask Eu2	50	2003	2004	**163751060**	-	-	-	1B01T5201
Red Devil	50	1999	1999	**163751060**	-	-	-	1B01T5201
Cinderella	100	1999	2001	**163751190**	-	-	-	1B01A3101
Gts 125	125	2006	2007	-	-	**163751080**	-	1B01HNA01
Gts Joymax	125	2006	2007	-	-	**163751080**	-	1B01HNA01
Hd Eu2	125	2003	2004	-	-	**163751090**	-	1B01HHB01
Hd Euro3	125	2007	2008	-	-	**163751090**	-	1B01HHB01
Hd Evo	125	2005	2006	-	-	**163751090**	-	1B01HHB01
Hd Evo Euro3	125	2007	2008	-	-	**163751090**	-	1B01HHB01
Hd Evo Euro3	125	2010	2011	-	-	**163751090**	-	1B01HHB01
Hd Evo Tamburo Euro3	125	2008	2009	-	-	**163751090**	-	1B01HHB01
Hd2	125	2011	2011	-	-	**163751090**	-	1B01HHB01
Hd2	125	2014	2014	-	-	**163751090**	-	1B01HHB01
Joyride	125	2001	2002	-	-	**163751070**	-	1B01H9A01
Joyride Eu2	125	2003	2004	-	-	**163751070**	-	1B01H9A01
Joyride Euro2	125	2005	2006	-	-	**163751080**	-	1B01HNA01

Modello *Model*	CC	Da *From*	A *To*	DAYCO Standard	DAYCO Confezione Industriale *Industrial Packing*	DAYCO Kevlar	Codice RMS *RMS Code*	OEM
Joyride Euro3	125	2007	2007	-	-	**163751080**	-	1B01HNA01
Joyride Evo	125	2009	2010	-	-	**163751080**	-	1B01HNA01
Joyride Evo	125	2010	2010	-	-	**163751080**	-	1B01HNA01
Joyride Evo	125	2013	2014	-	-	**163751080**	-	1B01HNA01
Attila	150	2000	2001	-	-	**163751030**	-	1B01H7A01
Joyride	150	2001	2002	-	-	**163751070**	-	1B01H9A01
Track Runner	180	2006	2007	-	-	**163751200**	-	1B01RA101
Hd Eu2	200	2003	2004	-	-	**163751100**	-	1B01HHA01
Hd Euro3 I	200	2007	2007	-	-	**163751100**	-	1B01HHA01
Hd Evo Euro2	200	2005	2006	-	-	**163751100**	-	1B01HHA01
Hd Evo Euro3 I	200	2007	2007	-	-	**163751100**	-	1B01HHA01
Hd Evo I Euro3	200	2010	2012	-	-	**163751100**	-	1B01HHA01
Hd Evo I Tamburo Euro3	200	2008	2009	-	-	**163751100**	-	1B01HHA01
Hd2 I	200	2011	2011	-	-	**163751100**	-	1B01HHA01
Hd2 I	200	2014	2014	-	-	**163751100**	-	1B01HHA01
Joyride	200	2003	2003	-	-	**163751070**	-	1B01H9A01
Joyride Eu2	200	2003	2004	-	-	**163751070**	-	1B01H9A01
Joyride Euro2	200	2005	2006	-	-	**163751070**	-	1B01H9A01
Gts	250	2007	2008	-	-	**163751110**	-	1B01HMA01
Gts 250	250	2006	2007	-	-	**163751110**	-	1B01HMA01
Joymax	250	2005	2007	-	-	**163751110**	-	1B01HMA01
Joymax Euro3 I	250	2007	2008	-	-	**163751110**	-	1B01HMA01
YAMAHA								
Bw'S	50	2004	2016	**163750080**	**163750089**	**163750082**	**163750081**	5RNE76411000
Bw'S Bump	50	1997	1998	**163750080**	**163750089**	**163750082**	**163750081**	5RNE76411000
Bw'S Easy	50	2013	2013	**163750080**	**163750089**	**163750082**	**163750081**	5RNE76411000
Bw'S Naked	50	2003	2003	**163750080**	**163750089**	**163750082**	**163750081**	5RNE76410000
Bw'S Naked	50	2004	2004	**163750080**	**163750089**	**163750082**	**163750081**	5RNE76411000
Bw'S Naked	50	2009	2016	**163750080**	**163750089**	**163750082**	**163750081**	5RNE76411000
Bw'S Next Generation	50	1997	1998	**163750080**	**163750089**	**163750082**	**163750081**	5RNE76411000
Bw'S Next Generation	50	1999	1999	**163750080**	**163750089**	**163750082**	**163750081**	5RNE76410000
Bw'S Next Generation	50	1999	2002	**163750080**	**163750089**	**163750082**	**163750081**	5RNE76411000
Bw'S Next Generation	50	2003	2003	**163750080**	**163750089**	**163750082**	**163750081**	5RNE76410000
Bw'S Next Generation	50	2004	2006	**163750080**	**163750089**	**163750082**	**163750081**	5RNE76411000
Bw'S Original	50	1997	1998	**163750080**	**163750089**	**163750082**	**163750081**	5RNE76411000
Bw'S Original	50	2001	2002	**163750080**	**163750089**	**163750082**	**163750081**	5RNE76411000
Bw'S Original Euro2	50	2003	2003	**163750080**	**163750089**	**163750082**	**163750081**	5RNE76410000
Cr Z	50	1991	1995	**163750110**	-	-	-	3WF176410000
Cs Jog R	50	2002	2002	**163750080**	**163750089**	**163750082**	**163750081**	5RNE76410000
Cs Jog R	50	2006	2015	**163750080**	**163750089**	**163750082**	**163750081**	5RNE76411000
Cs Jog R Euro2	50	2002	2005	**163750080**	**163750089**	**163750082**	**163750081**	5RNE76411000
Ct S	50	1990	1995	**163750090**	-	-	-	23Y176410000
Ct Ss	50	1992	1995	**163750090**	-	-	-	23Y176410000
Cw Bw'S Original Euro2	50	2002	2002	**163750080**	**163750089**	**163750082**	**163750081**	5RNE76410000
Cw L Bw'S	50	2003	2004	**163750080**	**163750089**	**163750082**	**163750081**	5RNE76410000
Cw Rs Spy	50	1995	1998	**163750080**	**163750089**	**163750082**	**163750081**	5RNE76411000
Cw Sp Bw'S Original Euro2	50	2002	2002	**163750080**	**163750089**	**163750082**	**163750081**	5RNE76410000
Ew Slider	50	2000	2002	**163750080**	**163750089**	**163750082**	**163750081**	5RNE76411000
Ns50 Aerox 2T	50	2013	2016	**163750080**	**163750089**	**163750082**	**163750081**	5RNE76411000
Ns50F Aerox F	50	2014	2018	-	-	-	**163750111**	5C3E76410000
Ns50N Aerox Naked	50	2013	2016	**163750080**	**163750089**	**163750082**	**163750081**	5RNE76411000
Ya R Axis	50	1995	1996	**163750110**	-	-	-	3WF176410000
Ya Za Jog Z	50	1995	1995	**163750410**	-	-	-	3GF176410000
Yh Why	50	1998	1998	**163750080**	**163750089**	**163750082**	**163750081**	5RNE76410000
Yh Why	50	2001	2002	**163750080**	**163750089**	**163750082**	**163750081**	5RNE76411000
Yh Why	50	2006	2006	**163750080**	**163750089**	**163750082**	**163750081**	5RNE76410000
Yh Why Euro1	50	1999	2000	**163750080**	**163750089**	**163750082**	**163750081**	5RNE76411000

Modello *Model*	**CC**	**Da** *From*	**A** *To*	**DAYCO** **Standard**	**DAYCO** **Confezione Industriale** *Industrial Packing*	**DAYCO** **Kevlar**	**Codice RMS** *RMS Code*	**OEM**
Yh Why Euro2	50	2003	2005	**163750080**	**163750089**	**163750082**	**163750081**	5RNE76411000
Ym Breeze	50	1994	1995	**163750110**	-	-	-	3WF176410000
Yn F Neo'S 4	50	2009	2012	-	-	-	**163750111**	5C3E76410000
Yn F Neo'S 4	50	2012	2018	-	-	-	**163750111**	5C3E76410000
Yn Neo'S 2T	50	2002	2012	**163750080**	**163750089**	**163750082**	**163750081**	5RNE76411000
Yn Neo'S 2T	50	2012	2016	**163750080**	**163750089**	**163750082**	**163750081**	5RNE76411000
Yn Neo'S Easy	50	2013	2013	**163750080**	**163750089**	**163750082**	**163750081**	5RNE76411000
Yn Neo'S Euro2	50	2002	2003	**163750080**	**163750089**	**163750082**	**163750081**	5RNE76411000
Yn R Neo'S 2T	50	1997	2001	**163750080**	**163750089**	**163750082**	**163750081**	5RNE76411000
Yn R Neo'S 2T	50	2002	2002	**163750080**	**163750089**	**163750082**	**163750081**	5RNE76410000
Yq Aerox	50	2001	2002	**163750080**	**163750089**	**163750082**	**163750081**	5RNE76411000
Yq Aerox	50	2004	2012	**163750080**	**163750089**	**163750082**	**163750081**	5RNE76411000
Yq Aerox R	50	1999	1999	**163750080**	**163750089**	**163750082**	**163750081**	5RNE76410000
Yq Aerox R	50	1999	2000	**163750080**	**163750089**	**163750082**	**163750081**	5RNE76411000
Yq L Aerox Euro2	50	2003	2003	**163750080**	**163750089**	**163750082**	**163750081**	5RNE76411000
Bw'S	100	1999	2001	**163750620**	-	-	-	5FA176410000
Yn Neo'S	100	1999	2002	**163750620**	-	-	-	4VP176410000
Yq Aerox	100	2000	2002	**163750620**	-	-	-	5FA176410000
Vp X-City	125	2008	2011	-	-	**163750800**	-	1B9E76410000
Xc Cygnus R	125	1999	2003	**163750530**	-	-	-	4CW176410200
Xc K Cygnus R	125	1997	1998	**163750530**	-	-	-	4CW176410200
Xc T Cygnus	125	1995	1998	**163750530**	-	-	-	4CW176410200
Xn Teo'S	125	2000	2000	-	-	**163750300**	-	5DS176410000
Xq Maxster	125	2001	2002	-	-	**163750300**	-	5DS176410000
Yp125 Majesty	125	1998	2002	-	-	**163750300**	-	5DS176410000
Yp125E Majesty	125	2003	2005	-	-	**163750300**	-	5NSE76411000
Yp125E Majesty	125	2006	2007	-	-	**163750300**	-	5NSE76410000
Yp125E Majesty	125	2008	2009	-	-	**163750300**	-	5NSE76411000
Yp125R X-Max	125	2006	2012	-	-	**163750800**	-	1B9E76410000
Yp125R X-Max	125	2012	2016	-	-	**163750800**	-	1B9E76410000
Yp125R X-Max Abs	125	2011	2011	-	-	**163750800**	-	1B9E76410000
Yp125Ra X-Max Abs	125	2013	2018	-	-	**163750800**	-	1B9E76410000
Xn Teo'S	150	2001	2002	-	-	**163750300**	-	5DS176410000
Xq Maxster	150	2001	2002	-	-	**163750300**	-	5DS176410000
Yp150 Majesty	150	2000	2002	-	-	**163750300**	-	5DS176410000
Yp180E Majesty	180	2003	2006	-	-	**163750570**	-	5XME76410000
Vp X-City	250	2007	2008	-	-	**163750560**	-	5SEE76410100
Vp X-City	250	2009	2015	-	-	**163750560**	-	5SEE76410200
Yp250 Majesty	250	1996	1998	-	**163750659**	**163750650**	-	5CG176410000
Yp250 Majesty	250	2000	2003	-	**163750659**	**163750650**	-	5CG176410000
Yp250 Majesty Abs	250	2003	2003	-	**163750659**	**163750650**	-	5CG176410000
Yp250 Majesty Dx	250	1998	1999	-	**163750659**	**163750650**	-	5CG176410000
Yp250R Black X-Max	250	2009	2009	-	-	**163750560**	-	5SEE76410200
Yp250R X-Max	250	2005	2012	-	-	**163750560**	-	5SEE76410200
Yp250R X-Max	250	2012	2016	-	-	**163750560**	-	5SEE76410200
Yp250R X-Max Sport	250	2011	2012	-	-	**163750560**	-	5SEE76410200
Yp250Ra X-Max Abs	250	2011	2012	-	-	**163750560**	-	5SEE76410200
Yp250Ra X-Max Abs	250	2012	2016	-	-	**163750560**	-	5SEE76410200
Xc Versity	300	2003	2003	-	-	**163750560**	-	5SEE76410000
Xc Versity	300	2004	2005	-	-	**163750560**	-	5SEE76410200
Xc Versity	300	2006	2006	-	-	**163750560**	-	5SEE76410000
Yp400 Majesty	400	2004	2006	-	-	**163750770**	-	5RU176410000

TABELLA CINGHIE TRASMISSIONE IN ORDINE DI MISURA - *ORDER BY LENGHT*

Codice RMS *RMS Code*	L (mm)	S (mm)	A (mm)	Marca *Brand*
163750130	652	15,3	8	DAYCO
163750170	664	16,5	8	DAYCO
163750220	665	16	8	DAYCO
163751211	669	18	8	DAYCO
163750210	670	18	9,7	DAYCO
163751000	687	17,9	9,4	DAYCO
163750150	700	18	8	DAYCO
163751190	722	17,4	9	DAYCO
163750040	724	17,5	8	DAYCO
163751231	729	18	9,2	DAYCO
163750140	730	15	8	DAYCO
163750050	732	18,5	8	DAYCO
163750030	734	17	8	DAYCO
163750070	736	18	8	DAYCO
163750330	743	18	8	DAYCO
163751200	743	18,8	9	DAYCO
163751120	746	17,7	8,5	DAYCO
163750080	747	16,5	8	DAYCO
163751060	747	17,5	9	DAYCO
163750840	756	18	8	DAYCO
163750160	765	17,5	8	DAYCO
163751030	768	19,3	9,5	DAYCO
163750620	770	17,5	8	DAYCO
163750530	778	22	9	DAYCO
163750320	782	18,4	8	DAYCO
163750410	785	16,6	8	DAYCO
163750110	792	16,5	8	DAYCO
163750090	793	15	8	DAYCO
163750441	795	20	9,8	RMS
163750442	795	20	9,8	DAYCO
163750550	800	20	9,6	DAYCO
163751220	800	17,2	9	DAYCO
163750010	804	17,5	8	DAYCO
163750111	805	17,4	8	RMS
163750120	808	17	9	DAYCO
163750250	811	18,5	8	DAYCO
163750380	814	22,5	10,2	DAYCO
163751080	815	19,7	9,3	DAYCO
163750580	816	18,8	9,4	DAYCO
163750630	820	18	8,2	DAYCO
163750180	823	16,9	8	DAYCO
163750390	823	17,8	9	DAYCO
163750060	826	18,5	8	DAYCO
163750660	826	22	13	DAYCO
163750190	828	22	9,5	DAYCO
163750520	828	16,3	8	DAYCO
163750300	832	22,2	9,6	DAYCO
163750420	832	18,5	9,6	DAYCO
163750200	834	22	9,5	DAYCO
163750570	834	22	9,7	DAYCO
163751070	834	18,7	9,5	DAYCO
163750810	835	22,6	14	DAYCO

Codice RMS *RMS Code*	L (mm)	S (mm)	A (mm)	Marca *Brand*
163750812	835	22,5	13	DAYCO
163751221	835	20	9,7	RMS
163751302	836	21,7	10	DAYCO
163750280	845	22,5	10	DAYCO
163750260	848	18	8	DAYCO
163750431	860	15	8	DAYCO
163750650	872	23	11,5	DAYCO
163750700	893	22,7	11,5	DAYCO
163750720	907	24	11	DAYCO
163751210	915	10	-	DAYCO
163750470	916	22	10,5	DAYCO
163750770	916	29,8	15	DAYCO
163750730	918	22,3	10	DAYCO
163750800	923	22	9,5	DAYCO
163751110	923	23	10,5	DAYCO
163750310	926	22,2	10,2	DAYCO
163751090	930	19,5	9,5	DAYCO
163750600	937	22,3	10,8	DAYCO
163750710	938	22,7	15	DAYCO
163750690	940	22	13,5	DAYCO
163751100	940	18,7	10	DAYCO
163750780	946	23,3	11	DAYCO
163750790	954	22,6	13,2	DAYCO
163750820	996	24	11,5	DAYCO
163750560	1006	22,8	11,5	DAYCO
163750830	1011	27,7	14,2	DAYCO
163751402	1011	24,6	15	DAYCO
163751020	1024	26,7	14	DAYCO
163750880	1025	8,7	14,8	DAYCO
163750680	1036	28	14,2	DAYCO



LEGENDA MISURE - *MEASURES LEGEND*
L= Lunghezza cinghia - *Belt length*
S= Spessore cinghia - *Belt tickness*
A= Altezza dente - *Tooth height*
(Misure fornite dal costruttore - *Measures from supplier)*

TABELLA CINGHIE TRASMISSIONE IN ORDINE DI CODICE - *ORDER BY CODE*

Codice RMS *RMS Code*	L (mm)	S (mm)	A (mm)	Marca *Brand*
163750010	804	17,5	8	DAYCO
163750030	734	17	8	DAYCO
163750040	724	17,5	8	DAYCO
163750050	732	18,5	8	DAYCO
163750060	826	18,5	8	DAYCO
163750070	736	18	8	DAYCO
163750080	747	16,5	8	DAYCO
163750090	793	15	8	DAYCO
163750110	792	16,5	8	DAYCO
163750111	805	17,4	8	RMS
163750120	808	17	9	DAYCO
163750130	652	15,3	8	DAYCO
163750140	730	15	8	DAYCO
163750150	700	18	8	DAYCO
163750160	765	17,5	8	DAYCO
163750170	664	16,5	8	DAYCO
163750180	823	16,9	8	DAYCO
163750190	828	22	9,5	DAYCO
163750200	834	22	9,5	DAYCO
163750210	670	18	9,7	DAYCO
163750220	665	16	8	DAYCO
163750250	811	18,5	8	DAYCO
163750260	848	18	8	DAYCO
163750280	845	22,5	10	DAYCO
163750300	832	22,2	9,6	DAYCO
163750310	926	22,2	10,2	DAYCO
163750320	782	18,4	8	DAYCO
163750330	743	18	8	DAYCO
163750380	814	22,5	10,2	DAYCO
163750390	823	17,8	9	DAYCO
163750410	785	16,6	8	DAYCO
163750420	832	18,5	9,6	DAYCO
163750431	860	15	8	RMS
163750442	795	20	9,8	DAYCO
163750470	916	22	10,5	DAYCO
163750520	828	16,3	8	DAYCO
163750530	778	22	9	DAYCO
163750550	800	20	9,6	DAYCO
163750560	1006	22,8	11,5	DAYCO
163750570	834	22	9,7	DAYCO
163750580	816	18,8	9,4	DAYCO
163750600	937	22,3	10,8	DAYCO
163750620	770	17,5	8	DAYCO
163750630	820	18	8,2	DAYCO
163750650	872	23	11,5	DAYCO
163750660	826	22	13	DAYCO
163750680	1036	28	14,2	DAYCO
163750690	940	22	13,5	DAYCO
163750700	893	22,7	11,5	DAYCO
163750710	938	22,7	15	DAYCO
163750720	907	24	11	DAYCO
163750730	918	22,3	10	DAYCO

Codice RMS *RMS Code*	L (mm)	S (mm)	A (mm)	Marca *Brand*
163750770	916	29,8	15	DAYCO
163750780	946	23,3	11	DAYCO
163750790	954	22,6	13,2	DAYCO
163750800	923	22	9,5	DAYCO
163750810	835	22,6	14	DAYCO
163750820	996	24	11,5	DAYCO
163750830	1011	27,7	14,2	DAYCO
163750840	756	18	8	DAYCO
163750880	1025	8,7	14,8	DAYCO
163751000	687	17,9	9,4	DAYCO
163751020	1024	26,7	14	DAYCO
163751030	768	19,3	9,5	DAYCO
163751060	747	17,5	9	DAYCO
163751070	834	18,7	9,5	DAYCO
163751080	815	19,7	9,3	DAYCO
163751090	930	19,5	9,5	DAYCO
163751100	940	18,7	10	DAYCO
163751110	923	23	10,5	DAYCO
163751120	746	17,7	8,5	DAYCO
163751190	722	17,4	9	DAYCO
163751200	743	18,8	9	DAYCO
163751210	915	10	-	DAYCO
163751211	669	18	8	RMS
163751220	800	17,2	9	DAYCO
163751221	835	20	9,7	RMS
163751231	729	18	9,2	RMS
163751302	836	21,7	10	DAYCO
163751402	1011	24,6	15	DAYCO



LEGENDA MISURE - *MEASURES LEGEND*
L= Lunghezza cinghia - *Belt length*
S= Spessore cinghia - *Belt tickness*
A= Altezza dente - *Tooth height*
(Misure fornite dal costruttore - *Measures from supplier)*

CINGHIE DI TRASMISSIONE JT - *JT TRANSMISSION BELTS*

Modello *Model*	**CC**	**Da** *From*	**A** *To*	**Premium Quality Codice JT** *JT Code*	**Premium Quality Codice RMS** *RMS Code*	**Performance Quality Codice JT** *JT Code*	**Performance Quality Codice RMS** *RMS Code*	**OEM**
APRILIA								
Amico	50	1994	1994	JTB4004	**163756430**	-	-	AP8206109
Amico	50	1996	1998	JTB4004	**163756430**	-	-	AP8206109
Amico Gl-Gle	50	1993	1995	JTB4004	**163756430**	-	-	AP8206109
Amico Lx- Sport-Cat	50	1992	1993	JTB4004	**163756430**	-	-	AP8206109
Area 51	50	1998	2000	JTB4004	**163756430**	-	-	AP8206109
Gulliver	50	1995	1998	JTB4004	**163756430**	-	-	AP8206109
Gulliver Lc	50	1996	1998	JTB4004	**163756430**	-	-	AP8206109
Mojito Custom 2T Motore Piaggio	50	2004	2010	JTB4003	**163756420**	-	-	436864
Rally	50	1995	2003	JTB4004	**163756430**	-	-	AP8206109
Rally Liquid Cooled	50	1996	1999	JTB4004	**163756430**	-	-	AP8206109
Scarabeo	50	1993	2005	JTB4004	**163756430**	-	-	AP8206109
Scarabeo 2T	50	2014	2014	JTB4005	**163756440**	-	-	480852
Scarabeo 2T Eu2 Motore Piaggio	50	2010	2012	JTB4005	**163756440**	-	-	82712R
Scarabeo 2T Net	50	2009	2010	JTB4005	**163756440**	-	-	82712R
Scarabeo 4T	50	2002	2006	JTB4005	**163756440**	-	-	AP8570076
Scarabeo 4T 4V	50	2010	2012	JTB4005	**163756440**	-	-	82712R
Scarabeo 4T 4V	50	2014	2014	JTB4005	**163756440**	-	-	82712R
Scarabeo 4T 4V Net	50	2009	2010	JTB4005	**163756440**	-	-	82712R
Scarabeo 4T Restyling Eu3	50	2006	2009	JTB4005	**163756440**	-	-	82712R
Scarabeo Classic 2T Carb. Euro 4	50	2018	2018	JTB4003	**163756420**	-	-	436864
Scarabeo Quattro	50	2009	2009	JTB4005	**163756440**	-	-	82712R
Scarabeo Street	50	2005	2006	JTB4005	**163756440**	-	-	AP8570124
Scarabeo Street 2T Carb. Euro 4	50	2018	2018	JTB4003	**163756420**	-	-	436864
Scarabeo Street 2T Restyling	50	2006	2009	JTB4005	**163756440**	-	-	82712R
Sonic	50	1998	2007	JTB8005	**163756890**	-	-	AP8206818
Sonic Gp	50	1998	2008	JTB8005	**163756890**	-	-	AP8206818
Sport City One 2T	50	2008	2011	JTB4005	**163756440**	-	-	82712R
Sport City One 4T	50	2008	2010	JTB4005	**163756440**	-	-	82712R
Sr	50	1993	1996	JTB4004	**163756430**	-	-	AP8206109
Sr Iniezione E Carburatore	50	2014	2014	JTB4003	**163756420**	-	-	436864
Sr Liquid Cooled	50	1994	1996	JTB4004	**163756430**	-	-	AP8206109
Sr Motard 2T	50	2012	2014	JTB4005	**163756440**	-	-	480852
Sr Motard 4T 4V	50	2013	2014	JTB4005	**163756440**	-	-	480852
Sr R Factory Ie E Carburatore	50	2010	2014	JTB4003	**163756420**	-	-	436864
Sr R H2O 2T Euro 4	50	2018	2018	JTB4003	**163756420**	-	-	436864
Sr R, R Factory	50	2004	2009	JTB4003	**163756420**	-	-	436864
Sr Stealth, Racing	50	1997	2000	JTB4004	**163756430**	-	-	AP8206109
Sr Street	50	2003	2012	JTB4003	**163756420**	-	-	AP8515110
Sr Www	50	1997	2001	JTB4004	**163756430**	-	-	AP8206109
Scarabeo 4T	100	2001	2005	JTB4109	**163756480**	-	-	AP8551053
Scarabeo 4T	100	2010	2012	JTB4109	**163756480**	-	-	82646R
Scarabeo 4T	100	2014	2014	JTB4109	**163756480**	-	-	82646R
Scarabeo 4T Net	100	2009	2009	JTB4109	**163756480**	-	-	82646R
Scarabeo 4T Net Eu3	100	2010	2010	JTB4109	**163756480**	-	-	82646R
Scarabeo 4T Restyling	100	2006	2009	JTB4109	**163756480**	-	-	82646R
Scarabeo Motore Minarelli	100	2000	2000	JTB4101	**163756460**	-	-	AP8510802
Scarabeo Motore Yamaha	100	2000	2000	JTB4101	**163756460**	-	-	AP8510604
Atlantic	125	2003	2005	JTB4206	**163756530**	JTB4206KR	**163756532**	AP8580247
Atlantic Eu3	125	2010	2012	JTB4206	**163756530**	JTB4206KR	**163756532**	841213
Atlantic Eu3 125-250	125	2006	2008	JTB4206	**163756530**	JTB4206KR	**163756532**	AP8580247
Leonardo	125	1996	1997	-	-	JTB5201KR	**163756672**	AP0280100
Mojito	125	2003	2007	JTB4206	**163756530**	JTB4206KR	**163756532**	AP8580247
Mojito	125	2008	2008	JTB4206	**163756530**	JTB4206KR	**163756532**	841213

Modello *Model*	CC	Da *From*	A *To*	Premium Quality Codice JT *JT Code*	Premium Quality Codice RMS *RMS Code*	Performance Quality Codice JT *JT Code*	Performance Quality Codice RMS *RMS Code*	OEM
Mojito Retro' - Custom	125	1999	2001	JTB4204	**163756510**	-	-	AP8550363
Scarabeo	125	2003	2003	JTB4210	**163756540**	JTB4210KR	**163756542**	AP8575028
Scarabeo	125	2004	2006	JTB4210	**163756540**	JTB4210KR	**163756542**	AP8575042
Scarabeo Motore Piaggio Eu3	125	2006	2006	JTB4210	**163756540**	JTB4210KR	**163756542**	AP8575042
Sport City	125	2004	2006	JTB4210	**163756540**	JTB4210KR	**163756542**	AP8575042
Sport City Cube	125	2008	2010	JTB4210	**163756540**	JTB4210KR	**163756542**	842009
Sport City Euro3	125	2006	2008	JTB4210	**163756540**	JTB4210KR	**163756542**	AP8575042
Sport City One 4T Euro3	125	2008	2011	JTB4206	**163756530**	JTB4206KR	**163756532**	841213
Sport City Street	125	2012	2012	JTB4210	**163756540**	JTB4210KR	**163756542**	842009
Sr	125	1999	2001	-	-	JTB3201KR	**163756282**	AP8550130
Sr Max	125	2011	2014	JTB4206	**163756530**	JTB4206KR	**163756532**	841213
Sr Motard	125	2012	2014	JTB4206	**163756530**	JTB4206KR	**163756532**	841213
Atlantic	200	2003	2005	-	-	JTB4301KR	**163756552**	AP8580246
Atlantic	250	2003	2005	-	-	JTB4403KR	**163756592**	AP8580261
Atlantic Eu3 125-250	250	2006	2008	-	-	JTB4403KR	**163756592**	AP8580261
Leonardo	250	1999	2004	-	-	JTB3401KR	**163756312**	AP8122639
Leonardo St	250	2001	2001	-	-	JTB3401KR	**163756312**	AP8122639
Scarabeo	250	2004	2006	-	-	JTB4402KR	**163756582**	AP8577059
Scarabeo Light	250	2006	2008	-	-	JTB4402KR	**163756582**	841851
Sport City Cube	250	2008	2012	-	-	JTB4402KR	**163756582**	841851
Sport City Euro3	250	2006	2008	-	-	JTB4402KR	**163756582**	AP8577059
Atlantic	300	2010	2012	-	-	JTB4403KR	**163756592**	82941R
Scarabeo Light	300	2009	2010	-	-	JTB4402KR	**163756582**	841851
Sport City Street	300	2012	2012	-	-	JTB4402KR	**163756582**	B013360
Sr Max	300	2011	2014	-	-	JTB4403KR	**163756592**	82941R
Atlantic Sprint 400-500	400	2005	2008	-	-	JTB4601KR	**163756612**	AP8560188
Scarabeo Light 400-500	400	2006	2008	-	-	JTB4601KR	**163756612**	832738
Atlantic	500	2001	2002	-	-	JTB4602KR	**163756622**	AP8560070
Atlantic	500	2003	2004	-	-	JTB4601KR	**163756612**	AP8560188
Scarabeo	500	2003	2006	-	-	JTB4601KR	**163756612**	AP8560188
Scarabeo Light 400-500	500	2006	2008	-	-	JTB4603KR	**163756632**	849090
ARCTIC								
Dvx 250	250	2006	2006	-	-	JTB5402KR	**163756702**	3303-782
BAOTIAN								
Bt49Qt-12A1 50 4T Warrior/Rebel	50	2006	2017	JTB5002	**163756650**	-	-	114001-139QMA-0100
Bt49Qt-12C1 50 4T Rebel	50	2006	2017	JTB5002	**163756650**	-	-	114001-139QMA-0100
Bt49Qt-12D1 50 4T Hero	50	2007	2017	JTB5002	**163756650**	-	-	114001-139QMA-0100
Bt49Qt-12E3 50 4T Rocky	50	2007	2017	JTB5002	**163756650**	-	-	114001-139QMA-0100
Bt49Qt-12F1 50 4T Tanco	50	2007	2017	JTB5002	**163756650**	-	-	114001-139QMA-0100
Bt49Qt-12G1 50 4T	50	2009	2017	JTB5002	**163756650**	-	-	114001-139QMA-0100
Bt49Qt-12P1 50 4T Tiger	50	2008	2017	JTB5002	**163756650**	-	-	114001-139QMA-0100
Bt49Qt-12P2 50 4T	50	2008	2017	JTB5002	**163756650**	-	-	114001-139QMA-0100
Bt49Qt-20A2 50 4T Terminator	50	2009	2012	JTB5002	**163756650**	-	-	114001-139QMA-0100
Bt49Qt-2A 50 4T Big Panther	50	2006	2017	JTB5002	**163756650**	-	-	114001-139QMA-0100
Bt49Qt-2C 50 4T Falcon	50	2009	2017	JTB5002	**163756650**	-	-	114001-139QMA-0100
Bt49Qt-6A4 50 4T	50	2013	2017	JTB5002	**163756650**	-	-	114001-139QMA-0100
Bt49Qt-6B4 50 4T	50	2009	2017	JTB5002	**163756650**	-	-	114001-139QMA-0100
Bt49Qt-9F3 50 4T	50	2009	2017	JTB5002	**163756650**	-	-	114001-139QMA-0100
Bt49Qt-9R3 50 4T	50	2009	2017	JTB5002	**163756650**	-	-	114001-139QMA-0100
Bt49Qt-9S3 50 4T	50	2009	2017	JTB5002	**163756650**	-	-	114001-139QMA-0100
BEELINE								
Veloce 25 4T	25	2009	2014	JTB5002	**163756650**	-	-	-
Veloce 25 4T Gt	25	2009	2012	JTB5002	**163756650**	-	-	-
Veloce 50 4T	50	2009	2014	JTB5002	**163756650**	-	-	-
Veloce 50 4T Dynamic	50	2013	2014	JTB5002	**163756650**	-	-	-
Veloce 50 4T Gt	50	2009	2012	JTB5002	**163756650**	-	-	-
Veloce 50 4T Racing	50	2013	2014	JTB5002	**163756650**	-	-	-

Modello *Model*	CC	Da *From*	A *To*	Premium Quality Codice JT *JT Code*	Premium Quality Codice RMS *RMS Code*	Performance Quality Codice JT *JT Code*	Performance Quality Codice RMS *RMS Code*	OEM
BENELLI								
491 Gt	50	1998	1999	JTB4004	**163756430**	-	-	R16140011A0
491 Racing	50	1998	1999	JTB4004	**163756430**	-	-	R16140011A0
491 Rr	50	1999	2001	JTB4004	**163756430**	-	-	R16140011A0
491 Rr Morini	50	2003	2004	JTB8001	**163756870**	-	-	R013427003000
491 Sp	50	1999	1999	JTB4004	**163756430**	-	-	R16140011A0
491 Sport	50	1998	1999	JTB4004	**163756430**	-	-	R16140011A0
491 St	50	1999	2001	JTB4004	**163756430**	-	-	R16140011A0
491 St Morini	50	2003	2003	JTB8001	**163756870**	-	-	R013427003000
K2	50	1998	2001	JTB4004	**163756430**	-	-	R16140011A0
K2 Liquid Cooled	50	1998	2001	JTB4004	**163756430**	-	-	R16140011A0
Naked	50	2002	2002	JTB4004	**163756430**	-	-	R16140011A0
Naked Morini	50	2003	2004	JTB8001	**163756870**	-	-	R013427003000
Pepe	50	1999	2001	JTB4004	**163756430**	-	-	R16140011A0
Pepe Lx	50	2003	2004	JTB4004	**163756430**	-	-	R16140011A0
K2	100	1999	2001	JTB4101	**163756460**	-	-	R16140641A0
Adiva 125-150	125	2001	2002	JTB4206	**163756530**	JTB4206KR	**163756532**	R13440941A0
Caffe' Nero	125	2011	2012	JTB1203	**163756070**	JTB1203KR	**163756072**	R120024102000
Macis	125	2011	2011	JTB1203	**163756070**	JTB1203KR	**163756072**	R120024102000
Velvet 125-150	125	1999	2001	JTB4202	**163756490**	-	-	R16140631A0
Velvet Touring 125-150	125	2002	2003	JTB4202	**163756490**	-	-	R16140631A0
Adiva 125-150	150	2001	2002	JTB4206	**163756530**	JTB4206KR	**163756532**	R13440941A0
Caffe' Nero	150	2011	2012	JTB1203	**163756070**	JTB1203KR	**163756072**	R120024102000
Macis	150	2012	2013	JTB1203	**163756070**	JTB1203KR	**163756072**	R120024102000
Velvet 125-150	150	1999	2001	JTB4202	**163756490**	-	-	R16140631A0
Velvet Touring 125-150	150	2002	2003	JTB4202	**163756490**	-	-	R16140631A0
Velvet	250	1999	2001	-	-	JTB3401KR	**163756312**	R16040171A0
Velvet Touring	250	2002	2003	-	-	JTB3401KR	**163756312**	R16040171A0
BENZHOU								
Yy50Qt-10 50 4T	50	2008	2017	JTB5002	**163756650**	-	-	-
Yy50Qt-10A 50 4T	50	2009	2014	JTB5002	**163756650**	-	-	-
Yy50Qt-2 50 4T	50	2006	2011	JTB5002	**163756650**	-	-	-
Yy50Qt-26 50 4T	50	2007	2017	JTB5002	**163756650**	-	-	-
Yy50Qt-26A 50 4T Apollo	50	2008	2013	JTB5002	**163756650**	-	-	-
Yy50Qt-31 50 2T	50	2015	2017	JTB5002	**163756650**	-	-	-
Yy50Qt-4 50 4T	50	2008	2012	JTB5002	**163756650**	-	-	-
Yy50Qt-5 50 4T	50	2008	2012	JTB5002	**163756650**	-	-	-
Yy50Qt-6 50 4T Formula One	50	2006	2017	JTB5002	**163756650**	-	-	-
Yy50Qt-6A 50 4T Formula 2000	50	2007	2017	JTB5002	**163756650**	-	-	-
Yy50Qt-6B 50 4T Gt	50	2008	2017	JTB5002	**163756650**	-	-	-
Yy50Qt-6D 50 4T	50	2008	2013	JTB5002	**163756650**	-	-	-
Yy50Qt-6E 50 4T F3000	50	2008	2013	JTB5002	**163756650**	-	-	-
Yy50Qt-7 50 4T	50	2008	2009	JTB5002	**163756650**	-	-	-
Yy50Qt-7A 50 4T Firefox	50	2008	2017	JTB5002	**163756650**	-	-	-
Yy50Qt-8 50 4T	50	2008	2011	JTB5002	**163756650**	-	-	-
BMW								
C1 125	125	2000	2004	-	-	JTB5201KR	**163756672**	11117653432
C1 125 Abs	125	2001	2004	-	-	JTB5201KR	**163756672**	11117653432
BUFFALO/QUELLE								
Hero 50 4T	50	2007	2009	JTB5002	**163756650**	-	-	-
Kvr 50 4T	50	2008	2008	JTB5002	**163756650**	-	-	-
Rebel 50 4T	50	2009	2009	JTB5002	**163756650**	-	-	-
Rocky 50 4T	50	2007	2008	JTB5002	**163756650**	-	-	-
Tanco 50 4T	50	2007	2008	JTB5002	**163756650**	-	-	-
Warrior/Rebel 50 4T	50	2007	2008	JTB5002	**163756650**	-	-	-
Rs 600 50 4T	600	2009	2009	JTB5002	**163756650**	-	-	-
Rs 700 50 4T	700	2009	2009	JTB5002	**163756650**	-	-	-
Rs 750 50 4T	750	2009	2009	JTB5002	**163756650**	-	-	-

Modello *Model*	CC	Da *From*	A *To*	Premium Quality Codice JT *JT Code*	Premium Quality Codice RMS *RMS Code*	Performance Quality Codice JT *JT Code*	Performance Quality Codice RMS *RMS Code*	OEM
CAGIVA								
Cucciolo	125	2000	2000	JTB4204	**163756510**	-	-	800093625
DAELIM								
Message 50	50	1998	1999	JTB7001	**163756770**	-	-	23100-GZ5-0030-H1
Freewing 125 S2	125	2005	2008	JTB8201	**163756900**	-	-	23100-SA1-0000
Freewing 125 S2 Fi	125	2008	2011	JTB8201	**163756900**	-	-	23100-SA1-0000
Ns 125	125	1998	1998	JTB8201	**163756900**	-	-	23100-SA1-0000
Otello 125 Fi	125	2007	2016	JTB8201	**163756900**	-	-	23100-SA1-0000
Otello/Ns 125 Dd Dlx	125	2002	2005	JTB8201	**163756900**	-	-	23100-SA1-0000
S1 125 Fi	125	2007	2016	JTB8201	**163756900**	-	-	23100-SA1-0000
S2 125	125	2005	2008	JTB8201	**163756900**	-	-	23100-SA1-0000
S2 125 Fi	125	2008	2016	JTB8201	**163756900**	-	-	23100-SA1-0000
Sl 125 History	125	2001	2004	JTB8201	**163756900**	-	-	23100-SA1-0000
Sn 125 Fi B-Bone	125	2012	2016	JTB8201	**163756900**	-	-	23100-SA1-0000
Sq 250 S2	250	2006	2009	-	-	JTB5402KR	**163756702**	23100-SZ1-9000
DERBI								
Atlantis 2T	50	2010	2010	JTB4003	**163756420**	-	-	436864
Atlantis 2T Eu2	50	2007	2009	JTB4003	**163756420**	-	-	436864
Atlantis O2	50	2002	2002	JTB4003	**163756420**	-	-	436864
Atlantis O2 Bullet	50	2003	2005	JTB4003	**163756420**	-	-	436864
Atlantis O2 City	50	2003	2006	JTB4003	**163756420**	-	-	436864
Atlantis O2 Red Bullet	50	2003	2003	JTB4003	**163756420**	-	-	436864
Atlantis O2 Two Chic	50	2005	2005	JTB4003	**163756420**	-	-	436864
Boulevard 2T	50	2009	2014	JTB4005	**163756440**	-	-	82712R
Gp1	50	2001	2003	JTB4003	**163756420**	-	-	436864
Gp1 E2	50	2003	2003	JTB4003	**163756420**	-	-	436864
Gp1 Euro2	50	2005	2005	JTB4003	**163756420**	-	-	436864
Gp1 Open Eu2	50	2006	2009	JTB4003	**163756420**	-	-	436864
Gp1 Race Eu2	50	2005	2007	JTB4003	**163756420**	-	-	436864
Sonar 2T	50	2009	2009	JTB4005	**163756440**	-	-	82712R
Variant Sport 2T	50	2012	2012	JTB4005	**163756440**	-	-	82712R
Atlantis 50-100 4T	100	2004	2006	JTB4108	**163756470**	-	-	82619R
Boulevard 4T	100	2010	2011	JTB4108	**163756470**	-	-	829484
Boulevard 125-150	125	2003	2004	JTB4206	**163756530**	JTB4206KR	**163756532**	832023
Boulevard 125-150 Eu2	125	2004	2007	JTB4206	**163756530**	JTB4206KR	**163756532**	841213
Boulevard 4T Eu3	125	2008	2012	JTB4206	**163756530**	JTB4206KR	**163756532**	841213
Gp1 Eu2	125	2006	2006	JTB4206	**163756530**	JTB4206KR	**163756532**	841213
Gp1 Low Seat 125 Eu3	125	2007	2008	JTB4206	**163756530**	JTB4206KR	**163756532**	841213
Rambla 125-250	125	2008	2009	JTB4210	**163756540**	JTB4210KR	**163756542**	842009
Rambla 125-250 E3 2Ver	125	2008	2008	JTB4210	**163756540**	JTB4210KR	**163756542**	842009
Sonar 4T	125	2009	2011	JTB4206	**163756530**	JTB4206KR	**163756532**	841213
Variant Sport 4T E3	125	2012	2012	JTB4206	**163756530**	JTB4206KR	**163756532**	841213
Boulevard 125-150	150	2002	2004	JTB4206	**163756530**	JTB4206KR	**163756532**	832023
Boulevard 125-150 Eu2	150	2004	2007	JTB4206	**163756530**	JTB4206KR	**163756532**	841213
Boulevard 4T E3	150	2010	2010	JTB4206	**163756530**	JTB4206KR	**163756532**	841213
Sonar 4T	150	2009	2009	JTB4206	**163756530**	JTB4206KR	**163756532**	841213
Boulevard Eu2	200	2005	2006	-	-	JTB4301KR	**163756552**	840908
Gp1	250	2006	2007	-	-	JTB4403KR	**163756592**	843963
Gp1 Low Seat 250 Eu3	250	2007	2008	-	-	JTB4403KR	**163756592**	843963
Rambla 125-250	250	2008	2009	-	-	JTB4402KR	**163756582**	841851
Rambla 125-250 E3 2Ver	250	2008	2008	-	-	JTB4402KR	**163756582**	841851
Rambla	300	2010	2011	-	-	JTB4402KR	**163756582**	841851
ECOBIKE								
Bt49Qt-12C1 50 4T Rebel	50	2008	2010	JTB5002	**163756650**	-	-	-
Bt49Qt-12D 50 4T Hero	50	2008	2010	JTB5002	**163756650**	-	-	-
Bt49Qt-12E 50 4T Rocky	50	2009	2010	JTB5002	**163756650**	-	-	-
Bt49Qt-12F 50 4T Tanco	50	2008	2010	JTB5002	**163756650**	-	-	-
Bt49Qt-12P1 50 4T Tiger	50	2009	2010	JTB5002	**163756650**	-	-	-

Modello *Model*	CC	Da *From*	A *To*	Premium Quality Codice JT *JT Code*	Premium Quality Codice RMS *RMS Code*	Performance Quality Codice JT *JT Code*	Performance Quality Codice RMS *RMS Code*	OEM
Bt49Qt-20A2 50 4T Terminator	50	2009	2010	JTB5002	**163756650**	-	-	-
Bt49Qt-9F3 50 4T	50	2009	2010	JTB5002	**163756650**	-	-	-
Bt50Qt-7 50 4T Panther Ii	50	2005	2007	JTB5002	**163756650**	-	-	-
ERING								
Big Panther 50 4T	50	2006	2008	JTB5002	**163756650**	-	-	-
Hero 50 4T	50	2007	2008	JTB5002	**163756650**	-	-	-
Rocky 50 4T	50	2007	2008	JTB5002	**163756650**	-	-	-
Tanco 50 4T	50	2007	2008	JTB5002	**163756650**	-	-	-
Warrior/Rebel 50 4T	50	2006	2008	JTB5002	**163756650**	-	-	-
FLEX								
Tech Fun 25 4T	25	2008	2016	JTB5002	**163756650**	-	-	-
Tech Piacenza 25 4T	25	2011	2016	JTB5002	**163756650**	-	-	-
Tech Thunder 25 4T	25	2017	2018	JTB5002	**163756650**	-	-	-
Tech Topspeed 25 4T	25	2008	2016	JTB5002	**163756650**	-	-	-
Tech Fanroller 50 4T	50	2010	2011	JTB5002	**163756650**	-	-	-
Tech Fun 50 4T	50	2008	2016	JTB5002	**163756650**	-	-	-
Tech Piacenza 50 4T	50	2011	2016	JTB5002	**163756650**	-	-	-
Tech Thunder 50 4T	50	2017	2018	JTB5002	**163756650**	-	-	-
Tech Topspeed 50 4T	50	2008	2018	JTB5002	**163756650**	-	-	-
GARELLI								
Capri	50	2006	2006	JTB5003	**163756660**	-	-	GA01162
Capri Lx	50	2006	2008	JTB5003	**163756660**	-	-	GA01162IT
Ciclone	50	2006	2008	JTB5003	**163756660**	-	-	GA01162IT
Ciclone 2	50	2010	2010	JTB5003	**163756660**	-	-	GA01162IT
City Four	125	2010	2011	JTB1203	**163756070**	JTB1203KR	**163756072**	GA06715
Mosquito 125-150	125	2007	2007	JTB1203	**163756070**	JTB1203KR	**163756072**	GA06715
Noi	125	2008	2011	JTB1203	**163756070**	JTB1203KR	**163756072**	GA06715
Xo'	125	2009	2012	JTB1203	**163756070**	JTB1203KR	**163756072**	GA06715
City Four	150	2010	2011	JTB1203	**163756070**	JTB1203KR	**163756072**	GA06715
Noi	150	2008	2011	JTB1203	**163756070**	JTB1203KR	**163756072**	GA06715
Xo'	150	2009	2012	JTB1203	**163756070**	JTB1203KR	**163756072**	GA06715
GIANTCO								
Bud 50 4T 12 Pollici	50	2012	2015	JTB5002	**163756650**	-	-	-
Cyrus Ii 50 4T	50	2009	2015	JTB5002	**163756650**	-	-	-
Dolphin Twin 50 4T 12 Pollici	50	2009	2015	JTB5002	**163756650**	-	-	-
G-Buddy 50 4T 12 Pollici	50	2011	2015	JTB5002	**163756650**	-	-	-
Lambros 50 Dd 4T Basic	50	2010	2015	JTB5002	**163756650**	-	-	-
Lambros 50 Dd 4T Race	50	2009	2010	JTB5002	**163756650**	-	-	-
Lambros 50 Dd 4T Sport	50	2009	2010	JTB5002	**163756650**	-	-	-
Lambros 50 Dt 4T Basic	50	2010	2015	JTB5002	**163756650**	-	-	-
Lambros 50 Dt 4T Race	50	2009	2010	JTB5002	**163756650**	-	-	-
Lambros 50 Dt 4T Sport	50	2009	2010	JTB5002	**163756650**	-	-	-
Sprint 50 4T Sport	50	2009	2015	JTB5002	**163756650**	-	-	-
Stealth 50 Dt 4T	50	2009	2015	JTB5002	**163756650**	-	-	-
Stealth 50 Dt 4T Naked	50	2009	2015	JTB5002	**163756650**	-	-	-
GILERA								
Dna	50	2000	2002	JTB4005	**163756440**	-	-	82712R
Dna	50	2005	2007	JTB4005	**163756440**	-	-	82712R
Dna Gp Experience	50	2003	2004	JTB4005	**163756440**	-	-	82712R
Easy Moving	50	1995	1996	JTB4007	**163756450**	-	-	431190
Ice	50	2001	2005	JTB4003	**163756420**	-	-	436864
Runner	50	1997	2000	JTB4003	**163756420**	-	-	436864
Runner Poggiali	50	2002	2002	JTB4003	**163756420**	-	-	436864
Runner Purejet	50	2002	2004	JTB4003	**163756420**	-	-	436864
Runner Sp	50	2002	2007	JTB4003	**163756420**	-	-	436864
Runner Sp	50	2010	2012	JTB4003	**163756420**	-	-	436864
Runner Sp Special Edition	50	2007	2007	JTB4003	**163756420**	-	-	436864
Runner Sp St & Simoncelli	50	2008	2009	JTB4003	**163756420**	-	-	436864

Modello *Model*	CC	Da *From*	A *To*	Premium Quality Codice JT *JT Code*	Premium Quality Codice RMS *RMS Code*	Performance Quality Codice JT *JT Code*	Performance Quality Codice RMS *RMS Code*	OEM
Stalker	50	1997	2011	JTB4003	**163756420**	-	-	436864
Stalker Naked	50	2008	2008	JTB4003	**163756420**	-	-	436864
Stalker Special Edition	50	2007	2008	JTB4003	**163756420**	-	-	436864
Storm	50	1994	1995	JTB4002	**163756410**	-	-	430728
Storm Euro2	50	2007	2007	JTB4003	**163756420**	-	-	436864
Typhoon	50	1994	1997	JTB4002	**163756410**	-	-	430728
Typhoon X	50	1998	1999	JTB4002	**163756410**	-	-	430728
Typhoon Xr	50	2000	2000	JTB4003	**163756420**	-	-	436864
Dna 125-180	125	2001	2001	JTB4206	**163756530**	JTB4206KR	**163756532**	487170
Nexus Euro3	125	2007	2008	JTB4206	**163756530**	JTB4206KR	**163756532**	841213
Nexus Euro3 Ie	125	2008	2010	JTB4206	**163756530**	JTB4206KR	**163756532**	841213
Runner 4T St Euro3	125	2008	2016	JTB4206	**163756530**	JTB4206KR	**163756532**	841213
Runner Fx-Fxr 125-180	125	1997	2002	-	-	JTB3201KR	**163756282**	434812
Runner Vx	125	2005	2006	JTB4206	**163756530**	JTB4206KR	**163756532**	841213
Runner Vx 4T Euro3	125	2006	2007	JTB4206	**163756530**	JTB4206KR	**163756532**	841213
Runner Vx Race	125	2006	2006	JTB4206	**163756530**	JTB4206KR	**163756532**	841213
Runner Vx Sc	125	2006	2007	JTB4206	**163756530**	JTB4206KR	**163756532**	841213
Runner Vx-Vxr 125-180	125	2000	2001	JTB4206	**163756530**	JTB4206KR	**163756532**	832023
Runner Vx-Vxr 125-200	125	2002	2004	JTB4206	**163756530**	JTB4206KR	**163756532**	841213
Typhoon	125	1995	1998	-	-	JTB3201KR	**163756282**	434812
Typhoon X-Xr	125	1999	2000	-	-	JTB3201KR	**163756282**	434812
Runner Fx-Fxr 125-180	180	1997	2002	JTB4307	**163756560**	-	-	484497
Runner Vx-Vxr 125-180	180	2000	2001	-	-	JTB4301KR	**163756552**	832623
Dna 125-180	200	2001	2001	-	-	JTB4301KR	**163756552**	827639
Runner Vxr	200	2005	2006	-	-	JTB4301KR	**163756552**	840908
Runner Vxr 4T St Euro3	200	2008	2011	-	-	JTB4301KR	**163756552**	840908
Runner Vxr Euro3	200	2007	2007	-	-	JTB4301KR	**163756552**	840908
Runner Vxr Race	200	2005	2006	-	-	JTB4301KR	**163756552**	840908
Runner Vx-Vxr 125-200	200	2002	2004	-	-	JTB4301KR	**163756552**	840908
Nexus Euro3	250	2006	2007	-	-	JTB4403KR	**163756592**	82941R
Nexus Sp Euro3	250	2006	2007	-	-	JTB4403KR	**163756592**	82941R
Oregon	250	2006	2010	-	-	JTB4403KR	**163756592**	82941R
Nexus Euro3	300	2008	2011	-	-	JTB4403KR	**163756592**	82941R
Fuoco 4T-4V Ie E3 Lt	500	2013	2014	-	-	JTB4603KR	**163756632**	849090
Fuoco Euro3	500	2007	2013	-	-	JTB4603KR	**163756632**	849090
Nexus	500	2003	2005	-	-	JTB4601KR	**163756612**	832738
Nexus Euro3	500	2006	2006	-	-	JTB4601KR	**163756612**	832738
Nexus Euro3	500	2007	2008	-	-	JTB4603KR	**163756632**	849090
Nexus Euro3	500	2009	2011	-	-	JTB4601KR	**163756612**	832738
Nexus Sp Euro3	500	2006	2007	-	-	JTB4601KR	**163756612**	832738
Nexus Sp Euro3	500	2006	2007	-	-	JTB4603KR	**163756632**	849090
GOES								
G 50 Rv 4T	50	2009	2011	JTB5002	**163756650**	-	-	-
HERCULES								
Limbo 25 Ma	25	1995	1995	JTB1004	**163756030**	-	-	-
Sr 50 Samba	50	1994	1995	JTB1004	**163756030**	-	-	-
HONDA								
Nh 50 Ms Lead	50	1985	1995	JTB1003	**163756020**	-	-	23100-CG7-004
Nps 50 Zoomer	50	2005	2012	JTB1001	**163756000**	-	-	23100-GEZ-003
Sa 50 Vision	50	1991	1995	JTB1003	**163756020**	-	-	23100-CG7-004
Sfx 50	50	1996	2000	JTB1004	**163756030**	-	-	23100-GW2-013
Sgx 50 Sky	50	1997	2000	JTB1002	**163756010**	-	-	23100-GBY-901
Sh 50 Scoopy	50	1996	2000	JTB1002	**163756010**	-	-	23100-GBY-901
Sj 50 Bali	50	1995	2001	JTB1004	**163756030**	-	-	23100-GW2-013
Srx 50 Shadow	50	1998	1999	JTB1004	**163756030**	-	-	23100-GW2-013
Sxr 50 Mm	50	1998	2000	JTB1004	**163756030**	-	-	23100-GW2-013
Szx 50 S Super Sport X8R	50	1998	2002	JTB1002	**163756010**	-	-	23100-GBY-901
Szx 50 X Cross Sport X8R	50	1998	2002	JTB1002	**163756010**	-	-	23100-GBY-901

Modello *Model*	CC	Da *From*	A *To*	Premium Quality Codice JT *JT Code*	Premium Quality Codice RMS *RMS Code*	Performance Quality Codice JT *JT Code*	Performance Quality Codice RMS *RMS Code*	OEM
Srx 90 It Shadow	90	1998	2000	JTB1102	**163756040**	-	-	23100-GW3-003
Sj 100 Bali Ex	100	1996	2000	JTB1102	**163756040**	-	-	23100-GW3-003
Nhx 110 Wh Lead	110	2008	2013	JTB1106	**163756050**	-	-	23100-GFM-890
Nsc 110 Mpd Vision	110	2013	2014	JTB1211	**163756130**	-	-	23100-KZL-931
Fes 125 A S-Wing Abs	125	2007	2013	JTB1203	**163756070**	JTB1203KR	**163756072**	23100-KGF-901
Fes 125 A S-Wing Abs	125	2011	2011	JTB1203	**163756070**	JTB1203KR	**163756072**	23100-KGF-901
Fes 125 Pantheon	125	1998	2002	JTB1201	**163756060**	-	-	23100-KFF-900
Fes 125 Pantheon Cbs	125	2003	2004	-	-	JTB1207KR	**163756102**	23100-KGG-911
Fes 125 Pantheon Cbs	125	2005	2007	JTB1203	**163756070**	JTB1203KR	**163756072**	23100-KGF-901
Fes 125 S-Wing	125	2007	2010	JTB1203	**163756070**	JTB1203KR	**163756072**	23100-KGF-901
Nes 125 @/ Arobase	125	2000	2006	JTB1203	**163756070**	JTB1203KR	**163756072**	23100-KGF-901
Pcx 125 Ww125	125	2013	2013	-	-	JTB1206KR	**163756092**	23100-KZR-601
Pcx 125 Ww125Ex2	125	2010	2014	JTB1205	**163756080**	JTB1205KR	**163756082**	23100-KWN-901
Pcx 125 Ww125Ex2	125	2012	2014	-	-	JTB1206KR	**163756092**	23100-KZR-601
Pes 125 Ps I	125	2006	2013	JTB1203	**163756070**	JTB1203KR	**163756072**	23100-KGF-901
Ses 125 Dylan	125	2002	2006	JTB1203	**163756070**	JTB1203KR	**163756072**	23100-KGF-901
Sh 125	125	2001	2004	JTB1203	**163756070**	JTB1203KR	**163756072**	23100-KGF-901
Sh 125 Anc I Mode	125	2014	2016	-	-	JTB1206KR	**163756092**	23100-KZR-601
Sh 125 D I	125	2009	2009	JTB1203	**163756070**	JTB1203KR	**163756072**	23100-KGF-901
Sh 125 I	125	2005	2012	JTB1203	**163756070**	JTB1203KR	**163756072**	23100-KGF-901
Fes 150 Pantheon	150	1998	2002	JTB1201	**163756060**	-	-	23100-KFF-900
Fes 150 S-Wing	150	2007	2009	-	-	JTB1207KR	**163756102**	23100-KGG-911
Nes 150 @/ Arobase	150	2000	2000	JTB1203	**163756070**	JTB1203KR	**163756072**	23100-KGF-901
Nes 150 @/ Arobase	150	2001	2006	-	-	JTB1207KR	**163756102**	23100-KGG-911
Pcx 150 Ww150	150	2012	2012	-	-	JTB1208KR	**163756112**	23100-KZY-701
Pcx 150 Ww150	150	2014	2014	-	-	JTB1208KR	**163756112**	23100-KZY-701
Pes 150 Ps I	150	2006	2010	-	-	JTB1207KR	**163756102**	23100-KGG-911
Sh 150	150	2001	2004	-	-	JTB1207KR	**163756102**	23100-KGG-911
Sh 150 A I Abs	150	2013	2016	JTB1210	**163756120**	-	-	23100-K02-901
Sh 150 I	150	2005	2008	-	-	JTB1207KR	**163756102**	23100-KGG-911
Cn 250 Helix	250	1986	1990	-	-	JTB1401KR	**163756142**	23100-KM1-671
Cn 250 Helix Spazio	250	1991	1999	-	-	JTB1401KR	**163756142**	23100-KM1-671
Fes 250 Foresight	250	1998	2005	JTB1402	**163756150**	-	-	23100-KFG-005
Nss 250 Jazz	250	2001	2001	JTB1402	**163756150**	-	-	23100-KFG-005
Nss 250 Jazz	250	2003	2004	JTB1402	**163756150**	-	-	23100-KFG-005
Nss 250 Jazz Es	250	2001	2004	JTB1402	**163756150**	-	-	23100-KFG-005
Nss 300 A Forza Abs	300	2013	2017	-	-	JTB1403KR	**163756162**	23100-KTW-901
Nss 300 Forza	300	2013	2017	-	-	JTB1403KR	**163756162**	23100-KTW-901
Sh 300 A I Abs	300	2007	2009	-	-	JTB1403KR	**163756162**	23100-KTW-901
Sh 300 A I Abs	300	2011	2017	-	-	JTB1403KR	**163756162**	23100-KTW-901
Sh 300 I	300	2008	2009	-	-	JTB1403KR	**163756162**	23100-KTW-901
Fjs 400 A Sw-T Abs	400	2009	2016	-	-	JTB1501KR	**163756172**	23100-MEF-003
Fjs 400 D Sw-T	400	2009	2009	-	-	JTB1501KR	**163756172**	23100-MEF-003
Fjs 600 A Silver Wing Abs	600	2003	2010	-	-	JTB1701KR	**163756182**	23100-MCT-003
Fjs 600 D Silver Wing	600	2003	2006	-	-	JTB1701KR	**163756182**	23100-MCT-003
Fjs 600 Silver Wing	600	2001	2002	-	-	JTB1701KR	**163756182**	23100-MCT-003
HUATIAN/LINTEX								
Ht50Qt-25 50 4T	50	2007	2014	JTB1102	**163756040**	-	-	-
Ht50Qt-26 50 4T	50	2007	2014	JTB1102	**163756040**	-	-	-
Ht50Qt-29 50 4T	50	2009	2014	JTB1102	**163756040**	-	-	-
Ht50Qt-29A 50 4T	50	2009	2010	JTB1102	**163756040**	-	-	-
Ht50Qt-7 50 4T	50	2007	2010	JTB1102	**163756040**	-	-	-
Ht50Qt-9 50 4T	50	2007	2014	JTB1102	**163756040**	-	-	-
ITALJET								
Formula 50 Ac Dd	50	1995	1997	JTB8001	**163756870**	-	-	338127227
Formula 50 Ac Dd Race	50	1996	1996	JTB8001	**163756870**	-	-	338127227
Formula 50 Ac Dd Sport	50	1998	1998	JTB8001	**163756870**	-	-	338127227
Formula 50 Ac Dt	50	1997	2001	JTB8001	**163756870**	-	-	338127227

Modello *Model*	CC	Da *From*	A *To*	Premium Quality Codice JT *JT Code*	Premium Quality Codice RMS *RMS Code*	Performance Quality Codice JT *JT Code*	Performance Quality Codice RMS *RMS Code*	OEM
Formula 50 Lc Dd	50	1997	2000	JTB8001	**163756870**	-	-	338127227
Jet-Set 50	50	2002	2003	JTB4003	**163756420**	-	-	210436864
Torpedo 50 2T	50	1998	1999	JTB8001	**163756870**	-	-	338127227
Torpedo 50 4T	50	2001	2003	JTB4005	**163756440**	-	-	210480852
Dragster 125	125	1999	2003	JTB4202	**163756490**	-	-	4871702090
Formula 125	125	1997	2001	JTB8001	**163756870**	-	-	338127227
Jet-Set 125	125	2002	2003	JTB4206	**163756530**	JTB4206KR	**163756532**	210487170
Jupiter 125	125	2002	2003	JTB4202	**163756490**	-	-	4871702090
Millennium 125	125	2000	2003	JTB4202	**163756490**	-	-	4871702090
Torpedo 125	125	1999	1999	JTB4204	**163756510**	-	-	210825059
Torpedo 125	125	1999	2003	JTB4202	**163756490**	-	-	4871702090
Torpedo 125	125	2000	2000	JTB4204	**163756510**	-	-	210825059
Torpedo 125	125	2001	2003	JTB4206	**163756530**	JTB4206KR	**163756532**	210487170
Dragster 180	180	1999	2003	JTB4202	**163756490**	-	-	4871702090
JIAJUE								
Jj50Qt-11 50 4T 13 Zoll Cute	50	2012	2015	JTB5002	**163756650**	-	-	-
Jj50Qt-11C 50 4T Phantom	50	2013	2015	JTB5002	**163756650**	-	-	-
Jj50Qt-11D 50 4T Phantom	50	2012	2015	JTB5002	**163756650**	-	-	-
Jj50Qt-13 50 4T Virtuality	50	2009	2015	JTB5002	**163756650**	-	-	-
Jj50Qt-15 50 4T Vogue	50	2012	2015	JTB5002	**163756650**	-	-	-
Jj50Qt-17A 50 4T Matador	50	2009	2015	JTB5002	**163756650**	-	-	-
Jj50Qt-18 50 4T 12 Zoll Alpha	50	2012	2015	JTB5002	**163756650**	-	-	-
Jj50Qt-21 50 4T 12 Zoll Fino	50	2012	2015	JTB5002	**163756650**	-	-	-
Jj50Qt-22 50 4T F35	50	2010	2015	JTB5002	**163756650**	-	-	-
Jj50Qt-22 50 4T Race	50	2012	2015	JTB5002	**163756650**	-	-	-
Jj50Qt-23 50 4T Ardour	50	2009	2015	JTB5002	**163756650**	-	-	-
Jj50Qt-3 50 4T 12 Zoll Revenge	50	2012	2015	JTB5002	**163756650**	-	-	-
Jj50Qt-30A 50 4T Ry8	50	2012	2015	JTB5002	**163756650**	-	-	-
Jj50Qt-31B 50 4T F3	50	2012	2015	JTB5002	**163756650**	-	-	-
Jj50Qt-8A 50 4T Max	50	2012	2015	JTB5002	**163756650**	-	-	-
JINLUN								
Jl50Qt-12A 50 4T	50	2013	2013	JTB5002	**163756650**	-	-	-
Jl50Qt-12B 50 4T	50	2013	2013	JTB5002	**163756650**	-	-	-
Jl50Qt-12C 50 4T	50	2013	2013	JTB5002	**163756650**	-	-	-
Jl50Qt-4 50 4T	50	2008	2013	JTB1102	**163756040**	-	-	-
Jl50Qt-5 50 4T	50	2005	2013	JTB1102	**163756040**	-	-	-
Jl50Qt-6 50 4T	50	2008	2013	JTB1102	**163756040**	-	-	-
Jl50Qt-6A 50 4T	50	2010	2013	JTB5002	**163756650**	-	-	-
Jl50Qt-6B 50 4T	50	2010	2012	JTB5002	**163756650**	-	-	-
Jl50Qt-6C 50 4T	50	2010	2011	JTB5002	**163756650**	-	-	-
Jl50Qt-6D 50 4T	50	2010	2011	JTB5002	**163756650**	-	-	-
Jl50Qt-9 50 4T	50	2009	2013	JTB5002	**163756650**	-	-	-
JMSTAR								
Accipiter 50 4T	50	2009	2009	JTB5002	**163756650**	-	-	-
Aquila 50 4T	50	2013	2016	JTB5002	**163756650**	-	-	-
Eagle 50 4T	50	2009	2016	JTB5002	**163756650**	-	-	-
Falcon 50 4T	50	2009	2016	JTB5002	**163756650**	-	-	-
Nabs 50 4T 12 Pollici	50	2013	2016	JTB5002	**163756650**	-	-	-
Sunfire 50 4T Racing	50	2009	2012	JTB5002	**163756650**	-	-	-
Z-Bike 50 4T	50	2009	2009	JTB5002	**163756650**	-	-	-
Zeus 50 4T	50	2009	2009	JTB5002	**163756650**	-	-	-
Zeus B09 50 4T	50	2013	2016	JTB5002	**163756650**	-	-	-
Zeus B12 50 4T	50	2013	2016	JTB5002	**163756650**	-	-	-
JONWAY								
Yy50Qt-10 50 4T Viper	50	2009	2016	JTB5002	**163756650**	-	-	-
Yy50Qt-12 50 4T Adventure/Eagle	50	2011	2016	JTB5002	**163756650**	-	-	-
Yy50Qt-28A 50 4T Raptor	50	2014	2016	JTB5002	**163756650**	-	-	-
Yy50Qt-28C 50 4T Raptor	50	2014	2016	JTB5002	**163756650**	-	-	-

Modello *Model*	CC	Da *From*	A *To*	Premium Quality Codice JT *JT Code*	Premium Quality Codice RMS *RMS Code*	Performance Quality Codice JT *JT Code*	Performance Quality Codice RMS *RMS Code*	OEM
Yy50Qt-28D 50 4T Raptor	50	2014	2016	JTB5002	**163756650**	-	-	-
Yy50Qt-28E 50 4T Raptor	50	2014	2016	JTB5002	**163756650**	-	-	-
Yy50Qt-29 50 4T Victoria	50	2009	2016	JTB5002	**163756650**	-	-	-
KAWASAKI								
J300 Abs Bef-Befa-Bff-Bffa	300	2014	2015	-	-	JTB5405KR	**163756722**	59011Y004
J300 Abs Bgf-Bgfa	300	2016	2016	-	-	JTB5405KR	**163756722**	59011Y004
J300 Abs Chf-Chfa	300	2017	2017	-	-	JTB5405KR	**163756722**	59011Y004
J300 Aef-Aefa-Aff-Affa	300	2014	2015	-	-	JTB5405KR	**163756722**	59011Y004
J300 Agf-Agfa	300	2016	2016	-	-	JTB5405KR	**163756722**	59011Y004
Kvf Brute Force Cef-Cff-Cgf-Chf-Cjf	300	2014	2018	-	-	JTB5402KR	**163756702**	59011Y003
Kvf Ccf-Cdf	300	2012	2013	-	-	JTB5402KR	**163756702**	59011Y003
KEEWAY								
Agora 4T	50	2011	2011	JTB5003	**163756660**	-	-	229011140000
Atv 50 Ec2	50	2006	2006	JTB8004	**163756880**	-	-	24107B01F000
Atv Off Road	50	2007	2007	JTB8004	**163756880**	-	-	24107B01F000
F-Act	50	2007	2008	JTB8004	**163756880**	-	-	24107B01F000
F-Act Evo	50	2009	2009	JTB8004	**163756880**	-	-	24107B01F000
F-Act Evo Sport	50	2011	2011	JTB8004	**163756880**	-	-	24107B01F000
Flash	50	2007	2008	JTB8004	**163756880**	-	-	24107B01F000
Focus	50	2006	2006	JTB8004	**163756880**	-	-	24107B01F000
Goccia	50	2009	2009	JTB8004	**163756880**	-	-	24107B01F000
Hurricane	50	2006	2008	JTB8004	**163756880**	-	-	24107B01F000
Matrix	50	2006	2008	JTB8004	**163756880**	-	-	24107B01F000
Ry6	50	2010	2010	JTB8004	**163756880**	-	-	24107B01F000
Ry8	50	2008	2008	JTB8004	**163756880**	-	-	24107B01F000
Ry8 Sport	50	2007	2010	JTB8004	**163756880**	-	-	24107B01F000
X-Blade	50	2016	2016	JTB8004	**163756880**	-	-	24107B01F000
City Blade 125 Zenzero 150	125	2014	2014	JTB1203	**163756070**	JTB1203KR	**163756072**	200013160000
City Blade Efi Euro 4	125	2016	2016	JTB1203	**163756070**	JTB1203KR	**163756072**	200013160000
Logik 125-150	125	2012	2012	JTB1203	**163756070**	JTB1203KR	**163756072**	200013160000
Logik Efi Euro 4	125	2017	2017	JTB1203	**163756070**	JTB1203KR	**163756072**	200013160000
Outlook	125	2007	2008	JTB1203	**163756070**	JTB1203KR	**163756072**	200013160000
Outlook Air	125	2012	2012	JTB1203	**163756070**	JTB1203KR	**163756072**	200013160000
Outlook Dr	125	2007	2011	JTB1203	**163756070**	JTB1203KR	**163756072**	200013160000
Silverblade 4T	125	2011	2011	JTB1203	**163756070**	JTB1203KR	**163756072**	200013160000
Logik 125-150	150	2012	2012	JTB1203	**163756070**	JTB1203KR	**163756072**	200013160000
Outlook	150	2007	2008	JTB1203	**163756070**	JTB1203KR	**163756072**	200013160000
Outlook Dr	150	2007	2011	JTB1203	**163756070**	JTB1203KR	**163756072**	200013160000
Outlook Air Efi 125-150-200	200	2010	2010	JTB1203	**163756070**	JTB1203KR	**163756072**	200013160000
KREIDLER								
Galactica 20 25 Dd 4T City	20	2013	2015	JTB5002	**163756650**	-	-	-
Galactica 20 50 Dd 4T City	20	2013	2015	JTB5002	**163756650**	-	-	-
Florett 25 4T City	25	2013	2017	JTB5002	**163756650**	-	-	-
Florett 50 4T City	50	2013	2017	JTB5002	**163756650**	-	-	-
KYMCO								
Agility 2T R16	50	2010	2010	JTB5002	**163756650**	-	-	00107541
Agility 2T R16	50	2012	2012	JTB5002	**163756650**	-	-	00107541
Agility 4T Carry	50	2011	2011	JTB5002	**163756650**	-	-	00107541
Agility 4T R10	50	2006	2008	JTB5003	**163756660**	-	-	00107206
Agility 4T R12	50	2007	2008	JTB5002	**163756650**	-	-	00107541
Agility 4T R16	50	2008	2009	JTB5002	**163756650**	-	-	00107541
Agility 4T R16	50	2012	2012	JTB5002	**163756650**	-	-	00107541
Agility Plus 2T	50	2014	2014	JTB5002	**163756650**	-	-	00107541
Agility Plus 4T	50	2014	2014	JTB5002	**163756650**	-	-	00107541
Agility R12	50	2005	2005	JTB5002	**163756650**	-	-	00107541
Agility R12 Ecs	50	2016	2016	JTB5002	**163756650**	-	-	00107541
Agility Rs	50	2009	2009	JTB5002	**163756650**	-	-	00107541
Agility Rs Naked 2T	50	2010	2010	JTB5002	**163756650**	-	-	00107541

Modello *Model*	**CC**	**Da** *From*	**A** *To*	**Premium Quality Codice JT** *JT Code*	**Premium Quality Codice RMS** *RMS Code*	**Performance Quality Codice JT** *JT Code*	**Performance Quality Codice RMS** *RMS Code*	**OEM**
B&W	50	2002	2002	JTB5002	**163756650**	-	-	00107541
B&W Euro2	50	2003	2003	JTB5002	**163756650**	-	-	00107541
Cx	50	1993	1993	JTB7001	**163756770**	-	-	00107006
Cx Super	50	1994	1997	JTB7001	**163756770**	-	-	00107006
Dink 50 4T	50	2007	2007	JTB5002	**163756650**	-	-	00107541
Dink Classic Euro2	50	2003	2003	JTB5002	**163756650**	-	-	00107541
Dink Lc	50	1998	2002	JTB5002	**163756650**	-	-	00107541
Dj W	50	1994	2000	JTB7001	**163756770**	-	-	00107006
Dj X	50	1991	1992	JTB7001	**163756770**	-	-	00107006
Dj Y	50	1993	1993	JTB7001	**163756770**	-	-	00107006
Fever Zx	50	1999	2000	JTB5001	**163756640**	-	-	00107842
Fever Zx Euro2	50	2003	2004	JTB5001	**163756640**	-	-	00107842
Filly	50	1998	2000	JTB5003	**163756660**	-	-	00107206
Heroism	50	1995	1997	JTB5003	**163756660**	-	-	00107206
K 12	50	1995	2000	JTB5001	**163756640**	-	-	00107842
Kb	50	1995	2000	JTB5001	**163756640**	-	-	00107842
Kxr	50	2004	2004	JTB5003	**163756660**	-	-	00107206
Like 2T	50	2009	2009	JTB5002	**163756650**	-	-	00107541
Like 4T	50	2009	2009	JTB5002	**163756650**	-	-	00107541
Maxxer	50	2005	2005	JTB5003	**163756660**	-	-	00107206
Mxer	50	2002	2003	JTB5003	**163756660**	-	-	00107206
Mxer Euro2	50	2004	2004	JTB5003	**163756660**	-	-	00107206
Mxu	50	2006	2007	JTB5003	**163756660**	-	-	00107206
Mxu Sr	50	2006	2006	JTB5003	**163756660**	-	-	00107206
People	50	1999	2000	JTB5002	**163756650**	-	-	00107541
People	50	2004	2004	JTB5002	**163756650**	-	-	00107541
People Euro2	50	2003	2003	JTB5002	**163756650**	-	-	00107541
People Euro2	50	2008	2008	JTB5002	**163756650**	-	-	00107541
People Euro2	50	2011	2011	JTB5002	**163756650**	-	-	00107541
People S	50	2005	2008	JTB5002	**163756650**	-	-	00107541
People S 4T	50	2006	2008	JTB5002	**163756650**	-	-	00107541
Sento	50	2008	2008	JTB5003	**163756660**	-	-	00107206
Sniper	50	1993	1993	JTB5003	**163756660**	-	-	00107206
Sniper Dd	50	1994	1996	JTB5003	**163756660**	-	-	00107206
Super 8	50	2007	2007	JTB5002	**163756650**	-	-	00107541
Super 8 2T	50	2009	2009	JTB5002	**163756650**	-	-	00107541
Super 8 2T	50	2013	2013	JTB5002	**163756650**	-	-	00107541
Super 8 4T	50	2009	2009	JTB5002	**163756650**	-	-	00107541
Super 8 4T	50	2013	2013	JTB5002	**163756650**	-	-	00107541
Super 9	50	2000	2000	JTB5002	**163756650**	-	-	00107541
Super 9 Sport Euro2	50	2003	2004	JTB5002	**163756650**	-	-	00107541
Top Boy	50	1997	2000	JTB5002	**163756650**	-	-	00107541
Vitality 2T	50	2004	2004	JTB5002	**163756650**	-	-	00107541
Vitality 4T	50	2004	2004	JTB5002	**163756650**	-	-	00107541
Yup	50	2002	2002	JTB5002	**163756650**	-	-	00107541
Yup Euro2	50	2003	2003	JTB5002	**163756650**	-	-	00107541
Agility 4T	125	2006	2006	-	-	JTB5202KR	**163756682**	00127541
Agility 4T Euro3	125	2006	2008	-	-	JTB5202KR	**163756682**	00127541
Agility Carry	125	2011	2011	-	-	JTB5202KR	**163756682**	00127541
Agility Carry Euro4	125	2017	2017	-	-	JTB5202KR	**163756682**	00127541
Agility Plus	125	2014	2014	-	-	JTB5202KR	**163756682**	00127541
Agility Plus E4	125	2016	2016	-	-	JTB5202KR	**163756682**	00127541
Agility R16	125	2008	2009	-	-	JTB5202KR	**163756682**	00127541
Agility R16	125	2012	2012	-	-	JTB5202KR	**163756682**	00127541
Agility Rs	125	2009	2009	-	-	JTB5202KR	**163756682**	00127541
B&W 125-150	125	2000	2000	-	-	JTB5201KR	**163756672**	00127985
B&W 125-150 Euro2	125	2003	2004	-	-	JTB5201KR	**163756672**	00127985
Dink 125 Euro3	125	2006	2007	-	-	JTB5201KR	**163756672**	00127985

Modello *Model*	**CC**	**Da** *From*	**A** *To*	**Premium Quality Codice JT** *JT Code*	**Premium Quality Codice RMS** *RMS Code*	**Performance Quality Codice JT** *JT Code*	**Performance Quality Codice RMS** *RMS Code*	**OEM**
Dink 125-150	125	1997	1998	-	-	JTB5201KR	**163756672**	00127985
Dink Classic 125-150	125	2002	2002	-	-	JTB5201KR	**163756672**	00127985
Dink Classic 125-150 Euro2	125	2003	2003	-	-	JTB5201KR	**163756672**	00127985
Dink Lx 125-150	125	1998	2000	-	-	JTB5201KR	**163756672**	00127985
Grand Dink 125-150	125	2001	2002	-	-	JTB5201KR	**163756672**	00127985
Grand Dink 125-150 Euro2	125	2003	2004	-	-	JTB5201KR	**163756672**	00127985
Heroism	125	1995	1997	-	-	JTB5301KR	**163756692**	00127785
Like	125	2009	2009	-	-	JTB5202KR	**163756682**	00127541
Like Lx	125	2012	2012	-	-	JTB5202KR	**163756682**	00127541
Movie	125	1999	2000	-	-	JTB5301KR	**163756692**	00127785
Movie 125 Euro3	125	2006	2007	-	-	JTB5202KR	**163756682**	00127541
Movie Xl 125-150	125	2001	2001	-	-	JTB5202KR	**163756682**	00127541
Movie Xl 125-150 Euro2	125	2003	2004	-	-	JTB5202KR	**163756682**	00127541
People 125-150	125	1999	2000	-	-	JTB5202KR	**163756682**	00127541
People 125-150 Euro2	125	2003	2003	-	-	JTB5202KR	**163756682**	00127541
People Euro3	125	2007	2008	-	-	JTB5202KR	**163756682**	00127541
People Euro3	125	2011	2011	-	-	JTB5202KR	**163756682**	00127541
People One E4	125	2016	2016	-	-	JTB5202KR	**163756682**	00127541
People One I	125	2013	2013	-	-	JTB5202KR	**163756682**	00127541
People One I Dd	125	2015	2015	-	-	JTB5202KR	**163756682**	00127541
People S	125	2005	2005	-	-	JTB5202KR	**163756682**	00127541
People S Dd Euro3	125	2007	2008	-	-	JTB5202KR	**163756682**	00127541
Super 8	125	2008	2009	-	-	JTB5202KR	**163756682**	00127541
Vivio 125-150	125	2000	2000	-	-	JTB5301KR	**163756692**	00127785
Agility R16	150	2008	2009	-	-	JTB5202KR	**163756682**	00127541
B&W 125-150	150	2000	2000	-	-	JTB5201KR	**163756672**	00127985
B&W 125-150 Euro2	150	2003	2004	-	-	JTB5201KR	**163756672**	00127985
Dink 125-150	150	1997	1998	-	-	JTB5201KR	**163756672**	00127985
Dink Classic 125-150	150	2002	2002	-	-	JTB5201KR	**163756672**	00127985
Dink Classic 125-150 Euro2	150	2003	2003	-	-	JTB5201KR	**163756672**	00127985
Dink Lx 125-150	150	1998	2000	-	-	JTB5201KR	**163756672**	00127985
Grand Dink 125-150	150	2001	2002	-	-	JTB5201KR	**163756672**	00127985
Grand Dink 125-150 Euro2	150	2003	2004	-	-	JTB5201KR	**163756672**	00127985
Heroism	150	1995	1997	-	-	JTB5301KR	**163756692**	00127785
Movie 150 Euro3	150	2006	2007	-	-	JTB5202KR	**163756682**	00127541
Movie Xl 125-150	150	2001	2001	-	-	JTB5202KR	**163756682**	00127541
Movie Xl 125-150 Euro2	150	2003	2004	-	-	JTB5202KR	**163756682**	00127541
People 125-150	150	1999	2000	-	-	JTB5202KR	**163756682**	00127541
People 125-150 Euro2	150	2003	2003	-	-	JTB5202KR	**163756682**	00127541
Vivio 125-150	150	2000	2000	-	-	JTB5301KR	**163756692**	00127785
B&W	250	2000	2000	-	-	JTB5402KR	**163756702**	00127998
B&W Euro2	250	2003	2003	-	-	JTB5402KR	**163756702**	00127998
Grand Dink	250	2001	2002	-	-	JTB5402KR	**163756702**	00127998
Grand Dink Euro2	250	2003	2004	-	-	JTB5402KR	**163756702**	00127998
Kxr	250	2003	2004	-	-	JTB5402KR	**163756702**	00127998
Mxu	250	2005	2005	-	-	JTB5402KR	**163756702**	00127998
People Lc	250	2003	2004	-	-	JTB5404KR	**163756712**	00127543
People S	250	2006	2006	-	-	JTB5404KR	**163756712**	00127543
People S 250I	250	2007	2007	-	-	JTB5404KR	**163756712**	00127543
X Citing	250	2005	2005	-	-	JTB5404KR	**163756712**	00127543
Yup	250	2003	2003	-	-	JTB5402KR	**163756702**	00127998
Downtown 300I	300	2009	2009	-	-	JTB5405KR	**163756722**	00123257
Downtown Abs	300	2010	2010	-	-	JTB5405KR	**163756722**	00123257
Downtown Abs I	300	2011	2016	-	-	JTB5405KR	**163756722**	00123257
Downtown I	300	2011	2011	-	-	JTB5405KR	**163756722**	00123257
K-Xct I	300	2012	2012	-	-	JTB5405KR	**163756722**	00123375
K-Xct I Abs	300	2014	2014	-	-	JTB5405KR	**163756722**	00123375
Maxxer	300	2005	2006	-	-	JTB5402KR	**163756702**	00127998

Modello *Model*	**CC**	**Da** *From*	**A** *To*	**Premium Quality Codice JT** *JT Code*	**Premium Quality Codice RMS** *RMS Code*	**Performance Quality Codice JT** *JT Code*	**Performance Quality Codice RMS** *RMS Code*	**OEM**
Maxxer Onroad	300	2016	2016	-	-	JTB5402KR	**163756702**	00127998
Mxu	300	2005	2006	-	-	JTB5402KR	**163756702**	00127998
Mxu R	300	2010	2010	-	-	JTB5402KR	**163756702**	00127998
People Gti	300	2010	2011	-	-	JTB5405KR	**163756722**	00123257
People Gti	300	2014	2014	-	-	JTB5405KR	**163756722**	00123375
People Gti Abs	300	2012	2012	-	-	JTB5405KR	**163756722**	00123375
People Gti Abs	300	2014	2014	-	-	JTB5405KR	**163756722**	00123375
People Gti Abs E4	300	2016	2016	-	-	JTB5405KR	**163756722**	00123375
People S 300I	300	2008	2008	-	-	JTB5404KR	**163756712**	00127543
X Citing 300I	300	2008	2008	-	-	JTB5501KR	**163756732**	00123195
X Citing 300I R	300	2008	2009	-	-	JTB5501KR	**163756732**	00123195
X-Town Abs	300	2016	2016	-	-	JTB5404KR	**163756712**	00127543
Downtown Abs E4	350	2016	2016	-	-	JTB5405KR	**163756722**	00123375
Downtown I Abs	350	2015	2015	-	-	JTB5405KR	**163756722**	00123375
X Citing I	400	2013	2013	-	-	JTB5502KR	**163756742**	00123429
X Citing I	400	2015	2015	-	-	JTB5502KR	**163756742**	00123429
X Citing I Abs	400	2014	2015	-	-	JTB5502KR	**163756742**	00123429
X Citing I Abs E4	400	2016	2017	-	-	JTB5502KR	**163756742**	00123443
X Citing I S Euro4	400	2018	2018	-	-	JTB5502KR	**163756742**	00123443
X Citing	500	2005	2005	-	-	JTB5601KR	**163756752**	00127038
X Citing 500 R	500	2009	2009	-	-	JTB5601KR	**163756752**	00127038
X Citing 500I	500	2006	2008	-	-	JTB5601KR	**163756752**	00127038
X Citing 500I R	500	2007	2008	-	-	JTB5601KR	**163756752**	00127038
LIFAN								
Lf50Qt-15A 50 4T	50	2006	2013	JTB1102	**163756040**	-	-	-
Lf50Qt8A 50 4T	50	2007	2010	JTB1102	**163756040**	-	-	-
S-Ray 50 4T	50	2009	2012	JTB5002	**163756650**	-	-	-
S-Speeder 50 4T	50	2011	2012	JTB5002	**163756650**	-	-	-
LONGBO								
Lb50Qt-10 50 4T	50	2008	2013	JTB5002	**163756650**	-	-	-
Lb50Qt-15 50 4T	50	2008	2013	JTB5002	**163756650**	-	-	-
LONGJIA								
Lj50Qt-E 50 4T	50	2010	2013	JTB5002	**163756650**	-	-	-
MALAGUTI								
Centro 4T	50	2008	2008	JTB4005	**163756440**	-	-	41701400
Centro Base	50	1993	1994	JTB4004	**163756430**	-	-	71700300
Centro SI	50	1994	1998	JTB4004	**163756430**	-	-	71700300
Centro SI 4T	50	2010	2010	JTB4005	**163756440**	-	-	41701400
Centro SI Kat	50	1999	2000	JTB4004	**163756430**	-	-	71700300
Ciak Master 4T	50	2005	2006	JTB4005	**163756440**	-	-	41701400
Dvd	50	2010	2010	JTB5003	**163756660**	-	-	64040800
F10 Jet Line	50	1992	1998	JTB8005	**163756890**	-	-	71700100
F10 Kat	50	1999	2000	JTB8005	**163756890**	-	-	71700600
F10 Restyling Eu1	50	2001	2002	JTB8005	**163756890**	-	-	71700600
F10 Restyling Eu2-2.3	50	2003	2004	JTB8005	**163756890**	-	-	71700600
F10 Restyling Euro2	50	2002	2003	JTB8005	**163756890**	-	-	71700600
F12 Phantom	50	1994	1998	JTB4004	**163756430**	-	-	71700300
F12 Phantom Euro1	50	1999	2000	JTB4004	**163756430**	-	-	71700300
F12 Phantom Lc	50	1994	1998	JTB4004	**163756430**	-	-	71700300
F12 Phantom Lc Euro1	50	1999	2000	JTB4004	**163756430**	-	-	71700300
F12 Phantom Lc Restyling Eu1	50	2001	2002	JTB4004	**163756430**	-	-	71700300
F12 Phantom Lc Restyling Eu2	50	2002	2002	JTB4004	**163756430**	-	-	71700300
F12 Phantom Lc Restyling Eu2-2.3	50	2003	2004	JTB4004	**163756430**	-	-	71700300
F12 Phantom Lc Twin Disks	50	1998	1998	JTB4004	**163756430**	-	-	71700300
F12 Phantom Restyling Eu1	50	2001	2002	JTB4004	**163756430**	-	-	71700300
F12 Phantom Restyling Eu2	50	2002	2002	JTB4004	**163756430**	-	-	71700300
F12 Phantom Restyling Eu2-2.3	50	2003	2004	JTB4004	**163756430**	-	-	71700300
F15 Fire Fox	50	1996	1998	JTB4004	**163756430**	-	-	71700300

Modello *Model*	CC	Da *From*	A *To*	Premium Quality Codice JT *JT Code*	Premium Quality Codice RMS *RMS Code*	Performance Quality Codice JT *JT Code*	Performance Quality Codice RMS *RMS Code*	OEM
F15 Fire Fox Euro2	50	2002	2003	JTB4004	**163756430**	-	-	71700300
F15 Fire Fox Restyling Euro2-2.3	50	2003	2004	JTB4004	**163756430**	-	-	71700300
F15 Fire Fox Twin Disks & Special	50	1998	1999	JTB4004	**163756430**	-	-	71700300
F15 Fire Fox Twin Disks Digit Kat	50	1998	2000	JTB4004	**163756430**	-	-	71700300
F15 Lc-Tds Restyling Euro 1	50	2001	2001	JTB4004	**163756430**	-	-	71700300
Grizzly 4 Wheels	50	2004	2009	JTB8005	**163756890**	-	-	71700600
Yesterday - Yesterday Euro	50	1997	2000	JTB8005	**163756890**	-	-	71700100
Blog	125	2009	2011	JTB1203	**163756070**	JTB1203KR	**163756072**	65044800
Centro Ie	125	2008	2009	JTB1203	**163756070**	JTB1203KR	**163756072**	65044800
Centro SI	125	2009	2011	JTB1203	**163756070**	JTB1203KR	**163756072**	65044800
Ciak	125	2000	2001	-	-	JTB5202KR	**163756682**	51700600
Ciak Master	125	2004	2004	-	-	JTB5202KR	**163756682**	51700600
Ciak Master Euro 3	125	2006	2006	-	-	JTB5202KR	**163756682**	51700600
Ciak Restyling Euro2	125	2003	2003	-	-	JTB5202KR	**163756682**	51700600
F18 Warrior	125	2000	2002	-	-	JTB5201KR	**163756672**	51700300
Madison	125	1999	2001	JTB4202	**163756490**	-	-	71700700
Madison R Restyling	125	2002	2002	JTB4202	**163756490**	-	-	71700700
Madison R Restyling Euro2	125	2003	2004	JTB4202	**163756490**	-	-	71700900
Phantom Max	125	2003	2003	JTB4202	**163756490**	-	-	71700900
Ciak	150	2000	2002	-	-	JTB5202KR	**163756682**	51700600
Ciak Master	150	2004	2004	-	-	JTB5202KR	**163756682**	51700600
Ciak Restyling Euro2	150	2003	2003	-	-	JTB5202KR	**163756682**	51700600
F18 Warrior	150	2000	2002	-	-	JTB5201KR	**163756672**	51700300
Madison T	150	1999	2001	JTB4202	**163756490**	-	-	71700700
Blog	160	2009	2011	JTB1203	**163756070**	JTB1203KR	**163756072**	65044800
Centro Ie	160	2008	2009	JTB1203	**163756070**	JTB1203KR	**163756072**	65044800
Centro SI	160	2009	2011	JTB1203	**163756070**	JTB1203KR	**163756072**	65044800
Madison R	180	2001	2002	-	-	JTB4301KR	**163756552**	41700300
Madison S Restyling	200	2002	2002	-	-	JTB4301KR	**163756552**	41700300
Madison S Restyling Euro2	200	2003	2003	-	-	JTB4301KR	**163756552**	41700700
Phantom Max	200	2003	2003	-	-	JTB4301KR	**163756552**	41700700
Madison 3	250	2006	2009	-	-	JTB4403KR	**163756592**	41700900
Madison Rs Restyling	250	2004	2004	-	-	JTB4403KR	**163756592**	41700900
Password	250	2005	2006	-	-	JTB3402KR	**163756322**	71701100
Password Eu3	250	2007	2008	-	-	JTB3402KR	**163756322**	71701100
Phantom Max	250	2004	2004	-	-	JTB4403KR	**163756592**	41700900
Spidermax Gt	500	2004	2005	-	-	JTB4601KR	**163756612**	41701100
Spidermax Gt Euro3	500	2006	2006	-	-	JTB4601KR	**163756612**	41701100
Spidermax Rs	500	2008	2008	-	-	JTB4603KR	**163756632**	41701600
MBK								
Cr Z Target	50	1991	1995	JTB8005	**163756890**	-	-	3WF176410000
Cs Mach G Euro1	50	2002	2003	JTB4004	**163756430**	-	-	5RNE76410000
Cs Mach G Euro2	50	2002	2004	JTB4004	**163756430**	-	-	5RNE76410000
Cw Booster	50	1990	1991	JTB4004	**163756430**	-	-	5RNE76410000
Cw Booster	50	2001	2002	JTB4004	**163756430**	-	-	5RNE76410000
Cw Booster	50	2004	2004	JTB4004	**163756430**	-	-	5RNE76410000
Cw Booster Naked	50	2003	2003	JTB4004	**163756430**	-	-	5RNE76410000
Cw Booster Spirit	50	1996	1998	JTB4004	**163756430**	-	-	5RNE76410000
Cw Booster Spirit (Ita)	50	1999	2000	JTB4004	**163756430**	-	-	5RNE76410000
Cw Booster Spirit Euro2	50	2002	2003	JTB4004	**163756430**	-	-	5RNE76410000
Cw L Booster	50	2001	2003	JTB4004	**163756430**	-	-	5RNE76410000
Cw L Booster Spirit	50	2003	2003	JTB4004	**163756430**	-	-	5RNE76410000
Cw R Booster Road (Ita)	50	1994	1995	JTB4004	**163756430**	-	-	5RNE76410000
Cw Rs Booster Ng	50	2001	2002	JTB4004	**163756430**	-	-	5RNE76411000
Cw Rs Booster Ng	50	2003	2003	JTB4004	**163756430**	-	-	5RNE76410000
Cw Rs Booster Ng (Ita)	50	1995	1999	JTB4004	**163756430**	-	-	5RNE76410000
Cw Rs Booster Ng Euro1	50	1999	2000	JTB4004	**163756430**	-	-	5RNE76411000
Cw Rsp Booster Rocket (Ita)	50	1997	1998	JTB4004	**163756430**	-	-	5RNE76411000

Modello *Model*	CC	Da *From*	A *To*	Premium Quality Codice JT *JT Code*	Premium Quality Codice RMS *RMS Code*	Performance Quality Codice JT *JT Code*	Performance Quality Codice RMS *RMS Code*	OEM
Cw Rsx Booster Track (Ita)	50	1996	1998	JTB4004	**163756430**	-	-	5RNE76410000
Cw Sp Booster Spirit Euro2	50	2002	2002	JTB4004	**163756430**	-	-	5RNE76410000
Ew Stunt	50	2000	2002	JTB4004	**163756430**	-	-	5RNE76410000
Ya R Forte (Che-Ita)	50	1994	1996	JTB8005	**163756890**	-	-	3WF176410000
Ye Evolis (Ita)	50	1992	1995	JTB8005	**163756890**	-	-	3WF176410000
Yh Flipper	50	1998	1998	JTB4004	**163756430**	-	-	5RNE76410000
Yh Flipper	50	2001	2002	JTB4004	**163756430**	-	-	5RNE76411000
Yh Flipper Euro2	50	2003	2004	JTB4004	**163756430**	-	-	5RNE76411000
Ym Fizz (Ita)	50	1994	1995	JTB8005	**163756890**	-	-	3WF176410000
Yn R Ovetto (Che-Ita)	50	1997	2001	JTB4004	**163756430**	-	-	5RNE76411000
Yn R Ovetto Euro1	50	2002	2004	JTB4004	**163756430**	-	-	5RNE76411000
Yn R Ovetto Euro2	50	2002	2003	JTB4004	**163756430**	-	-	5RNE76410000
Yq L Nitro Jaguar	50	2004	2004	JTB4004	**163756430**	-	-	5RNE76410000
Yq Nitro	50	2001	2002	JTB4004	**163756430**	-	-	5RNE76410000
Yq Nitro	50	2004	2004	JTB4004	**163756430**	-	-	5RNE76411000
Yq Nitro (Ita)	50	1997	2000	JTB4004	**163756430**	-	-	5RNE76410000
Yq Nitro Euro2	50	2003	2003	JTB4004	**163756430**	-	-	5RNE76410000
Yn Ovetto	100	2000	2002	JTB4101	**163756460**	-	-	5FA176410000
Yq Nitro	100	2000	2002	JTB4101	**163756460**	-	-	4VP176410000
Yw Booster	100	1999	2001	JTB4101	**163756460**	-	-	4VP176410000
Xc Flame F	125	2000	2000	JTB4203	**163756500**	-	-	4CW176410200
Xc K Flame R	125	1996	1999	JTB4203	**163756500**	-	-	4CW176410200
Xc T Flame	125	1995	1999	JTB4203	**163756500**	-	-	4CW176410200
Xn Doodo	125	2000	2001	JTB4202	**163756490**	-	-	5DS176410000
Xq Thunder	125	2001	2002	JTB4202	**163756490**	-	-	5DS176410000
Yp Skyliner	125	1998	2002	JTB4202	**163756490**	-	-	5DS176410000
Xn Doodo	150	2001	2002	JTB4202	**163756490**	-	-	5DS176410000
Xq Thunder	150	2001	2002	JTB4202	**163756490**	-	-	5DS176410000
Yp Skyliner	150	2000	2002	JTB4202	**163756490**	-	-	5DS176410000
Yp Skyliner	250	2000	2003	-	-	JTB3401KR	**163756312**	5CG176410000
Yp Skyliner Abs	250	2003	2003	-	-	JTB3401KR	**163756312**	5CG176410000
Xc Kilibre	300	2003	2003	-	-	JTB3402KR	**163756322**	5SEE76410000
MOTOWELL								
Magnet 50 4T	50	2010	2012	JTB5002	**163756650**	-	-	-
Yoyo 50 4T	50	2010	2017	JTB5002	**163756650**	-	-	-
PEGASUS								
S 25 Gp 4T	25	2010	2011	JTB5002	**163756650**	-	-	-
P 50 4T Classic	50	2010	2011	JTB5002	**163756650**	-	-	-
S 50 Gp 4T	50	2010	2015	JTB5002	**163756650**	-	-	-
PEUGEOT								
Zenith 25 Ma	25	1995	1997	JTB1004	**163756030**	-	-	723590
Zenith 25 Na	25	1998	2000	JTB1004	**163756030**	-	-	723590
Buxy 50	50	1995	1997	JTB6001	**163756760**	-	-	729171
Buxy 50 Rs	50	1996	1997	JTB6001	**163756760**	-	-	729171
Elyseo 50 45 Km/h	50	2002	2003	JTB6001	**163756760**	-	-	729171
Elyseo 50 50 Km/h	50	1998	2001	JTB6001	**163756760**	-	-	729171
Elystar 50 Advantage	50	2006	2009	JTB6001	**163756760**	-	-	729171
Elystar 50 Sbc Tsdi	50	2003	2007	JTB6001	**163756760**	-	-	729171
Jet Force 50 C-Tech	50	2005	2009	JTB6001	**163756760**	-	-	729171
Jet Force 50 C-Tech Rally Victories	50	2006	2007	JTB6001	**163756760**	-	-	729171
Jet Force 50 C-Tech Rcup	50	2007	2009	JTB6001	**163756760**	-	-	729171
Jet Force 50 Darkside	50	2008	2015	JTB6001	**163756760**	-	-	729171
Jet Force 50 Ice Blade	50	2010	2012	JTB6001	**163756760**	-	-	729171
Jet Force 50 Tsdi	50	2003	2007	JTB6001	**163756760**	-	-	729171
Jet Force 50 Tsdi Sbc	50	2003	2006	JTB6001	**163756760**	-	-	729171
Kisbee 50 4T	50	2011	2015	JTB1102	**163756040**	-	-	779631
Kisbee 50 4T Sportline	50	2014	2015	JTB1102	**163756040**	-	-	779631
Kisbee 50 Rs 4T	50	2013	2015	JTB1102	**163756040**	-	-	779631

Modello *Model*	CC	Da *From*	A *To*	Premium Quality Codice JT *JT Code*	Premium Quality Codice RMS *RMS Code*	Performance Quality Codice JT *JT Code*	Performance Quality Codice RMS *RMS Code*	OEM
Looxor 50	50	2002	2006	JTB8001	**163756870**	-	-	724730
Ludix 50 2T Pro	50	2008	2011	JTB6001	**163756760**	-	-	729171
Ludix 50 Classic 1 Seater	50	2004	2007	JTB6001	**163756760**	-	-	729171
Ludix 50 Classic 2 Seater	50	2006	2007	JTB6001	**163756760**	-	-	729171
Ludix 50 Elegance	50	2004	2007	JTB6001	**163756760**	-	-	729171
Ludix 50 Ep	50	2008	2011	JTB6001	**163756760**	-	-	729171
Ludix 50 Ii Dt One 2 Sitzer Luxe	50	2008	2011	JTB6001	**163756760**	-	-	729171
Ludix 50 Ii Dt One Luxe 2 Sitzer	50	2008	2011	JTB6001	**163756760**	-	-	729171
Ludix 50 Ii Elegance	50	2008	2011	JTB6001	**163756760**	-	-	729171
Ludix 50 Ii Lc Blaster Ice Blade	50	2010	2011	JTB6001	**163756760**	-	-	729171
Ludix 50 Ii Lc Blaster Rcup	50	2008	2009	JTB6001	**163756760**	-	-	729171
Ludix 50 Ii Lc Blaster Rs12	50	2008	2011	JTB6001	**163756760**	-	-	729171
Ludix 50 Ii Snake Furious	50	2008	2011	JTB6001	**163756760**	-	-	729171
Ludix 50 Ii Snake Naked 10 Inch	50	2008	2011	JTB6001	**163756760**	-	-	729171
Ludix 50 Ii Trend 12 Inch	50	2008	2011	JTB6001	**163756760**	-	-	729171
Ludix 50 Ii Tt One 1 Sitzer	50	2008	2011	JTB6001	**163756760**	-	-	729171
Ludix 50 Ii Tt One 2 Sitzer	50	2008	2012	JTB6001	**163756760**	-	-	729171
Ludix 50 Lc Blaster 10 Zoll	50	2005	2007	JTB6001	**163756760**	-	-	729171
Ludix 50 Lc Rs Blaster 12 Zoll	50	2007	2007	JTB6001	**163756760**	-	-	729171
Ludix 50 One 1 Sitzer	50	2004	2007	JTB6001	**163756760**	-	-	729171
Ludix 50 One 2 Sitzer	50	2006	2007	JTB6001	**163756760**	-	-	729171
Ludix 50 Pro 2T	50	2008	2011	JTB6001	**163756760**	-	-	729171
Ludix 50 Snake	50	2004	2007	JTB6001	**163756760**	-	-	729171
Ludix 50 Trend 10 Inch	50	2004	2007	JTB6001	**163756760**	-	-	729171
Speedake 50	50	1995	1997	JTB6001	**163756760**	-	-	729171
Speedfight 1 50 Ac Dt	50	1997	2000	JTB6001	**163756760**	-	-	729171
Speedfight 1 50 Lc Dd	50	1999	2000	JTB6001	**163756760**	-	-	729171
Speedfight 1 50 Lc Dt	50	1997	1998	JTB6001	**163756760**	-	-	729171
Speedfight 2 50 Ac Dd Ultimate Edition	50	2008	2009	JTB6001	**163756760**	-	-	729171
Speedfight 2 50 Ac Dt	50	2001	2009	JTB6001	**163756760**	-	-	729171
Speedfight 2 50 Ac Dt Iron-X	50	2007	2007	JTB6001	**163756760**	-	-	729171
Speedfight 2 50 Ac Dt Motor Sport	50	2007	2007	JTB6001	**163756760**	-	-	729171
Speedfight 2 50 Ac Dt Rally Victories	50	2006	2007	JTB6001	**163756760**	-	-	729171
Speedfight 2 50 Ac Dt Rcup	50	2007	2009	JTB6001	**163756760**	-	-	729171
Speedfight 2 50 Ac Dt Silver Sport	50	2004	2007	JTB6001	**163756760**	-	-	729171
Speedfight 2 50 Ac Dt Wrc 307	50	2005	2005	JTB6001	**163756760**	-	-	729171
Speedfight 2 50 Lc Dd	50	2001	2009	JTB6001	**163756760**	-	-	729171
Speedfight 2 50 Lc Dd Furious	50	2003	2003	JTB6001	**163756760**	-	-	729171
Speedfight 2 50 Lc Dd Iron-X	50	2007	2007	JTB6001	**163756760**	-	-	729171
Speedfight 2 50 Lc Dd Motor Sport	50	2007	2007	JTB6001	**163756760**	-	-	729171
Speedfight 2 50 Lc Dd Rally Victories	50	2006	2007	JTB6001	**163756760**	-	-	729171
Speedfight 2 50 Lc Dd Rcup	50	2007	2009	JTB6001	**163756760**	-	-	729171
Speedfight 2 50 Lc Dd Silver Sport	50	2004	2007	JTB6001	**163756760**	-	-	729171
Speedfight 2 50 Lc Dd Ultimate Edition	50	2008	2009	JTB6001	**163756760**	-	-	729171
Speedfight 2 50 Lc Dd Wrc 206	50	2003	2004	JTB6001	**163756760**	-	-	729171
Speedfight 2 50 Lc Dd Wrc 307	50	2005	2005	JTB6001	**163756760**	-	-	729171
Speedfight 2 50 Lc Dd X-Race	50	2001	2003	JTB6001	**163756760**	-	-	729171
Speedfight 3 50 Ac Dt	50	2009	2011	JTB6001	**163756760**	-	-	729171
Speedfight 3 50 Ac Dt Rs	50	2010	2011	JTB6001	**163756760**	-	-	729171
Speedfight 3 50 Lc Dd	50	2009	2011	JTB6001	**163756760**	-	-	729171
Speedfight 3 50 Lc Dd Rs	50	2010	2011	JTB6001	**163756760**	-	-	729171
Squab 50	50	1996	1997	JTB6001	**163756760**	-	-	729171
Sv 50 Lm Dt	50	1997	1998	JTB1004	**163756030**	-	-	723590
Sv 50 Tt	50	1993	1997	JTB1004	**163756030**	-	-	723590
Sv 50 Tt Junior	50	1993	1996	JTB1004	**163756030**	-	-	723590
Tkr 50	50	2001	2009	JTB6001	**163756760**	-	-	729171
Tkr 50 Furious	50	2003	2011	JTB6001	**163756760**	-	-	729171
Tkr 50 Metal-X	50	2002	2003	JTB6001	**163756760**	-	-	729171

Modello *Model*	CC	Da *From*	A *To*	Premium Quality Codice JT *JT Code*	Premium Quality Codice RMS *RMS Code*	Performance Quality Codice JT *JT Code*	Performance Quality Codice RMS *RMS Code*	OEM
Tkr 50 Rally Victories	50	2006	2007	JTB6001	**163756760**	-	-	729171
Tkr 50 Rcup	50	2008	2009	JTB6001	**163756760**	-	-	729171
Tkr 50 Streetboard	50	2001	2001	JTB6001	**163756760**	-	-	729171
Tkr 50 Streetzone	50	2003	2003	JTB6001	**163756760**	-	-	729171
Tkr 50 Wrc 307	50	2005	2005	JTB6001	**163756760**	-	-	729171
Trekker 50 Off Road	50	1998	2000	JTB6001	**163756760**	-	-	729171
Trekker 50 Road	50	1998	2000	JTB6001	**163756760**	-	-	729171
Trekker 50 Streetboard	50	1999	2000	JTB6001	**163756760**	-	-	729171
V-Clic 50 4T	50	2007	2014	JTB5003	**163756660**	-	-	759223
V-Clic 50 4T Silver Sport	50	2008	2008	JTB5003	**163756660**	-	-	759223
Vivacity 50	50	1999	2004	JTB6001	**163756760**	-	-	729171
Vivacity 50 2	50	2005	2009	JTB6001	**163756760**	-	-	729171
Vivacity 50 2 Blueline	50	2005	2005	JTB6001	**163756760**	-	-	729171
Vivacity 50 2 Compact	50	2005	2007	JTB6001	**163756760**	-	-	729171
Vivacity 50 2 Motorsport	50	2007	2009	JTB6001	**163756760**	-	-	729171
Vivacity 50 2 Rs	50	2008	2008	JTB6001	**163756760**	-	-	729171
Vivacity 50 2 Silver Sport	50	2005	2007	JTB6001	**163756760**	-	-	729171
Vivacity 50 2 Sportline 4	50	2006	2009	JTB6001	**163756760**	-	-	729171
Vivacity 50 3 2T New	50	2008	2017	JTB6001	**163756760**	-	-	729171
Vivacity 50 Blueline	50	2004	2004	JTB6001	**163756760**	-	-	729171
Vivacity 50 Compact	50	2003	2004	JTB6001	**163756760**	-	-	729171
Vivacity 50 Silver Sport	50	2004	2004	JTB6001	**163756760**	-	-	729171
Vivacity 50 Sportline	50	2001	2001	JTB6001	**163756760**	-	-	729171
Vivacity 50 Sportline 2	50	2002	2002	JTB6001	**163756760**	-	-	729171
Vivacity 50 Sportline 3	50	2003	2003	JTB6001	**163756760**	-	-	729171
Zenith 50 Lm	50	1996	1997	JTB6001	**163756760**	-	-	729171
Zenith 50 Ln	50	1998	1998	JTB6001	**163756760**	-	-	729171
Zenith 50 M	50	1995	1997	JTB6001	**163756760**	-	-	729171
Zenith 50 N	50	1998	2000	JTB6001	**163756760**	-	-	729171
Sv 100	100	1998	1998	-	-	JTB5201KR	**163756672**	740820
Trekker 100 Road	100	1998	2000	-	-	JTB5201KR	**163756672**	740820
Looxor 125	125	2003	2006	JTB4206	**163756530**	JTB4206KR	**163756532**	756528
Satelis 250 Ie Executive Abs	250	2007	2009	-	-	JTB4403KR	**163756592**	758692
Satelis 250 Ie Premium	250	2006	2011	-	-	JTB4403KR	**163756592**	758692
Satelis 250 Ie Rs Premium	250	2008	2011	-	-	JTB4403KR	**163756592**	758692
Geopolis 500 Premium	400	2008	2012	-	-	JTB4601KR	**163756612**	759676
Satelis 500 Executive Abs	400	2007	2009	-	-	JTB4601KR	**163756612**	759676
Satelis 500 Premium	400	2006	2012	-	-	JTB4601KR	**163756612**	759676
Satelis 500 Premium Rs	400	2008	2011	-	-	JTB4601KR	**163756612**	759676
Satelis 500 Urban Abs	400	2010	2011	-	-	JTB4601KR	**163756612**	759676
Geopolis 500 Premium	500	2008	2012	-	-	JTB4603KR	**163756632**	759878
Satelis 500 Evolution Urban Abs	500	2010	2011	-	-	JTB4603KR	**163756632**	759878
Satelis 500 Executive Abs	500	2007	2011	-	-	JTB4603KR	**163756632**	759878
Satelis 500 Premium	500	2006	2012	-	-	JTB4603KR	**163756632**	759878
PIAGGIO								
Diesis	50	2001	2001	JTB4003	**163756420**	-	-	436864
Fly 2T	50	2005	2007	JTB4005	**163756440**	-	-	82712R
Fly 2T	50	2010	2011	JTB4005	**163756440**	-	-	82712R
Free	50	1992	1994	JTB4002	**163756410**	-	-	430728
Free Delivery	50	2000	2001	JTB4003	**163756420**	-	-	436864
Free Fl	50	1995	2001	JTB4002	**163756410**	-	-	430728
Free Fl	50	2002	2002	JTB4003	**163756420**	-	-	436864
Liberty	50	1997	2005	JTB4005	**163756440**	-	-	82712R
Liberty 2T	50	2006	2008	JTB4005	**163756440**	-	-	82712R
Liberty 2T Rst	50	2004	2004	JTB4005	**163756440**	-	-	82712R
Liberty 2T Sport	50	2006	2008	JTB4005	**163756440**	-	-	82712R
Liberty 4T	50	2000	2002	JTB4005	**163756440**	-	-	82712R
Liberty 4T	50	2005	2008	JTB4005	**163756440**	-	-	82712R

Modello *Model*	**CC**	**Da** *From*	**A** *To*	**Premium Quality Codice JT** *JT Code*	**Premium Quality Codice RMS** *RMS Code*	**Performance Quality Codice JT** *JT Code*	**Performance Quality Codice RMS** *RMS Code*	**OEM**
Liberty 4T Delivery - Single	50	2010	2014	JTB4005	**163756440**	-	-	82712R
Liberty 4T Delivery Tnt	50	2009	2009	JTB4005	**163756440**	-	-	82712R
Liberty 4T Iget Corporate E4	50	2018	2018	JTB4005	**163756440**	-	-	480852
Liberty 4T Ptt - Double - Nexive	50	2009	2015	JTB4005	**163756440**	-	-	82712R
Liberty 4T Ptt (Deu)	50	2007	2012	JTB4005	**163756440**	-	-	82712R
Liberty 4T Rst	50	2004	2004	JTB4005	**163756440**	-	-	82712R
Liberty 4T Sport	50	2006	2008	JTB4005	**163756440**	-	-	82712R
Liberty Iget 4T 3V 25Km/h	50	2016	2016	JTB4005	**163756440**	-	-	82712R
Liberty Iget 4T 3V Ie	50	2015	2017	JTB4005	**163756440**	-	-	480852
Liberty Iget 4T 3V Ie E4 Emea	50	2017	2018	JTB4005	**163756440**	-	-	480852
Liberty Iget 4T 3V Ie E4 Emea 25Km/h	50	2017	2018	JTB4005	**163756440**	-	-	480852
Liberty Moc 4T & Elle	50	2009	2016	JTB4005	**163756440**	-	-	82712R
Liberty Ptt Eu2	50	2004	2005	JTB4005	**163756440**	-	-	82712R
Nrg	50	1994	1996	JTB4002	**163756410**	-	-	430728
Nrg Extreme	50	1999	2000	JTB4003	**163756420**	-	-	436864
Nrg Mc3	50	2001	2004	JTB4003	**163756420**	-	-	436864
Nrg Power Dd	50	2005	2017	JTB4003	**163756420**	-	-	436864
Nrg Power Dd Serie Speciale	50	2007	2012	JTB4003	**163756420**	-	-	436864
Nrg Power Dt	50	2006	2015	JTB4003	**163756420**	-	-	436864
Nrg Power Dt Serie Speciale	50	2007	2008	JTB4003	**163756420**	-	-	436864
Nrg Purejet	50	2002	2004	JTB4003	**163756420**	-	-	436864
Nrg Rst Mc2	50	1996	1997	JTB4002	**163756410**	-	-	430728
Nrg Rst Mc2	50	1998	1998	JTB4003	**163756420**	-	-	436864
Ntt	50	1995	1996	JTB4002	**163756410**	-	-	430728
Quartz	50	1992	1996	JTB4007	**163756450**	-	-	431190
Sfera Maquillage 2	50	1994	1994	JTB4007	**163756450**	-	-	431190
Sfera Rst	50	1995	1997	JTB4007	**163756450**	-	-	431190
Typhoon	50	2001	2011	JTB4003	**163756420**	-	-	436864
Typhoon 2T Euro2	50	2010	2016	JTB4005	**163756440**	-	-	82712R
Typhoon 2T Euro3 Ch	50	2011	2011	JTB4005	**163756440**	-	-	82712R
Vespa Et2	50	1997	1998	JTB4007	**163756450**	-	-	431190
Vespa Et2 Iniezione	50	1997	2000	JTB4001	**163756400**	-	-	82645R
Vespa Et4	50	2000	2005	JTB4001	**163756400**	-	-	82645R
Vespa Lx 2T	50	2005	2013	JTB4001	**163756400**	-	-	82645R
Vespa Lx 2T Touring & 30Km	50	2010	2013	JTB4001	**163756400**	-	-	82645R
Vespa Lx 4T	50	2005	2009	JTB4001	**163756400**	-	-	82645R
Vespa Lx 4T-4V	50	2009	2013	JTB4001	**163756400**	-	-	82645R
Vespa Lx 4T-4V Touring	50	2010	2013	JTB4001	**163756400**	-	-	82645R
Vespa Lxv 2T	50	2006	2009	JTB4001	**163756400**	-	-	82645R
Vespa Lxv 2T Navy	50	2008	2008	JTB4001	**163756400**	-	-	82645R
Vespa Primavera 2T	50	2013	2017	JTB4003	**163756420**	-	-	436864
Vespa S 2T & College	50	2007	2012	JTB4001	**163756400**	-	-	82645R
Vespa S 4T-4V & College	50	2008	2012	JTB4001	**163756400**	-	-	82645R
Vespa Sprint 2T Noabs E2	50	2014	2017	JTB4003	**163756420**	-	-	436864
Zip	50	1995	1996	JTB4007	**163756450**	-	-	431190
Zip	50	2000	2004	JTB4001	**163756400**	-	-	82645R
Zip 2T	50	2008	2013	JTB4001	**163756400**	-	-	82645R
Zip 4T	50	2000	2013	JTB4001	**163756400**	-	-	82645R
Zip 4T 25Km/h	50	2006	2016	JTB4001	**163756400**	-	-	82645R
Zip Bimodale	50	1994	1997	JTB4007	**163756450**	-	-	431190
Zip Fast Raider	50	1993	1994	JTB4007	**163756450**	-	-	431190
Zip Fast Raider Rst	50	1996	1997	JTB4007	**163756450**	-	-	431190
Zip Rst	50	1996	1999	JTB4007	**163756450**	-	-	431190
Zip Sp	50	1996	2000	JTB4007	**163756450**	-	-	431190
Zip Sp	50	2001	2004	JTB4001	**163756400**	-	-	82645R
Zip Sp Euro2	50	2006	2013	JTB4001	**163756400**	-	-	82645R
Fly 4T	100	2006	2014	JTB4108	**163756470**	-	-	829484
Free	100	2002	2003	JTB4108	**163756470**	-	-	82619R

Modello *Model*	**CC**	**Da** *From*	**A** *To*	**Premium Quality Codice JT** *JT Code*	**Premium Quality Codice RMS** *RMS Code*	**Performance Quality Codice JT** *JT Code*	**Performance Quality Codice RMS** *RMS Code*	**OEM**
Zip 4T	100	2006	2010	JTB4001	**163756400**	-	**-**	82645R
Beverly	125	2001	2003	JTB4210	**163756540**	JTB4210KR	**163756542**	842009
Beverly Euro 3	125	2007	2008	JTB4210	**163756540**	JTB4210KR	**163756542**	842009
Beverly Euro 3 Mic	125	2007	2007	JTB4210	**163756540**	JTB4210KR	**163756542**	842009
Beverly Euro 3 Sport	125	2007	2008	JTB4210	**163756540**	JTB4210KR	**163756542**	842009
Beverly Rst	125	2004	2005	JTB4210	**163756540**	JTB4210KR	**163756542**	842009
Beverly Rst	125	2005	2007	JTB4210	**163756540**	JTB4210KR	**163756542**	842009
Beverly Rst 4T 4V Ie Euro3	125	2010	2015	JTB4210	**163756540**	JTB4210KR	**163756542**	842009
Beverly Tourer Euro3	125	2007	2010	JTB4210	**163756540**	JTB4210KR	**163756542**	842009
Carnaby	125	2007	2010	JTB4210	**163756540**	JTB4210KR	**163756542**	842009
Fly	125	2005	2007	JTB4206	**163756530**	JTB4206KR	**163756532**	841213
Fly 4T 3V Ie E3 Dt	125	2013	2015	JTB4206	**163756530**	JTB4206KR	**163756532**	841213
Fly 4T 3V Ie Euro3 Lem	125	2012	2013	JTB4206	**163756530**	JTB4206KR	**163756532**	841213
Fly Euro3	125	2007	2011	JTB4206	**163756530**	JTB4206KR	**163756532**	841213
Hexagon Gtx	125	2000	2000	JTB4206	**163756530**	JTB4206KR	**163756532**	841213
Hexagon Lx4	125	1998	1999	JTB4204	**163756510**	-	**-**	825059
Hexagon Lx-Lxt	125	1998	1999	JTB4307	**163756560**	-	**-**	484497
Liberty	125	1998	2000	JTB4204	**163756510**	-	**-**	825059
Liberty	125	2001	2002	JTB4206	**163756530**	JTB4206KR	**163756532**	841213
Liberty 4T	125	2006	2007	JTB4206	**163756530**	JTB4206KR	**163756532**	841213
Liberty 4T 2V Euro3	125	2009	2012	JTB4206	**163756530**	JTB4206KR	**163756532**	841213
Liberty 4T 2V Ie Ptt - Ita	125	2012	2013	JTB4206	**163756530**	JTB4206KR	**163756532**	82973R
Liberty 4T Euro3	125	2006	2008	JTB4206	**163756530**	JTB4206KR	**163756532**	841213
Liberty 4T Euro3 Delivery - Single	125	2007	2015	JTB4206	**163756530**	JTB4206KR	**163756532**	841213
Liberty 4T Euro3 Delivery - Tnt - Nexive	125	2008	2015	JTB4206	**163756530**	JTB4206KR	**163756532**	841213
Liberty 4T Sport Euro3	125	2006	2008	JTB4206	**163756530**	JTB4206KR	**163756532**	841213
Liberty Rst	125	2004	2005	JTB4206	**163756530**	JTB4206KR	**163756532**	841213
Liberty Rst Ptt	125	2005	2011	JTB4206	**163756530**	JTB4206KR	**163756532**	841213
Liberty Sport	125	2006	2006	JTB4206	**163756530**	JTB4206KR	**163756532**	841213
Mp3	125	2006	2008	JTB4206	**163756530**	JTB4206KR	**163756532**	841213
Mp3 Ibrido	125	2009	2010	JTB4206	**163756530**	JTB4206KR	**163756532**	841213
Mp3 Ie	125	2008	2009	JTB4206	**163756530**	JTB4206KR	**163756532**	841213
Mp3 Ie Touring	125	2011	2012	JTB4206	**163756530**	JTB4206KR	**163756532**	841213
Mp3 Yourban Erl	125	2011	2013	JTB4206	**163756530**	JTB4206KR	**163756532**	841213
Sfera	125	1995	1997	JTB4205	**163756520**	-	**-**	478547
Skipper	125	1994	1997	-	**-**	JTB3201KR	**163756282**	434812
Skipper 4T	125	2000	2002	JTB4206	**163756530**	JTB4206KR	**163756532**	841213
Skipper Lx	125	1998	1999	-	**-**	JTB3201KR	**163756282**	434812
Super Hexagon Gtx 12	125	2001	2002	JTB4206	**163756530**	JTB4206KR	**163756532**	841213
Typhoon 4T 2V Euro3	125	2010	2011	JTB4206	**163756530**	JTB4206KR	**163756532**	841213
Vespa 946 4T 3V Abs - 946 Red Emea, Apac	125	2013	2017	JTB4206	**163756530**	JTB4206KR	**163756532**	841213
Vespa 946 4T 3V Abs Armani	125	2015	2015	JTB4206	**163756530**	JTB4206KR	**163756532**	841213
Vespa Et4	125	1996	1998	JTB4205	**163756520**	-	**-**	478547
Vespa Et4	125	1999	2002	JTB4206	**163756530**	JTB4206KR	**163756532**	841213
Vespa Granturismo	125	2003	2007	JTB4206	**163756530**	JTB4206KR	**163756532**	841213
Vespa Granturismo Euro 3	125	2006	2007	JTB4206	**163756530**	JTB4206KR	**163756532**	841213
Vespa Gts 4T Ie Super	125	2009	2016	JTB4206	**163756530**	JTB4206KR	**163756532**	841213
Vespa Gts Euro3	125	2007	2012	JTB4206	**163756530**	JTB4206KR	**163756532**	841213
Vespa Gtv	125	2006	2008	JTB4206	**163756530**	JTB4206KR	**163756532**	841213
Vespa Gtv 4T Navy Euro3	125	2008	2008	JTB4206	**163756530**	JTB4206KR	**163756532**	841213
Vespa Lx	125	2005	2006	JTB4206	**163756530**	JTB4206KR	**163756532**	841213
Vespa Lx 4T 3V Ie - Touring	125	2012	2013	JTB4206	**163756530**	JTB4206KR	**163756532**	841213
Vespa Lx 4T Euro3 Touring	125	2010	2011	JTB4206	**163756530**	JTB4206KR	**163756532**	841213
Vespa Lx 4T Fl	125	2009	2009	JTB4206	**163756530**	JTB4206KR	**163756532**	841213
Vespa Lx Euro 3	125	2006	2008	JTB4206	**163756530**	JTB4206KR	**163756532**	841213
Vespa Lx Euro 3 Ie	125	2009	2011	JTB4206	**163756530**	JTB4206KR	**163756532**	841213
Vespa Lxv 4T Euro3	125	2006	2009	JTB4206	**163756530**	JTB4206KR	**163756532**	841213
Vespa Lxv 4T Navy Euro3	125	2007	2008	JTB4206	**163756530**	JTB4206KR	**163756532**	841213

Modello *Model*	CC	Da *From*	A *To*	Premium Quality Codice JT *JT Code*	Premium Quality Codice RMS *RMS Code*	Performance Quality Codice JT *JT Code*	Performance Quality Codice RMS *RMS Code*	OEM
Vespa Lxv Ie 4T	125	2010	2013	JTB4206	**163756530**	JTB4206KR	**163756532**	841213
Vespa S 4T 3V Ie	125	2012	2012	JTB4206	**163756530**	JTB4206KR	**163756532**	841213
Vespa S 4T Euro 3	125	2007	2008	JTB4206	**163756530**	JTB4206KR	**163756532**	841213
Vespa S 4T Ie & College	125	2009	2011	JTB4206	**163756530**	JTB4206KR	**163756532**	841213
X Evo	125	2007	2016	JTB4206	**163756530**	JTB4206KR	**163756532**	841213
X10 4T 4V Ie Euro3	125	2012	2015	JTB4210	**163756540**	JTB4210KR	**163756542**	842009
X7 Euro 3	125	2008	2008	JTB4206	**163756530**	JTB4206KR	**163756532**	841213
X7 Evo Ie Euro 3	125	2009	2010	JTB4206	**163756530**	JTB4206KR	**163756532**	841213
X8	125	2004	2006	JTB4206	**163756530**	JTB4206KR	**163756532**	841213
X8 Premium Euro 2	125	2006	2006	JTB4206	**163756530**	JTB4206KR	**163756532**	841213
X8 Premium Euro 3	125	2006	2007	JTB4206	**163756530**	JTB4206KR	**163756532**	841213
X8 Street Euro 2	125	2006	2007	JTB4206	**163756530**	JTB4206KR	**163756532**	841213
X9	125	2001	2002	JTB4206	**163756530**	JTB4206KR	**163756532**	841213
X9 Evolution	125	2003	2003	JTB4206	**163756530**	JTB4206KR	**163756532**	841213
X9 Evolution	125	2005	2006	JTB4206	**163756530**	JTB4206KR	**163756532**	841213
X9 Evolution Euro3	125	2007	2007	JTB4206	**163756530**	JTB4206KR	**163756532**	841213
Zip	125	2000	2002	JTB4206	**163756530**	JTB4206KR	**163756532**	841213
Fly	150	2005	2007	JTB4206	**163756530**	JTB4206KR	**163756532**	841213
Fly Euro3	150	2008	2011	JTB4206	**163756530**	JTB4206KR	**163756532**	841213
Hexagon	150	1994	1997	-	-	JTB3201KR	**163756282**	434812
Liberty 4T 3V Lem	150	2013	2014	JTB4206	**163756530**	JTB4206KR	**163756532**	841213
Liberty 4T Euro3	150	2008	2008	JTB4206	**163756530**	JTB4206KR	**163756532**	841213
Liberty 4T Sport Euro3	150	2008	2008	JTB4206	**163756530**	JTB4206KR	**163756532**	841213
Liberty Iget 4T 3V Ie	150	2015	2016	JTB4206	**163756530**	JTB4206KR	**163756532**	841213
Liberty Moc 4T Euro3	150	2009	2013	JTB4206	**163756530**	JTB4206KR	**163756532**	841213
Vespa Gts Super Ie 4T 3V Au,Ex,Jp,Ri,T,V	150	2014	2015	JTB4206	**163756530**	JTB4206KR	**163756532**	841213
Vespa Lt 4T 3V Ie	150	2014	2014	JTB4206	**163756530**	JTB4206KR	**163756532**	841213
Vespa Lx	150	2005	2006	JTB4206	**163756530**	JTB4206KR	**163756532**	841213
Vespa Lx 4T FI	150	2009	2009	JTB4206	**163756530**	JTB4206KR	**163756532**	841213
Vespa Lx Euro 3	150	2006	2008	JTB4206	**163756530**	JTB4206KR	**163756532**	841213
Vespa Lx Euro 3 Ie	150	2009	2011	JTB4206	**163756530**	JTB4206KR	**163756532**	841213
Vespa S 4T	150	2008	2009	JTB4206	**163756530**	JTB4206KR	**163756532**	841213
Vespa S 4T Ie & College	150	2009	2012	JTB4206	**163756530**	JTB4206KR	**163756532**	841213
X8 Street Euro 2	150	2006	2008	JTB4206	**163756530**	JTB4206KR	**163756532**	841213
Hexagon Gtx	180	2000	2000	-	-	JTB4301KR	**163756552**	840908
Super Hexagon Gtx 12	180	2001	2002	-	-	JTB4301KR	**163756552**	840908
X9 Amalfi	180	2000	2003	-	-	JTB4301KR	**163756552**	833578
Liberty	200	2006	2006	-	-	JTB4301KR	**163756552**	840908
Liberty 4T Euro3	200	2006	2008	-	-	JTB4301KR	**163756552**	840908
Liberty 4T Sport Euro3	200	2006	2007	-	-	JTB4301KR	**163756552**	840908
Liberty Rst	200	2004	2004	-	-	JTB4301KR	**163756552**	840908
Liberty Sport	200	2006	2006	-	-	JTB4301KR	**163756552**	840908
Vespa Granturismo	200	2003	2007	-	-	JTB4301KR	**163756552**	840908
X8	200	2004	2007	-	-	JTB4301KR	**163756552**	840908
X9	200	2002	2003	-	-	JTB4301KR	**163756552**	833578
X9 Evolution	200	2003	2003	-	-	JTB4301KR	**163756552**	833578
Beverly	250	2005	2007	-	-	JTB4402KR	**163756582**	841851
Beverly Cruiser	250	2007	2009	-	-	JTB4402KR	**163756582**	841851
Beverly Euro 3 Mic	250	2007	2007	-	-	JTB4402KR	**163756582**	841851
Beverly Ie Euro 3	250	2006	2008	-	-	JTB4402KR	**163756582**	841851
Beverly Rst	250	2004	2005	-	-	JTB4402KR	**163756582**	841851
Beverly Sport	250	2006	2008	-	-	JTB4402KR	**163756582**	841851
Beverly Tourer Euro3	250	2007	2009	-	-	JTB4402KR	**163756582**	841851
Carnaby	250	2008	2009	-	-	JTB4402KR	**163756582**	841851
Hexagon Gt-Gtx	250	1998	2000	-	-	JTB1401KR	**163756142**	495158
Mp3	250	2006	2008	-	-	JTB4403KR	**163756592**	82941R
Mp3 Lt	250	2008	2009	-	-	JTB4403KR	**163756592**	82941R
Mp3 Mic	250	2008	2009	-	-	JTB4403KR	**163756592**	82941R

Modello *Model*	**CC**	**Da** *From*	**A** *To*	**Premium Quality Codice JT** *JT Code*	**Premium Quality Codice RMS** *RMS Code*	**Performance Quality Codice JT** *JT Code*	**Performance Quality Codice RMS** *RMS Code*	**OEM**
Vespa Gt 60 Euro 3	250	2006	2007	-	-	JTB4403KR	**163756592**	82941R
Vespa Gts	250	2005	2014	-	-	JTB4403KR	**163756592**	82941R
Vespa Gts Abs	250	2005	2012	-	-	JTB4403KR	**163756592**	843963
Vespa Gtv	250	2006	2009	-	-	JTB4403KR	**163756592**	82941R
Vespa Gtv 4T Navy Euro3	250	2007	2007	-	-	JTB4403KR	**163756592**	82941R
X Evo	250	2007	2013	-	-	JTB4403KR	**163756592**	843963
X7 Euro 3	250	2008	2008	-	-	JTB4403KR	**163756592**	82941R
X8 Euro3	250	2005	2008	-	-	JTB4403KR	**163756592**	843963
X9	250	2000	2001	JTB1402	**163756150**	-	-	496304
X9 Evolution	250	2004	2004	-	-	JTB4403KR	**163756592**	843963
X9 Evolution	250	2006	2006	-	-	JTB4403KR	**163756592**	843963
Beverly Ie Abs E4 (Emea)	300	2016	2018	-	-	JTB4402KR	**163756582**	B013360
Beverly Rst 4T 4V Ie Euro3	300	2010	2015	-	-	JTB4402KR	**163756582**	B013360
Beverly Tourer Euro3	300	2009	2010	-	-	JTB4402KR	**163756582**	841851
Carnaby Cruiser	300	2009	2012	-	-	JTB4402KR	**163756582**	B013360
Mp3 300 Ie Lt	300	2010	2011	-	-	JTB4403KR	**163756592**	82941R
Mp3 300 Ie Mic	300	2010	2011	-	-	JTB4403KR	**163756592**	82941R
Mp3 300 Lt Business - Sport Abs - Enjoy	300	2014	2016	-	-	JTB4403KR	**163756592**	82941R
Mp3 4T 4V Ie Erl Ibrido	300	2010	2013	-	-	JTB4403KR	**163756592**	82941R
Mp3 4T 4V Ie Lt Ibrido	300	2010	2011	-	-	JTB4403KR	**163756592**	82941R
Mp3 Ie E4 Lt Business - Sport Abs	300	2016	2018	-	-	JTB4403KR	**163756592**	82941R
Mp3 Ie Lt- Ie Lt Sport	300	2011	2014	-	-	JTB4403KR	**163756592**	82941R
Mp3 Ie Lt Touring	300	2011	2013	-	-	JTB4403KR	**163756592**	82941R
Mp3 Ie Touring	300	2011	2012	-	-	JTB4403KR	**163756592**	82941R
Mp3 Yourban Erl	300	2011	2015	-	-	JTB4403KR	**163756592**	82941R
Mp3 Yourban Lt Erl	300	2011	2016	-	-	JTB4403KR	**163756592**	82941R
Mp3 Yourban Lt Rl E4	300	2017	2018	-	-	JTB4403KR	**163756592**	82941R
Vespa Gts - Gts Super Ie Abs E4 (Emea)	300	2016	2018	-	-	JTB4403KR	**163756592**	82941R
Vespa Gts Ie & Touring	300	2012	2016	-	-	JTB4403KR	**163756592**	82941R
Vespa Gts Ie Abs E4 (Emea)	300	2016	2017	-	-	JTB4403KR	**163756592**	82941R
Vespa Gts Ie Touring	300	2011	2012	-	-	JTB4403KR	**163756592**	82941R
Vespa Gts Super	300	2008	2016	-	-	JTB4403KR	**163756592**	82941R
Vespa Gts Super Sport	300	2010	2013	-	-	JTB4403KR	**163756592**	82941R
Vespa Gtv 4T 4V Ie	300	2010	2013	-	-	JTB4403KR	**163756592**	82941R
Vespa Gtv Sei Giorni Ie E4 Abs (Emea)	300	2017	2017	-	-	JTB4403KR	**163756592**	82941R
Vespa Gtv Via Montenapoleone	300	2010	2010	-	-	JTB4403KR	**163756592**	82941R
X7 Evo Ie Euro 3	300	2009	2010	-	-	JTB4403KR	**163756592**	82941R
Beverly 4T 4V Ie Euro3 Sport Touring	350	2011	2014	-	-	JTB4501KR	**163756602**	83025R
Beverly 4T St Ie Abs	350	2016	2018	-	-	JTB4501KR	**163756602**	83025R
X10 4T 4V Ie Euro3	350	2012	2015	-	-	JTB4501KR	**163756602**	83025R
Beverly Euro 3	400	2006	2007	-	-	JTB4601KR	**163756612**	832738
Beverly Tourer Euro3	400	2008	2010	-	-	JTB4601KR	**163756612**	832738
Mp3	400	2007	2008	-	-	JTB4601KR	**163756612**	832738
Mp3 Ie Lt - Mp3 Ie Lt Sport	400	2008	2010	-	-	JTB4601KR	**163756612**	832738
Mp3 Ie Lt Touring	400	2011	2011	-	-	JTB4601KR	**163756612**	832738
Mp3 Mic	400	2008	2010	-	-	JTB4601KR	**163756612**	832738
Mp3 Rl Touring	400	2011	2011	-	-	JTB4601KR	**163756612**	832738
X Evo	400	2007	2011	-	-	JTB4601KR	**163756612**	832738
X8 Euro3	400	2006	2008	-	-	JTB4601KR	**163756612**	832738
Beverly	500	2002	2006	-	-	JTB4601KR	**163756612**	832738
Beverly Cruiser	500	2007	2012	-	-	JTB4603KR	**163756632**	849090
Beverly Euro 3	500	2006	2008	-	-	JTB4601KR	**163756612**	832738
Mp3 Lt Business Abs	500	2014	2016	-	-	JTB4603KR	**163756632**	849090
Mp3 Lt E4 Sport - Business	500	2016	2018	-	-	JTB4603KR	**163756632**	849090
Mp3 Lt Sport - Business	500	2011	2013	-	-	JTB4603KR	**163756632**	849090
Mp3 Rl Sport - Business	500	2011	2012	-	-	JTB4603KR	**163756632**	849090
Mp3 Sport Abs	500	2014	2016	-	-	JTB4603KR	**163756632**	849090
X10 4T 4V Ie Euro3	500	2012	2014	-	-	JTB4603KR	**163756632**	849090

Modello *Model*	CC	Da *From*	A *To*	Premium Quality Codice JT *JT Code*	Premium Quality Codice RMS *RMS Code*	Performance Quality Codice JT *JT Code*	Performance Quality Codice RMS *RMS Code*	OEM
X9	500	2001	2002	-	-	JTB4602KR	**163756622**	827826
X9 Evolution	500	2003	2007	-	-	JTB4601KR	**163756612**	832738
X9 Evolution Abs	500	2006	2007	-	-	JTB4601KR	**163756612**	832738
QINGQI								
Qm50Qt-2 50 4T	50	2007	2009	JTB5002	**163756650**	-	-	-
Qm50Qt-2 50 4T Fizz	50	2010	2012	JTB5002	**163756650**	-	-	-
Qm50Qt-2 50 4T Fizz	50	2014	2017	JTB5002	**163756650**	-	-	-
Qm50Qt-2G 50 4T Leopard	50	2012	2014	JTB5002	**163756650**	-	-	-
Qm50Qt-2M 50 4T	50	2008	2010	JTB5002	**163756650**	-	-	-
Qm50Qt-6A(A) 50 4T	50	2006	2008	JTB5003	**163756660**	-	-	759223
Qm50Qt-6A(H) 50 4T V-Clic	50	2006	2011	JTB5003	**163756660**	-	-	759223
Qm50Qt-6D 50 Dt 4T Koala	50	2010	2012	JTB5003	**163756660**	-	-	759223
Qm50Qt-6D 50 Dt 4T Koala	50	2014	2014	JTB5003	**163756660**	-	-	759223
Qm50Qt-6D 50 Tt 4T Koala	50	2008	2009	JTB5003	**163756660**	-	-	759223
Qm50Qt-6F 50 4T	50	2012	2012	JTB5003	**163756660**	-	-	759223
Qm50Qt-6F 50 4T	50	2014	2016	JTB5003	**163756660**	-	-	759223
Qm50T-10A(A) 50 4T	50	2007	2014	JTB5002	**163756650**	-	-	-
Qm50T-10A(E) 50 4T	50	2009	2009	JTB5002	**163756650**	-	-	-
REX								
Bergamo 50 4T	50	2012	2017	JTB5002	**163756650**	-	-	-
Boston 8 50 4T	50	2011	2017	JTB5003	**163756660**	-	-	759223
Capriolo 50 4T	50	2007	2009	JTB5002	**163756650**	-	-	-
Imola 50 4T	50	2011	2017	JTB5002	**163756650**	-	-	-
Milano 50 4T	50	2011	2017	JTB5002	**163756650**	-	-	-
Monza 50 4T Race	50	2011	2017	JTB5003	**163756660**	-	-	759223
Off Limit 50 4T	50	2007	2009	JTB5003	**163756660**	-	-	759223
Palermo 50 4T	50	2012	2017	JTB5003	**163756660**	-	-	759223
Rs 50 4T Classic	50	2009	2017	JTB5003	**163756660**	-	-	759223
Tribal Scooter 50 4T	50	2007	2009	JTB5003	**163756660**	-	-	759223
Rs 400 50 4T	400	2009	2017	JTB5003	**163756660**	-	-	759223
Rs 450 50 4T	450	2006	2017	JTB5003	**163756660**	-	-	759223
Rs 460 50 4T	460	2009	2017	JTB5003	**163756660**	-	-	759223
Rs 500 50 4T	500	2006	2017	JTB5003	**163756660**	-	-	759223
Rs 600 50 4T	600	2008	2017	JTB5002	**163756650**	-	-	-
Rs 700 50 4T	700	2008	2017	JTB5002	**163756650**	-	-	-
Rs 750 50 4T	750	2009	2017	JTB5002	**163756650**	-	-	-
Rs 900 50 4T	900	2007	2017	JTB5002	**163756650**	-	-	-
RIEJU								
Paseo 50 4T	50	2007	2008	JTB5003	**163756660**	-	-	759223
Toreo 50 4T	50	2007	2008	JTB5002	**163756650**	-	-	-
SACHS								
Limbo 25 Ma	25	1996	1997	JTB1004	**163756030**	-	-	-
Limbo 25 Sa	25	1998	2000	JTB1004	**163756030**	-	-	-
49Er 50 4T 10´ Rad	50	2005	2006	JTB5003	**163756660**	-	-	759223
49Er 50 4T 12´ Rad	50	2007	2009	JTB5002	**163756650**	-	-	-
Bee 50 4T	50	2007	2010	JTB5003	**163756660**	-	-	759223
Sr 50 Samba	50	1996	1997	JTB1004	**163756030**	-	-	-
SCOMADI								
Tl 50	50	2015	2017	JTB5002	**163756650**	-	-	-
SUZUKI								
Ap50 R-T (R7)	50	1994	1997	JTB2001	**163756190**	-	-	27601-10E00-000
Ay Ayw K1-K4	50	2001	2002	JTB2003	**163756210**	-	-	27601-06F01-000
Ay Ayw K1-K4	50	2003	2004	JTB2001	**163756190**	-	-	27601-10E00-000
Ay Ayw Katana V-Y	50	1997	2000	JTB2003	**163756210**	-	-	27601-06F01-000
Cp	50	1991	1994	JTB2002	**163756200**	-	-	27601-03A02-000
Tr S Street Magic	50	1998	1998	JTB2003	**163756210**	-	-	27601-06F01-000
Uf Estilete	50	2000	2000	JTB2003	**163756210**	-	-	27601-06F01-D00
Ux Zillion	50	1999	1999	JTB2003	**163756210**	-	-	27601-06F01-000

Modello *Model*	CC	Da *From*	A *To*	Premium Quality Codice JT *JT Code*	Premium Quality Codice RMS *RMS Code*	Performance Quality Codice JT *JT Code*	Performance Quality Codice RMS *RMS Code*	OEM
An125 S-Y	125	1995	2000	JTB2201	**163756220**	-	-	27601-20E01-000
Uc Epicuro X-K1	125	1999	2001	JTB2402	**163756240**	-	-	27601-21F11-000
Uh125 Burgman K2-K6	125	2002	2006	JTB2402	**163756240**	-	-	27601-21F11-000
Uc Epicuro X-K1	150	1999	2001	JTB2402	**163756240**	-	-	27601-21F00-000
Uh150 Burgman K2-K6	150	2002	2006	JTB2402	**163756240**	-	-	27601-21F11-000
An250 Burgman W-K2	250	1998	2002	-	-	JTB2401KR	**163756232**	27601-14F01-000
An400 Burgman K3-K6	400	2003	2006	-	-	JTB2502KR	**163756262**	27601-15F10-000
An400 Burgman K7-L0	400	2007	2010	-	-	JTB2503KR	**163756272**	27601-05H00-000
An400 Burgman L1	400	2011	2011	-	-	JTB2503KR	**163756272**	27601-05H00-000
An400 Burgman L2	400	2012	2012	-	-	JTB2503KR	**163756272**	27601-05H00-000
An400 Burgman L3	400	2013	2013	-	-	JTB2503KR	**163756272**	27601-05H00-000
An400 Burgman L4	400	2014	2014	-	-	JTB2503KR	**163756272**	27601-05H00-000
An400 Burgman L5	400	2015	2015	-	-	JTB2503KR	**163756272**	27601-05H00-000
An400 Burgman L6	400	2016	2016	-	-	JTB2503KR	**163756272**	27601-05H00-000
An400 Burgman L8	400	2018	2018	-	-	JTB2503KR	**163756272**	27601-05H10-000
An400 Burgman X-K2	400	1999	2002	-	-	JTB2501KR	**163756252**	27601-15F03-000
SYM								
Cinderella	50	1999	2002	JTB5003	**163756660**	-	-	1B01GAK01
Dd	50	2002	2002	JTB7001	**163756770**	-	-	1B01GW001
Dd Eu2	50	2003	2007	JTB7001	**163756770**	-	-	1B01M7Q01
Fiddle Ii	50	2008	2008	JTB7003	**163756790**	-	-	1B01BE201
Jet	50	1999	2001	JTB7002	**163756780**	-	-	1B01T5201
Jet Euro X Eu2	50	2003	2007	JTB7002	**163756780**	-	-	1B01T5201
Jet Sport X	50	2007	2011	JTB7002	**163756780**	-	-	1B01T5201
Jet4 R 2T	50	2011	2014	JTB7002	**163756780**	-	-	1B01T5201
Jungle	50	2000	2000	JTB7002	**163756780**	-	-	1B01T5201
Mask	50	2000	2001	JTB7002	**163756780**	-	-	1B01T5201
Mask Eu2	50	2003	2004	JTB7002	**163756780**	-	-	1B01T5201
Red Devil	50	1999	1999	JTB7002	**163756780**	-	-	1B01T5201
Super Fancy	50	1998	2000	JTB5003	**163756660**	-	-	1B01GAK01
Symply	50	2007	2008	JTB7003	**163756790**	-	-	1B01BE201
Gts 125	125	2006	2007	JTB7205	**163756800**	-	-	1B01HNA01
Gts Joymax	125	2006	2007	JTB7205	**163756800**	-	-	1B01HNA01
Joyride Euro2	125	2005	2006	JTB7205	**163756800**	-	-	1B01HNA01
Joyride Euro3	125	2007	2007	JTB7205	**163756800**	-	-	1B01HNA01
Joyride Evo	125	2009	2010	JTB7205	**163756800**	-	-	1B01HNA01
Joyride Evo	125	2010	2010	JTB7205	**163756800**	-	-	1B01HNA01
Joyride Evo	125	2013	2014	JTB7205	**163756800**	-	-	1B01HNA01
New Duke	125	2000	2001	-	-	JTB5301KR	**163756692**	1B01GY601
Super Duke	125	1999	2002	-	-	JTB5301KR	**163756692**	1B01GY601
Hd Eu2	200	2003	2004	JTB7207	**163756810**	-	-	1B01HHA01
Hd Euro3 I	200	2007	2007	JTB7207	**163756810**	-	-	1B01HHA01
Hd Evo Euro2	200	2005	2006	JTB7207	**163756810**	-	-	1B01HHA01
Hd Evo Euro3 I	200	2007	2007	JTB7207	**163756810**	-	-	1B01HHA01
Hd Evo I Euro3	200	2010	2012	JTB7207	**163756810**	-	-	1B01HHA01
Hd Evo I Tamburo Euro3	200	2008	2009	JTB7207	**163756810**	-	-	1B01HHA01
Hd2 I	200	2011	2011	JTB7207	**163756810**	-	-	1B01HHA01
Hd2 I	200	2014	2014	JTB7207	**163756810**	-	-	1B01HHA01
Joyride Evo I	200	2009	2009	JTB7302	**163756820**	-	-	1B01HLK01
Joyride Evo I	200	2013	2014	JTB7302	**163756820**	-	-	1B01HLK01
Joyride I Euro3	200	2007	2009	JTB7302	**163756820**	-	-	1B01HLK01
Joyride I Evo	200	2010	2010	JTB7302	**163756820**	-	-	1B01HLK01
Gts	250	2007	2008	-	-	JTB7401KR	**163756832**	1B01HMA01
Gts 250	250	2006	2007	-	-	JTB7401KR	**163756832**	1B01HMA01
Joymax	250	2005	2007	-	-	JTB7401KR	**163756832**	1B01HMA01
Joymax Euro3 I	250	2007	2008	-	-	JTB7401KR	**163756832**	1B01HMA01
Citycom	300	2008	2009	-	-	JTB7403KR	**163756852**	1B01LEA01
Citycom Efi	300	2010	2011	-	-	JTB7403KR	**163756852**	1B01LEA01

Modello *Model*	CC	Da *From*	A *To*	Premium Quality Codice JT *JT Code*	Premium Quality Codice RMS *RMS Code*	Performance Quality Codice JT *JT Code*	Performance Quality Codice RMS *RMS Code*	OEM
Citycom I Cbs	300	2012	2012	-	-	JTB7403KR	**163756852**	1B01LEA01
Cruisym 300 Euro4	300	2017	2017	-	-	JTB7501KR	**163756862**	1B01L3A01
Joymax Evo	300	2009	2009	-	-	JTB7402KR	**163756842**	1B01HWA01
Joymax Evo I	300	2010	2010	-	-	JTB7402KR	**163756842**	1B01HWA01
Joymax I	300	2012	2012	-	-	JTB7501KR	**163756862**	1B01L3A01
Joymax I	300	2014	2014	-	-	JTB7501KR	**163756862**	1B01L3A01
Joymax I Abs	300	2013	2014	-	-	JTB7501KR	**163756862**	1B01L3A01
Joymax I Sport Abs-S&S Euro4	300	2017	2017	-	-	JTB7501KR	**163756862**	1B01L3A01
TAURIS								
Brio 50 4T	50	2009	2011	JTB5003	**163756660**	-	-	759223
Brisa 50 4T	50	2011	2014	JTB5003	**163756660**	-	-	759223
Capri 50 4T	50	2010	2013	JTB5002	**163756650**	-	-	-
Corona 50 4T	50	2011	2015	JTB5003	**163756660**	-	-	759223
Cubana 50 4T	50	2010	2016	JTB5002	**163756650**	-	-	-
TGB								
101 R 50	101	2008	2010	JTB8202	**163756910**	-	-	490100
YAMAHA								
Bw'S	50	2004	2016	JTB4004	**163756430**	-	-	5RNE76411000
Bw'S Bump	50	1997	1998	JTB4004	**163756430**	-	-	5RNE76411000
Bw'S Easy	50	2013	2013	JTB4004	**163756430**	-	-	5RNE76411000
Bw'S Naked	50	2003	2003	JTB4004	**163756430**	-	-	5RNE76410000
Bw'S Naked	50	2004	2004	JTB4004	**163756430**	-	-	5RNE76411000
Bw'S Naked	50	2009	2016	JTB4004	**163756430**	-	-	5RNE76411000
Bw'S Next Generation	50	1997	2006	JTB4004	**163756430**	-	-	5RNE76411000
Bw'S Original	50	1997	1998	JTB4004	**163756430**	-	-	5RNE76411000
Bw'S Original	50	2001	2002	JTB4004	**163756430**	-	-	5RNE76411000
Bw'S Original Euro2	50	2003	2003	JTB4004	**163756430**	-	-	5RNE76410000
Cr Z	50	1991	1995	JTB8005	**163756890**	-	-	3WF176410000
Cs Jog R	50	2002	2002	JTB4004	**163756430**	-	-	5RNE76410000
Cs Jog R	50	2006	2015	JTB4004	**163756430**	-	-	5RNE76411000
Cs Jog R Euro2	50	2002	2005	JTB4004	**163756430**	-	-	5RNE76411000
Cw Bw'S Original Euro2	50	2002	2002	JTB4004	**163756430**	-	-	5RNE76410000
Cw L Bw'S	50	2003	2004	JTB4004	**163756430**	-	-	5RNE76410000
Cw Rs Spy	50	1995	1998	JTB4004	**163756430**	-	-	5RNE76411000
Cw Sp Bw'S Original Euro2	50	2002	2002	JTB4004	**163756430**	-	-	5RNE76410000
Ew Slider	50	2000	2002	JTB4004	**163756430**	-	-	5RNE76411000
Ns50 Aerox 2T	50	2013	2016	JTB4004	**163756430**	-	-	5RNE76411000
Ns50N Aerox Naked	50	2013	2016	JTB4004	**163756430**	-	-	5RNE76411000
Ya R Axis	50	1995	1996	JTB8005	**163756890**	-	-	3WF176410000
Yh Why	50	1998	1998	JTB4004	**163756430**	-	-	5RNE76410000
Yh Why	50	2001	2002	JTB4004	**163756430**	-	-	5RNE76411000
Yh Why	50	2006	2006	JTB4004	**163756430**	-	-	5RNE76410000
Yh Why Euro1	50	1999	2000	JTB4004	**163756430**	-	-	5RNE76411000
Yh Why Euro2	50	2003	2005	JTB4004	**163756430**	-	-	5RNE76411000
Ym Breeze	50	1994	1995	JTB8005	**163756890**	-	-	3WF176410000
Yn Neo'S 2T	50	2002	2012	JTB4004	**163756430**	-	-	5RNE76411000
Yn Neo'S 2T	50	2012	2016	JTB4004	**163756430**	-	-	5RNE76411000
Yn Neo'S Easy	50	2013	2013	JTB4004	**163756430**	-	-	5RNE76411000
Yn Neo'S Euro2	50	2002	2003	JTB4004	**163756430**	-	-	5RNE76411000
Yn R Neo'S 2T	50	1997	2001	JTB4004	**163756430**	-	-	5RNE76411000
Yn R Neo'S 2T	50	2002	2002	JTB4004	**163756430**	-	-	5RNE76410000
Yq Aerox	50	2001	2002	JTB4004	**163756430**	-	-	5RNE76411000
Yq Aerox	50	2004	2012	JTB4004	**163756430**	-	-	5RNE76411000
Yq Aerox R	50	1999	2000	JTB4004	**163756430**	-	-	5RNE76411000
Yq L Aerox Euro2	50	2003	2003	JTB4004	**163756430**	-	-	5RNE76411000
Bw'S	100	1999	2001	JTB4101	**163756460**	-	-	5FA176410000
Yn Neo'S	100	1999	2002	JTB4101	**163756460**	-	-	4VP176410000
Yq Aerox	100	2000	2002	JTB4101	**163756460**	-	-	5FA176410000

Modello *Model*	**CC**	**Da** *From*	**A** *To*	**Premium Quality Codice JT** *JT Code*	**Premium Quality Codice RMS** *RMS Code*	**Performance Quality Codice JT** *JT Code*	**Performance Quality Codice RMS** *RMS Code*	**OEM**
Nxc Cygnus X	125	2004	2011	JTB3202	**163756290**	-	-	5ML176410000
Vp X-City	125	2008	2011	-	-	JTB3203KR	**163756302**	1B9E76410000
Xc Cygnus R	125	1999	2003	JTB4203	**163756500**	-	-	4CW176410200
Xc K Cygnus R	125	1997	1998	JTB4203	**163756500**	-	-	4CW176410200
Xc T Cygnus	125	1995	1998	JTB4203	**163756500**	-	-	4CW176410200
Xn Teo'S	125	2000	2000	JTB4202	**163756490**	-	-	5DS176410000
Xq Maxster	125	2001	2002	JTB4202	**163756490**	-	-	5DS176410000
Yp125 Majesty	125	1998	2002	JTB4202	**163756490**	-	-	5DS176410000
Yp125R X-Max	125	2006	2016	-	-	JTB3203KR	**163756302**	1B9E76410000
Yp125R X-Max Abs	125	2011	2011	-	-	JTB3203KR	**163756302**	1B9E76410000
Yp125Ra X-Max Abs	125	2013	2018	-	-	JTB3203KR	**163756302**	1B9E76410000
Xn Teo'S	150	2001	2002	JTB4202	**163756490**	-	-	5DS176410000
Xq Maxster	150	2001	2002	JTB4202	**163756490**	-	-	5DS176410000
Yp150 Majesty	150	2000	2002	JTB4202	**163756490**	-	-	5DS176410000
Vp X-City	250	2007	2008	-	-	JTB3402KR	**163756322**	5SEE76410100
Vp X-City	250	2009	2015	-	-	JTB3402KR	**163756322**	5SEE76410200
Yp250 Majesty	250	1996	1998	-	-	JTB3401KR	**163756312**	5CG176410000
Yp250 Majesty	250	2000	2003	-	-	JTB3401KR	**163756312**	5CG176410000
Yp250 Majesty Abs	250	2003	2003	-	-	JTB3401KR	**163756312**	5CG176410000
Yp250 Majesty Dx	250	1998	1999	-	-	JTB3401KR	**163756312**	5CG176410000
Yp250R Black X-Max	250	2009	2009	-	-	JTB3402KR	**163756322**	5SEE76410200
Yp250R X-Max	250	2005	2016	-	-	JTB3402KR	**163756322**	5SEE76410200
Yp250R X-Max Sport	250	2011	2012	-	-	JTB3402KR	**163756322**	5SEE76410200
Yp250Ra X-Max Abs	250	2011	2012	-	-	JTB3402KR	**163756322**	5SEE76410200
Yp250Ra X-Max Abs	250	2012	2016	-	-	JTB3402KR	**163756322**	5SEE76410200
Xc Versity	300	2003	2006	-	-	JTB3402KR	**163756322**	5SEE76410000
Yp400 Majesty	400	2004	2006	-	-	JTB3501KR	**163756332**	5RU176410000
Yp400 Majesty	400	2007	2008	-	-	JTB3502KR	**163756342**	5RU176411000
Yp400 Majesty	400	2009	2011	-	-	JTB3503KR	**163756352**	34B176410000
Yp400 Majesty Abs	400	2007	2008	-	-	JTB3502KR	**163756342**	5RU176411000
Yp400 Majesty Abs	400	2009	2011	-	-	JTB3503KR	**163756352**	34B176410000
Yp400R X-Max	400	2013	2016	-	-	JTB3504KR	**163756362**	1SDE76410000
Yp400R X-Max Momodesign	400	2014	2014	-	-	JTB3504KR	**163756362**	1SDE76410000
Yp400Ra X-Max	400	2018	2018	-	-	JTB3504KR	**163756362**	1SDE76410000
Yp400Ra X-Max Abs	400	2014	2017	-	-	JTB3504KR	**163756362**	1SDE76410000
Yp400Ra X-Max Ironmax Abs	400	2016	2016	-	-	JTB3504KR	**163756362**	1SDE76410000
Yp400Ra X-Max Momodesign Abs	400	2014	2014	-	-	JTB3504KR	**163756362**	1SDE76410000
Xp T-Max	500	2001	2003	-	-	JTB3601KR	**163756372**	5GJ176410000
Xp T-Max	500	2004	2011	-	-	JTB3602KR	**163756382**	5VU176410000
Xp T-Max Abs	500	2005	2011	-	-	JTB3602KR	**163756382**	5VU176410000
Xp T-Max Abs Sv	500	2010	2011	-	-	JTB3602KR	**163756382**	5VU176410000
Xp T-Max Black Max	500	2006	2006	-	-	JTB3602KR	**163756382**	5VU176410000
Xp T-Max Black Max-Night Max	500	2007	2007	-	-	JTB3602KR	**163756382**	5VU176410000
Xp T-Max Sv	500	2011	2011	-	-	JTB3602KR	**163756382**	5VU176410000
Xp T-Max White Max	500	2010	2010	-	-	JTB3602KR	**163756382**	5VU176410000
Xp T-Max	530	2012	2016	-	-	JTB3603KR	**163756392**	59C176410000
Xp T-Max Abs	530	2012	2016	-	-	JTB3603KR	**163756392**	59C176410000
Xp T-Max Sp	530	2015	2015	-	-	JTB3603KR	**163756392**	59C176410000
Xp T-Max Sp Abs	530	2015	2016	-	-	JTB3603KR	**163756392**	59C176410000
ZONGSHEN								
Wind 25 4T	25	2005	2006	JTB5003	**163756660**	-	-	759223
Wind 50 4T	50	2005	2006	JTB5003	**163756660**	-	-	759223

SEMIPULEGGE MOTRICI FISSE - *FIXED DRIVE HALF PULLEY*
APRILIA

100320130

100320131

50: Mojito Custom 2T Motore Piaggio 04-10 • Scarabeo 2T Eu2 Motore Piaggio 10-12 • Scarabeo 2T Net 09-10 • Scarabeo 2T 14 • Scarabeo 4T 4V Net 09-10 • Scarabeo 4T 4V 10- 14 • Scarabeo 4T Restyling Eu3 06-09 • Scarabeo 4T 02-06 • Scarabeo Quattro 09 • Scarabeo Street 2T Restyling 06-09 • Scarabeo Street 05-06 • Sport City one 2T 08-11 • Sport City One 4T 08-10 • SR Iniezione e Carburatore 14 • SR motard 2T 12-14 • SR Motard 4T 4V 13-14 • SR R Factory ie e Carburatore 10-14 • SR R R Factory 04-09 • SR Street 03-12
100: Scarabeo 4T Net Eu3 10 • Scarabeo 4T Net 09 • Scarabeo 4T Restyling 06-09 • Scarabeo 4T 01-14
R.O. 479561



100320150

125: Atlantic Eu3 06-12 • Atlantic 03-05 • Mojito 03-08 • Scarabeo Motore Piaggio Eu3 06 • Scarabeo 03-06 • Sport City Cube 08-10 • Sport City Eu3 06-08 • Sport City One 4T Eu3 08-11 • Sport City Street 12 • Sport City 04-06 • SR Motard 12-14
R.O. AP8580085



100320160

125: Scarabeo ie Light 09-12 • Scarabeo Light 07-08
200: Scarabeo ie Light 09-12 • Scarabeo Light 07-08
R.O. 832720



100320310

100320311

200: Atlantic 03-05 • Scarabeo Motore Piaggio Eu3 06 • Scarabeo 03 • Sport City Eu3 06-08 • Sport City 04-06
R.O. AP8575027



100320270

250: Atlantic Eu3 06-08 • Atlantic 03-05 • Scarabeo 04-06 • Sport City Eu3 06-08 • Scarabeo Light 06-08 • Sport City Cube 08-12
300: Atlantic 10-11 • Scarabeo Light 09-10 • Sport City Street 12 • SR Max 11-14
R.O. 840193



100320240

400: Atlantic Sprint 05-08 • Scarabeo Light 06-08
500: Atlantic Sprint 05-08 • Scarabeo 03-06 • Scarabeo Light 06-08
R.O. 832697



DERBI

100320130

100320131

50: Atlantis 2T Eu2 07-09 • Atlantis 2T 10 • Atlantis 4T Eu2 07 • Atlantis 4T 04-06 • Atlantis 02 Bullet 03-05 • Atlantis 02 City 03-06 • Atlantis 02 Red Bullet 03 • Atlantis 02 Two Chic 05 • Atlantis 02 • Boulevard 2T 09-14 • Boulevard 4T Eu2 25 Km/h 09 • GP1 E2 03 • GP1 Eu2 05 • GP1 Open Eu2 06-09 • GP1 Race Eu2 05-07 • GP1 01-03 • Sonar 2T 09 • Variant Sport 2T 12
100: Boulevard 4T 10-11
R.O. 479561



100320150

125: Boulevard 02
150: Boulevard 02
R.O. 485118



100320270

250: Rambla E3 2Ver 08 • Rambla 08-09 • GP1 Low Seat Eu3 07-08 • GP1 06-07
300: Rambla 10-11
R.O. 840193



100320310

100320311

125: Boulevard Eu2 04-07 • Boulevard 4T Eu3 08-12 • Gp1 Eu2 06 • Gp1 Low Seat Eu3 07-08 • Rambla E3 2Ver 08 • Rambla 08-09 • Sonar 4T 09-11 • Variant Sport 4T E3 12
150: Boulevard 4T E3 10 • Sonar 4T 09
R.O. 845607



GILERA

100320120

50: Easy Moving 95-96 • Storm 94-95 • Typhoon 94-97
R.O. 289831



100320130

100320131

50: Dna Gp Experience 03-04 • Dna 00-07 • Ice 01-05 • Runner Poggiali 02 • Runner Purejet St 08 • Runner Purejet 02-11 • Runner Sp Special Edition 07 • Runner Sp St & Simoncelli 08-09 • Runner Sp 02-12 • Runner 97-00 • Stalker Naked 08 • Stalker Special Edition 07-08 • Stalker 97-11 • Storm Eu2 07 • Typhoon Xr 00
R.O. 479561



100320150

125: Dna 01 • Runner VX-VXR 00-01
R.O. 485118



100320200

125: Runner FX-FXR 97-02 • Typhoon XR 99-00
180: Runner FX-FXR 97-02
R.O. 487957



100320310

100320311

125: Nexus Eu3 07-08 • Runner Vx 05-06 • Runner Vx 4t Eu3 06-07 • Runner Vx Race 06 • Runner 4T ST Euro3 08-16
R.O. 845607



100320160

200: Runner VXR 02-06 • Runner VXR Euro3 07 • Runner VXR Race 05-06 • Runner VXR 4T St Euro3 08-11
R.O. 834774



100320270

250: Nexus Eu3 06-07 • Oregon 06-10
300: Nexus Eu3 08-11
R.O. 840193



100320240

500: Fuoco 4T 4V ie Eu3 LT 13-14 • Fuoco Eu3 07-13 • Nexus Eu3 06-11 • Nexus SP Eu3 06-07 • Nexus 03-05
R.O. 832697



HONDA

100320441

125: Pantheon FES 03-05 • Silver Wing FESs 07-12 • PES Injection 06-10 • SH 01-12
50: SH 01-12
R.O. 22102-KGF-910



100320660

125: SH Mode 14-15 • PCX 10-12
150: PCX 10-14
R.O. 22102-KZR-600



100320640

125: SH ABS 13-16
150: SH 13-16
R.O. 2210-K01-900



100320650

300: SH 07-16 • Forza ABS 14-16
R.O. 22102-KTW-900



KYMCO

100320410

125: Agility 4T Eu3 06-08 • Agility 4T 06 • Agility Carry 11 • Agility R16 08-12 • Agility Rs 09 • Like Lx 12 • Like 09 • Movie Eu3 06-07 • Movie XL Eu2 03-04 • Movie XL 01 • Movie 99-00 • People Eu2 03 • People 99-00 • People Eu3 07- 11 • People One I 13 • People S Dd Eu3 0708 • People S 05 • Super 8 08 • Super 8 09 • Vivio 00
150: Vivio 00 • Agility R16 08-09 • Movie Eu3 06-07
200: Agility R16 10 • Agility i Plus 14 • Agility R16 12 • Like 09 • Like Lx 12 • People S 07 • People S 05
R.O. 00126115



MALAGUTI

100320671

125: Madison R Restyling Eu2 03-04 • Madison R Restyling 02 • Madison 99-01 • Phantom Max 03
150: Madison T 99-01
R.O. 76007000



MBK

100320211

50: Mach G Eu1-Eu2 02-03 • Booster 01-02 • Booster Naked 03 • Booster Spirit 96-00 • Booster NG 95-03 • Stunt 00-02 • Evolis 92-95 • Flipper 01-02 • Flipper Cat 99-00 • Fizz 94-95 • Ovetto Eu1-Eu2 02-04
R.O. 3VLE76110000



100320671

125: XN Doodo 00-01 • XQ Thunder 01-02 • YP Skyliner 01-03
150: XN Doodo 01-02 • XQ Thunder 01-02 • YP Skyliner 01-02
180: YP Skyliner 03
R.O. 5DSE76110000



PEUGEOT

100320300

50: Buxy 94-97 • Elyseo 99 • Looxor 01-03 • Speedake 95-97 • Speedfight LC/AC 97-98 • Vivacity 99 • Zenith L 94-96
100: Elyseo 99-01 • Looxor 01 • Speedfight 97-00 • SV L 98 • Vivacity 99-01
R.O. 732801



PIAGGIO

100320120

50: Free 92-94 • NRG 94-96 • NTT 95-96 • Quartz 92-96 • Sfera RST 95-97 • Vespa ET2 97-05 • Zip 95-96 • Zip Bimodale 94-97 • Zip Fast Raider 93-97 • Zip RST 96-99
R.O. 289831



100320130
100320131

50: Fly 2T-4T 05-08 • Fly 4T 2V 12-15 • Fly 4T 4V 12-13 • Free FL 95-02 • Liberty 97-05 • Liberty 2T-4T 06-08 • Liberty PTT Eu2 04-05 • Liberty 4T PTT Double 09-15 • Liberty 4T Sport 06-08 • Liberty iget 4T 3V ie 15-16 • NRG Purejet 02-10 • Typhoon 01-09 • Vespa ET2 Iniezione 97-00 • Vespa ET4 00-05 • Vespa LX 2T 05-08 • Vespa LX 4T 4V 09-13 • Vespa LXV 2T 06-09 • Vespa Primavera 2T 13-15 • Vespa Primavera 4T 4V 13-16 • Vespa Sprint 4T 4V 14-16 • Zip 00-04 • Zip Sp Eu2 06-13 • Zip 2T 08-13
100: Fly 4T 06-08 • Free 02-03 • Zip 4T 06-10
R.O. 479561



100320140

125: Hexagon LX4 98-99 • Liberty 98-00 • Sfera 95-97 • Vespa ET4 96-98
R.O. 82523R



100320200

125: Hexagon LX-LXT 98-99 • Skipper LX 98-99
R.O. 487957



100320150

125: Beverly RST 04-05 • Beverly 01-03 • X8 04 • X9 Evolution 03
R.O. 485118



100320310
100320311

125: Beverly Tourer Eu3 07-10 • Beverly RST 04-07 • Beverly Eu3 MIC 07 • Carnaby 07-10 • Fly 05-07 • Fly Eu3 07-11 • Hexagon GTX 00 • Liberty 01-02 • Liberty 4T 06-07 • Liberty RST PTT 05-11 • Liberty Sport 06 • Liberty 4T Eu3 Delivery 07-15 • MP3 06-08 • Super Hexagon GTX 12” 01-02 • Vespa ET4 99-02 • Vespa LX 05-06 • Vespa Granturismo 03-07 • Vespa GTV 06-08 • Vespa LX Eu3 09-11 • Vespa LX ie 4T 10-13 • X7 Eu3 08 • X8 05-06 • X8 Premium Eu2 06-07 • X9 Evolution 03-06 • Zip 00-02
150: Fly 05-07 • Fly Eu3 08-11 • Liberty 01-02 • Liberty 4T Eu3 08 • Liberty Moc 4T 09-13 • Vespa ET4 99-02 • Vespa LX 05-06 • Vespa LX 4T FL 09 • Vespa LX Eu3 06-11 • Vespa S 4T ie 08-12 • X8 Street Eu2 06-08
R.O. 845607



100320691

125: Liberty iget 4T 3V ie 15-17 • Vespa LX Primavera 4T 3V ie 13-17 • Vespa Primavera 4T 3V iget ABS 16 • Vespa Sprint 4T 3V ie 14-15 • Vespa Sprint iget 4T 3V ABS 16-17
R.O. 1A000798



100320160

180: Hexagon GTX 00 • Super Hexagon GTX 12" 01-02 • X9 Amalfi 00-03
200: Beverly 01-03 • Carnaby 07-08 • Liberty 06 • Liberty 4t Eu3 07-08 • Vespa Granturismo 03-07 • X8 05-07 • X9 02-03
R.O. 834774



100320270

250: Beverly 06-07 • Beverly Cruiser 07-09 • Carnaby 08 • MP3 06-08 • MP3 LT 08-09 • Vespa GTS ABS 05-09 • Vespa GT 60 Eu3 06-07 • Vespa GTV 07-09 • X7-X8 Eu3 05-08 • X9 Evolution 04-06
300: Beverly ie Tourer 09-10 • Beverly RST 4T 4V 10-15 • Beverly ie ABS Eu4 16 • MP3 ie LT 10-11 • MP3 ie LT Sport 11-14 • MP3 Yourban ERL 11-15 • Carnaby Cruiser 09 • Vespa GTS Super 08-15 • Vespa GTV 4T 4V 10-13 • Vespa GTS ie 11-16 • X7 Evo ie Eu3 09
R.O. 840193



100320240

400: Beverly Eu3 06-07 • Beverly Tourer Eu3 08-10 • MP3 ie LT Touring 11 • MP3 Mic 08-10 • MP3 RL Touring 11 • MP3 07-08 • X8 Eu3 06-08 • X Evo 07-11
500: Beverly 02-06 • Beverly Cruiser 07-12 • Beverly Eu3 06-08 • MP3 LT Sport 11-13 • MP3 RL Sport 11-12 • MP3 LT Business ABS 14-16 • X9 Evolution 03-07 • X9 Evolution Abs 06-07 • X10 4T 4V ie Eu3 12-14
R.O. 832697



SYM

100320731 NEW

50: Jet 4 09-10 • Symphony S 10-14 • Fieddle 09-14



100320741 NEW

125: HD 03-11 • HD 2 11-14 • Symphony S 09-16
150: Symphony 09-14 • Fieddle 10-14
200: Jet 17-18 • Fieddle 15-17 • Symphony ST 17-18



YAMAHA

100320211

50: Aerox 97-02 • Breeze 94-95 • BW'S Bump 97-98 • BW'S Naked 03 • BW'S Ng 97-06 • BW'S Original 97-02 • Jog R 02-05 • Neo's 02-06 • Why Eu1 99-00 • Why Eu2 03-05 • Why 98-06
R.O. 3VLE76110000



100320671

125: XN Teo'S 00 • XQ Maxter 01-02 • YP Majesty 01-07
150: XN Teo'S 01-02 • XQ Maxter 01-02 • YP Majesty 01-02
180: YP Majesty 03-06
R.O. 5DSE76110000



100320681

125: N-Max 15-17
150: N-Max 17
R.O. 2DPE76110000



VARIATORI - *CVT*
APRILIA

100320020

50: Scarabeo 4T RST Eu3 06-09 • Scarabeo Quattro 09 • SR R R Factory 04-09 • SR Street 03-08 • Scarabeo 4T 02-06 • Scarabeo 4T 4V 09-14 • SR Iniezione e Carburatore 14 • SR Motard 4T 4V 13-14
R.O. CM110304



100320030

50: Mojito 04-10 • Sport City One 4T 08-10 • SR R R Factory Modello Carburatore 04-09 • SR Street Modello Carburatore 03-12
R.O.AP8515112



100320040

50: Scarabeo Street 05-06 • Scarabeo Street 2T Rst 06-09 • Sport City One 2T 08-09
R.O. CM110302



100320050

125: Mojito Retrò-Custom 99-01
R.O. AP8550509



100320060

125: Atlantic 03-05-Scarabeo 03-06 • Scarabeo Eu3 06-07 • Atlantic Eu3 06-12 • Scarabeo Light 07-08 • Scarabeo ie Light 09-12 • Sport City Eu3 06-08 • Sport City 04-06 • Sport City Cube 08-10 • Sport City Street 12 • SR Max 11-14
R.O. AP8580222-CM144403



100320190

125: Mojito 03-08 • Scarabeo Light 07-08 • Sport City One 08-11 • SR Motard 12-14
R.O. CM144402



100320170

200: Sport City Eu3 06-08 • Sport City 04-06 • Sport City Cube 08-10 • Atlantic 03-05 • Scarabeo 03-07
R.O. CM144404



100320260

250: Sport City 06-08 • Sport City Cube 08-12 • Atlantic 03-05
R.O. CM144407



100320340

250: Atlantic Eu3 06-08 • Scarabeo Light 06-08 • Sport City Cube 08-12
300: Atlantic 10-11 • Scarabeo Light 09-10 • Sport City Street 12 • SR Max 11-14
R.O. CM144408



100320330

400: Atlantic Sprint 05-08
R.O. 849913



100320230

500: Atlantic 01-09 • Atlantic Sprint 05-08 • Scarabeo Light 06-08 • Atlantic 01-04
R.O. AP8560180



DERBI

100320030

50: Atlantis 02-10 • Atlantis 2T Eu2 07-09 • Atlantis 4T Eu2 07 • Atlantis 50-100 4T 04-06 • Atlantis 02 Bullet 03-05 • Atlantis 02 City 03-06 • Atlantis 02 Red Bullet 03 • Atlantis 02 Two Chic 05 • Atlantis 02 02 • GP1 01-09 • GP1 Eu2 05 • GP1 Race Eu2 05-07 • GP1 Open Eu2 06-09 • GP1 01-03
R.O. CM110301



100320040

50: Atlantis 03-05 • Boulevard 09-14 • Sonar 09 • Variant Sport 2T 12
R.O. CM110302



100320060

125: GP1 Eu2 06 • GP1 Low Seat Eu3 07-08 • Rambla 08
R.O. CM144403





100320070

125: Boulevard 04-12 • Sonar 4T 09-11 • Variant Sport 12
R.O. CM103903



100320190

125: Boulevard Eu3 04-07 • Boulevard 4T Eu3 08-09
R.O. CM144402



100320080

150: Boulevard 02-04
R.O. CM103901



100320180

150: Boulevard Eu2 04-07 • Boulevard Eu3 10 • Sonar 4T 09
R.O. CM144401



100320170

200: Boulevard 05-06
R.O. CM144404



100320260

250: GP1 Low Seat Eu3 07-08 • GP1 06-07
R.O. CM144407



100320340

250: Rambla Eu3 08 • Rambla 08-09
300: Rambla 10-11
R.O. CM144408



GILERA

100320020

50: DNA GP Experience 03-04 • Runner Purejet 02-11 • Runner 97-00
R.O.CM110304



100320030

50: Dna 05-07 • Runner SP 05-12 • Stalker 97-04 • Storm Eu2 07 • Typhoon XR 00
R.O. CM110301



100320040

50: Dna 00-02 • Ice 01-05 • Runner Poggiali 02 • Runner SP 02-04 • Stalker Naked 08 • Stalker 04-11
R.O. CM110302



100320060

125: Nexus Eu3 ie 08-09 • Runner VX-VXR-SC 07-13 •Runner VX-VXR 00-07 • DNA 01
R.O. CM103904-CM144403



100320090

125: Runner FX-FXR 97-02 • Typhoon X-XR 99-00 • Typhoon 95-98
R.O. CM102901



100320170

200: Runner VXR 4T ST Eu3 08 • Runner VXR 05-07
R.O. CM144404



100320230

500: Fuoco 07-09 • Nexus Eu3 06-09 • Nexus SP Eu3 06-07
R.O. 833291



HONDA

100320350

125-150: SH



100320420

125: PCX



100320751 NEW

300: SH 07-16 • Forza ABS 13-17



KYMCO

100320380

50: Agility 4T Carry 11 • Agility R10 06 • Agility R12 05-08 • Agility RS 09 Like 4T 09



100320400

125: Agility R16 08-12 • Movie 99-00 • People 99-00 • People Eu2 03 • People Eu3 07-11 • People S 05 • People S Eu3 07-08 • Super8 08-09 • Vivio 00
150: Agility R16 08-09
200: People S 05 • People S i 07



100320431

125: Agility 4T Eu3 06-08 • Agility 4T 06 • Agility Carry 11 • Agility RS 09 • Like LX 12 • Like 09 • Movie Eu3 06-07 • Movie XL Eu2 03-04 • Movie XL 01 • People One i 13
200: Agility i R16 10 • Agility R16 12 • Like i 09 • Like LX 12



100320510

250: Yup 03 • X Citing i 05-07 • People S 06-07 • People LC 03-04 • Grand Dink 01-04 • B&W 03 • B&W 00



MBK

100320280

MOTORI MINARELLI - ***MINARELLI ENGINES***
Vari modelli - *Various models*



100320290

250: YP Skyliner 00-03 • YP Skyliner ABS 03



100320370

300: XC Kilibre 03



PIAGGIO

100320010

50: Free FL 95-02 • Free 92-94 • NRG 94-96 • Quartz 92-96 • Sfera 94-97 • Zip Bimodale 94-97 • NTT 95-96 • Zip 95-99 • Zip Fast Rider 93-97
R.O. 430189



100320020

50: Liberty 4T 00-02 • NRG Purejet 02-08 • NRG RST MC2 96-98 • Vespa ET4 00-05 • Vespa S 4T 4V 08-09 • Zip 4T 00 • Vespa LX 4T-4V 09
R.O. CM110304



100320030

50: Diesis 01 • Fly 4T 05-08 • Fly 4T 05-08 • Free 95-02 • Liberty 4T 05-09 • Liberty 97-05 • NRG 99-04 • Nrg Power 05-09 • Typhoon 01-09 • Vespa ET2 97-05 • Vespa LX 4T 05-08 • Zip 4T 00-08 • Zip Sp 01-09
R.O. CM110301



100320040

50: Liberty 2T 97-09 • Vespa ET2 97-00 • Vespa LX 2T 05-10 • Vespa LXV 2T 06-08 • Vespa S 2T 07-08 • Zip 2T 08-09 • Zip 00-04
R.O. CM110302



100320050

125: Hexagon LX4 98-99 • Liberty 98-00 • Sfera 95-97 • Vespa ET4 96-98
R.O. 82522R



100320060

125: Beverly 01-03 • Beverly 07-13 • Carnaby 07-10 • Hexagon GTX 00 • MP3 ie Yourban 08-12 • Super Hexagon GTX 01-02 • Vespa GT 03-07 • Vespa GTS 4T ie 07-13 • Vespa GTV 07-08 • X Evo 07-12 • X10 ie 12-13 • X7 Eu3 08-10 • X8 Premium 05-07 • X9 Evolution 01-07
R.O. CM144403



100320070

125: Beverly 01-03
R.O. CM103903



100320190

125: Fly 05-08 • Liberty 01-02 • Liberty 4T 06-08 • Liberty 04-06 • Skipper 4T 00-02 • Vespa ET4 99-02 • Vespa LX 05-09 • Vespa LXV 4T 06-09 • Vespa S 4T 07-09 • X8 Street Eu2 06-07 • Zip 00-02 • Vespa LXV ie 4T 10
R.O. CM144402



100320080

150: Liberty 01-02 • Skipper 00-02 • Vespa ET4 99-02
R.O. CM103901



100320090

150: Skipper LX 98-99
R.O. 483981



100320180

150: Fly 05-08 • Liberty 4T 08-09 • Vespa LX 05-09 • Vespa S 4T 08-09 • X8 Street Eu2 06-08
R.O. CM144401



100320170

200: Carnaby 07-08 • Liberty 4T Eu3 07-08 • Liberty 4T Sport Eu3 06-07 • Liberty Sport 06 • Liberty 06 • Vespa Granturismo 06-07 • X8 05-07 • Beverly 01-03
R.O. CM144404



100320260

250: Beverly 04-07 • MP3 06-09 • Vespa GT 60 06-07 • Vespa GTS ABS 05-09 • Vespa GTV 06-09 • X7 Eu3 08 • X8 Eu3 05-08 • X9 Evolution 04-06 • X-Evo 07
R.O. CM144407



100320340

250: Beverly 06-09 • Beverly RST 10-16 • Carnaby 08-12
300: Beverly Ie 09 • Carnaby Cruiser 09 • Vespa GTS Super 08-16 • X7 Evo ie 09-10 • MP3 ie 10-16
R.O. CM144408



100320330

400: Beverly 06-09 • MP3 07-09 • X8 Eu3 06-08 • X-Evo 07-09
R.O. 849913



100320230

500: Beverly 02-11 • X9 Evolution ABS 06-07 • X9 01-07
R.O.833291



SYM

100320711 NEW

50: Jet 4 09-10 • Symphony S 10-14 • Fieddle 09-14



100320721 NEW

125: HD 03-11 • HD 2 11-14 • Symphony S 09-16
150: Symphony 09-14 • Fieddle 10-14
200: Jet 17-18 • Fieddle 15-17 • Symphony ST 17-18



YAMAHA

100320280

MOTORI MINARELLI - ***MINARELLI ENGINES***
Vari modelli - *Various models*



100320360

125: VP X-City 08-11



100320701 NEW

125: N-Max 15-17
150: N-Max 17-18
R.O. 2DPE76200000



100320290

250: YP Majesty ABS 03 • YP Majesty 00-03



100320370

250: X-Max 06-12
300: XC Versity 06



SEMIPULEGGE CONDOTTE FISSE - *FIXED DRIVEN HALF PULLEY ASSY*
APRILIA

100340100

Per frizioni Ø 107 mm | *For Ø 107 mm clutches*

MOTORI MINARELLI-APRILIA | ***MINARELLI-APRILIA ENGINES***



100340110

125: Mojito Retrò-Custom 99-01
R.O. AP8550346



100340210

125: Atlantic 03-05 • Scarabeo 03 • Sport City 04-06 • Sport City Street 12-13 • SR Max 11-13
R.O. AP8575013



100340200

200: Atlantic 03-05 • Scarabeo 03
250: Atlantic 03-05 • Scarabeo 04-06 • Sport City Eu3 06-08
300: Scarabeo Light 09 • Sport City Cube 08
R.O. AP8580208



100340150

400-500: Atlantic Sprint 01-08 • Scarabeo light 06-08
R.O. AP8560196



DERBI

100340210

125: Boulevard 02-04 • GP1 Eu2 06
150: Boulevard 02-07
200: Boulevard 05
R.O. 828713



100340200

250: GP1 06-07 • Rambla 08
R.O. 833669



GILERA

100340210

125: Nexus Eu3 07-08 • Runner VX 05-06
R.O. 830580



100340200

200: Runner VXR 05-06 • Nexus Eu3 06-07
250: Nexus SP Eu3 06-07 • Oregon 06-08
300: Nexus Eu3 08-09
R.O. 833669



100340150

500: Fuoco 07-09 • Nexus 03-05 • Nexus Eu3 06-08
R.O. 832774-846696



KYMCO

100340251

125: Agility Carry • Agility Plus 14-16 • Agility RS 09 • Heroism 95-97 • Like LX 12 • Like 09 • Movie 06-07 • Movie XL 01-04 • Movie 99-00 • People 99-03 • People 07-11 • People One 13-16 • People S 05-08 • Super 8 08-09 • Vivio 00
150: Agility R16 Plus 16 • Heroism 95-97 • Movie 06-07
200: Agility R16 10-12 • Agility i Plus 14 • Like 09 • Like LX 12 • People S 05-07
R.O. 00127768





HONDA

100340301

125: S-Wing 07-10 • PES PS 06-09 • SH Mode 14-18 • SH/SH abs 05-16
150: Pantheon 04-05 • S-Wing 07-09 • SH/SH abs 01-16
R.O. 23205-KGF-911



MALAGUTI

100340271

50: Centro 93-00 • Ciak 99-03 • F10 92-00 • F12 Phantom LC 94-02 • F15 Fire Fox 02-03 • Yesterday 97-00
R.O. 72601800



100340100

Per frizioni Ø 107 mm | *For Ø 107 mm clutches*

MOTORI MINARELLI-MBK 50 CC | ***MINARELLI-MBK ENGINES 50 CC***



MBK

100340230

250: Skyliner 00-03 • Skyliner ABS 03
300: Kylibre 03
R.O. 5GM176680010



PIAGGIO

100340130

PULEGGIA | *PULLEY*
Ø 90 mm

50: Ciao • Bravo • Si Monomarcia Modello senza variatore - *No CVT model*
R.O. 103049



100340291

50: Fly 2T 05-07 • Fly 4T 05-07 • NRG Power 05-10 • Typhoon 09-11 • Vespa LX 4T 09-11
100: Fly 4T 06-14
R.O. 479552



100340110

125: Hexagon LX4 98-99 • Liberty 98-00 • Sfera 95-97 • Vespa ET4 96-98
R.O. 4780745



100340210

125: Beverly 01-03 • Carnaby 07-09 • Fly 05-07 • Liberty 01-02 • MP3 07-08 • Skipper 4T 00-02 • Vespa ET4 99-02 • X7 08 • Zip 00-02
150: Fly 05-07 • Liberty 4T 08 • Vespa LX 05-06
180: X9 Amalfi 00-03
200: Liberty 06
R.O. 830580



100340331

125: Liberty 4T iget 17-18 • Liberty iget 4T 3V 15-18 • Vespa LX Primavera 4T 3V 13-17 • Vespa Primavera 4T 3V ABS 16-18 • Vespa Sprint 4T 3V ie 14-18
R.O. B019156



100340200

200: Carnaby 07-08 • X9 02-03 • Beverly 06-07
250: Carnaby 08 • MP3 06-08 • Vespa GT 60 Eu3 06-07
300: Beverly 300 ie Tourer 09 • Carnaby Cruiser 09 • X7 Evo ie Eu3 09
R.O. 833669



100340150

400: MP3 Mic 08-09
500: Beverly 02-06 • Beverly Cruiser 07-09 • X9 Evolution 03-05
R.O. 832774-8466960



YAMAHA

100340100

Per frizioni Ø 107 mm | *For Ø 107 mm clutches*

MOTORI MINARELLI-YAMAHA | ***MINARELLI-YAMAHA ENGINES***



100340230

250: X-City 07-12 • Majesty ABS 03 • Majesty 96-03 • X-Max ABS 11-12 • X-Max 05-12
300: Versity 03-06
R.O. 5GM176680010



SEMIPULEGGE CONDOTTE SCORREVOLI - *SLIDING DRIVEN HALF PULLEY*
APRILIA

100340020

50: Mojito 04-08 • Scarabeo 4T 02-06 • Sport City One 2T-4T 08-09 • SR Street 03-08
100: Scarabeo 4T 01-04
R.O.AP8551055



100340050

Per frizioni Ø 107 mm | *For Ø 107 mm clutches*

MOTORI MINARELLI-APRILIA | ***MINARELLI-APRILIA ENGINES***



100340190

125: Scarabeo ie Light 07-12
250: Atlantic 03-05 • Scarabeo 04-06 • Sport City Cube 06-08
R.O.AP8577055
300: Scarabeo Light 09 • Sport City Street 12 • SR Max 11-14
R.O. 878651



100340220

125: Atlantic 06-08 • Sport City 04-06 • Mojito 03-07 • Scarabeo 03-06 • Sport City Cube 06-10
200: Scarabeo Light 07-08
R.O. 827499



100340240

400-500: Scarabeo Light 06-08
R.O. 846695-846696



DERBI

100340020

50: Atlantis 2T-4T 07-09 • GP1 01-03
R.O. 827893



100340220

125: GP1 06 • Rambla 08
150-200: Boulevard 02-05
R.O. 87899



100340190

250: Rambla 08-09 • GP1 06-08
R.O. 841774



GILERA

100340190

250: Nexus 06-07 • Nexus SP 06-07 • Oregon 06-08
300: Nexus 08-09
R.O. 841774



100340220

125: Nexus 07-08 • Runner VX 05-06
180: DNA 01
R.O. 827499



100340240

500: Fuoco 07-09 • Nexus 03-09 • Nexus SP 06-07
R.O. 846695-832808



KYMCO

100340261

125: Agility 4T 06-08 • Agility Carry 17 • Agility Carry 11 • Agility Plus 14-16 • Agility RS 09 • Like LX 12 • Like 09 • Movie 06-07 • Movie XL 01-04 • People 99-03 • People 07-11 • People One 13-16 • Vivio 00
150: Agility R16 Plus 16 • Movie 06-07
200: Agility R16 10 • Agility i Plus 14 • Agility R16 12 • Like i 09 • Like LX 12 • People S 05-07
R.O. 00126094





HONDA

100340311

125: Pantheon 04-05 • S-Wing 04-10 • PES i 06-09 • SH i 05-07
R.O. 23224-KGF-912



MALAGUTI

100340281

50: Centro 93-00 • Ciak 99-03 • F10 92-03 • F12 Phantom LC 94-02 • F15 Fire Fox 02-03 • Yesterday 97-00
R.O. 72601900



MBK

100340050

Per frizioni Ø 107 mm | *For Ø 107 mm clutches*
MOTORI MINARELLI-MBK | ***MINARELLI-MBK ENGINES***



100340030

250: Skyliner 00-03 • Skyliner ABS 03
300: Kylibre 03
R.O. 4HC176701100



PIAGGIO

100340010

50: Free 92-02 • NRG 94-98 • NTT 95-96 • Quartz 92-96 • Sfera 94-97 • Vespa ET2 97-05 • Zip 93-00
R.O. 430191



100340020

50: Fly 2T-4T 05-07 • Liberty 2T 97-08 • Liberty 4T 05-08 • NRG 02-04 • Typhoon 01-09 • Vespa ET2/ET4 97-05 • Zip 00-04
100: Fly 4T 06-07 • Zip 4T 06-08
125: Vespa S 4T ie 09
R.O.827893



100340120

125: Hexagon LX4 98-99 • Liberty 98-00 • Sfera 95-97 • Vespa ET4 96-98
R.O.4780725



100340220

125: Beverly 01-03 • Beverly Eu3 07-08 • Carnaby 07-09 • MP3 07-08 • Vespa GT 03-07 • X8 04-06
150: Fly 05-07 • Liberty 01-02 • Liberty 4T 08 • Vespa ET4 99-02 • Vespa LX 05-06
180: Hexagon GTX 00 • X9 Amalfi 00-03
200: Liberty 4T 06-08
R.O.827499



100340321

125: Liberty 4T 3V ie 13-14 • Vespa LX Primavera 4T 3V ie 13-17 • Vespa Sprint 4T 3V ie 14-15
R.O. B018461



100340190

250: Beverly 06-07 • Beverly Cruiser 07-09 • Carnaby 08 • MP3 06-08 • Vespa GTV 06-09 • X7 08 • X8 05-08 • X9 Evolution 04-06
300: Beverly 300 ie Tourer 09 • Vespa GTS Super 08 • X7 Evo ie 09
R.O.841774



100340240

400: MP3 08-09
500: Beverly 02-08 • Beverly Cruiser 07-09 • X9 Evolution 03-07 • X9 Evolution ABS 06-07
R.O. 846695-832808





YAMAHA

100340050

Per frizioni Ø 107 mm | *For Ø 107 mm clutches*

MOTORI MINARELLI-YAMAHA | ***MINARELLI-YAMAHA ENGINES*** -



100340030

250: X-City 07-12 • Majesty ABS 03 • Majesty 96-03 • Black X-Max 09 • X-Max 05-12
300: XC Versity 03-06
R.O. 4HC176701100





15 X 12 (mm)

GRAMMATURE DISPONIBILI - *WEIGHTS*

Codice RMS *RMS Code*	●	●	Codice a barre *Barcode*	N°	Gr.
100410230				6	2,3
100410330				6	3,3
100410350				6	3,5
100410400				6	4
100410430				6	4,3
100410470				6	4,7
100410500				6	5
100410520				6	5,2
100410550				6	5,5
100410580				6	5,8
100410620				6	6,2
100410650				6	6,5
100410680				6	6,8
100410700				6	7
100410720				6	7,2
100410750				6	7,5
100410770				6	7,7
100410810				6	8,1
100410830				6	8,3
100410900				6	9

Modello *Model*	CC	Anno *Year*	Gr.
APRILIA			
Amico	50	92-98	6,5
Amico Lx-Sport	50	92-93	6,5
Gulliver	50	95-98	6,5
Rally	50	95-03	6,5
Scarabeo	50	93-06	6,5
Scarabeo I.E. (Di Tech)	50	02	8,6
Sr (Cil.Orizz. Raff. Aria)	50		5,2
Sr Lc Stealth Racing www	50	94-01	6,5
Scarabeo Mot Minarelli	100	00	7,5
Carosello	50		7
BENELLI			
491 Gt	50	98-99	6,5
491 Rr	50	98-01	5,5
Naked	50	02	6,5
Pepe	50	99-01	6,5
BETA			
Ark AC/LC	50	96-08	5,5
Elkon	50	99-03	6,8
Quadra Chrono 502	50	96-99	5,5
Tempo	50	94-95	7
CAGIVA			
City	50	91-94	7,5
ITALJET			
Bazooka	50		6,5
Pista	50		6,5
MALAGUTI			
Centro Base	50	93-94	7
Centro SI-Kat	50	94-98	7
Crosser Cr1	50	95-98	5,5
F10 Kat	50	99-00	6,5

Modello *Model*	CC	Anno *Year*	Gr.
F12 Phantom	50	94-98	6,5
Yesterday - Euro	50	97-00	6,5
MBK			
Booster	50	01-02	6,2
Booster Road	50	94-95	6,5
Booster Spirit Eu2	50	02-03	6,2
Evolis	50	94-95	7
Fizz	50	94-95	7
Flipper - Cat	50	98-02	6,5
Ovetto Eu1-Eu2	50	02-04	6,5
Sorriso	50	91-92	6,5
Booster	100	99-01	8,3
Nitro	100	00-02	9
Ovetto	100	00-02	9
YAMAHA			
Aerox	50	97-12	5,5
Breeze	50	94-95	7
Bw'S	50	04-12	5,5
Bw'S-Naked	50	03-04	6,2
Bwâ€™S-Naked	50	09-12	5,5
Bw'S Ng	50	04-06	5,5
Bw'S Original Eu2	50	02-03	6,2
Jog R	50	02-11	6,5
Neo'S	50	97-12	6,5
Slider	50	00-02	6,2
Spy	50	95-98	7
Why	50	98-02	6,5
Aerox	100	00-02	9
Bw'S	100	99-01	8,3
Neo'S	100	99-02	9

● Grammatura non originale | *Not original weight* ● Alte prestazioni | *High performances*



16 X 13 (mm)

GRAMMATURE DISPONIBILI - *WEIGHTS*					
Codice RMS *RMS Code*	●	●	**Codice a barre** *Barcode*	**N°**	**Gr.**
100420270				6	2,7
100420360				6	3,6
100420400				6	4
100420470				6	4,7
100420500				6	5
100420510				6	5,1
100420550				6	5,5
100420570				6	5,7
100420620				6	6,2
100420650				6	6,5
100420670				6	6,7
100420700				6	7
100420750				6	7,5
100420800				6	8
100420850				6	8,5
100420900				6	9
100420950				6	9,5
100421000				6	10
100421050				6	10,5
100421100				6	11

Modello *Model*	**CC**	**Anno** *Year*	**Gr.**
GILERA			
Easy Moving	50	95-96	8,5
Storm	50	94-95	8,5
Typhoon	50	94-97	8,5
Gp Dio	50	91	8,5
HONDA			
Gp Dio	50	91	8,5
Sh	50	96	9
Shadow	50		9
Sj Bali	50	93	8,5
Sky	50	97	5
Vision Prima Serie	50	85-87	7,5
Nps Zoomer	50	-	5,5
Sh	100	96-99	10
Sj Bali	100	96-99	10
KYMCO			
Agility 4T R10	50	06	6,5
Agility 4T R12	50	07-08	6,5
Agility 4T R16	50	08-12	6,5
Agility 2T R16	50	10	8,5
Agility Plus 2T	50	14	8,5
B&W	50	02	8,5
Dink 50 4T	50	07	6,5
Dink Classic Eu2	50	03	8,5
Dink Lc	50	98-02	8,5
Fever Zx	50	99-00	8,5
Heroism	50	95-97	7,5
Like 2T	50	09	8,5
Like 4T	50	09	6,5
Mxer	50	02-03	7,5
People	50	99-00	8,5
People Eu2	50	03	8,5
People Eu2	50	08-11	8,5
People S	50	05-08	8,5
Sento	50	08	6,5

Modello *Model*	**CC**	**Anno** *Year*	**Gr.**
Sniper	50	93	7,5
Super 8	50	07	6,5
Super 8 2T	50	13	8,5
Super 9	50	00	8,5
Super 9 Sport Eu2	50	03	8,5
Top Boy	50	97-00	8,5
Vitality 2T	50	04	8,5
Vitality 4T	50	04	6,5
Yup	50	02	8,5
PEUGEOT			
Buxy	50	94-97	9
Elyseo	50	99	9
Looxor	50	01-03	9
Metal-X	50	02	9
Speedake (Keihin)	50	95-97	7,5
Speedake (Mikuni)	50	95-97	9
Speedfight AC-LC	50	97-98	9
Squab	50	95-97	9
Sv Geo	50	91-95	11
Sv Geo (Mod.'94)	50	91-95	8,5
Trekker	50	98-00	9
Vivacity	50	99	9
Zenith L	50	94-96	8,5
PGO			
Bic Max	50		8,5
PIAGGIO			
Free	50	95-02	8,5
Nrg	50	94-96	8,5
Nrg Rst Mc2 (96-97)	50	96-98	7
Ntt	50	95-96	8,5
Quartz	50	92-96	8,5
Sfera Rst	50	95-97	8,5
Zip Rst	50	96-99	8,5
Zip Fast Rider-Bimodale	50	94-97	8,5

● Grammatura non originale | *Not original weight* ● Alte prestazioni | *High performances*



17 X 12 (mm)

GRAMMATURE DISPONIBILI - *WEIGHTS*					
Codice RMS *RMS Code*	●	●	**Codice a barre** *Barcode*	**N°**	**Gr.**
100430300				6	3
100430360				6	3,6
100430400				6	4
100430460				6	4,6
100430520				6	5,2
100430550				6	5,5
100430580				6	5,8
100430600				6	6
100430630				6	6,3
100430660				6	6,6
100430680				6	6,8
100430720				6	7,2
100430750				6	7,5
100430830				6	8,3
100430870				6	8,7

Modello *Model*	**CC**	**Anno** *Year*	**Gr.**
APRILIA			
Habana Kat	50		7,5
Sr (Mod.00 Mot Suzuki)	50		7,5
Sr Di Tech (Mod.01)	50		7,5
ATALA			
Hacker	50		5,5
CAGIVA			
Progress	50	97-99	6
DERBI			
Atlantis	50	99-01	7,2
Atlantis Kat (Raff. Aria)	50		5,8
Atlantis Lc	50	99-01	7,2
Hunter	50	96-97	6,3

Modello *Model*	**CC**	**Anno** *Year*	**Gr.**
Paddok Lc	50	98-01	6
Predator Lc	50	98-01	7,2
ITALJET			
Formula Lc	50	97	5,5
MALAGUTI			
Ciak	100	99-00	6,6
SUZUKI			
Address	50	92-95	6,6
Katana V-Y	50	97-00	7,2
Sepia S	50	95-97	6,6
Zillion	50	99	6,8
Ay-Ajw K1-K4	50	01-04	6,6

17 X 13,5 (mm)

GRAMMATURE DISPONIBILI - *WEIGHTS*					
Codice RMS *RMS Code*	●	●	**Codice a barre** *Barcode*	**N°**	**Gr.**
100440510				6	5,1
100440520				6	5,2
100440660				6	6,6
100440700				6	7
100440840				6	8,4
100440940				6	9,4

Modello *Model*	**CC**	**Anno** *Year*	**Gr.**
PIAGGIO			
Sfera	50	91-93	5,2
Zip	50	92-93	5,2

● Grammatura non originale | *Not original weight* ● Alte prestazioni | *High performances*



18 X 14 (mm)

GRAMMATURE DISPONIBILI - *WEIGHTS*					
Codice RMS *RMS Code*	●	●	**Codice a barre** *Barcode*	**N°**	**Gr.**
100400710				6	12,7
100400090				6	13
100400230				6	13,5
100400720				6	14
100400100				6	14,5
100400240				6	15,5

Modello *Model*	**CC**	**Anno** *Year*	**Gr.**
HONDA			
Nsc Vision	110	-	14,5
KYMCO			
Agility 4T	125	06	13,5
Agility 4T Eu3	125	06-08	13,5
Agility R16	125	09-12	13
Agility Carry	125	11-12	13,5
Agility R16	125	09-12	13
Agility Plus	125	14	13
Downtown 125I	125	09	13
Downtown I	125	09	13
Heroism	125	95-97	13
Heroism	125	95-97	13
K-Xct I	125	12-14	13
Like	125	09	13,5
Like Lx	125	12	13,5
Movie	125	99-00	13
Movie	125	99-00	13
People	125	99-00	13
People Eu3	125	07-11	13
People S	125	05	13
People Gti	125	10-12	13
People Eu2	125	03	13
People	125	99-00	13
People Eu3	125	07-11	13
People Gti	125	10	13
People S DD Eu3	125	07-08	13
People S	125	05	13

Modello *Model*	**CC**	**Anno** *Year*	**Gr.**
Super 8	125	08-09	13
Super 8	125	08-09	13
Vivio	125	00	13
Vivio	125	00	13
People One I	125	13-14	13,5
Agility R16	150	08-09	13
Agility	150	08-09	13
Heroism	150	95-97	14,5
Movie 150 Eu3	150	06-07	15,5
People	150	99-00	14,5
Vivio	150	00	14,5
Agility R16	200	10-12	13,5
Like 200I	200	09	13,5
Like Lx	200	12	13,5
People S	200	05	13
People S I	200	07	13
Agility Plus	200	14	13,5
Agility I Plus	200	14	13
MALAGUTI			
Ciak	125	00-01	13
Ciak Master	125	04	13
Ciak Master Eu3	125	06	13
Ciak	150	00-02	14,5
Ciak Master	150	04	14,5
Ciak Master Eu2	200	06	13
APPLICAZIONI VARIE			
-	-	-	12,7
-	-	-	14

18 X 15 (mm)

GRAMMATURE DISPONIBILI - *WEIGHTS*					
Codice RMS *RMS Code*	●	●	**Codice a barre** *Barcode*	**N°**	**Gr.**
100400010				6	10,7

Modello *Model*	**CC**	**Anno** *Year*	**Gr.**
APRILIA			
Leonardo (I Serie)	125	96-98	10,7

● Grammatura non originale | *Not original weight* ● Alte prestazioni | *High performances*



RULLI PULEGGE

ROLLER SETS

19 X 14 (mm)

GRAMMATURE DISPONIBILI - *WEIGHTS*					
Codice RMS *RMS Code*	●	●	**Codice a barre** *Barcode*	**N°**	**Gr.**
100400130				6	12

Modello *Model*	**CC**	**Anno** *Year*	**Gr.**
APRILIA			
Mojito Retro' - Custom	125	99-01	12
ITALJET			
Torpedo	125	98-00	12
PIAGGIO			
Hexagon Lx4	125	98-99	12
Liberty	125	98-00	12

Modello *Model*	**CC**	**Anno** *Year*	**Gr.**
Sfera	125	95-97	12
Vespa Et4	125	96-98	12

19 X 15,5 (mm)

GRAMMATURE DISPONIBILI - *WEIGHTS*					
Codice RMS *RMS Code*	●	●	**Codice a barre** *Barcode*	**N°**	**Gr.**
100450370				6	3,7
100450400				6	4
100450430				6	4,3
100450480				6	4,8
100450530				6	5,3
100450532 (CM1102035)	●			6	5,3
100450550				6	5,5
100450570				6	5,7
100450600				6	6
100450630				6	6,3
100450642 (CM1102025)	●			6	6,4
100450650				6	6,5
100450680				6	6,8
100450720				6	7,2
100450750				6	7,5
100450752 (CM1102015)	●			6	7,5
100450780				6	7,8
100450830				6	8,3
100450870				6	8,7
100450982 (CM1102045)	●			6	9,8

Modello *Model*	**CC**	**Anno** *Year*	**Gr.**
APRILIA			
Mojito	50	04-08	6,4
Scarabeo 4T 4V	50	10-12	5,3
Scarabeo Quattro	50	09	5,3
Scarabeo 2T	50	09-12	7,5
Scarabeo Street	50	05-06	7,5
Sport City One 2T	50	08-11	7,5
Sport City One 4T	50	08-10	6,4
Sr R Factory Carb.	50	10-12	5,3
Sr R Factory Ie	50	10-12	5,3
Sr R R Factory (Iniez)	50	04-09	5,3
Sr R R Factory Carb)	50	04-09	6,4
Sr Street (Carb.)	50	03-08	6,4
Sr Street (Iniez)	50	03-08	5,3
DERBI			
Atlantis 02 Bullet	50	03-05	6,4
Atlantis 50 4T	50	04-06	6,4
Atlantis 2T Eu2	50	07-10	6,4
Gp1	50	01-03	5,3
GILERA			
Dna	50	03-07	6,4
Dna	50	00-02	7,5
Ice	50	01-05	7,5
Runner	50	97-00	5,3
Runner Purejet	50	02-11	5,3
Stalker	50	97-11	7,5
Storm Eu2	50	07	6,4
Typhoon 2T Eu2-3	50	10-12	7,5

Modello *Model*	**CC**	**Anno** *Year*	**Gr.**
PIAGGIO			
Diesis	50	01	6,4
Fly 2T	50	10-11	7,5
Fly 4T	50	08-11	9,8
Fly 4T	50	12	5,3
Fly 4T 4V	50	12-13	5,3
Free Delivery	50	00-01	6,4
Liberty	50	97-05	6,4
Liberty (Cat.'00)	50	97-05	7,5
Liberty 2T	50	06-11	7,5
Liberty 4T	50	00-02	5,3
Liberty 4T	50	05-08	6,4
Liberty Ptt Eu2	50	04-11	7,5
Nrg Mc3	50	01-04	6,4
Nrg Purejet	50	10-11	5,3
Typhoon	50	01-09	6,4
Vespa Et2	50	97-05	6,4
Vespa Et2 Iniezione	50	97-00	7,5
Vespa Et4	50	00-05	5,3
Vespa Lx 2T	50	05-08	7,5
Vespa Lx 4T 4V	50	09-13	5,3
Vespa Lx 4T-4V Touring	50	10-13	5,3
Vespa S 4T-4V	50	08-09	5,3
Vespa S 4T-4V & College	50	08-12	5,3
Vespa S 2T	50	07-11	7,5
Vespa Primavera 4T-4V	50	13.15	5,3
Vespa Sprint 4T-4V	50	14	5,3
Zip	50	00-04	7,5
Zip 2T	50	08-11	7,5
Zip 4T	50	00-12	6,4

● Grammatura non originale | *Not original weight* ● Alte prestazioni | *High performances*



19 X 17 (mm)

GRAMMATURE DISPONIBILI - *WEIGHTS*

Codice RMS *RMS Code*	●	●	Codice a barre *Barcode*	N°	Gr.
100400250				6	7
100400252 (CM1038045)	●			6	7,3
100400260				6	8
100400692 (CM1038035)	●			6	8,6
100400272 (CM1038015)	●			6	10
100400972	●			6	10,4
100400270				6	9,5
100400290		●		6	11
100400160				6	12,5
100400300				6	13
100400140				6	15
100400982	●			6	15,6

Modello *Model*	CC	Anno *Year*	Gr.
APRILIA			
Atlantic Eu3	125	06-08	7,3
Mojito	125	03-08	8
Scarabeo Light	125	07-09	8
Sport City	125	04-06	7,3
Sr	125	99-01	13
Sr Motard	125	12	8
Sr	150	99-01	13
DERBI			
Boulevard	125	02-04	8,6
Boulevard 4T Eu3	125	08-12	8
Gp1 Eu2	125	06	7,3
Rambla	125	08	7,3
Boulevard	150	02-04	10
GILERA			
Dna	125	01	7,3
Nexus Eu3 Ie	125	08-09	7,3
Runner Fx-Fxr	125	97-02	15
Runner Vx	125	05-06	7,3
Typhoon	125	95-98	13
PIAGGIO			
Beverly '02	125	02	7,3
Beverly '01 e '03	125		8,6
Beverly Eu3	125	07-08	7,3
Beverly Tourer Eu3	125	08-09	7,3
Carnaby	125	07-09	7,3
Fly	125	05-07	8
Fly 4T 3V Ie Eu3 Dt-Lem	125	12-13	10
Fly 4T 3V Ie Eu3 Lem	125	12-13	10,4
Fly 4T 3V Ie E3 Dt	125	13-15	10,4
Fly 4T 3V Ie Eu3 Lem	125	12-13	10,4
Hexagon	125	94-97	13
Hexagon Gtx	125	00	7,3

Modello *Model*	CC	Anno *Year*	Gr.
Liberty	125	01-02	8,6
Liberty 4T	125	06-07	8,6
Mp3	125	07-08	7,3
Super Hexagon Gtx 12"	125	01-02	7,3
Typhoon 4T 2V Eu3	125	10-11	8,6
Vespa Et4	125	99-02	8,6
Vespa Granturismo	125	03-07	7,3
Vespa Lx	125	05-06	8,6
Vespa Lx 4T 3V Ie-Touring	125	13	10
Vespa Lx 4T 3V Ie - Touring	125	12-13	10,4
Vespa Lx 4T 3V Ie - Touring	125	12-13	10,4
Vespa S 4T 3V Ie	125	12	10,4
Vespa S 4T 3V Ie	125	12	9,5
Vespa 946 4T 3V Abs	125	12-13	10
Vespa 946 4T 3V Abs	125	13-15	10,4
X8	125	04-06	7,3
X9	125	01-02	7,3
X9 Evolution	125	03-06	7,3
Zip	125	00-02	8,6
Fly	150	05-11	10
Liberty	150	01-02	10
Liberty Moc 4T	150	09-10	10
Liberty 4T 3V Lem	150	13-14	15,6
Skipper	150	94-97	12,5
Skipper Lx	150	98-99	13
Vespa Et4	150	99-02	10
Vespa Lx	150	09-11	10
Vespa Lt 3V IE	150	14	15,6
Vespa Gts Super Ie 4T 3V	150	14-15	15,6
Vespa Primavera 4T-3V	150	13-15	15,6
Vespa S 4T ie	150	09-11	10
Vespa Sprint 4T 3V Ie	150	15	15,6

● Grammatura non originale | *Not original weight* ● Alte prestazioni | *High performances*



RULLI PULEGGE

ROLLER SETS

20 X 12 (mm)

GRAMMATURE DISPONIBILI - *WEIGHTS*					
Codice RMS *RMS Code*	●	●	**Codice a barre** *Barcode*	**N°**	**Gr.**
100400340				6	8,5
100400350				6	9
100400360				6	9,6
100400370				6	10,5
100400220				6	12
100400780				8	12,5
100400952	●			8	12,5
100400380				6	15,3
100400760				8	10
100400390				8	11,5
100400770				8	12
100400912 (52SE76320000)	●			6	13
100400400				8	13,5
100400040				8	14
100400410				8	15,3

Modello *Model*	**CC**	**Anno** *Year*	**Gr.**
APRILIA			
Leonardo	250	99-04	14
BENELLI			
Velvet	125	99-01	9
Velvet	150	99-01	9,6
Velvet	250	99-01	14
KYMCO			
Downtown I	200	10	12,5
People Gti	200	10-14	12,5
Downtown I	300	09-11	15,3
Downtown Abs - Abs i	300	10-12	15,3
K-Xct I Abs	300	14	15,3
K-Xct I Abs	300	12	15,3
People Gti	300	14	15,3
People Gti Abs	300	12-14	15,3
ITALJET			
Jupiter 4T	125		9
Millennium	125		9
Jet Set 4T- Millennium	150		9,6
MALAGUTI			
Madison	125	99-01	8,5
Phantom Max	125	03	9,6
Madison T	150	99-01	9,6
Madison S	250	99-01	13,5
MBK			
Doodo	125	00-01	10,5
Flame - R	125	97	12

Modello *Model*	**CC**	**Anno** *Year*	**Gr.**
Skyliner	125	98-02	8,5
Thunder	125	01-02	10,5
Skyliner	150	00-02	9,6
Skyliner	180	03	15,3
Skyliner	250	00-03	11,5
Skyliner Abs	250	03	11,5
Kilibre	300	03	15,3
YAMAHA			
Cygnus - Cygnus R	125	95-98	12
Hw Xenter	125	12-15	13
Majesty	125	98-00	8,5
Majesty	125	01-02	14
Majesty	125	03-05	10,5
Teo'S	125	00	10,5
X-City	125	08-11	10,5
X-Max	125	06-12	10,5
Xc R Majesty S	125	14	13
Yw Bwâ€™s	125	10	12
Yp R X-Max	125	10-14	10,5
Majesty	150	00-02	9,6
Hw Xenter	150	12	13
Versity	150	03-06	15,3
Majesty	180	03-06	15,3
Majesty	250	00-03	11,5
Majesty	250	96-98	14
X-City	250	08-12	12
X-Max	250	05-09	14
X-Max	250	08-10	12

● Grammatura non originale | *Not original weight* ● Alte prestazioni | *High performances*



20 X 15 (mm)

GRAMMATURE DISPONIBILI - *WEIGHTS*					
Codice RMS *RMS Code*	●	●	**Codice a barre** *Barcode*	**N°**	**Gr.**
100400420				6	7,3
100400430				6	11,5
100400440				6	12,5
100400170				6	13
100400110				6	13,5
100400902	●			6	14
100400120				6	14,5
100400450				6	15,5
100400460				6	16,5
100400962				6	18
100400992	●			6	19,2

Modello *Model*	**CC**	**Anno** *Year*	**Gr.**
APRILIA			
Scarabeo 4T	100	01-04	7,3
Scarabeo 4T Rst	100	06-09	7,3
Scarabeo 4T-Net	100	10-12	7,3
HONDA			
Chiocciola	125	00-06	11,5
Dylan	125	01-06	11,5
Nes	125	00-07	11,5
Sh 125 - 125I	125	01-12	11,5
Pcx	125	10-13	16,5
Pantheon	125	03-05	12,5
Ps	125	06-10	11,5
Chiocciola	150	00-06	12,5
Dylan	150	01-06	12,5
Nes	150	00-07	12,5
Sh 150 - 150I	150	01-08	12,5
Ps	150	06-10	12,5
Pcx	150	10-14	18
KYMCO			
B&W	125	00	13,5
Dink	125	97-98	13,5
Grand Dink	125	01-02	13,5
B&W	150	97-00	14,5

Modello *Model*	**CC**	**Anno** *Year*	**Gr.**
B&W Eu2	150	03-04	14,5
Dink Lx	150	98-00	14,5
Grand Dink Eu2	150	01-04	16,5
Dink Classic	200	04	16,5
MALAGUTI			
Blog Ie	125	09-11	11,5
Centro Ie	125	08-11	11,5
F18 Warrior	125	00-02	11,5
F18 Warrior	150	00-02	13,5
Blog Ie	160	09-11	11,5
Centro Ie	160	08-09	11,5
PIAGGIO			
Free	100	02-03	7,3
Vespa Lx Primavera 4T 3V Ie	125	13-15	19,2
Vespa Sprint 4T 3V Ie	125	14-15	19,2
SUZUKI			
Burgman K2-K6	125	02-06	13
Burgman K7-L1	125	07-11	13
Uc Epicuro X - K1	125	99-01	14
Burgman K2-K6	150	02-06	16,5
Epicuro	150	99-01	13
Ux Sixteen K8 - L0	150	08-10	14
Ux Sixteen L1	150	11	14

20 X 17 (mm)

GRAMMATURE DISPONIBILI - *WEIGHTS*					
Codice RMS *RMS Code*	●	●	**Codice a barre** *Barcode*	**N°**	**Gr.**
100400020				6	8,5
100400030				6	9,5
100400470				6	10
100400150				6	15

Modello *Model*	**CC**	**Anno** *Year*	**Gr.**
APRILIA			
Leonardo (I Serie)	125	99-01	8,5
Leonardo	150	99-01	9,5
Scarabeo Mot Rotax	200	99-03	10
GILERA			
Runner Fx-Fxr	180	97-02	15

Modello *Model*	**CC**	**Anno** *Year*	**Gr.**
ITALJET			
Dragster	180	99-03	15
PIAGGIO			
Hexagon Lx-Lxt	180	98-99	15
SUZUKI			
Sixteen	125	08-11	10
Sixteen	150	08-11	10

● Grammatura non originale | *Not original weight* ● Alte prestazioni | *High performances*



21 X 17 (mm)

GRAMMATURE DISPONIBILI - *WEIGHTS*

Codice RMS *RMS Code*	●	●	Codice a barre *Barcode*	N°	Gr.
100400310		●		6	9
100400320				6	10,3
100400322 (832698)	●			6	10,7
100400330		●		6	11
100400672 (842870)	●			6	11,2
100400842 (849480)	●			6	13,3

Modello *Model*	CC	Anno *Year*	Gr.
APRILIA			
Atlantic	125	03-05	11,2
Scarabeo	125	04-06	11,2
Scarabeo Light	125	09-11	11,2
Sport City Cube	125	08-10	11,2
Sr Max	125	11-12	11,2
Sport City	200	04-06	10,7
Sport City Cube	250	06-08	10,7
Sport City Cube	250	08-10	11,2
Sr Max	300	11-12	11,2
DERBI			
Gp1	250	06-07	11,2
Rambla	250	08-09	13,8
Rambla	300	10-12	13,8
GILERA			
Runner Vx-Vxr	200	02-04	10,7
Runner Vxr	200	05-11	10,7
Nexus Eu3	250	07	11,2
Nexus Eu3	250	06	13,8
Oregon	250	06-08	11,2
Nexus Eu3	300	08-12	11,2
PIAGGIO			
Beverly	125	01-03	10,7
Beverly Rst 4T 4V Eu3	125	10-12	11,2
Beverly Tourer Eu3	125	08-10	11,2
Carnaby	125	07-10	11,2
Mp3 Ibrido	125	09-10	11,2
Mp3 Ie Touring	125	11	11,2
Mp3 Yourban ERL	125	11-12	11,2
Vespa Granturismo	125	03-05	10,7
Vespa Gts 4T	125	07-11	11,2

Modello *Model*	CC	Anno *Year*	Gr.
X Evo	125	07-12	11,2
X7 Evo Ie Eu3	125	09-10	11,2
X10 4T 4V Ie Eu3	125	12	11,2
Hexagon Gtx	180	00	10,7
X9 Amalfi	180	00-03	10,7
Beverly	200	01-03	10,7
Carnaby	200	07-08	10,7
Liberty	200	06	10,7
Liberty 4T Eu3	200	07-08	10,7
Vespa Granturismo	200	03-07	10,7
X8	200	05-07	10,7
X9	200	02-03	10,7
Beverly	250	06-07	11,2
Beverly Tourer Eu3	250	08-09	13,8
Carnaby	250	08	13,8
Mp3	250	06-08	11,2
Vespa Gts- Abs	250	05-11	11,2
Vespa Gtv	250	06-09	11,2
X7 Eu3	250	08	11,2
X8 Eu3	250	05-08	11,2
X9 Evolution	250	04-06	11,2
Beverly 300 Ie Tourer	300	09-12	13,8
Carnaby Cruiser	300	09-11	13,8
Mp3 4T-Lt-Ibrido-Yourban	300	10-12	13,8
Mp3 Yourban ERL	300	11-15	13,3
Mp3 Lt Business - Sport Abs	300	14	13,3
Vespa Gts Super	300	08-12	13,8
Vespa Gts Ie & Touring	300	12-15	13,3
Vespa Gts Super Sport	300	10-13	13,3
Vespa Gtv 4T 4V ie	300	10-13	13,3
X7 Evo Ie Eu3	300	09-10	13,8

● Grammatura non originale | *Not original weight* ● Alte prestazioni | *High performances*



23 X 18 (mm)

GRAMMATURE DISPONIBILI - *WEIGHTS*					
Codice RMS *RMS Code*	●	●	**Codice a barre** *Barcode*	**N°**	**Gr.**
100400520		●		6	14
100400050				6	15,5
100400060				6	16
100400942 (R.0.122124)	●			6	17,5
100400700				6	18
100400530				6	19
100400540				6	20
100400580				3	20,8
				3	20,15
100400550		●		6	23
100400560				6	24
100400570				6	25
100400080				6	27

Modello *Model*	**CC**	**Anno** *Year*	**Gr.**
HONDA			
Pantheon 2T	125	98-02	15,5
Pantheon 2T	150	98-02	16
Foresight	250		27
Foresight	250	98	25
Jazz	250	00-04	20,8+ 20,15
Sh I	300	07-12	19
KYMCO			
B&W	250	00	20
B&W Eu2	250	03	20

Modello *Model*	**CC**	**Anno** *Year*	**Gr.**
Grand Dink	250	01-02	20
People S	250	06	20
People S 250I	250	07	20
X Citing	250	05	20
Yup	250	03	20
Gran Dink	300	12	20
People S I	300	08	17,5
X Citing I	300	08-09	17,5
X Citing I R	300	08	17,5
PIAGGIO			
X9	250	00-01	24

24 X 18 (mm)

GRAMMATURE DISPONIBILI - *WEIGHTS*					
Codice RMS *RMS Code*	●	●	**Codice a barre** *Barcode*	**N°**	**Gr.**
100400892 (21650-14F60-000)	●			6	21
100400070				6	23
100400680		●		6	25
100400180				6	31

Modello *Model*	**CC**	**Anno** *Year*	**Gr.**
HONDA			
Cn 4T	250		23
PIAGGIO			

Modello *Model*	**CC**	**Anno** *Year*	**Gr.**
Hexagon Gt-Gtx	250	98-00	23
SUZUKI			
Uh Burgman K7-L0	200	07-10	21
Uh Burgman L1	200	11-12	21
Uh Burgman L3	200	13	21
Burgman W-K2	250	98-02	31
Burgman K3-K6	250	03-06	31

25 X 15 (mm)

GRAMMATURE DISPONIBILI - *WEIGHTS*					
Codice RMS *RMS Code*	●	●	**Codice a barre** *Barcode*	**N°**	**Gr.**
100400660				8	15
100400872	●	●		8	16
100400862	●	●		8	17
100400832 (5RU176322000)	●			8	18
100400922 (5RU176325000)	●			8	20

Modello *Model*	**CC**	**Anno** *Year*	**Gr.**
YAMAHA			
Majesty	400	04-08	15
Majesty Abs	400	07-08	15
Majesty Abs	400	09-12	18

Modello *Model*	**CC**	**Anno** *Year*	**Gr.**
Yp X-Max	400	13-14	17
Xp T-Max	500	04-11	18
Xp T-Max	500	01-03	20
Xp T-Max Abs	530	12-13	18

● Grammatura non originale | *Not original weight* ● Alte prestazioni | *High performances*



RULLI PULEGGE

ROLLER SETS

25 X 17 (mm)

GRAMMATURE DISPONIBILI - *WEIGHTS*					
Codice RMS *RMS Code*	●	●	**Codice a barre** *Barcode*	**N°**	**Gr.**
100400642 (849914)	●			8	18,6
100400652 (830899)	●			8	21,4

Modello *Model*	**CC**	**Anno** *Year*	**Gr.**
APRILIA			
Atlantic Sprint	400	05-08	18,6
Scarabeo Light	400	06-08	18,6
Atlantic Sprint	500	05-08	21,4
Scarabeo Light	500	06-08	21,4
GILERA			
Fuoco	500	07-12	21,4
Nexus Eu3	500	06-09	21,4
Nexus Sp Eu3	500	06-07	21,4
PIAGGI			
Beverly Eu3	400	06-07	18,6
Beverly Tourer Eu3	400	08-10	18,6

Modello *Model*	**CC**	**Anno** *Year*	**Gr.**
Mp3	400	07-11	18,6
X Evo	400	07-09	18,6
X8 Eu3	400	06-08	18,6
Beverly	500	05-06	21,4
Beverly Cruiser	500	07-12	21,4
Beverly Eu3	500	06-08	21,4
Mp3 Lt-Rt	500	11-12	21,4
Mp3 Lt Sport - Business	500	11-13	21,4
Mp3 RL Sport - Business	500	11-12	21,4
X9 Evolution-Abs	500	06-07	21,4
X10 4T 4V Ie Eu3	500	12-14	21,4

25 X 20 (mm)

GRAMMATURE DISPONIBILI - *WEIGHTS*					
Codice RMS *RMS Code*	●	●	**Codice a barre** *Barcode*	**N°**	**Gr.**
100400742				6	17

Modello *Model*	**CC**	**Anno** *Year*	**Gr.**
KYMCO			
X Citing I Abs	400	14-15	17
X Citing I	400	13-15	17

25 X 22 (mm)

GRAMMATURE DISPONIBILI - *WEIGHTS*					
Codice RMS *RMS Code*	●	●	**Codice a barre** *Barcode*	**N°**	**Gr.**
100400630		●		6	26
100400480				6	27,3
100400490				6	28,5
100400500				6	29

Modello *Model*	**CC**	**Anno** *Year*	**Gr.**
APRILIA			
Atlantic	500	01-04	28,5
Scarabeo	500	03-06	28,5
GILERA			
Nexus	500	03-05	27,3

Modello *Model*	**CC**	**Anno** *Year*	**Gr.**
PIAGGIO			
Beverly	500	02-04	27,3
X9	500	01-02	29
X9 Evolution	500	03-05	27,3

26 X 13 (mm)

GRAMMATURE DISPONIBILI - *WEIGHTS*					
Codice RMS *RMS Code*	●	●	**Codice a barre** *Barcode*	**N°**	**Gr.**
100400610				8	17,5
100400620		●		8	19
100400190				8	21

Modello *Model*	**CC**	**Anno** *Year*	**Gr.**
MALAGUTI			
Madison K	400	02	17,5
Madison K Rst	400	02-04	17,5

Modello *Model*	**CC**	**Anno** *Year*	**Gr.**
SUZUKI			
Burgman X-K2	400	99-02	21
Burgman K3-L2	400	03-12	19

● Grammatura non originale | *Not original weight* ● Alte prestazioni | *High performances*



28 X 20 (mm)

GRAMMATURE DISPONIBILI - *WEIGHTS*					
Codice RMS *RMS Code*	●	●	**Codice a barre** *Barcode*	**N°**	**Gr.**
100400590		●		8	26
100400600				8	27

Modello *Model*	**CC**	**Anno** *Year*	**Gr.**
HONDA			
Silver Wing	600		27

29 X 22 (mm)

GRAMMATURE DISPONIBILI - *WEIGHTS*					
Codice RMS *RMS Code*	●	●	**Codice a barre** *Barcode*	**N°**	**Gr.**
100400732	●			6	33 ,5
100400752	●	●		6	31

Modello *Model*	**CC**	**Anno** *Year*	**Gr.**
KYMCO			
X Citing	500	05	33,5
X Citing 500 R	500	09	33,5
X Citing 500I	500	06-08	33,5

● Grammatura non originale | *Not original weight* ● Alte prestazioni | *High performances*



RULLI PULEGGE

ROLLER SETS

Modello *Model*	CC	Da *From*	A *To*	Codice RMS Standard *RMS Standard Code*	Codice RMS High Quality *RMS HQ Code*	Dimensioni (mm) *Dimensions (mm)*	Peso (gr) *Weight (gr)*	Numero pezzi *Pcs*
APRILIA								
Amico	50	1994	1995	**100410650**	-	15x12	6,5	6
Amico	50	1996	1998	**100410650**	-	15x12	6,5	6
Amico Lx-Sport	50	1992	1993	**100410650**	-	15x12	6,5	6
Area 51	50	1998	2000	**100410650**	-	15x12	6,5	6
Gulliver / Lc	50	1995	1998	**100410650**	-	15x12	6,5	6
Habana Kat	50	-	-	**100430750**	-	17x12	7,5	6
Mojito	50	2004	2008	**100450630**	**100450642**	19x15,5	6,4	6
Rally /Lc	50	1995	2003	**100410650**	-	15x12	6,5	6
Scarabeo	50	1993	1997	**100410650**	-	15x12	6,5	6
Scarabeo 2T Eu2 Piaggio	50	2010	2012	**100450750**	**100450752**	19x15,5	7,5	6
Scarabeo 2t Net	50	2009	2010	**100450750**	**100450752**	19x15,5	7,5	6
Scarabeo 4T 4V	50	2010	2012	**100450530**	**100450532**	19x15,5	5,3	6
Scarabeo 4T Net	50	2009	2010	**100450530**	**100450532**	19x15,5	5,3	6
Scarabeo 4T Rst Eu3	50	2006	2009	**100450530**	**100450532**	19x15,5	5,3	6
Scarabeo Quattro	50	2009	2009	**100450530**	**100450532**	19x15,5	5,3	6
Scarabeo Street	50	2005	2006	**100450750**	**100450752**	19x15,5	7,5	6
Scarabeo Street 2T Rst	50	2006	2009	**100450750**	**100450752**	19x15,5	7,5	6
Sonic	50	1998	2007	**100410650**	-	15x12	6,5	6
Sport City One 2T	50	2008	2011	**100450750**	**100450752**	19x15,5	7,5	6
Sport City One 4T	50	2008	2010	**100450630**	**100450642**	19x15,5	6,4	6
Sr (Cil.Orizz. Raff. Aria)	50	-	-	**100410520**	-	15x12	5,2	6
Sr (Mod.00 Mot Suzuki)	50	-	-	**100430750**	-	17x12	7,5	6
Sr / Lc	50	1994	1996	**100410650**	-	15x12	6,5	6
Sr Di Tech (Mod.01)	50	-	-	**100430750**	-	17x12	7,5	6
Sr R Factory Carb.	50	2010	2012	**100450630**	**100450642**	19x15,5	5,3	6
Sr R Factory ie	50	2010	2012	**100450530**	**100450532**	19x15,5	5,3	6
Sr R R Factory (Iniezione)	50	2004	2009	**100450530**	**100450532**	19x15,5	5,3	6
Sr R R Factory Carburatore - Carburetor)	50	2004	2009	**100450630**	**100450642**	19x15,5	6,4	6
Sr Stealth, Racing	50	1997	1999	**100410650**	-	15x12	6,5	6
Sr Street (Carburatore - Carburetor)	50	2003	2008	**100450630**	**100450642**	19x15,5	6,4	6
Sr Street (Iniezione)	50	2003	2008	**100450530**	**100450532**	19x15,5	5,3	6
Sr www	50	1997	2001	**100410650**	-	15x12	6,5	6
Scarabeo 4T	100	2001	2004	**100400420**	-	20x15	7,3	6
Scarabeo 4T / Net	100	2010	2012	**100400420**	-	20x15	7,3	6
Scarabeo 4T Rst	100	2006	2009	**100400420**	-	20x15	7,3	6
Scarabeo Motori Minarelli	100	2000	2000	**100410750**	-	15x12	7,5	6
Atlantic	125	2003	2005	-	**100400672**	21x17	11,2	6
Atlantic Eu3	125	2006	2008	**100400250**	**100400252**	19x17	7,3	6
Leonardo (I Serie)	125	1996	1998	**100400010**	-	18x15	10,7	6
Leonardo (I Serie)	125	1999	2001	**100400020**	-	20x17	8,5	6
Mojito	125	2003	2008	**100400260**	-	19x17	8	6
Mojito Retrò - Custom	125	1999	2001	**100400130**	-	19x14	12	6
Scarabeo	125	2004	2006	-	**100400672**	21x17	11,2	6
Scarabeo Light	125	2007	2009	**100400260**	-	19x17	8	6
Scarabeo Light	125	2009	2011	-	**100400672**	21x17	11,2	6
Sport City	125	2004	2006	**100400250**	**100400252**	19x17	7,3	6
Sport City Cube	125	2008	2010	**100400250**	**100400252**	19x17	7,3	6
Sport City Eu3	125	2006	2008	**100400250**	**100400252**	19x17	7,3	6
Sport City One	125	2008	2008	**100400260**	-	19x17	8	6
Sr	125	1999	2001	**100400300**	-	19x17	13	6
Sr Max	125	2011	2012	**100400250**	**100400252**	19x17	7,3	6
Sr Motard	125	2012	2012	**100400260**	-	19x17	8	6
Leonardo	150	1999	2001	**100400030**	-	20x17	9,5	6
Sr	150	1999	2001	**100400300**	-	19x17	13	6
Scarabeo Mot Rotax	200	1999	2003	**100400470**	-	20x17	10	6



Modello *Model*	CC	Da *From*	A *To*	Codice RMS Standard *RMS Standard Code*	Codice RMS High Quality *RMS HQ Code*	Dimensioni (mm) *Dimensions (mm)*	Peso (gr) *Weight (gr)*	Numero pezzi *Pcs*
Sport City	200	2004	2006	**100400320**	**100400322**	21x17	10,7	6
Sport City Cube	200	2008	2008	**100400320**	**100400322**	21x17	10,7	6
Sport City Eu3	200	2006	2008	**100400320**	**100400322**	21x17	10,7	6
Leonardo	250	1999	2004	**100400040**	-	20x12	14	8
Leonardo St	250	2001	2001	**100400040**	-	20x12	14	8
Sport City Cube	250	2006	2008	**100400320**	**100400322**	21x17	10,7	6
Sport City Cube	250	2008	2010	**100400250**	**100400252**	19x17	7,3	6
Sr Max	300	2011	2012	**100400250**	**100400252**	19x17	7,3	6
Atlantic Sprint	400	2005	2008	-	**100400642**	25x17	18,6	8
Scarabeo Light	400	2006	2008	-	**100400642**	25x17	18,6	8
Atlantic	500	2001	2004	**100400490**	-	25x22	28,5	6
Atlantic Sprint	500	2005	2008	-	**100400652**	25x17	21,4	8
Scarabeo	500	2003	2006	**100400490**	-	25x22	28,5	6
Scarabeo Light	500	2006	2008	-	**100400652**	25x17	21,4	8
ATALA								
Carosello	50	-	-	**100410700**	-	15x12	7	6
Hacker	50	-	-	**100430550**	-	17x12	5,5	6
BENELLI								
491 Gt	50	1998	1999	**100410650**	-	15x12	6,5	6
491 Rr	50	1998	2001	**100410550**	-	15x12	5,5	6
491 St	50	-	-	**100410550**	-	15x12	5,5	6
K2 Liquid Cooled	50	1999	2001	**100410650**	-	15x12	6,5	6
Naked	50	2002	2002	**100410650**	-	15x12	6,5	6
Pepe	50	1999	2001	**100410650**	-	15x12	6,5	6
Sport Racing	50	-	-	**100410650**	-	15x12	6,5	6
Adiva	125	2001	2002	**100400260**	-	19x17	8	6
Velvet	125	1999	2001	**100400350**	-	20x12	9	6
Velvet Touring	125	2002	2003	**100400350**	-	20x12	9	6
Velvet	150	1999	2001	**100400360**	-	20x12	9,6	6
Velvet Touring	150	2002	2003	**100400360**	-	20x12	9,6	6
Velvet	250	1999	2001	**100400040**	-	20x12	14	8
Velvet Touring	250	2002	2003	**100400040**	-	20x12	14	8
BETA								
Ark Air	50	1996	2008	**100410550**	-	15x12	5,5	6
Ark Lc	50	1996	2003	**100410550**	-	15x12	5,5	6
Elkon	50	1999	2003	**100410680**	-	15x12	6,8	6
Quadra Chrono 502	50	1996	1999	**100410550**	-	15x12	5,5	6
Tempo	50	1994	1995	**100410700**	-	15x12	7	6
CAGIVA								
City	50	1991	1994	**100410750**	-	15x12	7,5	6
Progress	50	1997	1999	**100430600**	-	17x12	6	6
DERBI								
Atlantis	50	1999	2001	**100430720**	-	17x12	7,2	6
Atlantis 02 Bullet	50	2003	2005	**100450630**	**100450642**	19x15,5	6,4	6
Atlantis 02 City	50	2003	2006	**100450630**	**100450642**	19x15,5	6,4	6
Atlantis 02 Red Bullet	50	2003	2003	**100450630**	**100450642**	19x15,5	6,4	6
Atlantis 02 Two Chic	50	2005	2005	**100450630**	**100450642**	19x15,5	6,4	6
Atlantis 2T Eu2	50	2007	2010	**100450630**	**100450642**	19x15,5	6,4	6
Atlantis 4T Eu2	50	2007	2007	**100450630**	**100450642**	19x15,5	6,4	6
Atlantis 50 4T	50	2004	2006	**100450630**	**100450642**	19x15,5	6,4	6
Atlantis Kat (Raffreddato Aria)	50	-	-	**100430580**	-	17x12	5,8	6
Atlantis Lc	50	1999	2001	**100430720**	-	17x12	7,2	6
Gp1	50	2001	2003	**100450530**	**100450532**	19x15,5	5,3	6
Gp1 Eu2	50	2005	2005	**100450530**	**100450532**	19x15,5	5,3	6
Gp1 Open Eu2	50	2006	2009	**100450630**	**100450642**	19x15,5	6,4	6
Gp1 Race Eu2	50	2005	2007	**100450630**	**100450642**	19x15,5	6,4	6
Hunter	50	1996	1997	**100430630**	-	17x12	6,3	6



RULLI PULEGGE

ROLLER SETS

Modello *Model*	**CC**	**Da** *From*	**A** *To*	**Codice RMS Standard** *RMS Standard Code*	**Codice RMS High Quality** *RMS HQ Code*	**Dimensioni (mm)** *Dimensions (mm)*	**Peso (gr)** *Weight (gr)*	**Numero pezzi** *Pcs*
Paddok Lc	50	1998	2001	**100430600**	-	17x12	6	6
Predator Lc	50	1998	2001	**100430720**	-	17x12	7,2	6
Boulevard	125	2002	2004	-	**100400692**	19x17	8,6	6
Boulevard Eu3	125	2004	2007	-	**100400692**	19x17	8,6	6
Boulevard 4T Eu3	125	2008	2012	**100400260**	-	19x17	8	6
Gp1 Eu2	125	2006	2006	**100400250**	**100400252**	19x17	7,3	6
Gp1 Low Seat 125 Eu3	125	2007	2008	**100400250**	**100400252**	19x17	7,3	6
Rambla	125	2008	2008	**100400250**	**100400252**	19x17	7,3	6
Sonar 4T	125	2009	2012	-	**100400692**	19x17	8,6	6
Variant Sport 4T Eu3	125	2012	2012	-	**100400692**	19x17	8,6	6
Boulevard	150	2002	2004	**100400270**	**100400272**	19x17	10	6
Boulevard Eu3	150	2004	2007	**100400270**	**100400272**	19x17	10	6
Gp1	250	2006	2007	-	**100400672**	21x17	11,2	6
Gp1 Low Seat 250 Eu3	250	2007	2008	-	**100400672**	21x17	11,2	6
Rambla	250	2008	2009	-	**100400842**	21x17	13,8	6
Rambla	300	2010	2012	-	**100400842**	21x17	13,8	6
GILERA								
Dna	50	2000	2002	**100450750**	**100450752**	19x15,5	7,5	6
Dna	50	2005	2007	**100450630**	**100450642**	19x15,5	6,4	6
Dna Gp Experience	50	2003	2004	**100450630**	**100450642**	19x15,5	6,4	6
Easy Moving	50	1995	1996	**100420850**	-	16x13	8,5	6
Ice	50	2001	2005	**100450750**	**100450752**	19x15,5	7,5	6
Runner	50	1997	2000	**100450530**	**100450532**	19x15,5	5,3	6
Runner Poggiali	50	2002	2002	**100450750**	**100450752**	19x15,5	7,5	6
Runner Purejet	50	2002	2007	**100450530**	**100450532**	19x15,5	5,3	6
Runner Purejet St	50	2008	2011	**100450530**	**100450532**	19x15,5	5,3	6
Runner Sp	50	2002	2004	**100450750**	**100450752**	19x15,5	7,5	6
Runner Sp	50	2005	2007	**100450630**	**100450642**	19x15,5	6,4	6
Runner Sp	50	2010	2012	**100450630**	**100450642**	19x15,5	6,4	6
Runner Sp Special Edition	50	2007	2007	**100450630**	**100450642**	19x15,5	6,4	6
Runner Sp St & Simoncelli	50	2008	2009	**100450630**	**100450642**	19x15,5	6,4	6
Stalker	50	1997	2011	**100450750**	**100450752**	19x15,5	7,5	6
Stalker Naked	50	2008	2008	**100450750**	**100450752**	19x15,5	7,5	6
Stalker Special Edition	50	2007	2008	**100450750**	**100450752**	19x15,5	7,5	6
Storm	50	1994	1995	**100420850**	-	16x13	8,5	6
Storm Eu2	50	2007	2007	**100450630**	**100450642**	19x15,5	6,4	6
Typhoon	50	1994	1997	**100420850**	-	16x13	8,5	6
Typhoon X	50	1998	1999	**100420850**	-	16x13	8,5	6
Typhoon Xr	50	2000	2000	**100450630**	**100450642**	19x15,5	6,4	6
Dna	125	2001	2001	**100400250**	**100400252**	19x17	7,3	6
Nexus Eu3 ie	125	2008	2009	**100400250**	**100400252**	19x17	7,3	6
Runner Fx-Fxr	125	1997	2002	**100400140**	-	19x17	15	6
Runner Vx	125	2005	2006	**100400250**	**100400252**	19x17	7,3	6
Runner Vx 4T Eu3	125	2007	2007	**100400250**	**100400252**	19x17	7,3	6
Runner Vx 4T St Eu3	125	2008	2009	**100400250**	**100400252**	19x17	7,3	6
Runner Vx Race	125	2006	2006	**100400250**	**100400252**	19x17	7,3	6
Runner Vx Sc	125	2006	2007	**100400250**	**100400252**	19x17	7,3	6
Runner Vx Vxr	125	2000	2001	**100400250**	**100400252**	19x17	7,3	6
Runner Vx-Vxr	125	2002	2004	**100400250**	**100400252**	19x17	7,3	6
Typhoon	125	1995	1998	**100400300**	-	19x17	13	6
Typhoon X-Xr	125	1999	2000	**100400300**	-	19x17	13	6
Runner Fx-Fxr	180	1997	2002	**100400150**	-	20x17	15	6
Runner Vxr	200	2005	2006	**100400320**	**100400322**	21x17	10,7	6
Runner Vxr 4T St Eu3	200	2008	2011	**100400320**	**100400322**	21x17	10,7	6
Runner Vxr Eu3	200	2007	2007	**100400320**	**100400322**	21x17	10,7	6
Runner Vxr Race	200	2006	2006	**100400320**	**100400322**	21x17	10,7	6
Runner Vx-Vxr	200	2002	2004	**100400320**	**100400322**	21x17	10,7	6



Modello *Model*	**CC**	**Da** *From*	**A** *To*	**Codice RMS Standard** *RMS Standard Code*	**Codice RMS High Quality** *RMS HQ Code*	**Dimensioni (mm)** *Dimensions (mm)*	**Peso (gr)** *Weight (gr)*	**Numero pezzi** *Pcs*
Nexus Eu3	250	2006	2006	**100400250**	**100400252**	19x17	7,3	6
Nexus Eu3	250	2007	2007	-	**100400672**	21x17	11,2	6
Nexus Sp Eu3	250	2006	2007	**100400250**	**100400252**	19x17	7,3	6
Oregon	250	2006	2008	-	**100400672**	21x17	11,2	6
Nexus Eu3	300	2008	2012	**100400250**	**100400252**	19x17	7,3	6
Fuoco	500	2007	2012	-	**100400652**	25x17	21,4	8
Nexus	500	2003	2005	**100400480**	-	25x22	27,3	6
Nexus Eu3	500	2006	2012	-	**100400652**	25x17	21,4	8
Nexus Sp Eu3	500	2006	2007	-	**100400652**	25x17	21,4	8
HONDA								
Gp Dio	50	1991	1991	**100420850**	-	16x13	8,5	6
Nps Zoomer	50	-	-	**100420550**	-	16x13	5,5	6
Sfx V	50	1995	1995	**100420900**	-	16x13	9	6
Sh	50	1996	1996	**100420900**	-	16x13	9	6
Shadow	50	-	-	**100420900**	-	16x13	9	6
Sj Bali	50	1993	1993	**100420850**	-	16x13	8,5	6
Sky	50	1997	1997	**100420500**	-	16x13	5	6
Vision Met-In	50	-	-	**100420850**	-	16x13	8,5	6
Vision Prima Serie	50	1985	1987	**100420750**	-	16x13	7,5	6
Sh	100	1996	1999	**100421000**	-	16x13	10	6
Sj Bali	100	1996	1999	**100421000**	-	16x13	10	6
Nsc Vision	110	-	-	**100400100**	-	18x14	14,5	6
Chiocciola	125	2000	2006	**100400430**	-	20x15	11,5	6
Dylan	125	2001	2006	**100400430**	-	20x15	11,5	6
Nes	125	2000	2007	**100400440**	-	20x15	12,5	6
Pantheon	125	2003	2005	**100400440**	-	20x15	12,5	6
Pantheon 2T	125	1998	2002	**100400050**	-	23x18	15,5	6
Pcx	125	2010	2013	**100400460**	-	20x15	16,5	6
Ps	125	2006	2010	**100400430**	-	20x15	11,5	6
Sh 125 / 125i	125	2001	2012	**100400430**	-	20x15	11,5	6
Chiocciola	150	2000	2006	**100400440**	-	20x15	12,5	6
Dylan	150	2001	2006	**100400440**	-	20x15	12,5	6
Nes	150	2000	2007	**100400440**	-	20x15	12,5	6
Pantheon 2T	150	1998	2002	**100400060**	-	23x18	16	6
Pcx	150	2010	2014	**100400962**	-	20x15	18	6
Ps	150	2006	2010	**100400440**	-	20x15	12,5	6
Sh 150 / 150i	150	2001	2008	**100400440**	-	20x15	12,5	6
Cn 4T	250	-	-	**100400070**	-	24x18	23	6
Foresight	250	1998	1998	**100400570**	-	23x18	25	6
Foresight	250	-	-	**100400080**	-	23x18	27	6
Jazz	250	2000	2004	**100400580**	-	23x18	29,8+20,15	6
Sh i	300	2007	2012	**100400530**	-	23x18	19	6
Silver Wing	600	-	-	**100400600**	-	28x20	27	8
ITALJET								
Bazooka	50	-	-	**100410650**	-	15x12	6,5	6
Formula Lc	50	1997	1997	**100430550**	-	17x12	5,5	6
Pista	50	-	-	**100410650**	-	15x12	6,5	6
Reporter	50	-	-	**100410650**	-	15x12	6,5	6
Dragster	125	1999	2003	**100400140**	-	19x17	14,5	6
Jet Set 4T	125	-	-	**100400260**	-	19x17	8	6
Jupiter 4T	125	-	-	**100400350**	-	20x12	9	6
Millennium	125	-	-	**100400350**	-	20x12	9	6
Torpedo	125	1998	2000	**100400130**	-	19x14	12	6
Torpedo (Mot Leader)	125	2000	2003	**100400260**	-	19x17	8	6
Jet Set 4T	150	-	-	**100400360**	-	20x12	9,6	6
Millennium	150	-	-	**100400360**	-	20x12	9,6	6
Dragster	180	1999	2003	**100400150**	-	20x17	15	6
Millennium	180	-	-	**100410750**	-	15x12	7,5	6



RULLI PULEGGE

ROLLER SETS

Modello *Model*	**CC**	**Da** *From*	**A** *To*	**Codice RMS Standard** *RMS Standard Code*	**Codice RMS High Quality** *RMS HQ Code*	**Dimensioni (mm)** *Dimensions (mm)*	**Peso (gr)** *Weight (gr)*	**Numero pezzi** *Pcs*
KYMCO								
Agility 2T R16	50	2010	2012	**100420850**	-	16x13	8,5	6
Agility 4T Carry	50	2011	2012	**100420650**	-	16x13	6,5	6
Agility 4T R10	50	2006	2006	**100420650**	-	16x13	6,5	6
Agility 4T R12	50	2007	2008	**100420650**	-	16x13	6,5	6
Agility 4T R16	50	2008	2012	**100420650**	-	16x13	6,5	6
Agility Plus 2T	50	2014	2014	**100420850**	-	16x13	8,5	6
Agility R12	50	2005	2005	**100420650**	-	16x13	6,5	6
Agility Rs	50	2009	2009	**100420650**	-	16x13	6,5	6
Agility RS Naked 2T	50	2010	2010	**100420850**	-	16x13	8,5	6
B&w	50	2002	2002	**100420850**	-	16x13	8,5	6
B&w Eu2	50	2003	2003	**100420850**	-	16x13	8,5	6
Cx	50	1993	1993	**100420850**	-	16x13	8,5	6
Cx Super	50	1994	1997	**100420850**	-	16x13	8,5	6
Dink 50 4T	50	2007	2007	**100420650**	-	16x13	6,5	6
Dink Classic Eu2	50	2003	2003	**100420850**	-	16x13	8,5	6
Dink Lc	50	1998	2002	**100420850**	-	16x13	8,5	6
Dj W	50	1994	2000	**100420850**	-	16x13	8,5	6
Dj X	50	1991	1992	**100420850**	-	16x13	8,5	6
Djy	50	1993	1993	**100420850**	-	16x13	8,5	6
Fever Zx	50	1999	2000	**100420850**	-	16x13	8,5	6
Fever Zx Eu2	50	2003	2004	**100420750**	-	16x13	7,5	6
Heroism	50	1995	1997	**100420750**	-	16x13	7,5	6
K12	50	1995	2000	**100420850**	-	16x13	8,5	6
Kb	50	1995	2000	**100420850**	-	16x13	8,5	6
Like 2T	50	2009	2009	**100420850**	-	16x13	8,5	6
Like 4T	50	2009	2009	**100420650**	-	16x13	6,5	6
Mxer	50	2002	2003	**100420750**	-	16x13	7,5	6
People	50	1999	2000	**100420850**	-	16x13	8,5	6
People	50	2004	2004	**100420850**	-	16x13	8,5	6
People Eu2	50	2003	2003	**100420850**	-	16x13	8,5	6
People Eu2	50	2008	2011	**100420850**	-	16x13	8,5	6
People S	50	2005	2008	**100420850**	-	16x13	8,5	6
People S 4T	50	2006	2008	**100420650**	-	16x13	6,5	6
Sento	50	2008	2008	**100420650**	-	16x13	6,5	6
Sniper	50	1993	1993	**100420750**	-	16x13	7,5	6
Sniper Dd	50	1994	1996	**100420750**	-	16x13	7,5	6
Super 8	50	2007	2007	**100420650**	-	16x13	6,5	6
Super 8 2T	50	2009	2009	**100420850**	-	16x13	8,5	6
Super 8 2T	50	2013	2013	**100420850**	-	16x13	8,5	6
Super 8 4T	50	2009	2009	**100420650**	-	16x13	6,5	6
Super 9	50	2000	2000	**100420850**	-	16x13	8,5	6
Super 9 Sport Eu2	50	2003	2004	**100420850**	-	16x13	8,5	6
Top Boy	50	1997	2000	**100420850**	-	16x13	8,5	6
Vitality 2T	50	2004	2004	**100420850**	-	16x13	8,5	6
Vitality 4T	50	2004	2004	**100420650**	-	16x13	6,5	6
Yup	50	2002	2002	**100420850**	-	16x13	8,5	6
Yup Eu2	50	2003	2003	**100420850**	-	16x13	8,5	6
Agility 4T	125	2006	2006	**100400230**	-	18x14	13,5	6
Agility 4T Eu3	125	2006	2008	**100400230**	-	18x14	13,5	6
Agility Carry	125	2011	2012	**100400230**	-	18x14	13,5	6
Agility Plus	125	2014	2014	**100400090**	-	18x14	13	6
Agility R16	125	2009	2012	**100400090**	-	18x14	13	6
Agility Rs	125	2009	2009	**100400230**	-	18x14	13,5	6
B&w	125	2000	2000	**100400110**	-	20x15	13,5	6
Dink	125	1997	1998	**100400110**	-	20x15	13,5	6
Dink Classic	125	2002	2002	**100400110**	-	20x15	13,5	6
Dink Classic Eu2	125	2003	2003	**100400110**	-	20x15	13,5	6



Modello *Model*	**CC**	**Da** *From*	**A** *To*	**Codice RMS Standard** *RMS Standard Code*	**Codice RMS High Quality** *RMS HQ Code*	**Dimensioni (mm)** *Dimensions (mm)*	**Peso (gr)** *Weight (gr)*	**Numero pezzi** *Pcs*
Dink Lx	125	1998	2000	**100400110**	-	20x15	13,5	6
Downtown 125 i	125	2009	2009	**100400090**	-	18x14	13	6
Grand Dink	125	2001	2002	**100400110**	-	20x15	13,5	6
Grand Dink Eu2	125	2003	2004	**100400110**	-	20x15	13,5	6
Heroism	125	1995	1997	**100400090**	-	18x14	13	6
K-Xct i	125	2012	2014	**100400090**	-	18x14	13	6
Like	125	2009	2009	**100400230**	-	18x14	13,5	6
Like Lx	125	2012	2012	**100400230**	-	18x14	13,5	6
Movie	125	1999	2000	**100400090**	-	18x14	13	6
Movie 125 Eu3	125	2006	2007	**100400230**	-	18x14	13,5	6
Movie Xl	125	2001	2001	**100400230**	-	18x14	13,5	6
Movie Xl Eu2	125	2003	2004	**100400230**	-	18x14	13,5	6
People	125	1999	2000	**100400090**	-	18x14	13	6
People Eu2	125	2003	2003	**100400090**	-	18x14	13	6
People Eu3	125	2007	2011	**100400090**	-	18x14	13	6
People Gti	125	2010	2010	**100400090**	-	18x14	13	6
People One i	125	2013	2014	**100400230**	-	18x14	13,5	6
People S	125	2005	2005	**100400090**	-	18x14	13	6
People S Dd Eu3	125	2007	2008	**100400090**	-	18x14	13	6
Super 8	125	2008	2009	**100400090**	-	18x14	13	6
Vivio	125	2000	2000	**100400090**	-	18x14	13	6
Agility R16	150	2008	2009	**100400090**	-	18x14	13	6
B&w	150	1997	2000	**100400120**	-	20x15	14,5	6
B&w Eu2	150	2003	2004	**100400120**	-	20x15	14,5	6
Dink Classic	150	2002	2002	**100400120**	-	20x15	14,5	6
Dink Classic Eu2	150	2003	2003	**100400120**	-	20x15	14,5	6
Dink Lx	150	1998	2000	**100400120**	-	20x15	14,5	6
Grand Dink Eu2	150	2001	2002	**100400460**	-	20x15	16,5	6
Grand Dink Eu2	150	2003	2004	**100400460**	-	20x15	16,5	6
Heroism	150	1995	1997	**100400100**	-	18x14	14,5	6
Movie 150 Eu3	150	2006	2007	**100400240**	-	18x14	15,5	6
Movie Xl	150	2001	2001	**100400240**	-	18x14	15,5	6
Movie Xl Eu2	150	2003	2004	**100400240**	-	18x14	15,5	6
People	150	1999	2000	**100400100**	-	18x14	14,5	6
People 0 Eu2	150	2003	2003	**100400100**	-	18x14	14,5	6
Vivio	150	2000	2000	**100400100**	-	18x14	14,5	6
Agility 200 R16	200	2010	2012	**100400230**	-	18x14	13,5	6
Agility i Plus	200	2014	2014	**100400090**	-	18x14	13	6
Agility Plus	200	2014	2014	**100400230**	-	18x14	13,5	6
Dink Classic	200	2004	2004	**100400460**	-	20x15	16,5	6
Like 200I	200	2009	2009	**100400230**	-	18x14	13,5	6
Like Lx	200	2012	2012	**100400230**	-	18x14	13,5	6
People S	200	2005	2005	**100400090**	-	18x14	13	6
People S i	200	2007	2007	**100400090**	-	18x14	13	6
B&w	250	2000	2000	**100400540**	-	23x18	20	6
B&w Eu2	250	2003	2003	**100400540**	-	23x18	20	6
Grand Dink	250	2001	2002	**100400540**	-	23x18	20	6
Grand Dink Eu2	250	2003	2004	**100400540**	-	23x18	20	6
People Lc	250	2003	2004	**100400540**	-	23x18	20	6
People S	250	2006	2006	**100400540**	-	23x18	20	6
People S 250i	250	2007	2007	**100400540**	-	23x18	20	6
X Citing	250	2005	2005	**100400540**	-	23x18	20	6
X Citing i	250	2006	2007	**100400540**	-	23x18	20	6
Yup	250	2003	2003	**100400540**	-	23x18	20	6
Downtown Abs i	300	2010	2012	**100400410**	-	20x12	15,3	8
Downtown-Downtown i	300	2009	2011	**100400410**	-	20x12	15,3	8
Gran Dink	300	2012	2012	**100400540**	-	23x18	20	6
K-Xct i	300	2012	2012	**100400410**	-	20x12	15,3	8



RULLI PULEGGE

ROLLER SETS

Modello *Model*	**CC**	**Da** *From*	**A** *To*	**Codice RMS Standard** *RMS Standard Code*	**Codice RMS High Quality** *RMS HQ Code*	**Dimensioni (mm)** *Dimensions (mm)*	**Peso (gr)** *Weight (gr)*	**Numero pezzi** *Pcs*
K-Xct i Abs	300	2014	2014	**100400410**	-	20x12	15,3	8
People Gti	300	2011	2014	**100400410**	-	20x12	15,3	8
People Gti Abs	300	2012	2014	**100400410**	-	20x12	15,3	8
People S i	300	2008	2008	-	**100400942**	23x17,5	17,5	6
X Citing i	300	2008	2008	-	**100400942**	23x17,5	17,5	6
X Citing i R	300	2008	2009	-	**100400942**	23x17,5	17,5	6
X Citing i	400	2013	2015	-	**100400742**	25x20	17	6
X Citing i ABS	400	2013	2015	-	**100400742**	25x20	17	6
X Citing	500	2005	2005	-	**100400732**	29x22	33,5	6
X Citing 500 R	500	2009	2009	-	**100400732**	29x22	33,5	6
X Citing 500i	500	2006	2008	-	**100400732**	29x22	33,5	6
X Citing 500i R	500	2007	2008	-	**100400732**	29x22	33,5	6
MALAGUTI								
Centro Base	50	1993	1994	**100410700**	-	15x12	7	6
Centro SI	50	1994	1998	**100410700**	-	15x12	7	6
Centro SI Kat	50	1999	2000	**100410700**	-	15x12	7	6
Crosser Cr1	50	1995	1998	**100410550**	-	15x12	5,5	6
F10 Jet Line	50	1992	1998	**100410650**	-	15x12	6,5	6
F10 Kat	50	1999	2000	**100410650**	-	15x12	6,5	6
F10 Rst Eu1	50	2001	2002	**100410650**	-	15x12	6,5	6
F10 Rst Eu2	50	2002	2006	**100410650**	-	15x12	6,5	6
F12 Aria Rst Eu2	50	2006	2006	**100410650**	-	15x12	6,5	6
F12 Phantom	50	1994	1998	**100410650**	-	15x12	6,5	6
F12 Phantom Eu1	50	1999	2000	**100410650**	-	15x12	6,5	6
F12 Phantom Lc	50	1994	1998	**100410650**	-	15x12	6,5	6
F12 Phantom Lc Rst Eu1	50	2001	2002	**100410650**	-	15x12	6,5	6
F12 Phantom Lc Rst Eu2	50	2002	2002	**100410650**	-	15x12	6,5	6
F15 Fire Fox Air Cooled	50	2005	2006	**100410650**	-	15x12	6,5	6
Yesterday / Euro	50	1997	2000	**100410650**	-	15x12	6,5	6
Ciak	100	1999	2000	**100430660**	-	17x12	6,6	6
Blog ie	125	2009	2011	**100400430**	-	20x15	11,5	6
Centro ie	125	2008	2009	**100400430**	-	20x15	11,5	6
CentroSlie	125	2009	2011	**100400430**	-	20x15	11,5	6
Ciak	125	2000	2001	**100400090**	-	18x14	13	6
Ciak Master	125	2004	2004	**100400090**	-	18x14	13	6
Ciak Master Eu3	125	2006	2006	**100400090**	-	18x14	13	6
Ciak Rst Eu2	125	2003	2003	**100400090**	-	18x14	13	6
F18 Warrior	125	2000	2002	**100400430**	-	20x15	11,5	6
Madison	125	1999	2001	**100400340**	-	20x12	8,5	6
Madison R Rst	125	2002	2002	**100400340**	-	20x12	8,5	6
Madison R Rst Eu2	125	2003	2004	**100400360**	-	20x12	9,6	6
Phantom Max	125	2003	2003	**100400360**	-	20x12	9,6	6
Ciak	150	2000	2002	**100400100**	-	18x14	14,5	6
Ciak Master	150	2004	2004	**100400100**	-	18x14	14,5	6
Ciak Rst Eu2	150	2003	2003	**100400100**	-	18x14	14,5	6
F18 Warrior	150	2000	2002	**100400110**	-	20x15	13,5	6
Madison T	150	1999	2001	**100400360**	-	20x12	9,6	6
Blog ie	160	2009	2011	**100400430**	-	20x15	11,5	6
Centro ie	160	2008	2009	**100400430**	-	20x15	11,5	6
Ciak Master Eu2	200	2006	2006	**100400090**	-	18x14	13	6
Madison S	250	1999	2001	**100400400**	-	20x12	13,5	8
Madison K	400	2002	2002	**100400610**	-	26x13	17,5	8
Madison K Rst	400	2002	2004	**100400610**	-	26x13	17,5	8
MBK								
Booster	50	1992	1994	**100410650**	-	15x12	6,5	6
Booster	50	2001	2002	**100410620**	-	15x12	6,2	6
Booster Naked	50	2003	2003	**100410620**	-	15x12	6,2	6
Booster Ng	50	1995	1998	**100410700**	-	15x12	7	6



Modello *Model*	CC	Da *From*	A *To*	Codice RMS Standard *RMS Standard Code*	Codice RMS High Quality *RMS HQ Code*	Dimensioni (mm) *Dimensions (mm)*	Peso (gr) *Weight (gr)*	Numero pezzi *Pcs*
Booster Ng	50	1999	1999	**100410650**	-	15x12	6,5	6
Booster Ng	50	2001	2003	**100410620**	-	15x12	6,2	6
Booster Ng Eu1	50	1999	2000	**100410650**	-	15x12	6,5	6
Booster Road (Ita)	50	1994	1995	**100410650**	-	15x12	6,5	6
Booster Spirit	50	1996	1998	**100410700**	-	15x12	7	6
Booster Spirit	50	1999	2000	**100410650**	-	15x12	6,5	6
Booster Spirit	50	2003	2003	**100410620**	-	15x12	6,2	6
Booster Spirit Eu2	50	2002	2002	**100410620**	-	15x12	6,2	6
Booster Spirit Eu2	50	2002	2003	**100410620**	-	15x12	6,2	6
Booster Track	50	1996	1998	**100410700**	-	15x12	7	6
Evolis	50	1994	1995	**100410700**	-	15x12	7	6
Fizz	50	1994	1995	**100410700**	-	15x12	7	6
Flipper	50	1998	2002	**100410650**	-	15x12	6,5	6
Flipper Catalitico	50	1999	2000	**100410650**	-	15x12	6,5	6
Flipper Eu2	50	2003	2004	**100410650**	-	15x12	6,5	6
Forte (Che-Ita)	50	1994	1996	**100410650**	-	15x12	6,5	6
Mach G Eu1	50	2002	2003	**100410650**	-	15x12	6,5	6
Mach G Eu2	50	2002	2004	**100410650**	-	15x12	6,5	6
Nitro	50	1997	2004	**100410550**	-	15x12	5,5	6
Nitro Eu2	50	2003	2003	**100410550**	-	15x12	5,5	6
Nitro Jaguar	50	2004	2004	**100410550**	-	15x12	5,5	6
Ovetto (Che-Ita)	50	1997	2001	**100410650**	-	15x12	6,5	6
Ovetto Eu1	50	2002	2004	**100410650**	-	15x12	6,5	6
Ovetto Eu2	50	2002	2003	**100410650**	-	15x12	6,5	6
Sorriso	50	1991	1992	**100410650**	-	15x12	6,5	6
Sorriso	50	1993	1995	**100410650**	-	15x12	6,5	6
Stunt	50	2000	2002	**100410620**	-	15x12	6,2	6
Booster	100	1999	2001	**100410830**	-	15x12	8,3	6
Nitro	100	2000	2002	**100410900**	-	15x12	9	6
Ovetto	100	2000	2002	**100410900**	-	15x12	9	6
Doodo	125	2001	2002	**100400370**	-	20x12	10,5	6
Flame / R	125	1995	1999	**100400390**	-	20x12	12	6
Flame F	125	2000	2000	**100400370**	-	20x12	10,5	6
Flame R	125	1996	1999	**100400370**	-	20x12	10,5	6
Skyliner	125	1998	2002	**100400340**	-	20x12	8,5	6
Skyliner	125	2001	2002	**100400370**	-	20x12	10,5	6
Thunder	125	2001	2002	**100400370**	-	20x12	10,5	6
Skyliner	150	2001	2002	**100400370**	-	20x12	10,5	6
Thunder	150	2001	2002	**100400370**	-	20x12	10,5	6
Skyliner	180	2003	2003	**100400410**	-	20x12	15,3	8
Skyliner	250	2000	2003	**100400390**	-	20x12	11,5	8
Skyliner Abs	250	2003	2003	**100400390**	-	20x12	11,5	8
Kilibre	300	2003	2003	**100400410**	-	20x12	15,3	8
PEUGEOT								
Buxy	50	1994	1997	**100420900**	-	16x13	9	6
Elyseo	50	1999	1999	**100420900**	-	16x13	9	6
Looxor	50	2001	2003	**100420900**	-	16x13	9	6
Metal-X	50	2002	2002	**100420900**	-	16x13	9	6
Speedake (Keihin)	50	1995	1997	**100420750**	-	16x13	7,5	6
Speedake (Mikuni)	50	1995	1997	**100420900**	-	16x13	9	6
Speedfight AC Cat	50	1999	1999	**100420900**	-	16x13	9	6
Speedfight AC-LC	50	1997	1998	**100420900**	-	16x13	9	6
Squab	50	1995	1997	**100420900**	-	16x13	9	6
St Rapido	50	1985	1993	**100420750**	-	16x13	7,5	6
Sv Geo	50	1991	1995	**100421100**	-	16x13	11	6
Sv Geo (Mod.'94)	50	1991	1995	**100420850**	-	16x13	8,5	6
Trekker	50	1998	2000	**100420900**	-	16x13	9	6
Vivacity	50	1999	1999	**100420900**	-	16x13	9	6



RULLI PULEGGE

ROLLER SETS

Modello *Model*	**CC**	**Da** *From*	**A** *To*	**Codice RMS Standard** *RMS Standard Code*	**Codice RMS High Quality** *RMS HQ Code*	**Dimensioni (mm)** *Dimensions (mm)*	**Peso (gr)** *Weight (gr)*	**Numero pezzi** *Pcs*
Vivacity Catalitico	50	1999	2002	**100420900**	-	16x13	9	6
Vivacity Vsx-Xr	50	2002	2004	**100420900**	-	16x13	9	6
X-Fight	50	2000	2000	**100420900**	-	16x13	9	6
Xrace	50	2003	2003	**100420900**	-	16x13	9	6
Zenith L	50	1994	1996	**100420850**	-	16x13	8,5	6
PGO								
Big Max	50	-	-	**100420850**	-	16x13	8,5	6
PIAGGIO								
Diesis	50	2001	2001	**100450630**	**100450642**	19x15,5	6,4	6
Fly 2T	50	2005	2007	**100450750**	**100450752**	19x15,5	7,5	6
Fly 2T	50	2010	2011	**100450750**	**100450752**	19x15,5	7,5	6
Fly 4T	50	2008	2008	**100450630**	**100450642**	19x15,5	6,4	6
Fly 4T	50	2008	2011	-	**100450982**	19x15,5	9,8	6
Fly 4T	50	2012	2012	**100450530**	**100450532**	19x15,5	5,3	6
Fly 4T 4V	50	2012	2013	**100450530**	**100450532**	19x15,5	5,3	6
Fly 4T Mot Chn	50	2006	2007	**100450630**	**100450642**	19x15,5	6,4	6
Free	50	1992	1994	**100420850**	-	16x13	8,5	6
Free Delivery	50	2000	2001	**100450630**	**100450642**	19x15,5	6,4	6
Free FI	50	1995	2002	**100420850**	-	16x13	8,5	6
Liberty	50	1997	2005	**100450630**	**100450642**	19x15,5	6,4	6
Liberty (Cat.'00)	50	1997	2005	**100450750**	**100450752**	19x15,5	7,5	6
Liberty 2T	50	2006	2008	**100450750**	**100450752**	19x15,5	7,5	6
Liberty 2T Rst	50	2004	2004	**100450750**	**100450752**	19x15,5	7,5	6
Liberty 2T Sport	50	2006	2008	**100450750**	**100450752**	19x15,5	7,5	6
Liberty 4T	50	2000	2002	**100450530**	**100450532**	19x15,5	5,3	6
Liberty 4T	50	2005	2008	**100450750**	**100450752**	19x15,5	7,5	6
Liberty 4T Delivery	50	2010	2011	**100450750**	**100450752**	19x15,5	7,5	6
Liberty 4T Moc & Elle	50	2009	2011	**100450630**	**100450642**	19x15,5	6,4	6
Liberty 4T PTT	50	2009	2011	**100450750**	**100450752**	19x15,5	7,5	6
Liberty 4T Rst	50	2004	2004	**100450630**	**100450642**	19x15,5	6,4	6
Liberty 4T Sport	50	2007	2008	**100450750**	**100450752**	19x15,5	7,5	6
Liberty Moc 2T	50	2009	2011	**100450750**	**100450752**	19x15,5	7,5	6
Liberty Ptt Eu2	50	2004	2005	**100450750**	**100450752**	19x15,5	7,5	6
Nrg	50	1994	1996	**100420850**	-	16x13	8,5	6
Nrg Extreme	50	1999	2000	**100450630**	**100450642**	19x15,5	6,4	6
Nrg Mc3	50	2001	2004	**100450750**	**100450752**	19x15,5	7,5	6
Nrg Mc3 Acqua	50	2001	2001	**100450480**	-	19x15,5	4,8	6
Nrg Power Dd	50	2005	2006	**100450630**	**100450642**	19x15,5	6,4	6
Nrg Power Dd Spec	50	2007	2008	**100450630**	**100450642**	19x15,5	6,4	6
Nrg Power Dt	50	2006	2011	**100450630**	**100450642**	19x15,5	6,4	6
Nrg Power Purejet	50	2004	2006	**100450530**	**100450532**	19x15,5	5,3	6
Nrg Power Purejet	50	2010	2011	**100450530**	**100450532**	19x15,5	5,3	6
Nrg Purejet	50	2002	2004	**100450530**	**100450532**	19x15,5	5,3	6
Nrg Purejet	50	2010	2010	**100450530**	**100450532**	19x15,5	5,3	6
Nrg Rst Mc2 (96-97)	50	1996	1998	**100420700**	-	16x13	7	6
Nrg Rst Mc2 (98)	50	1996	1998	**100450530**	**100450532**	19x15,5	5,3	6
Ntt	50	1995	1996	**100420850**	-	16x13	8,5	6
Quartz	50	1992	1996	**100420850**	-	16x13	8,5	6
Sfera	50	1991	1993	**100440520**	-	17x13,5	5,2	6
Sfera Maquillage 2	50	1994	1994	**100420850**	-	16x13	8,5	6
Sfera Rst	50	1995	1997	**100420850**	-	16x13	8,5	6
Typhoon	50	2001	2009	**100450630**	**100450642**	19x15,5	6,4	6
Typhoon 2T E3 Ch	50	2011	2011	**100450750**	**100450752**	19x15,5	7,5	6
Typhoon 2T E2	50	2010	2012	**100450750**	**100450752**	19x15,5	7,5	6
Vespa Et2	50	1997	2005	**100450630**	**100450642**	19x15,5	6,4	6
Vespa Et2 Iniezione	50	1997	2000	**100450750**	**100450752**	19x15,5	7,5	6
Vespa Et4	50	2000	2005	**100450530**	**100450532**	19x15,5	5,3	6
Vespa Lx 2T	50	2005	2008	**100450750**	**100450752**	19x15,5	7,5	6



Modello *Model*	**CC**	**Da** *From*	**A** *To*	**Codice RMS Standard** *RMS Standard Code*	**Codice RMS High Quality** *RMS HQ Code*	**Dimensioni (mm)** *Dimensions (mm)*	**Peso (gr)** *Weight (gr)*	**Numero pezzi** *Pcs*
Vespa Lx 2T FI	50	2009	2010	**100450750**	**100450752**	19x15,5	7,5	6
Vespa Lx 2T Touring	50	2010	2011	**100450750**	**100450752**	19x15,5	7,5	6
Vespa Lx 4T-4V	50	2009	2013	**100450530**	**100450532**	19x15,5	5,3	6
Vespa Lx 4T-4V touring	50	2010	2013	**100450530**	**100450532**	19x15,5	5,3	6
Vespa Lxv 2T	50	2006	2008	**100450750**	**100450752**	19x15,5	7,5	6
Vespa Lxv 2T Navy	50	2008	2008	**100450750**	**100450752**	19x15,5	7,5	6
Vespa Primavera	50	2013	2015	**100450530**	**100450532**	19x15,5	5,3	6
Vespa S 2T	50	2007	2011	**100450750**	**100450752**	19x15,5	7,5	6
Vespa S 4T-4V	50	2008	2011	**100450530**	**100450532**	19x15,5	5,3	6
Vespa S 4T-4V & College	50	2013	2015	**100450530**	**100450532**	19x15,5	5,3	6
Vespa Sprint 4T-4V	50	2014	2014	**100450530**	**100450532**	19x15,5	5,3	6
Zip	50	1992	1993	**100440520**	-	17x13,5	5,2	6
Zip	50	2000	2004	**100450750**	**100450752**	19x15,5	7,5	6
Zip 2T	50	2008	2011	**100450750**	**100450752**	19x15,5	7,5	6
Zip 4T	50	2000	2012	**100450630**	**100450642**	19x15,5	6,4	6
Zip Bimodale	50	1994	1997	**100420850**	-	16x13	8,5	6
Zip Fast Raider	50	1996	1997	**100420850**	-	16x13	8,5	6
Zip Fast Raider Rst	50	1996	1997	**100420850**	-	16x13	8,5	6
Zip Rst	50	1995	1996	**100420850**	-	16x13	8,5	6
Zip Rst	50	1996	1999	**100420850**	-	16x13	8,5	6
Zip Sp	50	1996	2000	**100420700**	-	16x13	7	6
Zip Sp	50	2001	2004	**100450630**	**100450642**	19x15,5	6,4	6
Zip Sp Eu2	50	2006	2012	**100450630**	**100450642**	19x15,5	6,4	6
Free	100	2002	2003	**100400420**	-	20x15	7,3	6
Zip 4T	100	2006	2010	-	**100450982**	19x15,5	9,8	6
Beverly	125	2001	2003	**100400320**	**100400322**	21x17	10,7	6
Beverly	125	2001	2003	-	**100400692**	19x17	8,6	6
Beverly Eu3	125	2007	2008	**100400250**	**100400252**	19x17	7,3	6
Beverly Eu3 Mic	125	2007	2007	**100400250**	**100400252**	19x17	7,3	6
Beverly Eu3 Sport	125	2007	2008	**100400250**	**100400252**	19x17	7,3	6
Beverly Rst	125	2004	2007	**100400250**	**100400252**	19x17	7,3	6
Beverly Rst 4T 4V ie Eu3	125	2010	2012	**100400250**	**100400252**	19x17	7,3	6
Beverly Tourer Eu3	125	2008	2010	**100400250**	**100400252**	19x17	7,3	6
Carnaby	125	2007	2010	**100400250**	**100400252**	19x17	7,3	6
Fly	125	2005	2007	**100400260**	-	19x17	8	6
Fly 4T 3V ie E3 Dt	125	2013	2015	-	**100400972**	19x17	10,4	6
Fly 4T 3V ie Eu3 Lem	125	2012	2013	-	**100400972**	19x17	10,4	6
Fly Eu3	125	2007	2008	-	**100400692**	19x17	8,6	6
Hexagon	125	1994	1997	**100400300**	-	19x17	13	6
Hexagon Gtx	125	2000	2000	**100400250**	**100400252**	19x17	7,3	6
Hexagon Lx4	125	1998	1999	**100400130**	-	19x14	12	6
Hexagon Lx-Lxt	125	1998	1999	**100400140**	-	19x17	14,5	6
Liberty	125	1998	2000	**100400130**	-	19x14	12	6
Liberty	125	2001	2002	-	**100400692**	19x17	8,6	6
Liberty 4T	125	2006	2007	-	**100400692**	19x17	8,6	6
Liberty 4T Eu3	125	2007	2008	-	**100400692**	19x17	8,6	6
Liberty 4T Eu3 Delivery	125	2008	2008	-	**100400692**	19x17	8,6	6
Liberty 4T Sport Eu3	125	2006	2008	-	**100400692**	19x17	8,6	6
Liberty Moc 4T & Elle	125	2009	2012	-	**100400692**	19x17	8,6	6
Liberty Rst	125	2004	2005	-	**100400692**	19x17	8,6	6
Liberty Rst Ptt	125	2005	2011	-	**100400692**	19x17	8,6	6
Liberty Sport	125	2006	2006	-	**100400692**	19x17	8,6	6
Mp3	125	2007	2008	**100400250**	**100400252**	19x17	7,3	6
Mp3 Ibrido	125	2009	2010	**100400250**	**100400252**	19x17	7,3	6
Mp3 ie	125	2008	2009	**100400250**	**100400252**	19x17	7,3	6
Mp3 ie Touring	125	2011	2011	**100400250**	**100400252**	19x17	7,3	6
Mp3 Yourban Erl	125	2011	2012	**100400250**	**100400252**	19x17	7,3	6



RULLI PULEGGE

ROLLER SETS

Modello *Model*	**CC**	**Da** *From*	**A** *To*	**Codice RMS Standard** *RMS Standard Code*	**Codice RMS High Quality** *RMS HQ Code*	**Dimensioni (mm)** *Dimensions (mm)*	**Peso (gr)** *Weight (gr)*	**Numero pezzi** *Pcs*
Sfera	125	1995	1997	**100400130**	-	19x14	12	6
Skipper	125	1994	1997	**100400160**	-	19x17	12,5	6
Skipper 4T	125	2000	2002	-	**100400692**	19x17	8,6	6
Skipper Lx	125	1998	1999	**100400300**	-	19x17	13	6
Super Hexagon Gtx 12"	125	2001	2002	**100400250**	**100400252**	19x17	7,3	6
Typhoon 4T 2V E3	125	2010	2011	-	**100400692**	19x17	8,6	6
Vespa 946 4T 3V Abs	125	2013	2015	-	**100400972**	19x17	10,4	6
Vespa Et4	125	1996	1998	**100400130**	-	19x14	12	6
Vespa Et4	125	1999	2002	-	**100400692**	19x17	8,6	6
Vespa Granturismo	125	2003	2005	**100400320**	**100400322**	21x17	10,7	6
Vespa Granturismo Eu3	125	2006	2007	**100400250**	**100400252**	19x17	7,3	6
Vespa Gts 4T ie Super	125	2009	2012	**100400250**	**100400252**	19x17	7,3	6
Vespa Gts Eu3	125	2007	2011	**100400250**	**100400252**	19x17	7,3	6
Vespa Gtv	125	2007	2008	**100400250**	**100400252**	19x17	7,3	6
Vespa Gtv 4T Navy Eu3	125	2008	2008	**100400250**	**100400252**	19x17	7,3	6
Vespa Lx	125	2005	2006	-	**100400692**	19x17	8,6	6
Vespa Lx 4T 3V ie - Touring	125	2012	2013	-	**100400972**	19x17	10,4	6
Vespa Lx 4T Eu3 Touring	125	2010	2011	-	**100400692**	19x17	8,6	6
Vespa Lx 4T FI	125	2009	2009	-	**100400692**	19x17	8,6	6
Vespa Lx Eu3	125	2006	2008	-	**100400692**	19x17	8,6	6
Vespa Lx Primavera 4T 3V ie	125	2013	2015	-	**100400992**	20x15	19,2	6
Vespa Lxv 4T Eu3	125	2006	2009	-	**100400692**	19x17	8,6	6
Vespa Lxv 4T Navy Eu3	125	2008	2008	-	**100400692**	19x17	8,6	6
Vespa Lxv ie 4T	125	2010	2012	-	**100400692**	19x17	8,6	6
Vespa S 4T 3V ie	125	2012	2012	-	**100400972**	19x17	10,4	6
Vespa S 4T Eu3	125	2007	2008	-	**100400692**	19x17	8,6	6
Vespa S 4T ie & College	125	2009	2011	-	**100400692**	19x17	8,6	6
Vespa Sprint 4T ie	125	2014	2015	-	**100400992**	20x15	19,2	6
X Evo	125	2007	2012	**100400250**	**100400252**	19x17	7,3	6
X10 4T 4V ie Eu3	125	2012	2012	**100400250**	**100400252**	19x17	7,3	6
X7 Eu3	125	2008	2008	**100400250**	**100400252**	19x17	7,3	6
x7 Evo Ie Eu3	125	2009	2010	**100400250**	**100400252**	19x17	7,3	6
X8	125	2004	2006	**100400320**	**100400322**	21x17	10,7	6
X8 Premium Eu2	125	2006	2006	**100400250**	**100400252**	19x17	7,3	6
X8 Premium Eu3	125	2006	2007	**100400250**	**100400252**	19x17	7,3	6
X8 Street Eu2	125	2006	2007	-	**100400692**	19x17	8,6	6
X9	125	2001	2002	**100400250**	**100400252**	19x17	7,3	6
X9 Evolution	125	2003	2006	**100400250**	**100400252**	19x17	7,3	6
X9 Evolution Eu3	125	2007	2007	**100400250**	**100400252**	19x17	7,3	6
Zip	125	2000	2002	-	**100400692**	19x17	8,6	6
Fly	150	2005	2007	**100400270**	**100400272**	19x17	10	6
Fly Eu3	150	2008	2011	**100400270**	**100400272**	19x17	10	6
Liberty	150	2001	2002	**100400270**	**100400272**	19x17	10	6
Liberty 4T 3V Lem	150	2013	2014	-	**100400982**	19x17	15,6	6
Liberty 4T Eu3 / Sport	150	2008	2008	**100400270**	**100400272**	19x17	10	6
Liberty Moc 4T	150	2009	2010	**100400270**	**100400272**	19x17	10	6
Skipper	150	1994	1997	**100400160**	-	19x17	12,5	6
Skipper 4T	150	2000	2002	**100400270**	**100400272**	19x17	10	6
Skipper Lx	150	1998	1999	**100400300**	-	19x17	13	6
Vespa Et4	150	1999	2002	**100400270**	**100400272**	19x17	10	6
Vespa Gts Super ie 4T 3V	150	2014	2015	-	**100400982**	19x17	15,6	6
Vespa Lt 4T 3V ie	150	2014	2014	-	**100400982**	19x17	15,6	6
Vespa Lx	150	2005	2006	**100400270**	**100400272**	19x17	10	6
Vespa Lx 4T FI	150	2009	2009	**100400270**	**100400272**	19x17	10	6
Vespa Lx Eu3	150	2006	2008	**100400270**	**100400272**	19x17	10	6
Vespa Lx Eu3 ie	150	2009	2011	**100400270**	**100400272**	19x17	10	6



Modello *Model*	**CC**	**Da** *From*	**A** *To*	**Codice RMS Standard** *RMS Standard Code*	**Codice RMS High Quality** *RMS HQ Code*	**Dimensioni (mm)** *Dimensions (mm)*	**Peso (gr)** *Weight (gr)*	**Numero pezzi** *Pcs*
Vespa Lx Touring	150	2010	2011	**100400270**	**100400272**	19x17	10	6
Vespa Primavera 4T 3V	150	2013	2015	-	**100400982**	19x17	15,6	6
Vespa S 4T	150	2008	2009	**100400270**	**100400272**	19x17	10	6
Vespa S 4T ie	150	2009	2011	**100400270**	**100400272**	19x17	10	6
Vespa Sprint 4T 3V ie	150	2015	2015	-	**100400982**	19x17	15,6	6
X8 Street Eu2	150	2006	2008	**100400270**	**100400272**	19x17	10	6
Hexagon Gtx	180	2000	2000	**100400320**	**100400322**	21x17	10,7	6
Hexagon Lx-Lxt	180	1998	1999	**100400150**	-	20x17	15	6
Super Hexagon Gtx 12"	180	2001	2002	**100400320**	**100400322**	21x17	10,7	6
X9 Amalfi	180	2000	2003	**100400320**	**100400322**	21x17	10,7	6
Beverly	200	2001	2003	**100400320**	**100400322**	21x17	10,7	6
Carnaby	200	2007	2008	**100400320**	**100400322**	21x17	10,7	6
Liberty	200	2006	2006	**100400320**	**100400322**	21x17	10,7	6
Liberty 4T Eu3	200	2007	2008	**100400320**	**100400322**	21x17	10,7	6
Liberty 4T Sport Eu3	200	2006	2007	**100400320**	**100400322**	21x17	10,7	6
Liberty Rst	200	2004	2004	**100400320**	**100400322**	21x17	10,7	6
Liberty Sport	200	2006	2006	**100400320**	**100400322**	21x17	10,7	6
Vespa Granturismo	200	2003	2007	**100400320**	**100400322**	21x17	10,7	6
X8	200	2005	2007	**100400320**	**100400322**	21x17	10,7	6
X8 125-200	200	2004	2004	**100400320**	**100400322**	21x17	10,7	6
X9	200	2002	2003	**100400320**	**100400322**	21x17	10,7	6
X9 Evolution	200	2003	2003	**100400320**	**100400322**	21x17	10,7	6
Beverly	250	2006	2007	-	**100400672**	21x17	11,2	6
Beverly Cruiser	250	2007	2009	-	**100400842**	21x17	13,8	6
Beverly Eu3 Mic	250	2007	2007	-	**100400842**	21x17	13,8	6
Beverly ie Eu3	250	2006	2008	-	**100400842**	21x17	13,8	6
Beverly Rst	250	2004	2005	-	**100400672**	21x17	11,2	6
Beverly Sport	250	2006	2008	-	**100400842**	21x17	13,8	6
Beverly Tourer Eu3	250	2008	2009	-	**100400842**	21x17	13,8	6
Carnaby	250	2008	2008	-	**100400842**	21x17	13,8	6
Hexagon Gt-Gtx	250	1998	2000	**100400070**	-	24x18	23	6
Mp3	250	2006	2008	-	**100400672**	21x17	11,2	6
Mp3 Lt	250	2009	2009	-	**100400672**	21x17	11,2	6
Mp3 Mic	250	2008	2009	-	**100400672**	21x17	11,2	6
Vespa Gt 60 Eu3	250	2006	2007	-	**100400672**	21x17	11,2	6
Vespa Gts- Abs	250	2005	2011	-	**100400672**	21x17	11,2	6
Vespa Gtv	250	2006	2009	-	**100400672**	21x17	11,2	6
Vespa Gtv 4T Navy	250	2008	2008	-	**100400672**	21x17	11,2	6
X7 Eu3	250	2008	2008	-	**100400672**	21x17	11,2	6
X8 Eu3	250	2005	2008	-	**100400672**	21x17	11,2	6
X9	250	2000	2001	**100400560**	-	23x18	24	6
X9 Evolution	250	2004	2006	-	**100400672**	21x17	11,2	6
Xevo	250	2007	2011	-	**100400672**	21x17	11,2	6
Beverly 300 ie Tourer	300	2009	2010	-	**100400842**	21x17	13,8	6
Beverly Rst 4T 4V ie Eu3	300	2010	2012	-	**100400842**	21x17	13,8	6
Carnaby Cruiser	300	2009	2011	-	**100400842**	21x17	13,8	6
Mp3 4T 4V Lt Ibrido	300	2010	2011	-	**100400842**	21x17	13,8	6
Mp3 ie Lt	300	2010	2011	-	**100400842**	21x17	13,8	6
Mp3 ie Lt / ie Lt Sport	300	2011	2013	-	**100400842**	21x17	13,8	6
Mp3 ie Lt Touring	300	2011	2011	-	**100400842**	21x17	13,8	6
Mp3 ie Mic	300	2010	2011	-	**100400842**	21x17	13,8	6
Mp3 ie Touring	300	2011	2011	-	**100400842**	21x17	13,8	6
Mp3 Lt Sport / Business Abs	300	2014	2014	-	**100400842**	21x17	13,8	6
Mp3 Yourban Erl	300	2011	2015	-	**100400842**	21x17	13,8	6
Mp3 Yourban Lt Erl	300	2011	2012	-	**100400842**	21x17	13,8	6
Vespa Gtv 4T ie	300	2010	2013	-	**100400842**	21x17	13,8	6



RULLI PULEGGE

ROLLER SETS

Modello *Model*	**CC**	**Da** *From*	**A** *To*	**Codice RMS Standard** *RMS Standard Code*	**Codice RMS High Quality** *RMS HQ Code*	**Dimensioni (mm)** *Dimensions (mm)*	**Peso (gr)** *Weight (gr)*	**Numero pezzi** *Pcs*
Vespa Gtv Via Montenapoleone	300	2010	2010	-	**100400842**	21x17	13,8	6
Vespa Gts ie	300	2012	2012	-	**100400842**	21x17	13,8	6
Vespa Gts ie & Touring	300	2012	2015	-	**100400842**	21x17	13,8	6
Vespa Gts ie Touring	300	2011	2012	-	**100400842**	21x17	13,8	6
Vespa Gts Super	300	2008	2011	-	**100400842**	21x17	13,8	6
Vespa Gts Super Sport	300	2010	2013	-	**100400842**	21x17	13,8	6
X7 Evo ie Eu3	300	2009	2010	-	**100400842**	21x17	13,8	6
Beverly Eu3	400	2006	2007	-	**100400642**	25x17	18,6	6
Beverly Tourer Eu3	400	2008	2010	-	**100400642**	25x17	18,6	8
Mp3	400	2007	2008	-	**100400642**	25x17	18,6	8
Mp3 ie Lt Touring	400	2011	2011	-	**100400642**	25x17	18,6	8
Mp3 ie Lt -Sport	400	2008	2010	-	**100400642**	25x17	18,6	8
Mp3 ie Rt Touring	400	2011	2011	-	**100400642**	25x17	18,6	8
Mp3 Lt	400	2009	2009	-	**100400642**	25x17	18,6	8
Mp3 Mic	400	2008	2011	-	**100400642**	25x17	18,6	8
X Evo	400	2007	2009	-	**100400642**	25x17	18,6	8
X8 Eu3	400	2006	2008	-	**100400642**	25x17	18,6	8
Beverly	500	2002	2004	**100400480**	-	25x22	27,3	8
Beverly	500	2005	2006	-	**100400652**	25x17	21,4	6
Beverly Cruiser	500	2007	2012	-	**100400652**	25x17	21,4	8
Beverly Eu3	500	2006	2008	-	**100400652**	25x17	21,4	8
Mp3 Lt Sport / Business	500	2011	2013	-	**100400652**	25x17	21,4	8
Mp3RISport / Business	500	2011	2012	-	**100400652**	25x17	21,4	8
X10 4T 4V ie Eu3	500	2012	2014	-	**100400652**	25x17	21,4	8
X9	500	2001	2002	**100400500**	-	25x22	29	8
X9 Evolution	500	2003	2005	**100400480**	-	25x22	27,3	8
X9 Evolution/Abs	500	2006	2007	-	**100400652**	25x17	21,4	8
SUZUKI								
Address	50	1992	1995	**100430660**	-	17x12	6,6	6
Aj Zz Sepia S	50	1995	1997	**100430660**	-	17x12	6,6	6
Ap R-T (R7)	50	1994	1997	**100430660**	-	17x12	6,6	6
AY AYW K1-K4	50	2001	2004	**100430660**	-	17x12	6,6	6
Katana V-Y	50	1997	2000	**100430720**	-	17x12	7,2	6
Zillion	50	1999	1999	**100430680**	-	17x12	6,8	6
Burgman K2-K6	125	2002	2006	**100400170**	-	20x15	13	6
Burgman K7-L0	125	2007	2010	**100400170**	-	20x15	13	6
Burgman L1	125	2011	2011	**100400170**	-	20x15	13	6
Sixteen	125	2008	2011	**100400470**	-	20x17	10	6
Uc Epicuro X - K1	125	1999	2001	-	**100400902**	20x15	14	6
Epicuro	150	1999	2001	**100400170**	-	20x15	13	6
Sixteen	150	2008	2011	**100400470**	-	20x17	10	6
Ux Sixteen K8 - L0	150	2008	2010	-	**100400902**	20x15	14	6
Uh Burgman K7-L0	200	2007	2010	-	**100400892**	24x17	14	6
Uh Burgman L1	200	2011	2012	-	**100400892**	24x17	14	6
Uh Burgman L3	200	2013	2013	-	**100400892**	24x17	14	6
Burgman	250	1998	2002	**100400180**	-	24x18	31	6
Burgman	250	2003	2006	**100400180**	-	24x18	31	6
Burgman	400	1999	2002	**100400190**	-	26x13	21,4	8
Burgman	400	2003	2012	**100400620**	-	26x13	19	8
YAMAHA								
Aerox	50	1997	2012	**100410550**	-	15x12	5,5	6
Aerox Eu2	50	2003	2003	**100410550**	-	15x12	5,5	6
Aerox R	50	1999	2000	**100410550**	-	15x12	5,5	6
Axis	50	1995	1996	**100410650**	-	15x12	6,5	6
Breeze	50	1994	1995	**100410700**	-	15x12	7	6
Bw'S	50	2003	2003	**100410620**	-	15x12	6,2	6
Bw'S	50	2004	2005	**100410550**	-	15x12	5,5	6



Modello *Model*	**CC**	**Da** *From*	**A** *To*	**Codice RMS Standard** *RMS Standard Code*	**Codice RMS High Quality** *RMS HQ Code*	**Dimensioni (mm)** *Dimensions (mm)*	**Peso (gr)** *Weight (gr)*	**Numero pezzi** *Pcs*
Bw'S	50	2006	2012	**100410550**	-	15x12	5,5	6
Bw'S Bump	50	1997	1998	**100410700**	-	15x12	7	6
Bw'S Naked	50	2003	2003	**100410620**	-	15x12	6,2	6
Bw'S Naked	50	2004	2004	**100410550**	-	15x12	5,5	6
Bw'S Naked	50	2009	2012	**100410550**	-	15x12	5,5	6
Bw'S Next Generation	50	1997	1998	**100410700**	-	15x12	7	6
Bw'S Next Generation	50	1999	1999	**100410650**	-	15x12	6,5	6
Bw'S Next Generation	50	2001	2006	**100410620**	-	15x12	6,2	6
Bw'S Next Generation	50	2004	2006	**100410550**	-	15x12	5,5	6
Bw'S Next Generation Cat.	50	1999	2000	**100410650**	-	15x12	6,5	6
Bw'S Original	50	1997	1998	**100410700**	-	15x12	7	6
Bw'S Original	50	1999	2000	**100410650**	-	15x12	6,5	6
Bw'S Original	50	2001	2002	**100410620**	-	15x12	6,2	6
Bw'S Original Eu2	50	2002	2002	**100410620**	-	15x12	6,2	6
Bw'S Original Eu2	50	2003	2003	**100410620**	-	15x12	6,2	6
Bw'S R	50	2001	2001	**100410620**	-	15x12	6,2	6
Cr Z	50	1991	1995	**100410650**	-	15x12	6,5	6
Ct Ss	50	1992	1995	**100410650**	-	15x12	6,5	6
Cts	50	1990	1995	**100410650**	-	15x12	6,5	6
Jog R	50	2002	2011	**100410650**	-	15x12	6,5	6
Jog R Eu2	50	2002	2005	**100410650**	-	15x12	6,5	6
Neo'S	50	1997	2012	**100410650**	-	15x12	6,5	6
Neo'S Eu2	50	2002	2003	**100410650**	-	15x12	6,5	6
Slider	50	2000	2002	**100410620**	-	15x12	6,2	6
Spy	50	1995	1998	**100410700**	-	15x12	7	6
Why	50	1998	2002	**100410650**	-	15x12	6,5	6
Why Eu1	50	1999	2000	**100410650**	-	15x12	6,5	6
Why Eu2	50	2003	2005	**100410650**	-	15x12	6,5	6
Aerox	100	2000	2002	**100410900**	-	15x12	9	6
Bw'S	100	1999	2001	**100410830**	-	15x12	8,3	6
Neo'S	100	1999	2002	**100410900**	-	15x12	9	6
Cygnus - Cygnus R	125	1995	1998	**100400390**	-	20x12	11,5	8
Cygnus - Cygnus R	125	1997	1997	**100400220**	-	20x12	12	6
Cygnus R	125	1999	2003	**100400370**	-	20x12	10,5	6
Hw Xenter	125	2012	2015	-	**100400912**	20x12	13	6
Majesty	125	1998	2000	**100400340**	-	20x12	8,5	6
Majesty	125	2001	2002	**100400040**	-	20x12	14	8
Majesty	125	2003	2005	**100400370**	-	20x12	10,5	6
Maxster	125	2001	2002	**100400370**	-	20x12	10,5	6
Teo'S	125	2000	2000	**100400370**	-	20x12	10,5	6
Xc125 Majesty S	125	2014	2014	-	**100400912**	20x12	13	6
X-City	125	2008	2011	**100400370**	-	20x12	10,5	6
X-Max	125	2006	2014	**100400370**	-	20x12	10,5	6
X-Max Abs	125	2013	2014	**100400370**	-	20x12	10,5	6
Yw Bw's	125	2010	2010	**100400220**	-	20x12	12	6
Hw Xenter	150	2012	2015	-	**100400912**	20x12	13	6
Majesty	150	2001	2002	**100400040**	-	20x12	14	8
Maxster	150	2001	2002	**100400040**	-	20x12	14	8
Teo'S	150	2001	2002	**100400040**	-	20x12	14	8
Majesty	180	2003	2006	**100400410**	-	20x12	15,3	8
Black X-Max	250	2009	2009	**100400770**	-	20x12	12	6
Majesty	250	1996	1998	**100400040**	-	20x12	14	8
Majesty	250	2000	2003	**100400390**	-	20x12	11,5	8
Majesty Abs	250	2003	2003	**100400390**	-	20x12	11,5	8
Majesty Dx	250	1998	1999	**100400040**	-	20x12	14	8
X-City	250	2008	2012	**100400770**	-	20x12	12	8



RULLI PULEGGE

ROLLER SETS

Modello *Model*	**CC**	**Da** *From*	**A** *To*	**Codice RMS Standard** *RMS Standard Code*	**Codice RMS High Quality** *RMS HQ Code*	**Dimensioni (mm)** *Dimensions (mm)*	**Peso (gr)** *Weight (gr)*	**Numero pezzi** *Pcs*
X-Max	250	2005	2009	**100400040**	-	20x12	14	8
X-Max -Abs- Sport	250	2007	2012	**100400770**	-	20x12	12	8
Versity	300	2003	2006	**100400410**	-	20x12	15,3	8
Majesty	400	2004	2008	**100400660**	-	25x15	15	8
Majesty - Abs	400	2009	2012	-	**100400832**	25x15	18	8
Majesty Abs	400	2007	2008	**100400660**	-	25x15	15	8
Yp X-Max	400	2013	2014	-	**100400862**	25x15	17	8
T-Max	500	2001	2003	-	**100400922**	25x15	20	8
T-Max- Abs -Black M.- White M.-Night M.	500	2004	2011	-	**100400832**	25x15	18	8
T-Max	530	2012	2013	-	**100400832**	25x15	18	8
T-Max Abs	530	2012	2013	-	**100400832**	25x15	18	8

KIT PULEGGIA MOTRICE + CINGHIA DAYCO - *FRONT PULLEY KIT + DAYCO BELT*



Codice Kit *Kit Code*	**Codice a barre** *Barcode*	**Descrizione kit** *Kit description*	**Codice RMS** *RMS Code*	**Descrizione** *Description*	**OEM**
163810010		Semipuleggia Motrice I *Drive half pulley*	**100320280**	MOTORI MINARELLI 50 cc APRILIA-BETA-ITALJET MALAGUTI-MBK-YAMAHA	-
		Semipuleggia fissa I *Fixed pulley*	**100320210**		-
		Cinghia Dayco I *Dayco belt*	**163750082**		-
163810020		Semipuleggia Motrice I *Drive half pulley*	**100320290**	YAMAHA - MBK 250 cc	-
		Cinghia Dayco I *Dayco belt Kevlar*	**163750650**		-
163810080		Semipuleggia Motrice I *Drive half pulley*	**100320060**	PIAGGIO 125 cc	CM144403
		Semipuleggia fissa I *Fixed pulley*	**100320310**		845607
		Cinghia Dayco I *Dayco belt Kevlar*	**163750600**		842009

DISCO CONTENITORE RULLI - *ROLLER WEIGHT HOUSING*

100300090

APRILIA 125-150-250-300: Atlantic • Scarabeo • Sport City • Mojito
DERBI 125-150-250-300: Boulevard • GP1 • Rambla
GILERA 125-180-200-250: DNA • Runner VX-VXR • Runner VX • Oregon
PIAGGIO 125-150-250: Beverly • Liberty • Medley • Vespa GTS • Vespa Sprint • Vespa GT • Vespa GTV • Vespa Primavera
R.O. 485710



100300100

GILERA 50: Easy Moving 95-96 • Storm 94-95 • Typhoon 94-97 • Typhoon X 98-99
PIAGGIO 50: Free 92-94 • Free FL 95-02 • NRG 94-96 • Quartz 92-96 • Sfera Maquillage 2 94 • Sfera RST 95-97 • Zip RST 96-99 • Vespa ET2 97-05
R.O. 289930



100300110

APRILIA 50-100: Scarabeo 2T • Scarabeo 4T • Sport City One • SR R • SR Motard
DERBI 50-100: Atlantis • Atlantis O2 • Boulevard • GP1 • Sonar • Variant Sport
GILERA 50: DNA • Ice • Runner • Runner SP • Runner Purejet • Stalker • Storm • Typhoon XR
PIAGGIO 50-100: Diesis • Fly 2T • Fly 4T • Liberty 2T • Liberty 4T • NRG Power • NRG Purejet • Vespa ET2 • Vespa ET4 • Vespa LX • Vespa LXV • Vespa Primavera
R.O. 480227



100300120

GILERA 125: Runner FX-FXR 97-02 • Typhoon X-XR 99-00
GILERA 180: Runner FX-FXR 97-02
PIAGGIO 125: Hexagon LX-LXT 98-99 • Skipper LX 98-99
R.O. 435893



100300130

PIAGGIO 125: Hexagon LX4 98-99 • Liberty 98-00 • Sfera 95-97 • Vespa ET4 96-98
R.O. 436699



100300140

MINARELLI - MBK - YAMAHA 50
R.O. 3VLE76230000



100300150

APRILIA 125-150-200-250-300: Atlantic Eu3 • Mojito • Scarabeo ie Light • Scarabeo • Scarabeo Light • Sport City One • SR Motard • SR Max
DERBI 125-200-250: Boulevard • GP1 • Rambla • Sonar
GILERA 125-200-250-300: Nexus Euro3 • Runner VX • Runner VXR • Nexus SP • Oregon
PIAGGIO 125-150-200-250-300: Beverly RST • Beverly Eu3 • Hexagon GTX • Liberty 4T • MP3 • Vespa 946 • Vespa Granturismo • Vespa GTS • Vespa GTV • Vespa LX • Vespa LXV • Vespa S • X7 • X8 • X9
R.O. 842204



100300210

APRILIA 500: Atlantic 01-04 • Scarabeo 03-06
GILERA 500: Nexus Eu3 03-05
PIAGGIO 500: Beverly 02-04 • X9 Evolution 03-05 • X9 01-02
R.O. 829344



100300220

APRILIA 400-500: Atlantic Sprint 05-08 • Scarabeo Light 06-08
GILERA 500: Fuoco 07-14 • Nexus Eu3 06-11
PIAGGIO 400: Beverly Eu3 06-10 • MP3 07-11 • X-Evo 07-11 • X8 Eu3 06-08
PIAGGIO 500: Beverly Cruiser 07-12 • Beverly 05-06 • X9 Evolution 06-07 • MP3 LT 11-18
R.O. 830901





KIT TASSELLI TRAINO - *SLIDERS*

100500010

Kit 3 pezzi | *Kit 3 pcs*

MINARELLI - MBK - YAMAHA 50

100500020

Kit 3 pezzi | *Kit 3 pcs*

GILERA - PIAGGIO 50: Tutti i modell - *All Models*
R.O. 289931

100500040

Kit 3 pezzi | *Kit 3 pcs*

PIAGGIO 500: Beverly 02-04 • X9 Evolution 03-04
R.O. 833293

100500050

Kit 4 pezzi | *Kit 4 pcs*

PIAGGIO 400-500: Beverly • X8
R.O. 842175

100500060

Kit 3 pezzi | *Kit 3 pcs*

PIAGGIO 250: Beverly RST 04-05 • Beverly Eu3 06 • X8 05-06 • Vespa GTS 05-06
R.O. 843028

100500080

CON DISTANZIALE | *WITH SPACER*
Kit 4 pezzi | *Kit 4 pcs*

MBK 250-300: YP Skyliner ABS 03 • YP Skiliner 00-03 • XC Kilibre 03
YAMAHA 250: YP Majesty ABS 03 • YP Majesty Dx 98-00 • YP Majesty 96-03 • XC Versity 03-06
R.O. 4H176530000 - 4HC176540000

100500090

Kit 3 pezzi | *Kit 3 pcs*

HONDA 125-150: SH

100500100

Kit 3 pezzi | *Kit 3 pcs*

APRILIA 125-200: Atlantic • Mojito • Scarabeo • Scarabeo ie Light • Sport City • SR Max • SR Motard
DERBI 125-150-200: Boulevard • GP1 • Rambla • Sonar • Variant Sport
GILERA 125-180-200: Nexus • Runner VX • Runner VXR
PIAGGIO 125-150-200: Fly • Liberty • Beverly • Sfera • X7
R.O. 434855

100500110

Kit 6 pezzi | *Kit 6 pcs*

GILERA 125: Runner FX-FXR 97-02 • Typhoon X-XR 99-00 • Typhoon 95-98
GILERA 180: Runner FX-FXR 97-02
R.O. 431280

100500120

CON DISTANZIALE | *WITH SPACER*
Kit 4 pezzi | *Kit 4 pcs*

YAMAHA 250: X-Max 05-10

100500130

Kit 3 pezzi | *Kit 3 pcs*

YAMAHA 125: X-Max
R.O. 1B9E76530000

100500160

Kit 4 pezzi | *Kit 4 pcs*

YAMAHA 400: XP X-Max 13-14
R.O. 1SDF581T0000



MINUTERIA METALLICA - *SMALL METAL PARTS*

121850220

DADO PULEGGIA MOTRICE M10x1,25 | *DRIVING PULLEY NUT M10x1,25*
Confezione 10 pz. | *10 Pcs Packing*

GILERA 50: Easy moving • Storm • Typhoon
PIAGGIO 50: Zip (Tutti i modelli - *All models)* • NRG • NTT • Sfera • Quartz • SKR City • NRG RST
PIAGGIO 125: Sfera • Vespa ET4 • Hexagon LX4 • Liberty 98-00
R.O. 436789 - 021110
MINARELLI YAMAHA 50
R.O.74918100



121850280

DADO M12x1,25 | *NUT M12x1,25*
Confezione 10 pz. | *10 Pcs Packing*

GILERA 125-180: Dna • Runner FX-FXR • Runner VX-VXR • Typhoon 95-98
PIAGGIO 125-150: Liberty 00-01 • Skipper 4T 01 • Skipper 98-99 • Skipper LX 98-99 • Vespa ET4 99-01 • Zip 00
PIAGGIO 125-180: Hexagon 94-97 • Super Hexagon GTX • X9 Amalfi 00-01
R.O. 436783



121850260

DADO M10x1,25 | *NUT M10x1,25*
Confezione 10 pz. | *10 Pcs Packing*

GILERA 50: Dna 00-01 • Easy Moving 95-96 • Runner 97-00 • Storm 94-95 • Stalker 97-01 • Typhoon X 98-99 • Typhoon XR 00 • Typhoon 94-97
PIAGGIO 50: Diesis 01 • Free • Liberty 4T • Liberty 2T • NRG 94-00 • NTT 95-96 • Quartz 92-96 • Sfera 91-97 • Typhoon 01 • Vespa ET4 00-01 • Vespa ET2 97-01 • Zip 92-00 •Zip 4T 00
PIAGGIO 80: Skr City 99
PIAGGIO 125: Hexagon LX4 98-99 • Liberty 98-00 • Vespa ET4 96-99 • Sfera 95-97
R.O. 289519



121850450

KIT DADO RONDELLA PULEGGIA MOTRICE | *DRIVING PULLEY NUT AND WASHER SET*

MINARELLI-YAMAHA 50



121855060

RONDELLA CONICA PER DADO FISSAGGIO PULEGGIA MOTRICE | *DRIVE PULLEY CONICAL WASHER*
Confezione 10 pz. | *10 Pcs Packing*

MINARELLI-YAMAHA 50



121855070

PIASTRINA TRAINO | *FIXED PULLEY TOOTHED WASHER*
Confezione 10 pz. | *10 Pcs Packing*

MINARELLI-MBK-YAMAHA 50
R.O. 902141305800



142740060

VENTOLA PULEGGIA MOTRICE | *DRIVING PULLEY FAN*

GILERA 50: Dna 00-01 • Ice 01 • Stalker 97-01 • Typhoon XR 00 • Runner 97-02
PIAGGIO 50: Diesis 01 • Free Delivery 00-01 • Liberty 97-02 •NRG 96-02 • Typhoon 01 • Vespa ET2 97-01 • Vespa ET4 00-02 • Zip 2T/4T 96-00
100: Free 02



142740070

VENTOLA PULEGGIA MOTRICE | *DRIVING PULLEY FAN*

PIAGGIO: Free 92-94 • Free FL 95-00 • NTT 95-96 • NRG 94-98 • Quartz 92-96 • Sfera base 91-97 • Vespa ET2 97-01 • Zip 92-00

100300470

PERNO GUIDA VARIATORE | *PULLEY PIN*
Confezione 5 pz. | *5 Pcs Packing*

APRILIA 50-100: Scarabeo 2T • Scarabeo 4T • Sport City One • SR R • SR Motard • Mojito Custom
R.O. AP8551041





100410010

KIT RICAMBIO PER PULEGGIA MOTRICE VARIATORE | *REPLACEMENT KIT FOR PULLEY*
Composto da: 8 Rulli, 16 Semigusci | *Composed by 8 rolls, 16 Half shells*

PIAGGIO: Ciao • Ciao PX • Ciao FL • Ciao Teen • Ciao Tre • Si • Si FL2 • Bravo • Superbravo • Boss • Grillo
R.O. 104559 - 104560



100240090

KIT ALBERO RUOTA POSTERIORE | *REAR WHEEL SHAFT KIT*

GILERA 50: Easy Moving • Storm • Typhoon
PIAGGIO 50: Free • Free FL • NRG RST • NTT • Quartz • Sfera • Zip • NRG
PIAGGIO 80: Skr City
R.O. Albero 478155 - R.O. Scodellino 194423 - R.O. Dado 194424 - R.O. Copiglia 012789



100240110

KIT ALBERO RUOTA POSTERIORE | *REAR WHEEL SHAFT KIT*

GILERA 50: Runner • Runner Doppio Disco • Stalker • Stalker Doppio Disco 97-00
PIAGGIO 50: Liberty • Vespa ET2 • Zip • NRG
R.O. Albero 480053 - R.O. Scodellino 194423 - R.O. Dado 194424 - R.O. Copiglia 012789



100240050

ALBERO RUOTA POSTERIORE | *REAR WHEEL AXLE*
Senza ingranaggio | *Without gear*

MOTORI MINARELLI-APRILIA-MALAGUTI-MBK-YAMAHA
MINARELLI-APRILIA-MALAGUTI-MBK-YAMAHA ENGINES



100240120

ALBERO SECONDARIO | *DRIVEN SHAFT*

PIAGGIO 125-150-200: Vespa PXE Arcobaleno • Vespa PX T5 • Vespa Cosa 1 • Vespa Cosa 2
R.O. 235908

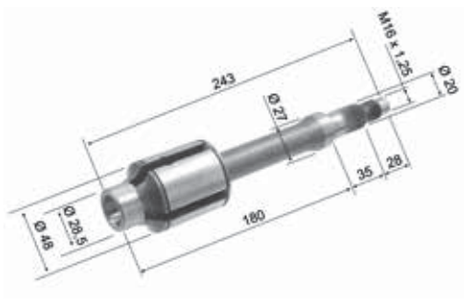

100240193

ALBERO SECONDARIO | *DRIVEN SHAFT*

PIAGGIO 125: Vespa PX • Vespa PXE Arcobaleno 81-97
PIAGGIO 150: Vespa Sprint
PIAGGIO 180-200: Vespa Rally
R.O. 157800

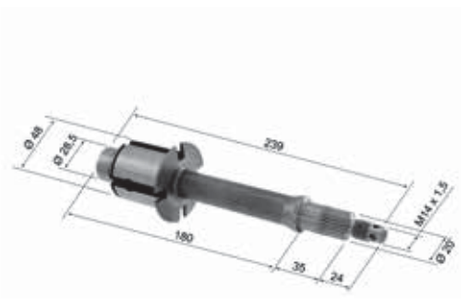

100220020

CROCERA INNESTO MARCE | *GEAR SELECTOR*
4 Griffe | *4 Jaws*
4 Velocità | *4 Speeds*
Altezza totale 50,2 mm | *Total height 50,2 mm*
Angolo arrotondato | *Rounded corner*

PIAGGIO 50: Vespa 50 • Vespa 50 Special • Vespa PK • Vespa PK XL • Vespa FL • Vespa HP • Ape 78-82
PIAGGIO 90: Vespa 90 • Vespa SS
PIAGGIO 125: Vespa Primavera • Vespa Primavera ET3 • Vespa PK • Vespa PK XL
R.O. 134902



100220100

CROCERA INNESTO MARCE | *GEAR SELECTOR*
Spessore 5,5 mm | *Thickness 5,5 mm*

PIAGGIO 150: Vespa PXE • Vespa PXE Arcobaleno <89 • Vespa >74
PIAGGIO 150: Vespa >74
R.O. 130939



100220110

CROCERA INNESTO MARCE | *GEAR SELECTOR*
4 Griffe | *4 Jaws*
4 Velocità | *4 Speeds*
Altezza totale 51 mm | *Total height 51 mm*
Angolo vivo | *Sharp corner*

PIAGGIO 50: Vespa 50 • Vespa 50 Special • Ape
PIAGGIO 90: Vespa 90 • Vespa SS
PIAGGIO 125: Vespa Primavera • Vespa Primavera ET3
PIAGGIO 250: Ape 74-78
R.O. 1115896



100220120

CROCERA INNESTO MARCE | *GEAR SELECTOR*
4 Griffe | *4 Jaws*
3 Velocità | *3 Speeds*
Altezza totale 50 mm | *Total height 50 mm*

PIAGGIO 50: Vespa PK FL (Fino al telaio 73407 - *Till chassis 73407*) • Vespa HP
PIAGGIO 90: Vespa 78-80
R.O. 1653046



100221040 NEW

CROCERA INNESTO I-II MARCIA | *I-II GEAR SELECTOR*

PIAGGIO 420: Ape Car-Max Diesel 86-96 • Ape Poker benzina 93 • Ape Poker Diesel 93-97 • Ape TM Diesel LCS 05-12 • Ape TM P703-P703V Diesel 87-04
R.O. 1681046



100221050 NEW

CROCERA INNESTO III-IV MARCIA | *III-IV GEAR SELECTOR*

PIAGGIO 420: Ape Car-Max Diesel 86-96 • Ape Poker benzina 93 • Ape Poker Diesel 93-97 • Ape TM Diesel LCS 05-12 • Ape TM P703-P703V Diesel 87-04
R.O. 1681056



100240060

INGRANAGGIO INVERTITORE | *INVERTER GEAR*
Numero denti: 20/12 | *Teeth number: 20/12*
Ø Albero 20/22 mm | *Ø Shaft 20/22 mm*

PIAGGIO 220: Ape MP P501-P601-P601V 78-96 • Ape TM P602 82-83 • Ape TM P703-P703V • Ape FL2 84-05
R.O. 169744



100240080

INGRANAGGIO SCORREVOLE | *SLIDING GEAR*
Numero denti: 21 | *Teeth number: 21*

PIAGGIO: Ape Car P2-P3 78-85 • Ape MP P501-P601-P601V 78-96 • Ape TM P602 82-83 • Ape TM P703-P703V • Ape FL2 84-05
R.O. 118909



121850290

DADO ALBERO PRIMARIO M9x1,25 | *PRIMARY SHAFT NUT M9x1,25*
Confezione 10 pz. | *10 Pcs Packing*

PIAGGIO 125-150-200: Vespa PXE Arcobaleno • Vespa PX • Vespa PX T5 • Vespa Rally • Cosa 2 • Cosa CL • Cosa CLX
R.O. 015231



121850340

KIT DADO-SCODELLINO-COPIGLIA ALBERO RUOTA POSTERIORE | *REAR WHEEL SHAFT NUT-CAP SET*

GILERA-PIAGGIO
R.O. 194423-563728



121860320

DADO PIGNONE M10x1,5 | *NUT M10x1,5*
Confezione 5 pz. | *5 Pcs Packing*

PIAGGIO 50: Vespa N • Vespa FL2 • Vespa PK • Vespa PK XL
PIAGGIO 125: Vespa PK XL • Vespa FL
R.O. 001508



121850350

DADO ALBERO RUOTA POSTERIORE | *REAR WHEEL SHAFT NUT*
Confezione 10 pz. | *10 Pcs Packing*

GILERA-PIAGGIO
R.O. 563728



121858520

RONDELLA DI FERMO | *WASHER*
Confezione 10 pz. | *10 Pcs Packing*

PIAGGIO 125-150-200: Vespa PX • Vespa PXE Arcobaleno VNX-VLX-VSX-VNX2-VLX2-VSX2
R.O. 016305





100280100

SERIE 11 DISCHI FRIZIONE | *11 CLUTCH DISCS SET*
YAMAHA 500: T-Max 01-11



100280110

SERIE 13 DISCHI FRIZIONE | *13 CLUTCH DISCS SET*
YAMAHA 530: T Max 12-14



100300070

DISCO INTERNO FRIZIONE | *CLUTCH INTERNAL DISC*
PIAGGIO 125-150: Vespa PXE
R.O. 094425

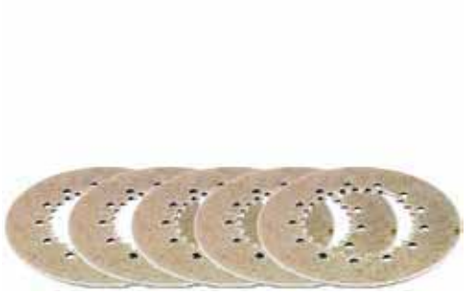



MOLLE FRIZIONE (VESPA-APE)

CLUTCH SPRINGS (VESPA-APE)

121910060

SET 6 MOLLE FRIZIONE | *6 CLUTCH SPRINGS SET*

YAMAHA 500: T-Max 01-07
R.O. 5GJ1653910



121910070

SET 6 MOLLE FRIZIONE | *6 CLUTCH SPRINGS SET*

YAMAHA 500: T-Max 08-11
R.O. 4B51653900



121910080

SET 6 MOLLE FRIZIONE | *6 CLUTCH SPRINGS SET*

YAMAHA 530: T-Max 12-14
R.O. 59C1653900



121950120

Confezione Pz. 5 | *5 Pcs Packing*

PIAGGIO 50-90-125: Vespa Primavera ET3 V5A1-V5B1-V5B2-V9A1-VMA2-VMB1-VMX1T
R.O. 112890



121950140

Confezione Pz. 10 | *10 Pcs Packing*

PIAGGIO 125-150-200: Vespa PX • Vespa PX T5 • Vespa PXE Arcobaleno • Cosa CL-CLX • Vespa GS
R.O. 022821





100240130

DENTI ELICOIDALI Z22 - Z63 | *HELICOIDAL TEETH Z22 - Z63*

PIAGGIO 50-90: Vespa PK



100240140

DENTI ELICOIDALI Z24 - Z61 | *HELICOIDAL TEETH Z24 - Z61*

PIAGGIO 50-90-125: Vespa Primavera ET3 • Vespa PK



100240150

DENTI DRITTI Z24 - Z72 | *STRAIGHT TEETH Z24 - Z72*

PIAGGIO 50-90: Vespa PK



100240160

DENTI DRITTI Z27 - Z69 | *STRAIGHT TEETH Z27 - Z69*

PIAGGIO 50-90-125: Vespa Primavera ET3 • Vespa PK



100240170

DENTI ELICOIDALI Z18 - Z67 SENZA PARASTRAPPI | *HELICOIDAL TEETH Z18 - Z67 WITHOUT BUFFER SPRINGS*

PIAGGIO 50: Vespa





PRESELETTORI CAMBIO (VESPA-APE)

GEAR BOX SELECTORS (VESPA-APE)

100221000

PIAGGIO 150: Vespa GL • Vespa Sprint • Vespa Sprint Veloce
PIAGGIO 200: Vespa Rally
VLA-VLB-VLC-VLB1T-VSE1T
R.O. 092167



100221010

PIAGGIO 125: Vespa PX
PIAGGIO 150: Vespa PX • Vespa P150S
PIAGGIO 200: Vespa PX
VNX-VLX-VSX-VBX1T
R.O. 138880



100221020

CON SENSORE FOLLE | *WITH NEUTRAL SENSOR*
PIAGGIO 125-150: Vespa PX • Vespa Cosa 1
PIAGGIO 200: Vespa PXE Arcobaleno • Vespa Cosa 1
VNX2T-VLX1T-VXS1T-VNR1T
R.O. 199803



100221030

PIAGGIO 125-150-200: Vespa PX • Vespa PX T5
VNX2T-VLX1T-VXS1T
R.O. 196585



100300050

KIT PARASTRAPPI TRASMISSIONE PRIMARIA | *PRIMARY DRIVE KIT*

PIAGGIO 125: Vespa PX • Vespa TS
PIAGGIO 150: Vespa Sprint • Vespa Super
R.O. 077370-077371- 078853



100300060

KIT PARASTRAPPI TRASMISSIONE PRIMARIA | *PRIMARY DRIVE KIT*

PIAGGIO 125-150-200: Vespa PX • Vespa PXE Arcobaleno • Vespa Cosa 1 • Vespa Cosa 2
R.O. 077370-077371-078853-077372



100300080

KIT PARASTRAPPI TRASMISSIONE PRIMARIA | *PRIMARY DRIVE KIT*

PIAGGIO 50-90: Vespa
PIAGGIO 125: Vespa Primavera • Vespa Primavera ET3
R.O. 154625



100260100

MOZZETTO FRIZIONE | *CLUTCH SPIDER*

PIAGGIO 50: Vespa • Vespa PK • Vespa PK XL • Ape
PIAGGIO 125: Vespa PK • Vespa Primavera • Vespa Primavera ET3
R.O. 79497



100300430

RALLINO FRIZIONE | *PUSH ROD CLUTCH*

PIAGGIO 50-90: Vespa 50-90
R.O. 078453



100300440

RALLINO FRIZIONE | *PUSH ROD CLUTCH*

PIAGGIO 50: Vespa N • Vespa PK • Vespa PK XL • Vespa PK XL Rush
PIAGGIO 125: Vespa PK XL • Vespa Primavera ET3
R.O. 165019



100300460

RALLINO FRIZIONE | *PUSH ROD CLUTCH*

PIAGGIO 125-150-200: Vespa PX • Cosa 2
R.O. 089858



100260130
100260230

CAMPANA FRIZIONE | *CLUTCH BOX*

PIAGGIO 125: Vespa PX
PIAGGIO 150: Vespa PX • Vespa Sprint • Vespa Super • Vespa GL
R.O. 059369



100260140
100260240

CAMPANA FRIZIONE | *CLUTCH BOX*

PIAGGIO 125: Vespa PX T5
PIAGGIO 150: Cosa CL-CLX
PIAGGIO 200: Vespa PXE Arcobaleno • Cosa CL-CLX • Vespa Rally
R.O. 2458295



100260253

BOCCOLA FRIZIONE | *CLUTCH BUSH*
Ø106 x 31 mm

PIAGGIO 125: Vespa PX T5
PIAGGIO 180: Vespa Rally
PIAGGIO 200: Vespa PE • Vespa Rally • Vespa Cosa 1 • Vespa Cosa 2
R.O. 159853



100300483

LEVA ESTERNA FRIZIONE | *EXTERNAL CLUTCH LEVER*

PIAGGIO 125-150-200: Vespa PX • Vespa Cosa 2
VN1-VN2-VNA-VNB-VNX2-VLX1-VSX1
R.O. 0979844



100300493

COPERCHIO FRIZIONE | *CLUTCH COVER*

PIAGGIO 125-150-200: Vespa PX • Vespa Cosa 2
VN1-VN2-VNA-VNB-VNX2-VLX1-VSX1
R.O. 50100



100300161

PIATTELLO CON MOLLA RALLINO FRIZIONE | *ACTUATING PLATE FOR CLUTCH*

PIAGGIO 125-150: Vespa PX • Vespa GL • Vespa Sprint • Vespa Super
VNX-VLX-VLB-VLA-VBC
R.O. 016821 - 014457 – 2/89858



100300171

PIATTELLO CON MOLLA RALLINO FRIZIONE | *ACTUATING PLATE FOR CLUTCH*

PIAGGIO 200: Vespa PE
VSX-VSX2
R.O. 025026 - 014457 - 2/89858



100300180

PIATTELLO CON MOLLA RALLINO FRIZIONE | *ACTUATING PLATE FOR CLUTCH*

PIAGGIO 50: Vespa Special • Vespa PK • Vespa PK XL • Vespa PK XL Rush
R.O. 016821 - 014457 - 165019



100300450

LEVETTA FRIZIONE | *CLUTCH LEVER*
Confezione 5 pz. | *5 Pcs Packing*

PIAGGIO 125: Vepa PX • Vespa PX T5 • Vespa PXE Arcobaleno • Vespa Cosa 2 • Cosa CL-CLX
PIAGGIO 150: Vespa PX • Vespa PXE Arcobaleno
PIAGGIO 200: Vespa PXE Arcobaleno
R.O. 083806



100360260

SERIE MASSETTE FRIZIONE AVVIAMENTO | *STARTER CLUTCH SET WITH AUTOMATIC SPEED*
Senza variatore | *Without variator*

PIAGGIO: Ciao • Bravo • Si • Boxer
R.O. 249813



121890070

MOLLA MASSETTA FRIZIONE | *CLUTCH SET SPRING*
Confezione 50 pz. | *50 Pcs Packing*

PIAGGIO: Ciao • Si • Grillo • Bravo 2
R.O. 121753

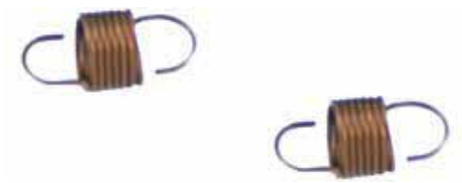

121830160

121830163

GIUNTO ELASTICO | *ELASTIC COUPLING*

PIAGGIO 220: Ape Car P2-P3 78-85 • Ape MP P501-P601 78-96 • Ape TM P602 82-83 • Ape TM P703 FL2 99-07 • Ape TM P703V 84-05 • Ape TM 09-16
PIAGGIO 420: Ape TM Diesel LCS 05-12 • Ape TM P703-P703V Diesel 87-04
R.O. 228302



121830170

GIUNTO ELASTICO | *ELASTIC COUPLING*
Fori fissaggio Ø10 mm | *Fixing holes Ø10 mm*
PIAGGIO 420: Ape Poker Benzina 93 • Ape Poker Diesel 93-97
R.O 226345



121830250

GIUNTO ELASTICO | *ELASTIC COUPLING*
Fori fissaggio Ø12 mm | *Fixing holes Ø12 mm*
PIAGGIO 420: Ape Poker Benzina 93 • Ape Poker Diesel 93-97 • Ape Car - Max Diesel 86-96
PIAGGIO 500: Quargo 05-17
PIAGGIO 750: Quargo Diesel 04-06
R.O. 268253



121830180

CUFFIA TENUTA OLIO SEMIASSE | *DRIVESHAFT PROTECTION*

PIAGGIO 50: Ape P 80-85 • Ape TM P 85-89 • Ape FL-FL2 89-95 • Ape FL3 Europa 96-99 • Ape RST Mix 99-05 • Ape 50 09-15
PIAGGIO 250: Ape 250
R.O.119989



121830190

CUFFIA TENUTA OLIO SEMIASSE | *DRIVESHAFT PROTECTION*

PIAGGIO 200: Ape Calessino City 03-15
PIAGGIO 220: Ape MP P501-P601-P601V 78-96 • Ape Car P2-P3 78-85 • Ape TM P602 82-83 • Ape TM P703-P703V FL2 84-05 • Ape TM 09-15
R.O.198618



121850230

DADO CAMPANA FRIZIONE POSTERIORE | *DRIVEN PULLEY DRUM NUT*
Ø10 x 1 mm | *Ø10 x 1 mm*
Confezione 10 pz. | *10 Pcs Packing*
MINARELLI - YAMAHA 50
R.O. 74920400



121860330

DADO FRIZIONE | *FLYWHEEL NUT*
M12 x 1,5 mm | *M12 x 1,5 mm*
Confezione 5 pz. | *5 Pcs Packing*
PIAGGIO 50-90: Vespa 50-90 • Vespa PK • Vespa PK XL • Vespa PK XL FL2
PIAGGIO 125: Vespa Primavera • Vespa Primavera ET3
R.O. 001510



121850390

DADO CAMPANA FRIZIONE | *CLUTCH RING NUT*
Confezione 10 pz. | *10 Pcs Packing*

PIAGGIO 125-150-200: Vespa PX • Vespa PE
R.O. 020375



100260120

CAMPANA INTERNA | *INTERNAL DRUM CLUTCH*
Senza variatore | *Without variator*

PIAGGIO: Ciao • Si • Bravo • Boxer
R.O. 114943



121850320

DADO MOZZO FRIZIONE POSTERIORE | *REAR CLUTCH HUB NUT*
M38 x 1 mm | *M38 x 1 mm*
Confezione 10 pz. | *10 Pcs Packing*

PIAGGIO 50: Sfera 91-93 • Zip 92-94
PIAGGIO 80: SKR City 99
PIAGGIO 125: Sfera 95-97 • Liberty 98-00 • Vespa ET4 96-99 • Hexagon LX4 98-99
R.O. 285017



121850330

DADO FRIZIONE | *CLUTCH NUT*
M36 x 1 mm | *M36 x 1 mm*
Confezione 10 pz. | *10 Pcs Packing*

APRILIA 125-200-250: Atlantic • Mojito • Scarabeo • Sport City • SR • SR Max • SR Motard
DERBI 125-150-200-250-300: Boulevard • Rambla • GP1 • Sonar
GILERA 125-200-250-300: Nexus • Typhoon • Oregon • DNA •Runner
PIAGGIO 125-150-200-250-300-350: Beverly • Hexagon • Liberty 4T • MP3 • Skipper • Vespa Granturismo • Vespa LX • Vespa LXV • Vespa GTS • Vespa GTV • X7 • X8 • X9 • X10
R.O. 433232



121850460

DADO MOZZO FRIZIONE POSTERIORE | *REAR CLUTCH HUB NUT*
Confezione 10 pz. | *10 Pcs Packing*

PIAGGIO 400: Beverly • MP3 • X-Evo • X8
PIAGGIO 500: Beverly • Beverly Cruiser • X9 • X10 • MP3
R.O. 825385



121858570

BALESTRINO FRIZIONE | *CLUTCH PUSH RING*
Confezione 20 pz. | *20 Pcs Packing*

PIAGGIO 50: Ciao • Si
R.O. 220441



121850470

DADO FRIZIONE | *CLUTCH NUT*
Confezione 5 pz. | *5 Pcs Packing*

MBK 125: Flame F 00 • Flame R 95-99 • Flame 95-99 • Doodo 00-01 • Skyliner 98-02
MBK 150: Vertex 97 • Skyliner 00-02
MBK 250: Skyliner ABS 03 • Skyliner 00-03
MBK 300: Kilibre 03
YAMAHA 125: Cygnus X 04-11 • Beluga 90-95 • Cygnus R 99- 03 • Cygnus R 97-98 • Cygnus 95-98 • Teo's 00 • Majesty 98-02 • YW Bw's 10
YAMAHA 150: XC Fly One R 97-98 • XC Fly One 90-95 • YP Majesty 00-02
YAMAHA 250: VP X-City 07-12 • YP Majesty ABS 03 • YP Majesty 95-03 • YP R X-Max ABS 11-12 • X-Max 05-12
YAMAHA 300: XC Versity 03-06
YAMAHA 400: Majesty ABS 07-11 • Majesty 04-11
YAMAHA 500: T-Max Abs 11 • T-Max ABS 05-11 • T-Max Black Max Night Max 07 • T-Max Black Max 06 • T-Max 11 • T-Max White Max 10 • T-Max 01-11
YAMAHA 530: T-Max ABS 12 • T-Max 12
R.O. 901703627900



121858540

RONDELLA MOZZO POSTERIORE | *HUB WASHER*
Confezione 20 pz. | *20 Pcs Packing*

PIAGGIO 50: Ciao • Si
R.O. 131514



121858550

RONDELLA PULEGGIA POSTERIORE | *REAR PULLEY WASHER*
Confezione 20 pz. | *20 Pcs Packing*

PIAGGIO 50: Ciao • Si
R.O. 103556



121858560

RONDELLA PULEGGIA | *PULLEY WASHER*
Confezione 20 pz. | *20 Pcs Packing*

PIAGGIO 50: Ciao • Si
R.O. 103557



CARROZZERIA

BODY WORK
CARROCERIA
CARROSSERIE

Rétroviseurs	*Espejos*	*Rear View Mirrors*	**SPECCHIETTI RETROVISORI**	**968**
Adaptateurs Rétroviseurs	*Adaptadores Espejos*	*Rear View Mirrors Adapters*	**ADATTATORI SPECCHIETTI**	**1056**
Accessoires Rétroviseurs	*Accesorios Espejos*	*Rear View Mirrors Accessories*	**ACCESSORI SPECCHIETTI**	**1057**
Garde-Boues	*Guardabarros*	*Mudguards*	**PARAFANGHI**	**1058**
Crêtes de Garde-Boue	*Crestas Guardabarros*	*Fender Crests*	**CRESTE PARAFANGO**	**1062**
Couvres Guidon	*Cubre Manillares*	*Handlebar Covers*	**COPRIMANUBRI**	**1063**
Couvertures Volant Moteur	*Cubiertas del Volante*	*Flywheel Covers*	**COPRIVOLANO**	**1065**
Caches Direction	*Cubre Direccion*	*Steering Covers*	**CALANDRE**	**1066**
Contours Chassis Vespa	*Bordones Chasis Vespa*	*Chassis Beadings Vespa*	**PROFILI CARROZZERIA VESPA**	**1068**
Tapis de Sol	*Alfombrillas*	*Floor Mats*	**TAPPETINI IN GOMMA**	**1071**
Plaques - Insignes - Emblèmes	*Letreros - Logotipos - Emblemas*	*Nameplates - Badges - Emblems*	**TARGHETTE - SCUDI - FREGI**	**1073**
Portes Plaque	*Portamatriculas*	*Plate Holders*	**PORTATARGA**	**1085**
Plastiques Châssis	*Plásticos de Chasis*	*Chassis Plastics*	**PLASTICHE CARROZZERIA**	**1086**
Balais Essuie-Glace	*Limpiaparabrisas*	*Wiper Blades*	**SPAZZOLE TERGICRISTALLO**	**1089**
Caoutchoucs Anti-Vibrations	*Gomas Antivibración*	*Rubber Pads*	**GOMMINI ANTIVIBRANTI**	**1090**
Rivets Plastiques	*Remaches en plastico*	*Plastic Rivets*	**RIVETTI**	**1091**
Accessories Carrosserie	*Accesorios Carrocerìa*	*Bodyparts Accessories*	**ACCESSORI CARROZZERIA**	**1093**



SPECCHIETTI RETROVISORI

REAR VIEW MIRRORS

Modello *Model*	**CC**	**Da** *From*	**A** *To*	**Telaio** *Frame*	**Specchio Sinistro OEM** *Left Mirror OEM*	**Specchio Sinistro Codice RMS** *Left Mirror RMS Code*	**Specchio Destro OEM** *Right Mirror OEM*	**Specchio Destro Codice RMS** *Right Mirror RMS Code*	**Note** *Notes*
APRILIA									
Amico	50	1994	1994	HR	AP8201836	**122760080**	AP8201835	**122770080**	
Amico	50	1996	1998	HU010	AP8201836	**122760080**	AP8201975	**122770080**	
Amico Gl-Gle	50	1993	1995	HU	AP8201836	**122760080**	AP8201835	**122770080**	
Gulliver	50	1995	1998	LH000	AP8201836	**122760080**	AP8201975	**122770080**	
Gulliver Lc	50	1996	1998	LH040	AP8201836	**122760080**	AP8201975	**122770080**	
Mojito Custom	50	1999	2003	PK001\PKE10	AP8202170	**122760870**	AP8202166	**122770870**	
Mojito Custom 2T Motore Piaggio	50	2004	2010	TF000\TFA00	AP8202170	**122760870**	AP8202166	**122770870**	
Mx	50	2004	2004	STC00	AP8201984	**122760130**	AP8201984	**122760130**	Non omologato | *Not homologated*
Mx	50	2004	2004	STC00	AP8201984	**122760160**	AP8201984	**122760160**	
Rally Liquid Cooled	50	1996	1999	MDA00\MAD10	AP8201984	**122760130**	AP8201984	**122760130**	Non omologato | *Not homologated*
Rally Liquid Cooled	50	1996	1999	MDA00\MAD10	AP8201984	**122760160**	AP8201984	**122760160**	
Rs	50	1996	1998	MM02	AP8102633	**122760120**	AP8102632	**122770120**	
Rs	50	1999	2005	PG00\SE00	AP8102633	**122760120**	AP8102632	**122770120**	
Rs	50	2006	2010	PL000\RG000	AP8102633	**122760120**	AP8102632	**122770120**	
Rx	50	2003	2004	STA0	AP8201984	**122760130**	AP8201984	**122760130**	Non omologato | *Not homologated*
Rx	50	2003	2004	STA0	AP8201984	**122760160**	AP8201984	**122760160**	
Rx - Sx	50	2006	2010	PV000\PVA00	AP8201984	**122760130**	AP8201984	**122760130**	Non omologato | *Not homologated*
Rx - Sx	50	2006	2010	PV000\PVA00	AP8201984	**122760160**	AP8201984	**122760160**	
Rx Enduro - Mx Motard	50	1995	2003	MU02\ST00	AP8201984	**122760130**	AP8201984	**122760130**	Non omologato | *Not homologated*
Rx Enduro - Mx Motard	50	1995	2003	MU02\ST00	AP8201984	**122760160**	AP8201984	**122760160**	
Rx Racing	50	2003	2006	STC00	AP8201984	**122760130**	AP8201984	**122760130**	Non omologato | *Not homologated*
Rx Racing	50	2003	2006	STC00	AP8201984	**122760160**	AP8201984	**122760160**	
Scarabeo	50	1993	1997	HS\LE	AP8201984	**122760130**	AP8201984	**122760130**	Non omologato | *Not homologated*
Scarabeo	50	1993	1997	HS\LE	AP8201984	**122760160**	AP8201984	**122760160**	
Scarabeo	50	1998	1998	PF000\PF0100	AP8201984	**122760130**	AP8201984	**122760130**	Non omologato | *Not homologated*
Scarabeo	50	1998	1998	PF000\PF0100	AP8201984	**122760160**	AP8201984	**122760160**	
Scarabeo	50	1999	1999	PF0\PFG	AP8201984	**122760130**	AP8201984	**122760130**	Non omologato | *Not homologated*
Scarabeo	50	1999	1999	PF0\PFG	AP8201984	**122760160**	AP8201984	**122760160**	
Scarabeo	50	2000	2005	PFG00\TH000	AP8201984	**122760130**	AP8201984	**122760130**	Non omologato | *Not homologated*
Scarabeo	50	2000	2005	PFG00\TH000	AP8201984	**122760160**	AP8201984	**122760160**	
Scarabeo 2T	50	2014	2014	THH00	CM260001	**122762240**	CM260002	**122772240**	
Scarabeo 2T Eu2 Motore Piaggio	50	2010	2012	THG00	AP8201984	**122760130**	AP8201984	**122760130**	Non omologato | *Not homologated*
Scarabeo 2T Eu2 Motore Piaggio	50	2010	2012	THG00	AP8201984	**122760160**	AP8201984	**122760160**	
Scarabeo 2T Net	50	2009	2009	THG00	AP8201984	**122760130**	AP8201984	**122760130**	Non omologato | *Not homologated*
Scarabeo 2T Net	50	2009	2009	THG00	AP8201984	**122760160**	AP8201984	**122760160**	
Scarabeo 2T Net	50	2010	2010	THG00	AP8201984	**122760130**	AP8201984	**122760130**	Non omologato | *Not homologated*
Scarabeo 2T Net	50	2010	2010	THG00	AP8201984	**122760160**	AP8201984	**122760160**	
Scarabeo 4T	50	2002	2006	TG000	AP8201984	**122760130**	AP8201984	**122760130**	Non omologato | *Not homologated*
Scarabeo 4T	50	2002	2006	TG000	AP8201984	**122760160**	AP8201984	**122760160**	
Scarabeo 4T 4V	50	2010	2012	TGE00	AP8201984	**122760130**	AP8201984	**122760130**	Non omologato | *Not homologated*
Scarabeo 4T 4V	50	2010	2012	TGE00	AP8201984	**122760160**	AP8201984	**122760160**	
Scarabeo 4T 4V	50	2014	2014	TGG00	CM260001	**122762240**	CM260002	**122772240**	
Scarabeo 4T 4V Net	50	2009	2009	TGE00	AP8201984	**122760130**	AP8201984	**122760130**	Non omologato | *Not homologated*



Modello *Model*	**CC**	**Da** *From*	**A** *To*	**Telaio** *Frame*	**Specchio Sinistro OEM** *Left Mirror OEM*	**Specchio Sinistro Codice RMS** *Left Mirror RMS Code*	**Specchio Destro OEM** *Right Mirror OEM*	**Specchio Destro Codice RMS** *Right Mirror RMS Code*	**Note** *Notes*
Scarabeo 4T 4V Net	50	2009	2009	TGE00	AP8201984	**122760160**	AP8201984	**122760160**	
Scarabeo 4T 4V Net	50	2010	2010	TGE00	AP8201984	**122760130**	AP8201984	**122760130**	Non omologato | *Not homologated*
Scarabeo 4T 4V Net	50	2010	2010	TGE00	AP8201984	**122760160**	AP8201984	**122760160**	
Scarabeo 4T Restyling Eu3	50	2006	2009	TGA00\TGB00	AP8201984	**122760130**	AP8201984	**122760130**	Non omologato | *Not homologated*
Scarabeo 4T Restyling Eu3	50	2006	2009	TGA00\TGB00	AP8201984	**122760160**	AP8201984	**122760160**	
Scarabeo Ditech	50	2001	2004	SCA00	AP8201984	**122760130**	AP8201984	**122760130**	Non omologato | *Not homologated*
Scarabeo Ditech	50	2001	2004	SCA00	AP8201984	**122760160**	AP8201984	**122760160**	
Scarabeo Quattro	50	2009	2009	TGE00	AP8201984	**122760130**	AP8201984	**122760130**	Non omologato | *Not homologated*
Scarabeo Quattro	50	2009	2009	TGE00	AP8201984	**122760160**	AP8201984	**122760160**	
Scarabeo Street	50	2005	2006	THE00	AP8201984	**122760130**	AP8201984	**122760130**	Non omologato | *Not homologated*
Scarabeo Street	50	2005	2006	THE00	AP8201984	**122760160**	AP8201984	**122760160**	
Scarabeo Street 2T Restyling	50	2006	2009	THG00	AP8201984	**122760130**	AP8201984	**122760130**	Non omologato | *Not homologated*
Scarabeo Street 2T Restyling	50	2006	2009	THG00	AP8201984	**122760160**	AP8201984	**122760160**	
Sr	50	1993	1993	GP\LB	AP8201836	**122760080**	AP8201835	**122770080**	
Sr	50	1994	1996	LF	AP8201836	**122760080**	AP8201975	**122770080**	
Sr Ditech Euro 2	50	2002	2004	RLD10	AP8201976	**122760080**	AP8201975	**122770080**	
Sr H2O Ditech E Carburatore	50	2000	2004	RLA\RLB\RLE	AP8201976	**122760080**	AP8201975	**122770080**	
Sr Iniezione E Carburatore	50	2014	2014	VFB00\VFD00\VFU00	AP8202395	**122760320**	AP8202394	**122770320**	
Sr Liquid Cooled	50	1994	1996	LC	AP8201836	**122760080**	AP8201975	**122770080**	
Sr R Factory Ie E Carburatore	50	2010	2014	VFB00\VFD00\VFU00	AP8202395	**122760320**	AP8202394	**122770320**	
Sr R Factory Motore Aprilia	50	2005	2005	VFA00	AP8202395	**122760320**	AP8202394	**122770320**	
Sr Street	50	2003	2012	TE000\TEA00	AP8201976	**122760080**	AP8201975	**122770080**	
Sr Www	50	1997	2001	LYH00	AP8201836	**122760080**	AP8201975	**122770080**	
Tuono	50	2003	2004	SEA00	AP8104566	**122771230**	AP8104566	**122771230**	
Scarabeo 4T	100	2001	2005	SA000\VA000	AP8201984	**122760130**	AP8201984	**122760130**	Non omologato | *Not homologated*
Scarabeo 4T	100	2001	2005	SA000\VA000	AP8201984	**122760160**	AP8201984	**122760160**	
Scarabeo 4T	100	2010	2012	VAA00\VAC00	AP8201984	**122760130**	AP8201984	**122760130**	Non omologato | *Not homologated*
Scarabeo 4T	100	2010	2012	VAA00\VAC00	AP8201984	**122760160**	AP8201984	**122760160**	
Scarabeo 4T	100	2014	2014	VAB00	CM259901	**122762360**	CM259902	**122772360**	
Scarabeo 4T Net	100	2009	2009	VAC\VAA	AP8201984	**122760130**	AP8201984	**122760130**	Non omologato | *Not homologated*
Scarabeo 4T Net	100	2009	2009	VAC\VAA	AP8201984	**122760160**	AP8201984	**122760160**	
Scarabeo 4T Net Eu3	100	2010	2010	ZD4VAC\ZD4VAA	AP8201984	**122760130**	AP8201984	**122760130**	Non omologato | *Not homologated*
Scarabeo 4T Net Eu3	100	2010	2010	ZD4VAC\ZD4VAA	AP8201984	**122760160**	AP8201984	**122760160**	
Scarabeo 4T Restyling	100	2006	2009	VAA00\VAC00	AP8201984	**122760130**	AP8201984	**122760130**	Non omologato | *Not homologated*
Scarabeo 4T Restyling	100	2006	2009	VAA00\VAC00	AP8201984	**122760160**	AP8201984	**122760160**	
Scarabeo Motore Minarelli	100	2000	2000	REA0	AP8201984	**122760130**	AP8201984	**122760130**	Non omologato | *Not homologated*
Scarabeo Motore Minarelli	100	2000	2000	REA0	AP8201984	**122760160**	AP8201984	**122760160**	
Scarabeo Motore Yamaha	100	2000	2000	RE00	AP8201984	**122760130**	AP8201984	**122760130**	Non omologato | *Not homologated*
Scarabeo Motore Yamaha	100	2000	2000	RE00	AP8201984	**122760160**	AP8201984	**122760160**	
Leonardo	125	1999	2002	MB03-6\MBA2-5	AP8102867	**122760300**	AP8102866	**122770300**	
Leonardo St	125	2001	2004	TB000\TB002	AP8102867	**122760300**	AP8102866	**122770300**	



SPECCHIETTI RETROVISORI

REAR VIEW MIRRORS

Modello *Model*	**CC**	**Da** *From*	**A** *To*	**Telaio** *Frame*	**Specchio Sinistro OEM** *Left Mirror OEM*	**Specchio Sinistro Codice RMS** *Left Mirror RMS Code*	**Specchio Destro OEM** *Right Mirror OEM*	**Specchio Destro Codice RMS** *Right Mirror RMS Code*	**Note** *Notes*
Mojito	125	2003	2007	RY000\RYA00\RY010	AP8202170	**122760870**	AP8202166	**122770870**	
Mojito	125	2008	2008	SZA00	AP8202170	**122760870**	AP8202166	**122770870**	
Mojito Retro' - Custom	125	1999	2001	PM000\PM010	AP8202170	**122760870**	AP8202166	**122770870**	
Mx	125	2004	2006	TZ000	AP8201984	**122760130**	AP8201984	**122760130**	Non omologato | *Not homologated*
Mx	125	2004	2006	TZ000	AP8201984	**122760160**	AP8201984	**122760160**	
Rs	125	1998	1998	MPA0	AP8102633	**122760120**	AP8102632	**122770120**	
Rs	125	1999	2005	MPB1\SF00	AP8102633	**122760120**	AP8102632	**122770120**	
Rs	125	2006	2010	PYA00\RD000\RM000	AP8102633	**122760120**	AP8102632	**122770120**	
Rx	125	1994	1998	HT\MT	AP8201984	**122760130**	AP8201984	**122760130**	Non omologato | *Not homologated*
Rx	125	1994	1998	HT\MT	AP8201984	**122760160**	AP8201984	**122760160**	
Rx - Sx	125	2008	2010	RV000\RVA00	AP8201984	**122760130**	AP8201984	**122760130**	Non omologato | *Not homologated*
Rx - Sx	125	2008	2010	RV000\RVA00	AP8201984	**122760160**	AP8201984	**122760160**	
Scarabeo	125	2003	2003	TD000\TDA01	AP8104519	**122760260**	AP8104518	**122770260**	Modello GT | *GT Model*
Scarabeo	125	2003	2003	TD000\TDA01	AP8104492	**122760290**	AP8104491	**122770290**	
Scarabeo	125	2004	2006	TD002\TDB01	AP8104519	**122760260**	AP8104518	**122770260**	Modello GT | *GT Model*
Scarabeo	125	2004	2006	TD002\TDB01	AP8104492	**122760290**	AP8104491	**122770290**	
Scarabeo Ie Light	125	2009	2010	RBG00\RBH00	JC56600X94000	**122760230**	JC56500X94000	**122770230**	
Scarabeo Light	125	2007	2008	RB000\RBA00	AP8104527	**122760230**	AP8104526	**122770230**	
Scarabeo Motore Piaggio Eu3	125	2006	2006	TD005\TDA03	AP8104519	**122760260**	AP8104518	**122770260**	
Scarabeo Motore Rotax	125	1999	2001	PC000\PCA00\SD000	AP8102836	**122760090**	AP8102835	**122770090**	
Scarabeo Motore Rotax	125	1999	2004	PC000\PCA00\SD000	AP8104519	**122760260**	AP8104518	**122770260**	
Scarabeo Motore Rotax	125	2002	2003	PC000\PCA00\SD000	AP8104492	**122760290**	AP8104491	**122770290**	
Scarabeo Motore Rotax	125	2004	2004	PC000\PCA00\SD000	AP8102836	**122760090**	AP8102835	**122770090**	
Sport City	125	2004	2006	VB000\VBA00	AP8104724	**122760200**	AP8104723	**122770200**	
Sport City Cube	125	2008	2010	VBE00\VBG00	AP8104724	**122760200**	AP8104723	**122770200**	
Sport City Euro3	125	2006	2008	VB002\VBA01\VBB00	AP8104724	**122760200**	AP8104723	**122770200**	
Sport City Street	125	2012	2012	VBM00	AP8104724	**122760200**	AP8104723	**122770200**	
Sr	125	1999	2001	PXA00\PXC00	AP8201976	**122760080**	AP8201975	**122770080**	
Tuono	125	2003	2004	SFD00	AP8104566	**122771230**	AP8104566	**122771230**	
Leonardo	250	1999	2001	PD000	AP8102867	**122760300**	AP8102866	**122770300**	
Leonardo St	250	2001	2001	PD010	AP8102867	**122760300**	AP8102866	**122770300**	
Rs	250	1998	2003	LDA00	AP8102633	**122760120**	AP8102632	**122770120**	
Scarabeo Light	250	2006	2008	VRB00	AP8104519	**122760260**	AP8104518	**122770260**	
Sport City Cube	250	2008	2012	VBH00\VBL00	AP8104724	**122760200**	AP8104723	**122770200**	
Leonardo	300	2002	2004	SV000\SVA00	AP8102867	**122760300**	AP8102866	**122770300**	
Scarabeo Light	300	2009	2010	VRG00	AP8104527	**122760230**	AP8104526	**122770230**	
Sport City Street	300	2012	2012	VBR00	AP8104724	**122760200**	AP8104723	**122770200**	
Scarabeo Light 400-500	400	2006	2008	VR000\VRA00	AP8104527	**122760230**	AP8104526	**122770230**	
Scarabeo Light 400-500	400	2006	2008	VR000\VRA00\VRE00	AP8104519	**122760260**	AP8104518	**122770260**	
Rxv 4.5/5.5	450	2009	2011	VPT\VPX\VPV\VPZ	AP8104922	**122761540**	AP8104921	**122771540**	
Rxv 4.5/5.5 - Sxv 4.5/5.5	450	2008	2008	VPT00\VSR00\VSS00	AP8104922	**122761540**	AP8104921	**122771540**	
Rxv 4.5/5.5 - Sxv 4.5/5.5 Pikes Peak	450	2009	2009	VPT00\VPX00\VSR00	AP8104922	**122761540**	AP8104921	**122771540**	
Rxv 4.5/5.5 - Sxv 4.5/5.5 Replica	450	2008	2008	-	AP8104922	**122761540**	AP8104921	**122771540**	
Sxv 4.5/5.5	450	2009	2011	VSR00\VSS00\VSU41	AP8104922	**122761540**	AP8104921	**122771540**	
Atlantic	500	2001	2004	PT00\VH00	AP8104454	**122760240**	AP8104453	**122770240**	
Scarabeo	500	2003	2006	RT00	AP8104527	**122760230**	AP8104526	**122770230**	



Modello *Model*	**CC**	**Da** *From*	**A** *To*	**Telaio** *Frame*	**Specchio Sinistro OEM** *Left Mirror OEM*	**Specchio Sinistro Codice RMS** *Left Mirror RMS Code*	**Specchio Destro OEM** *Right Mirror OEM*	**Specchio Destro Codice RMS** *Right Mirror RMS Code*	**Note** *Notes*
Scarabeo Light 400-500	500	2006	2008	VR000\VRA00	AP8104527	**122760230**	AP8104526	**122770230**	
Scarabeo Light 400-500	500	2006	2008	VR000\VRA00\VRE00	AP8104519	**122760260**	AP8104518	**122770260**	
Rxv 4.5/5.5 - Sxv 4.5/5.5	550	2006	2007	-	AP8104922	**122761540**	AP8104921	**122771540**	
Pegaso	650	1992	1996	GA	AP8102325	**122762020**	AP8102324	**122772020**	
Pegaso 3	650	1997	2000	ML00	AP8102325	**122762020**	AP8102324	**122772020**	
Pegaso Ie	650	2001	2004	RW000\RWA00\RWB00	AP8102325	**122762020**	AP8102324	**122772020**	
Pegaso Strada(Fun)-Factory-Trail	660	2005	2009	VD0\VDA\VDB\VDD	AP8104922	**122761540**	AP8104921	**122771540**	Modello Strada Trail | *Strada Trail Model*
Pegaso Strada(Fun)-Factory-Trail	660	2005	2009	VD0\VDA\VDB\VDD	AP8104566	**122771230**	AP8104566	**122771230**	Modello Strada | *Strada Model*
Dorsoduro	750	2008	2016	SM000\SMA00\SMC00	AP8104922	**122761540**	AP8104921	**122771540**	
Dorsoduro Factory	750	2010	2013	SMB00\SMB01	AP8104922	**122761540**	AP8104921	**122771540**	
Shiver	750	2007	2009	RA000\RAC00	AP8104922	**122761540**	AP8104921	**122771540**	
Shiver	750	2010	2016	RAE00\RAG00	AP8104922	**122761540**	AP8104921	**122771540**	
Shiver Gt	750	2009	2009	RAB00\RAD00	AP8104922	**122761540**	AP8104921	**122771540**	
Rsv	1000	1998	2000	ME00	AP8102633	**122760120**	AP8102632	**122770120**	
Rsv	1000	2001	2002	RP00\RPA0	AP8102633	**122760120**	AP8102632	**122770120**	
Rsv	1000	2003	2003	RP12	AP8102633	**122760120**	AP8102632	**122770120**	
Rsv R Tuono	1000	2002	2005	RPB00\RPB06\RPB09	AP8104566	**122771230**	AP8104566	**122771230**	
Rsv4 Racing Factory Le	1000	2015	2016	RKL00\RKL01	2B001544	**122762350**	2B001543	**122772350**	
Rsv4 Rr	1000	2015	2015	-	2B001544	**122762350**	2B001543	**122772350**	
Rsv4 Rr	1000	2016	2016	RKL00\RKL01	2B001544	**122762350**	2B001543	**122772350**	
Rsv4 Rr Racer Pack	1000	2015	2015	RKL00	2B001544	**122762350**	2B001543	**122772350**	
Sl Falco	1000	2000	2003	PA00	AP8104081	**122760120**	AP8104080	**122770120**	
Tuono R-Factory	1000	2006	2009	RRL00	AP8104922	**122761540**	AP8104921	**122771540**	
BMW									
F 650 800 Gs	650	2008	2011	E8GS/K72	51167715861	**122761330**	51167715862	**122771330**	
F 650 800 Gs	650	2011	2012	E8GS/K72	51167723405	**122762890**	51167723406	**122772890**	
F 650 800 Gs Abs	650	2008	2012	E8GS/K72	51167715861	**122761330**	51167715862	**122771330**	
G 650 Gs	650	2011	2012	E650G/R13	51167723405	**122762890**	51167723406	**122772890**	
G 650 Gs Abs	650	2012	2016	E650G/R13	51167723405	**122762890**	51167723406	**122772890**	
G 650 Gs Sertäo	650	2012	2012	E650G/R13	51167723405	**122762890**	51167723406	**122772890**	
G 650 Gs Sertäo Abs	650	2012	2014	E650G/R13	51167723405	**122762890**	51167723406	**122772890**	
F 700 800 Gs Abs	700	2013	2016	E8GS/K70	51167715861	**122761330**	51167715862	**122771330**	
K 75	750	1984	1988	75/K569	51161451523	**122771280**	51161451523	**122771280**	
K 75 /2	750	1989	1994	75/K569	51161451523	**122771280**	51161451523	**122771280**	
K 75 /2 Abs	750	1991	1994	75/K569	51161451523	**122771280**	51161451523	**122771280**	
K 75 /2 Edition	750	1996	1996	75/K569	51161451523	**122771280**	51161451523	**122771280**	
K 75 /2 Edition Abs	750	1996	1996	75/K569	51161451523	**122771280**	51161451523	**122771280**	
K 75 C	750	1985	1990	75/K569	51161451523	**122771280**	51161451523	**122771280**	
K 75 Rt	750	1989	1995	75/K569	51161451523	**122771280**	51161451523	**122771280**	
K 75 Rt Abs	750	1996	1996	75/K569	51161451523	**122771280**	51161451523	**122771280**	
K 75 S	750	1985	1995	75/K569	51161451523	**122771280**	51161451523	**122771280**	
K 75 S Abs	750	1985	1995	75/K569	51161451523	**122771280**	51161451523	**122771280**	
F 800 800 Gs	800	2008	2012	E8GS/K72	51167715861	**122761330**	51167715862	**122771330**	
F 800 800 Gs Abs	800	2008	2016	E8GS/K72	51167715861	**122761330**	51167715862	**122771330**	
F 800 800 Gt Abs	800	2013	2016	E8ST/K71	51167715861	**122761330**	51167715862	**122771330**	
F 800 800 R	800	2009	2012	E8ST/K73	51167715861	**122761330**	51167715862	**122771330**	
F 800 800 R Abs	800	2009	2014	E8ST/K73	51167715861	**122761330**	51167715862	**122771330**	
F 800 800 R Abs	800	2015	2016	K73	51167715861	**122761330**	51167715862	**122771330**	
F 800 800 S	800	2006	2010	E8ST/K71	51167714111	**122761880**	51167714112	**122771880**	
F 800 800 S Abs	800	2007	2010	E8ST/K71	51167714111	**122761880**	51167714112	**122771880**	
F 800 800 St	800	2006	2012	E8ST/K71	51167714111	**122761880**	51167714112	**122771880**	
F 800 800 St Abs	800	2007	2012	E8ST/K71	51167714111	**122761880**	51167714112	**122771880**	
R 80 /7N	800	1977	1980	247	51161451523	**122771280**	51161451523	**122771280**	



SPECCHIETTI RETROVISORI

REAR VIEW MIRRORS

Modello *Model*	**CC**	**Da** *From*	**A** *To*	**Telaio** *Frame*	**Specchio Sinistro OEM** *Left Mirror OEM*	**Specchio Sinistro Codice RMS** *Left Mirror RMS Code*	**Specchio Destro OEM** *Right Mirror OEM*	**Specchio Destro Codice RMS** *Right Mirror RMS Code*	**Note** *Notes*
R 80 /7S	800	1977	1980	247	51161451523	**122771280**	51161451523	**122771280**	
R 80 G/S Monolever	800	1980	1987	247E	51161451523	**122771280**	51161451523	**122771280**	
R 80 Gs Paralever	800	1987	1990	247E	51161451523	**122771280**	51161451523	**122771280**	
R 80 Gs Pd Paris Dakar Paralever	800	1990	1993	247E	51161451523	**122771280**	51161451523	**122771280**	
R 80 Gs/2	800	1990	1990	247E	51161451523	**122771280**	51161451523	**122771280**	
R 80 Gs/2 Paralever	800	1990	1995	247E	51161451523	**122771280**	51161451523	**122771280**	
R 80 Gs/2 Paralever Last Edition	800	1996	1998	247E	51161451523	**122771280**	51161451523	**122771280**	
R 80 Monolever	800	1984	1993	247	51161451523	**122771280**	51161451523	**122771280**	
R 80 R	800	1991	1994	247E	51161451523	**122771280**	51161451523	**122771280**	
R 80 Rt	800	1982	1984	247	51161451523	**122771280**	51161451523	**122771280**	
R 80 Rt/2 Monolever	800	1984	1995	247	51161451523	**122771280**	51161451523	**122771280**	
R 80 St	800	1982	1985	247E	51161451523	**122771280**	51161451523	**122771280**	
Hp4 1000 Abs	1000	2012	2016	K42	51167718513	**122762370**	51167718514	**122772370**	
Hp4 1000 Competition Abs	1000	2013	2016	K42	51167718513	**122762370**	51167718514	**122772370**	
K 100	1000	1982	1988	100/K589	51161451523	**122771280**	51161451523	**122771280**	
K 100 /2	1000	1987	1990	100/K589	51161451523	**122771280**	51161451523	**122771280**	
K 100 /2 Abs	1000	1987	1990	100/K589	51161451523	**122771280**	51161451523	**122771280**	
K 100 Lt	1000	1986	1991	100/K589	51161451523	**122771280**	51161451523	**122771280**	
K 100 Lt Abs	1000	1986	1991	100/K589	51161451523	**122771280**	51161451523	**122771280**	
K 100 Rs	1000	1983	1989	100/K589	51161451523	**122771280**	51161451523	**122771280**	
K 100 Rs Abs	1000	1983	1989	100/K589	51161451523	**122771280**	51161451523	**122771280**	
K 100 Rs4V	1000	1989	1992	100/K589VV	51161451523	**122771280**	51161451523	**122771280**	
K 100 Rs4V Abs	1000	1989	1992	100/K589VV	51161451523	**122771280**	51161451523	**122771280**	
K 100 Rt	1000	1983	1989	100/K589	51161451523	**122771280**	51161451523	**122771280**	
K 100 Rt Abs	1000	1983	1989	100/K589	51161451523	**122771280**	51161451523	**122771280**	
S 1000 R Abs	1000	2013	2016	K47	51167715861	**122761330**	51167715862	**122771330**	
S 1000 Rr	1000	2009	2014	K10/K46	51167718513	**122762370**	51167718514	**122772370**	
S 1000 Rr Abs	1000	2009	2016	K10/K46	51167718513	**122762370**	51167718514	**122772370**	
S 1000 Xr Abs	1000	2015	2019	K10/K49	51168567447	**122761330**	51168567448	**122771330**	
S 1000 Xr Abs Dtc	1000	2017	2019	K49	51168567447	**122761330**	51168567448	**122771330**	
S 1000 Xr Abs Esa	1000	2017	2019	K49	51168567447	**122761330**	51168567448	**122771330**	
K 1200 R 55 Inch Rim	1200	2005	2008	K12R/K43	71607699091	**122772200**	71607699091	**122772200**	
K 1200 R 55 Inch Rim Abs	1200	2005	2008	K12R/K43	71607699091	**122772200**	71607699091	**122772200**	
K 1200 R 60 Inch Rim	1200	2005	2008	K12R/K43	71607699091	**122772200**	71607699091	**122772200**	
K 1200 R 60 Inch Rim Abs	1200	2005	2008	K12R/K43	71607699091	**122772200**	71607699091	**122772200**	
K 1200 R Sport 55 Inch Rim	1200	2007	2011	K12R/K43HV	71607699091	**122772200**	71607699091	**122772200**	
K 1200 R Sport 55 Inch Rim Abs	1200	2007	2011	K12R/K43HV	71607699091	**122772200**	71607699091	**122772200**	
K 1200 R Sport 60 Inch Rim	1200	2007	2011	K12R/K43HV	71607699091	**122772200**	71607699091	**122772200**	
K 1200 R Sport 60 Inch Rim Abs	1200	2007	2011	K12R/K43HV	71607699091	**122772200**	71607699091	**122772200**	
R 1200 Gs Adventure	1200	2006	2013	R12/K255	51167697241	**122771320**	51167697241	**122771320**	
R 1200 Gs Adventure Abs	1200	2006	2013	R12/K255	51167697241	**122771320**	51167697241	**122771320**	
R 1200 Gs Cast Wheel	1200	2004	2012	R12/K25	51167697241	**122771320**	51167697241	**122771320**	
R 1200 Gs Cast Wheel Abs	1200	2004	2012	R12/K25	51167697241	**122771320**	51167697241	**122771320**	
R 1200 Gs Lc Abs	1200	2013	2017	R12W/K50	51168567447	**122761330**	51168567448	**122771330**	
R 1200 Gs Lc Adventure Abs	1200	2014	2018	R12W/K51	51168567447	**122761330**	51168567448	**122771330**	
R 1200 Gs Lc Adventure Abs	1200	2017	2018	1G12/K51	51168567447	**122761330**	51168567448	**122771330**	



Modello *Model*	CC	Da *From*	A *To*	Telaio *Frame*	Specchio Sinistro OEM *Left Mirror OEM*	Specchio Sinistro Codice RMS *Left Mirror RMS Code*	Specchio Destro OEM *Right Mirror OEM*	Specchio Destro Codice RMS *Right Mirror RMS Code*	Note *Notes*
R 1200 Gs Lc Adventure Abs Dtc	1200	2017	2018	1G12/K51	51168567447	**122761330**	51168567448	**122771330**	
R 1200 Gs Lc Adventure Triple Black Abs Esa	1200	2017	2018	1G12/K51	51168567447	**122761330**	51168567448	**122771330**	
R 1200 Gs Lc Exclusive Abs	1200	2017	2018	1G12/K51	51168567447	**122761330**	51168567448	**122771330**	
R 1200 Gs Lc Exclusive Dtc Abs	1200	2017	2018	1G12/K51	51168567447	**122761330**	51168567448	**122771330**	
R 1200 Gs Lc Exclusive Esa Abs	1200	2017	2018	1G12/K51	51168567447	**122761330**	51168567448	**122771330**	
R 1200 Gs Lc Rally Abs	1200	2017	2018	1G12/K50	51168567447	**122761330**	51168567448	**122771330**	
R 1200 Gs Lc Rally Dtc Abs	1200	2017	2018	1G12/K50	51168567447	**122761330**	51168567448	**122771330**	
R 1200 Gs Lc Rally Esa Abs	1200	2017	2018	1G12/K50	51168567447	**122761330**	51168567448	**122771330**	
R 1200 Gs Lc Speichenrad Abs	1200	2014	2017	R12W/K50	51168567447	**122761330**	51168567448	**122771330**	
R 1200 Ninet Abs	1200	2013	2018	R1ST/K21	51168567447	**122761330**	51168567448	**122771330**	
R 1200 Ninet Pure Abs	1200	2017	2018	K22	51168567447	**122761330**	51168567448	**122771330**	
R 1200 R	1200	2006	2010	K27/R1ST	51167697241	**122771320**	51167697241	**122771320**	
R 1200 R	1200	2011	2014	K27/R1ST	51167685505	**122771350**	51167685505	**122771350**	
R 1200 R Abs	1200	2006	2010	K27/R1ST	51167697241	**122771320**	51167697241	**122771320**	
R 1200 R Abs	1200	2011	2014	K27/R1ST	51167685505	**122771350**	51167685505	**122771350**	
R 1200 R Classic Abs	1200	2011	2012	K27	51167686618	**122772220**	51167686618	**122772220**	
R 1200 Rs Lc Abs	1200	2015	2017	K54	51168556083	**122762380**	51168556084	**122772380**	
R 1200 Rs Lc Abs	1200	2018	2018	-	51168556083	**122762380**	51168556084	**122772380**	
R 1200 Rs Lc Abs Dtc	1200	2017	2018	K54	51168556083	**122762380**	51168556084	**122772380**	
R 1200 Rs Lc Abs Esa	1200	2015	2017	K54	51168556083	**122762380**	51168556084	**122772380**	
R 1200 Rs Lc Abs Esa	1200	2018	2018	-	51168556083	**122762380**	51168556084	**122772380**	
R 1200 St	1200	2005	2008	K28/R1ST	51167688656	**122761870**	51167688655	**122771870**	
R 1200 St Abs	1200	2005	2008	K28/R1ST	51167688656	**122761870**	51167688655	**122771870**	
R 1250 Gs Abs	1250	2019	2019	1G13	51168567447	**122761330**	51168567448	**122771330**	
R 1250 Gs Adventure Abs	1250	2019	2019	1G13	51168567447	**122761330**	51168567448	**122771330**	
K 1300 R 55 Inch Rim	1300	2009	2016	K43/K12S	51167685505	**122771350**	51167685505	**122771350**	
K 1300 R 55 Inch Rim Abs	1300	2009	2016	K43/K12S	51167685505	**122771350**	51167685505	**122771350**	
K 1300 R 60 Inch Rim	1300	2009	2016	K43/K12S	51167685505	**122771350**	51167685505	**122771350**	
K 1300 R 60 Inch Rim Abs	1300	2009	2016	K43/K12S	51167685505	**122771350**	51167685505	**122771350**	
DERBI									
Boulevard 2T	50	2009	2014	BR1A1A	CM027004	**122760530**	CM027005	**122770530**	
Boulevard 4T Eu2 25 Km/h	50	2009	2009	-	CM027004	**122760530**	CM027005	**122770530**	
Sonar 2T	50	2009	2009	LR1A1A	CM020407	**122760830**	-	**-**	
Boulevard 4T	100	2010	2011	M57A00	CM027001	**122760530**	CM027002	**122770530**	
Boulevard 4T Eu3	125	2008	2012	VTHM571	CM027004	**122760530**	CM027005	**122770530**	
Sonar 4T	125	2009	2011	LS1A1A	CM020407	**122760830**	CM020408	**122770830**	
Boulevard 4T E3	150	2010	2010	M57200	CM027001	**122760530**	CM027002	**122770530**	
Sonar 4T	150	2009	2009	LS3A1A	CM020407	**122760830**	CM020408	**122770830**	
DUCATI									
Monster 400	400	2004	2008	M407AA	52340153A	**122761370**	52340143A	**122771370**	
Monster 400 Dark	400	2005	2005	M407AA	52340153A	**122761370**	52340143A	**122771370**	
Monster 620	620	2004	2004	M403AC	52340153A	**122761370**	52340143A	**122771370**	
Monster 620	620	2005	2005	M408AA	52340153A	**122761370**	52340143A	**122771370**	
Monster 620	620	2006	2006	M403AC	52340153A	**122761370**	52340143A	**122771370**	
Monster 620 Dark	620	2005	2006	M408AA	52340153A	**122761370**	52340143A	**122771370**	
Monster 620 Dark Single Disc	620	2005	2005	M403AC	52340153A	**122761370**	52340143A	**122771370**	



SPECCHIETTI RETROVISORI

REAR VIEW MIRRORS

Modello *Model*	**CC**	**Da** *From*	**A** *To*	**Telaio** *Frame*	**Specchio Sinistro OEM** *Left Mirror OEM*	**Specchio Sinistro Codice RMS** *Left Mirror RMS Code*	**Specchio Destro OEM** *Right Mirror OEM*	**Specchio Destro Codice RMS** *Right Mirror RMS Code*	**Note** *Notes*
Monster 695	695	2007	2008	M419AA	52340153A	**122761370**	52340143A	**122771370**	
Monster 696	700	2008	2012	M500AA\M501AA	52340232A	**122761380**	52340222A	**122771380**	
Monster 696 Abs	700	2010	2012	M503AA\M504AA	52340232A	**122761380**	52340222A	**122771380**	
Monster 796	800	2011	2012	M506AA	52340232A	**122761380**	52340222A	**122771380**	
Monster 796 Abs	800	2011	2012	M506AB	52340232A	**122761380**	52340222A	**122771380**	
Monster 800	800	2004	2004	M406AA	52340153A	**122761370**	52340143A	**122771370**	
Monster S2R 800	800	2005	2006	M414AA	52340153A	**122761370**	52340143A	**122771370**	
Monster S2R 800	800	2007	2007	M421AA	52340153A	**122761370**	52340143A	**122771370**	
Monster S2R 800 Dark	800	2005	2006	M414AA	52340153A	**122761370**	52340143A	**122771370**	
Scrambler Classic	800	2015	2016	-	52310481B	**122762400**	52310491B	**122772400**	
Scrambler Classic	800	2017	2017	-	52310482B	**122762400**	52310492B	**122772400**	
Scrambler Full Throttle	800	2015	2017	-	52310481B	**122762400**	52310491B	**122772400**	
Scrambler Icon	800	2015	2016	-	52310481B	**122762400**	52310491B	**122772400**	
Scrambler Icon	800	2017	2017	-	52310482B	**122762400**	52310492B	**122772400**	
Scrambler Urban Enduro	800	2015	2016	-	52310481B	**122762400**	52310491B	**122772400**	
Monster 821	821	2015	2016	-	52310452A	**122762390**	52310442A	**122772390**	
Monster 821	821	2017	2017	-	52310451B	**122762390**	52310441B	**122772390**	
Monster 821 Dark	821	2015	2016	-	52310452A	**122762390**	52310442A	**122772390**	
Monster 821 Stripes	821	2015	2016	-	52310452A	**122762390**	52310442A	**122772390**	
Monster 821 Stripes	821	2017	2017	-	52310451B	**122762390**	52310441B	**122772390**	
Streetfighter 848	850	2012	2012	MF102AA\3AA	52340232A	**122761380**	52340222A	**122771380**	
Streetfighter 848	850	2013	2013	-	52340232A	**122761380**	52340222A	**122771380**	
Streetfighter 848	850	2014	2014	-	69927021A	**122761380**	69927011A	**122771380**	
Streetfighter 848	850	2015	2015	-	69927021A	**122761380**	69927011A	**122771380**	
Superbike 899 Panigale Abs	899	2014	2014	-	523S0292B	**122762420**	523S0282B	**122772420**	
Superbike 899 Panigale Abs	899	2015	2015	-	523S0293B	**122762420**	523S0283B	**122772420**	
Monster S4R	996	2003	2004	M400AA	52340151A	**122761370**	52340141A	**122771370**	
Monster S4R	996	2005	2006	M405AA	52340151A	**122761370**	52340141A	**122771370**	
Monster 1000	1000	2004	2004	M400AA	52340153A	**122761370**	52340143A	**122771370**	
Monster 1000	1000	2005	2005	M404AA	52340153A	**122761370**	52340143A	**122771370**	
Monster 1000 S	1000	2005	2005	M404AA	52340151A	**122761370**	52340141A	**122771370**	
Monster S2R 1000	1000	2006	2008	M416AA	52340153A	**122761370**	52340143A	**122771370**	
Monster S4R	1000	2007	2008	4417AA	52340153A	**122761370**	52340143A	**122771370**	
Monster S4Rs	1000	2006	2006	4417AA	52340151A	**122761370**	52340141A	**122771370**	
Monster S4Rs	1000	2007	2008	4417AA	52340153A	**122761370**	52340143A	**122771370**	
Monster S4Rs Tricolore	1000	2008	2008	4417AA	52340153A	**122761370**	52340143A	**122771370**	
Monster 1100	1100	2009	2010	M502AA	52340232A	**122761380**	52340222A	**122771380**	
Monster 1100 Abs	1100	2010	2010	M505AA	52340232A	**122761380**	52340222A	**122771380**	
Monster 1100 Evo Abs	1100	2012	2012	-	52340232A	**122761380**	52340222A	**122771380**	
Monster 1100 S	1100	2009	2010	M502AA	52340232A	**122761380**	52340222A	**122771380**	
Monster 1100 S Abs	1100	2010	2010	M502AA	52340232A	**122761380**	52340222A	**122771380**	
Streetfighter	1100	2010	2010	F100AA	52340232A	**122761380**	52340222A	**122771380**	
Streetfighter	1100	2011	2011	F100AA\F101AA	52340232A	**122761380**	52340222A	**122771380**	
Streetfighter S	1100	2010	2010	F100AA	52340232A	**122761380**	52340222A	**122771380**	
Streetfighter S	1100	2011	2012	F100AA\F101AA	52340232A	**122761380**	52340222A	**122771380**	
Monster 1200	1200	2015	2015	-	52310452A	**122762390**	52310442A	**122772390**	
Monster 1200 S	1200	2015	2015	-	52310452A	**122762390**	52310442A	**122772390**	
Monster 1200 S Stripes	1200	2015	2015	-	52310452A	**122762390**	52310442A	**122772390**	
Multistrada 1200	1200	2010	2010	A200AA	52310341A	**122761900**	52310351A	**122771900**	
Multistrada 1200	1200	2011	2012	A200AA\A201AA	52310341A	**122761900**	52310351A	**122771900**	
Multistrada 1200 Abs	1200	2010	2010	A200AB	52310341A	**122761900**	52310351A	**122771900**	



Modello *Model*	CC	Da *From*	A *To*	Telaio *Frame*	Specchio Sinistro OEM *Left Mirror OEM*	Specchio Sinistro Codice RMS *Left Mirror RMS Code*	Specchio Destro OEM *Right Mirror OEM*	Specchio Destro Codice RMS *Right Mirror RMS Code*	Note *Notes*
Multistrada 1200 Abs	1200	2011	2012	A200AB\A201AB	52310341A	**122761900**	52310351A	**122771900**	
Multistrada 1200 Abs	1200	2013	2014	-	52310341A	**122761900**	52310351A	**122771900**	
Multistrada 1200 Abs	1200	2015	2016	-	52310472A	**122762410**	52310462A	**122772410**	
Multistrada 1200 Abs	1200	2015	2017	-	52310471B	**122762410**	52310461B	**122772410**	
Multistrada 1200 Abs Sport Pack	1200	2018	2018	-	52310472B	**122762410**	52310462B	**122772410**	
Multistrada 1200 S Abs	1200	2010	2010	A200AD	52310341A	**122761900**	52310351A	**122771900**	
Multistrada 1200 S Abs	1200	2015	2016	-	52310472A	**122762410**	52310462A	**122772410**	
Multistrada 1200 S Abs	1200	2015	2017	-	52310471B	**122762410**	52310461B	**122772410**	
Multistrada 1200 S D-Air	1200	2016	2016	-	52310472A	**122762410**	52310462A	**122772410**	
Multistrada 1200 S D-Air	1200	2016	2017	-	52310471B	**122762410**	52310461B	**122772410**	
Multistrada 1200 S Gt	1200	2013	2014	-	52310341A	**122761900**	52310351A	**122771900**	
Multistrada 1200 S Pikes Peak	1200	2012	2012	A200AE\A201AE	52310341A	**122761900**	52310351A	**122771900**	
Multistrada 1200 S Pikes Peak	1200	2013	2014	-	52310341A	**122761900**	52310351A	**122771900**	
Multistrada 1200 S Pikes Peak	1200	2016	2016	-	52310472A	**122762410**	52310462A	**122772410**	
Multistrada 1200 S Pikes Peak	1200	2016	2017	-	52310471B	**122762410**	52310461B	**122772410**	
Multistrada 1200 S Sport	1200	2011	2012	A200AD\A201AD	52310341A	**122761900**	52310351A	**122771900**	
Multistrada 1200 S Touring	1200	2010	2010	A200AC	52310341A	**122761900**	52310351A	**122771900**	
Multistrada 1200 S Touring	1200	2011	2012	A200AC\A201AC	52310341A	**122761900**	52310351A	**122771900**	
Multistrada 1200 S Touring	1200	2013	2014	-	52310341A	**122761900**	52310351A	**122771900**	
Multistrada 1200 S Touring	1200	2015	2016	-	52310472A	**122762410**	52310462A	**122772410**	
Multistrada 1200 S Touring	1200	2015	2017	-	52310471B	**122762410**	52310461B	**122772410**	
Multistrada 1200 S Touring D-Air	1200	2014	2014	-	52310341A	**122761900**	52310351A	**122771900**	
Multistrada 1200 Touring	1200	2015	2016	-	52310472A	**122762410**	52310462A	**122772410**	
Multistrada 1200 Touring	1200	2015	2017	-	52310471B	**122762410**	52310461B	**122772410**	
Superbike 1199 Panigale Abs	1200	2014	2014	-	523S0292B	**122762420**	523S0283B	**122772420**	
Superbike 1199 Panigale R	1200	2013	2014	-	523S0292B	**122762420**	523S0282B	**122772420**	
Superbike 1199 Panigale S Abs	1200	2014	2014	-	523S0292B	**122762420**	523S0282B	**122772420**	
Superbike 1199 Panigale S Abs	1200	2015	2015	-	523S0293B	**122762420**	523S0283B	**122772420**	
Superbike 1199 Panigale Superl	1200	2014	2014	-	523S0293B	**122762420**	523S0283B	**122772420**	
GILERA									
Dna	50	2000	2002	C2700	583111	**122760980**	583111	**122760980**	
Dna	50	2005	2007	C2700	583111	**122760980**	583111	**122760980**	
Dna Gp Experience	50	2003	2004	C2700	583111	**122760980**	583111	**122760980**	
Easy Moving	50	1995	1996	SSP2T	563492	**122760700**	563496	**122770700**	
Ice	50	2001	2005	C3000	CM066002	**122760940**	CM066001	**122770940**	
Runner	50	1997	2000	C1400	CM068001	**122760330**	CM068002	**122770330**	
Runner Poggiali	50	2002	2002	C3620	CM068001	**122760330**	CM068002	**122770330**	
Runner Purejet	50	2002	2004	C36100	CM068001	**122760330**	CM068002	**122770330**	
Runner Purejet	50	2005	2007	C46200	CM073001	**122760420**	CM073002	**122770420**	
Runner Purejet	50	2010	2011	C46200	CM073001	**122760420**	CM073002	**122770420**	



SPECCHIETTI RETROVISORI

REAR VIEW MIRRORS

Modello *Model*	**CC**	**Da** *From*	**A** *To*	**Telaio** *Frame*	**Specchio Sinistro OEM** *Left Mirror OEM*	**Specchio Sinistro Codice RMS** *Left Mirror RMS Code*	**Specchio Destro OEM** *Right Mirror OEM*	**Specchio Destro Codice RMS** *Right Mirror RMS Code*	**Note** *Notes*
Runner Purejet St	50	2008	2008	C46200	CM175016	**122760750**	CM175017	**122770750**	
Runner Sp	50	2002	2004	C3640	CM068001	**122760330**	CM068002	**122770330**	
Runner Sp	50	2005	2007	C46100	CM073001	**122760420**	CM073002	**122770420**	
Runner Sp	50	2010	2012	C46100	CM073001	**122760420**	CM073002	**122770420**	
Runner Sp Special Edition	50	2007	2007	C46100	CM073001	**122760420**	CM073002	**122770420**	
Runner Sp St & Simoncelli	50	2008	2009	C46100	CM175016	**122760750**	CM175017	**122770750**	
Stalker	50	1997	2004	C1300	560897	**122760730**	561168	**122770730**	
Stalker	50	2005	2011	C40100	560897	**122760730**	561168	**122770730**	
Stalker Naked	50	2008	2008	C40102	CM175008	**122760630**	CM175007	**122770630**	
Stalker Special Edition	50	2007	2008	C40100	560897	**122760730**	561168	**122770730**	
Storm	50	1994	1995	TEC1T	271022	**122760060**	271018	**122770060**	
Storm Euro2	50	2007	2007	C29000	CM073001	**122760420**	CM073002	**122770420**	
Typhoon	50	1994	1997	TEC1T	271022	**122760060**	271018	**122770060**	
Typhoon X	50	1998	1999	TEC2T	271022	**122760060**	-	**-**	
Typhoon Xr	50	2000	2000	C1900	271022	**122760060**	-	**-**	
Dna 125-180	125	2001	2001	M2600	583111	**122760980**	583111	**122760980**	
Nexus Euro3	125	2007	2008	M35500	CM175002	**122760640**	CM175003	**122770640**	Con adattatore I *With adaptor*
Nexus Euro3	125	2007	2008	M35500	CM175005	**122760650**	CM175006	**122770650**	
Nexus Euro3 Ie	125	2008	2010	M35700	CM175005	**122760650**	CM175006	**122770650**	
Runner 4T St Euro3	125	2008	2013	M46301	CM073001	**122760420**	CM073002	**122770420**	
Runner 4T St Euro3	125	2008	2013	M46301	CM175016	**122760750**	CM175017	**122770750**	
Runner Vx	125	2005	2006	M46100	CM073001	**122760420**	CM073002	**122770420**	
Runner Vx 4T Euro3	125	2006	2007	M46300	CM073001	**122760420**	CM073002	**122770420**	
Runner Vx Race	125	2006	2006	M46100	CM073001	**122760420**	CM073002	**122770420**	
Runner Vx Sc	125	2006	2007	M46100	CM073001	**122760420**	CM073002	**122770420**	
Runner Vx-Vxr 125-200	125	2002	2004	M240\241\243	CM068001	**122760330**	CM068002	**122770330**	
Typhoon	125	1995	1998	M0200	271022	**122760060**	271018	**122770060**	
Typhoon X-Xr	125	1999	2000	M0200	271022	**122760060**	271018	**122770060**	
Dna 125-180	180	2001	2001	M2600	583111	**122760980**	583111	**122760980**	
Runner Fx-Fxr 125-180	180	1997	2002	M070\080	CM068001	**122760330**	CM068002	**122770330**	
Runner Vx-Vxr 125-180	180	2000	2001	M2400	CM068001	**122760330**	CM068002	**122770330**	
Runner Vxr	200	2005	2006	M46200	CM073001	**122760420**	CM073002	**122770420**	
Runner Vxr 4T St Euro3	200	2008	2011	M46401	CM073001	**122760420**	CM073002	**122770420**	
Runner Vxr 4T St Euro3	200	2008	2011	M46401	CM175016	**122760750**	CM175017	**122770750**	
Runner Vxr Euro3	200	2007	2007	M46400	CM073001	**122760420**	CM073002	**122770420**	
Runner Vxr Race	200	2005	2006	M46200	CM073001	**122760420**	CM073002	**122770420**	
Runner Vx-Vxr 125-200	200	2002	2004	M240\241\243	CM068001	**122760330**	CM068002	**122770330**	
Nexus Euro3	250	2007	2007	M35400	CM175002	**122760640**	CM175003	**122770640**	
Nexus Euro3	300	2008	2011	M35600	CM175005	**122760650**	CM175006	**122770650**	
Fuoco 4T-4V Ie E3 Lt	500	2013	2014	M61100	CM175008	**122760630**	CM175007	**122770630**	
Fuoco Euro3	500	2007	2013	M61100	CM175008	**122760630**	CM175007	**122770630**	
Nexus Euro3	500	2009	2011	M35200	CM175005	**122760650**	CM175006	**122770650**	
HERCULES									
Limbo 25 Ma	25	1995	1995	423	-	**122762750**	-	**122772750**	
Reggae 50	50	1995	1995	427	-	**122762750**	-	**122772750**	
HONDA									
Nsc 110 Mpd Vision	110	2012	2013	JF31B	82220-GFM-B20	**122761050**	82210-GFM-B20	**122771050**	
Nsc 110 Mpd Vision	110	2014	2015	JF53B	82220-GFM-B20	**122761050**	82210-GFM-B20	**122771050**	
Nsc 110 Mpd Vision	110	2016	2016	-	82220-GFM-B20	**122761050**	82210-GFM-B20	**122771050**	
Cb 125 F	125	2015	2016	JC64A	88220-KPN-A71	**122762590**	88210-KPN-A71	**122772590**	



Modello *Model*	CC	Da *From*	A *To*	Telaio *Frame*	Specchio Sinistro OEM *Left Mirror OEM*	Specchio Sinistro Codice RMS *Left Mirror RMS Code*	Specchio Destro OEM *Right Mirror OEM*	Specchio Destro Codice RMS *Right Mirror RMS Code*	Note *Notes*
Cb 125 F Cbs	125	2017	2017	JC74A	88220-KPN-A71	**122762590**	88210-KPN-A71	**122772590**	
Cb 125 F Cbs	125	2018	2018	-	88220-KPN-A71	**122762590**	88210-KPN-A71	**122772590**	
Cbf 125 M	125	2009	2016	JC40A	88120-KWF-951	**122762270**	88110-MWF-951	**122772270**	
Fes 125 Pantheon Cbs	125	2003	2007	JF12A	88220-KPR-900	**122760030**	88210-KPR-900	**122770030**	
Nes 125 @/ Arobase	125	2000	2006	JF07A	88220-KGF-900	**122760350**	88210-KGF-900	**122770350**	
Pcx 125 Ww125	125	2013	2013	JF47E	88220-KWN-900	**122761060**	88210-KWN-900	**122771060**	
Pcx 125 Ww125Ex2	125	2010	2014	JF28A	88220-KWN-900	**122761060**	88210-KWN-900	**122771060**	
Pcx 125 Ww125Ex2	125	2015	2015	JF57A	88220-KWN-900	**122761060**	88210-KWN-900	**122771060**	
Pes 125 Ps I	125	2006	2013	JF17A	88220-KPR-900	**122760030**	88210-KPR-900	**122770030**	
Ses 125 Dylan	125	2002	2006	JF10A	88220-KPR-900	**122760030**	88210-KPR-900	**122770030**	
Sh 125	125	2001	2004	JF09A	88220-KPR-900	**122760030**	88210-KPR-900	**122770030**	
Sh 125 A I Abs	125	2013	2015	JF41B	88220-K01-D01	**122761130**	88210-K01-D01	**122771130**	
Sh 125 A I Abs	125	2016	2016	JF41A	88220-K01-D01	**122761130**	88210-K01-D01	**122771130**	
Sh 125 Ad I Abs	125	2017	2019	JF68B	88220-K77-D00	**122762920**	88210-K77-D00	**122772920**	
Sh 125 Anc I Mode	125	2014	2016	JF51A	88220-K29-901	**122761550**	88210-K29-901	**122771550**	
Sh 125 Anc I Mode	125	2017	2018	JF71A	88220-K29-901	**122761550**	88210-K29-901	**122771550**	
Sh 125 I	125	2005	2008	JF14A	88220-KPR-900	**122760030**	88210-KPR-900	**122770030**	
Sh 125 I	125	2010	2012	JF23B	88220-KTW-900	**122762720**	88210-KPR-900	**122770030**	
Sh 125 I	125	2016	2016	JF41A	88220-K01-D01	**122761130**	88210-K01-D01	**122771130**	
Nes 150 @/ Arobase	150	2000	2006	KF03A	88220-KGF-900	**122760350**	88210-KGF-900	**122770350**	
Pes 150 Ps I	150	2006	2010	KF09A	88220-KPR-900	**122760030**	88210-KPR-900	**122770030**	
Sh 150	150	2001	2004	KF04A	88220-KPR-900	**122760030**	88210-KPR-900	**122770030**	
Sh 150 A I Abs	150	2013	2016	KF13B	88220-K01-D01	**122761130**	88210-K01-D01	**122771130**	
Sh 150 Ad I Abs	150	2017	2019	KF23A	88220-K77-D00	**122762920**	88210-K77-D00	**122772920**	
Sh 150 I	150	2005	2008	KF08A	88220-KPR-900	**122760030**	88210-KPR-900	**122770030**	
Cbr 250 R	250	2011	2014	MC41A	88120-K33-D01	**122762430**	88110-K33-D01	**122772430**	
Cbr 250 Ra Abs	250	2011	2015	MC41B	88120-K33-D01	**122762430**	88110-K33-D01	**122772430**	
Nss 250 A Forza Abs	250	2008	2011	MF10B	88220-MCT-692	**122762910**	88210-MCT-692	**122772910**	
Nss 250 Ex Forza Abs	250	2005	2013	MF08B	88220-MCT-692	**122762910**	88210-MCT-692	**122772910**	
Nss 250 X Forza	250	2005	2013	MF08A	88220-MCT-692	**122762910**	88210-MCT-692	**122772910**	
Cbr 300 Ra Abs	300	2014	2017	NC51B	88120-K33-D01	**122762430**	88110-K33-D01	**122772430**	
Nss 300 A Forza Abs	300	2013	2017	NF04B	88220-K04-930	**122761190**	88210-K04-930	**122771190**	
Nss 300 Forza	300	2013	2017	NF04A	88220-K04-930	**122761190**	88210-K04-930	**122771190**	
Sh 300 A I Abs	300	2007	2010	NF02B	88220-KTW-900	**122762720**	88210-KPR-900	**122770030**	
Sh 300 A I Abs	300	2011	2015	NF02D	88220-KTW-900	**122762720**	88210-KPR-900	**122770030**	
Sh 300 A I Abs	300	2016	2016	NF05A	88220-KTW-900	**122762720**	88210-KPR-900	**122770030**	
Sh 300 I	300	2008	2010	NF02A	88220-KTW-900	**122762720**	88210-KPR-900	**122770030**	
Fjs 400 A Sw-T Abs	400	2009	2016	NF03B	88220-MCT-692	**122762910**	88210-MCT-692	**122772910**	
Fjs 400 D Sw-T	400	2009	2009	NF03A	88220-MCT-692	**122762910**	88210-MCT-692	**122772910**	
Cb 500 S Sport	500	1998	2003	PC32E	88220-MY5-F10	**122761930**	88210-MY5-F10	**122771930**	
Cb 500 S Sport	500	1998	2003	PC32F	88220-MY5-F10	**122761930**	88210-MY5-F10	**122771930**	
Cb 500 S Sport	500	1998	2003	PC32G	88220-MY5-F10	**122761930**	88210-MY5-F10	**122771930**	
Cbf 500	500	2004	2008	PC39C	88220-MBZ-K01	**122762930**	88210-MBZ-K01	**122772930**	
Cbf 500	500	2004	2008	PC39D	88220-MBZ-K01	**122762930**	88210-MBZ-K01	**122772930**	
Cbf 500 A Abs	500	2004	2008	PC39A	88220-MBZ-K01	**122762930**	88210-MBZ-K01	**122772930**	
Cbf 500 A Abs	500	2004	2008	PC39B	88220-MBZ-K01	**122762930**	88210-MBZ-K01	**122772930**	
Cbr 500 Ra Abs	500	2013	2016	PC44B	88120-MGZ-J01	**122762460**	88110-MGZ-J01	**122772460**	
Cb 600 F Hornet	600	2003	2004	PC36B	88220-MBZ-K00	**122761500**	88210-MBZ-K00	**122771500**	
Cb 600 F Hornet	600	2003	2006	PC36A	88220-MBZ-K00	**122761500**	88210-MBZ-K00	**122771500**	
Cb 600 F Hornet	600	2003	2006	PC36D	88220-MBZ-K00	**122761500**	88210-MBZ-K00	**122771500**	
Cb 600 F Hornet	600	2007	2010	PC41A	88120-MFG-D00	**122760280**	88110-MFG-D00	**122770280**	
Cb 600 F Hornet	600	2007	2010	PC41B	88120-MFG-D00	**122760280**	88110-MFG-D00	**122770280**	
Cb 600 F Hornet	600	2011	2012	PC41E	88120-MFG-D00	**122760280**	88110-MFG-D00	**122770280**	
Cb 600 F Hornet	600	2013	2015	PC4151	88120-MFG-D00	**122760280**	88110-MFG-D00	**122770280**	
Cb 600 Fa Hornet Abs	600	2007	2010	PC41C	88120-MFG-D00	**122760280**	88110-MFG-D00	**122770280**	



SPECCHIETTI RETROVISORI

REAR VIEW MIRRORS

Modello *Model*	**CC**	**Da** *From*	**A** *To*	**Telaio** *Frame*	**Specchio Sinistro OEM** *Left Mirror OEM*	**Specchio Sinistro Codice RMS** *Left Mirror RMS Code*	**Specchio Destro OEM** *Right Mirror OEM*	**Specchio Destro Codice RMS** *Right Mirror RMS Code*	**Note** *Notes*
Cb 600 Fa Hornet Abs	600	2007	2010	PC41D	88120-MFG-D00	**122760280**	88110-MFG-D00	**122770280**	
Cb 600 Fa Hornet Abs	600	2011	2012	PC41F	88120-MFG-D00	**122760280**	88110-MFG-D00	**122770280**	
Cb 600 Fa Hornet Abs	600	2011	2012	PC41H	88120-MFG-D00	**122760280**	88110-MFG-D00	**122770280**	
Cb 600 Fa Hornet Abs	600	2013	2015	PC4151	88120-MFG-D00	**122760280**	88110-MFG-D00	**122770280**	
Cb 600 S F2 Hornet S	600	2000	2001	PC34E	88120-MBW-003	**122761250**	88110-MBW-003	**122771250**	
Cb 600 S F2 Hornet S	600	2000	2001	PC34F	88120-MBW-003	**122761250**	88110-MBW-003	**122771250**	
Cb 600 S F2 Hornet S	600	2000	2001	PC34H	88120-MBW-003	**122761250**	88110-MBW-003	**122771250**	
Cb 600 S F2 Hornet S	600	2002	2003	PC36E	88120-MBW-003	**122761250**	88110-MBW-003	**122771250**	
Cb 600 S F2 Hornet S	600	2002	2003	PC36F	88120-MBW-003	**122761250**	88110-MBW-003	**122771250**	
Cb 600 S F2 Hornet S	600	2002	2003	PC36H	88120-MBW-003	**122761250**	88110-MBW-003	**122771250**	
Cbf 600 N	600	2004	2007	PC38E	88220-MBZ-K01	**122762930**	88210-MBZ-K01	**122772930**	
Cbf 600 N	600	2004	2007	PC38G	88220-MBZ-K01	**122762930**	88210-MBZ-K01	**122772930**	
Cbf 600 N	600	2008	2010	PC43E	88220-MBZ-K01	**122762930**	88210-MBZ-K01	**122772930**	
Cbf 600 N	600	2008	2010	PC43G	88220-MBZ-K01	**122762930**	88210-MBZ-K01	**122772930**	
Cbf 600 Na Abs	600	2004	2007	PC38F	88220-MBZ-K01	**122762930**	88210-MBZ-K01	**122772930**	
Cbf 600 Na Abs	600	2004	2007	PC38H	88220-MBZ-K01	**122762930**	88210-MBZ-K01	**122772930**	
Cbf 600 Na Abs	600	2008	2012	PC43H	88220-MBZ-K01	**122762930**	88210-MBZ-K01	**122772930**	
Cbf 600 Na Abs	600	2008	2013	PC43F	88220-MBZ-K01	**122762930**	88210-MBZ-K01	**122772930**	
Cbf 600 S	600	2004	2005	PC38A	88120-MER-D00	**122762040**	88110-MER-D00	**122772040**	
Cbf 600 S	600	2004	2005	PC38C	88120-MER-D00	**122762040**	88110-MER-D00	**122772040**	
Cbf 600 S	600	2006	2007	PC38A	88120-MER-R01	**122762170**	88110-MER-R01	**122772170**	
Cbf 600 S	600	2006	2007	PC38C	88120-MER-R01	**122762170**	88110-MER-R01	**122772170**	
Cbf 600 S	600	2008	2010	PC43A	88120-MER-R01	**122762170**	88110-MER-R01	**122772170**	
Cbf 600 S	600	2008	2010	PC43C	88120-MER-R01	**122762170**	88110-MER-R01	**122772170**	
Cbf 600 Sa Abs	600	2004	2005	PC38B	88120-MER-D00	**122762040**	88110-MER-D00	**122772040**	
Cbf 600 Sa Abs	600	2004	2005	PC38D	88120-MER-D00	**122762040**	88110-MER-D00	**122772040**	
Cbf 600 Sa Abs	600	2006	2007	PC38B	88120-MER-R01	**122762170**	88110-MER-R01	**122772170**	
Cbf 600 Sa Abs	600	2006	2007	PC38D	88120-MER-R01	**122762170**	88110-MER-R01	**122772170**	
Cbf 600 Sa Abs	600	2008	2013	PC43B	88120-MER-R01	**122762170**	88110-MER-R01	**122772170**	
Cbf 600 Sa Abs	600	2008	2013	PC43D	88120-MER-R01	**122762170**	88110-MER-R01	**122772170**	
Cbr 600 F	600	1999	2000	PC35A	88120-MBW-003	**122761250**	88110-MBW-003	**122771250**	
Cbr 600 F	600	1999	2000	PC35D	88120-MBW-003	**122761250**	88110-MBW-003	**122771250**	
Cbr 600 F	600	2001	2007	PC35F	88120-MBW-003	**122761250**	88110-MBW-003	**122771250**	
Cbr 600 Fr Rossi	600	2001	2002	PC35H	88120-MBW-003	**122761250**	88110-MBW-003	**122771250**	
Cbr 600 Fs Sport	600	2001	2002	PC35H	88120-MBW-003	**122761250**	88110-MBW-003	**122771250**	
Cbr 600 Rr	600	2003	2006	PC37B	88120-MEL-003	**122761310**	88110-MEL-003	**122771310**	
Cbr 600 Rr	600	2004	2005	PC37A	88120-MEL-003	**122761310**	88110-MEL-003	**122771310**	
Cbr 600 Rr	600	2007	2008	PC40A	88120-MEL-003	**122761310**	88110-MEL-003	**122771310**	
Cbr 600 Rr	600	2009	2016	PC40C	88120-MEL-003	**122761310**	88110-MEL-003	**122771310**	
Cbr 600 Rra Abs	600	2009	2016	PC40E	88120-MEL-003	**122761310**	88110-MEL-003	**122771310**	
Fjs 600 A Silver Wing Abs	600	2003	2010	PF01B	88220-MCT-692	**122762910**	88210-MCT-692	**122772910**	
Fjs 600 D Silver Wing	600	2003	2006	PF01A	88220-MCT-692	**122762910**	88210-MCT-692	**122772910**	
Fjs 600 Silver Wing	600	2001	2002	PF01A	88220-MCT-692	**122762910**	88210-MCT-692	**122772910**	
Xl 600 V Transalp	600	1997	2000	PD10A	88110-KW4-600	**122771340**	88110-KW4-600	**122771340**	
Xl 600 V Transalp	600	1997	2000	PD10B	88110-KW4-600	**122771340**	88110-KW4-600	**122771340**	
Cb 650 F	650	2016	2016	RC75A	88220-MJE-D40	**122762440**	88210-MJE-D40	**122772440**	
Cb 650 Fa Abs	650	2014	2015	RC75C	88220-MJE-D40	**122762440**	88210-MJE-D40	**122772440**	
Cb 650 Fa Abs	650	2014	2016	RC75B	88220-MJE-D40	**122762440**	88210-MJE-D40	**122772440**	
Cbr 650 Fa Abs	650	2014	2015	RC74C	88120-MJE-D01	**122762450**	88110-MJE-D01	**122772450**	
Cbr 650 Fa Abs	650	2014	2016	RC74B	88120-MJE-D01	**122762450**	88110-MJE-D01	**122772450**	
Cbr 650 Fa Abs	650	2017	2018	RC96A	88120-MJE-D01	**122762450**	88110-MJE-D01	**122772450**	
Nx 650 Dominator	650	1990	1992	RD02	88110-MN9-003	**122771400**	88110-MN9-003	**122771400**	
Nx 650 Dominator	650	1993	1994	RD02	88110-KW4-600	**122771340**	88110-KW4-600	**122771340**	



Modello *Model*	**CC**	**Da** *From*	**A** *To*	**Telaio** *Frame*	**Specchio Sinistro OEM** *Left Mirror OEM*	**Specchio Sinistro Codice RMS** *Left Mirror RMS Code*	**Specchio Destro OEM** *Right Mirror OEM*	**Specchio Destro Codice RMS** *Right Mirror RMS Code*	**Note** *Notes*
Nx 650 Dominator	650	1995	1995	RD0870	88110-KW4-600	**122771340**	88110-KW4-600	**122771340**	
Nx 650 Dominator	650	1995	1995	RD0871	88110-KW4-600	**122771340**	88110-KW4-600	**122771340**	
Nx 650 Dominator	650	1996	2000	RD08A	88110-KW4-600	**122771340**	88110-KW4-600	**122771340**	
Nx 650 Dominator	650	1996	2000	RD08B	88110-KW4-600	**122771340**	88110-KW4-600	**122771340**	
Nx 650 Pignone Dominator Spina Larga	650	1988	1988	RD02	88110-MN9-003	**122771400**	88110-MN9-003	**122771400**	
Nx 650 Pignone Dominator Spina Stretta	650	1989	1989	RD02	88110-MN9-003	**122771400**	88110-MN9-003	**122771400**	
Xrv 650 Africa Twin	650	1988	1990	RD03	88110-MN9-003	**122771400**	88110-MN9-003	**122771400**	
Nc 700 D Integra Dct Abs	700	2012	2012	RC62B	88220-MGS-D30	**122761100**	88210-MGS-D30	**122771100**	
Nc 700 D Integra Dct Abs	700	2012	2013	RC62A	88220-MGS-D30	**122761100**	88210-MGS-D30	**122771100**	
Nc 700 S	700	2012	2014	RC61B	88220-MGS-D30	**122761100**	88210-MGS-D30	**122771100**	
Nc 700 Sa Abs	700	2012	2014	RC61A	88220-MGS-D30	**122761100**	88210-MGS-D30	**122771100**	
Nc 700 Sa Abs	700	2012	2014	RC61C	88220-MGS-D30	**122761100**	88210-MGS-D30	**122771100**	
Nc 700 Sd Dct Abs	700	2012	2014	RC61D	88220-MGS-D30	**122761100**	88210-MGS-D30	**122771100**	
Nc 700 X	700	2012	2014	RC63A	88220-MGS-D30	**122761100**	88210-MGS-D30	**122771100**	
Nc 700 X	700	2012	2014	RC63C	88220-MGS-D30	**122761100**	88210-MGS-D30	**122771100**	
Nc 700 Xa Abs	700	2012	2014	RC63B	88220-MGS-D30	**122761100**	88210-MGS-D30	**122771100**	
Nc 700 Xa Abs	700	2012	2014	RC63E	88220-MGS-D30	**122761100**	88210-MGS-D30	**122771100**	
Nc 700 Xd Dct Abs	700	2012	2014	RC63D	88220-MGS-D30	**122761100**	88210-MGS-D30	**122771100**	
Nc 700 Xd Dct Abs	700	2013	2014	RC63F	88220-MGS-D30	**122761100**	88210-MGS-D30	**122771100**	
Nt 700 V Deauville	700	2006	2010	RC52A	88120-MEW-921	**122762180**	88110-MEW-921	**122772180**	
Nt 700 V Deauville	700	2011	2013	RC59A	88120-MEW-921	**122762180**	88110-MEW-921	**122772180**	
Nc 750 D Integra Dct Abs	750	2014	2015	RC71A	88220-MGS-D30	**122761100**	88210-MGS-D30	**122771100**	
Nc 750 D Integra Dct Abs	750	2016	2017	RC89A	88220-MGS-D30	**122761100**	88210-MGS-D30	**122771100**	
Nc 750 D Integra Dct Abs	750	2018	2018	-	88220-MGS-D30	**122761100**	88210-MGS-D30	**122771100**	
Nc 750 J Nm4 Vultus Dct Abs	750	2014	2016	RC82A	88220-MGS-D30	**122761100**	88210-MGS-D30	**122771100**	
Nc 750 J Nm4 Vultus Dct Abs	750	2017	2017	RC92A	88220-MGS-D30	**122761100**	88210-MGS-D30	**122771100**	
Nc 750 Sa Abs	750	2014	2015	RC70B	88220-MGS-D30	**122761100**	88210-MGS-D30	**122771100**	
Nc 750 Sa Abs	750	2016	2017	RC88A	88220-MGS-D30	**122761100**	88210-MGS-D30	**122771100**	
Nc 750 Sa Abs	750	2018	2018	-	88220-MGS-D30	**122761100**	88210-MGS-D30	**122771100**	
Nc 750 Sd Dct Abs	750	2014	2015	RC70C	88220-MGS-D30	**122761100**	88210-MGS-D30	**122771100**	
Nc 750 Sd Dct Abs	750	2016	2017	RC88B	88220-MGS-D30	**122761100**	88210-MGS-D30	**122771100**	
Nc 750 Sd Dct Abs	750	2018	2018	-	88220-MGS-D30	**122761100**	88210-MGS-D30	**122771100**	
Nc 750 Xa Abs	750	2014	2015	RC72B	88220-MGS-D30	**122761100**	88210-MGS-D30	**122771100**	
Nc 750 Xa Abs	750	2016	2018	RC90A	88220-MGS-D30	**122761100**	88210-MGS-D30	**122771100**	
Nc 750 Xd Dct Abs	750	2014	2015	RC72C	88220-MGS-D30	**122761100**	88210-MGS-D30	**122771100**	
Nc 750 Xd Dct Abs	750	2016	2018	RC90B	88220-MGS-D30	**122761100**	88210-MGS-D30	**122771100**	
Vt 750 C2B Shadow Black Spirit	750	2010	2011	RC53C	88220-MGR-641	**122762080**	88210-MGR-641	**122772080**	
Vt 750 S	750	2010	2014	RC58A	88220-MGR-641	**122762080**	88210-MGR-641	**122772080**	
Xrv 750 Africa Twin	750	1990	1992	RD04	88110-MN9-003	**122771400**	88110-MN9-003	**122771400**	
Xrv 750 Africa Twin	750	1993	1995	RD07	88220-MY1-003	**122761390**	88210-MY1-003	**122771390**	
Xrv 750 Africa Twin	750	1996	2003	RD07A	88220-MY1-003	**122761390**	88210-MY1-003	**122771390**	
Xrv 750 Africa Twin	750	1996	2003	RD07B	88220-MY1-003	**122761390**	88210-MY1-003	**122771390**	
Vfr 800	800	2002	2010	RC46A	88120-MCW-D01	**122761940**	88110-MCW-D01	**122771940**	
Vfr 800 A Abs	800	2002	2013	RC46C	88120-MCW-D01	**122761940**	88110-MCW-D01	**122771940**	
Vfr 800 Fi	800	1998	1998	RC46A	88120-MCW-D01	**122761940**	88110-MCW-D01	**122771940**	
Vfr 800 Fi	800	1998	1999	RC46B	88120-MCW-D01	**122761940**	88110-MCW-D01	**122771940**	
Vfr 800 Fi	800	2000	2001	RC46D	88120-MBG-D01	**122762120**	88110-MBG-D01	**122772120**	
Vfr 800 Fi Jubi Modell	800	1999	1999	RC46B	88120-MCW-D01	**122761940**	88110-MCW-D01	**122771940**	



SPECCHIETTI RETROVISORI

REAR VIEW MIRRORS

Modello *Model*	**CC**	**Da** *From*	**A** *To*	**Telaio** *Frame*	**Specchio Sinistro OEM** *Left Mirror OEM*	**Specchio Sinistro Codice RMS** *Left Mirror RMS Code*	**Specchio Destro OEM** *Right Mirror OEM*	**Specchio Destro Codice RMS** *Right Mirror RMS Code*	**Note** *Notes*
Cbr 900 Rr Fireblade	900	2000	2001	SC44B	88120-MCJ-003	**122762140**	88110-MCJ-003	**122772140**	
Cbr 900 Rr Fireblade	900	2002	2003	SC50B	88120-MCJ-003	**122762140**	88110-MCJ-003	**122772140**	
Cbf 1000	1000	2006	2010	SC58A	88120-MER-R01	**122762170**	88110-MER-R01	**122772170**	
Cbf 1000 A Abs	1000	2006	2012	SC58B	88120-MER-R01	**122762170**	88110-MER-R01	**122772170**	
Cbf 1000 F	1000	2010	2014	SC64A	88120-MER-R01	**122762170**	88110-MER-R01	**122772170**	
Cbf 1000 Fa Abs	1000	2010	2016	SC64B	88120-MER-R01	**122762170**	88110-MER-R01	**122772170**	
Cbf 1000 Fa Abs	1000	2010	2016	SC64D	88120-MER-R01	**122762170**	88110-MER-R01	**122772170**	
Cbr 1000 Ra Fireblade Abs	1000	2009	2016	SC59C	88120-MFL-003	**122761810**	88110-MFL-003	**122771810**	
Cbr 1000 Rr Fireblade	1000	2004	2005	SC57B	88120-MEL-003	**122761310**	88110-MEL-003	**122771310**	
Cbr 1000 Rr Fireblade	1000	2004	2007	SC57A	88120-MEL-003	**122761310**	88110-MEL-003	**122771310**	
Cbr 1000 Rr Fireblade	1000	2008	2016	SC59A	88120-MFL-003	**122761810**	88110-MFL-003	**122771810**	
Cbr 1000 Rrs Fireblade Edition	1000	2007	2007	SC57D	88120-MEL-003	**122761310**	88110-MEL-003	**122771310**	
Cbr 1000 Rrs Fireblade Edition	1000	2008	2008	SC59D	88120-MFL-003	**122761810**	88110-MFL-003	**122771810**	
Cbr 1000 S Fireblade Sp	1000	2014	2016	SC59E	88120-MFL-003	**122761810**	88110-MFL-003	**122771810**	
Cbr 1000 Sa Fireblade Sp Abs	1000	2014	2016	SC59G	88120-MFL-003	**122761810**	88110-MFL-003	**122771810**	
Crf 1000 Africa Twin Adventure Sport Abs Dct	1000	2018	2018	-	88220-MGS-D30	**122761100**	88210-MGS-D30	**122771100**	
Crf 1000 L Africa Twin	1000	2016	2016	SD04A	88220-MGS-D30	**122761100**	88210-MGS-D30	**122771100**	
Crf 1000 La Africa Twin Abs	1000	2017	2017	SD06A	88220-MGS-D30	**122761100**	88210-MGS-D30	**122771100**	
Crf 1000 La Africa Twin Abs	1000	2018	2018	-	88220-MGS-D30	**122761100**	88210-MGS-D30	**122771100**	
Crf 1000 La Africa Twin Track Abs	1000	2016	2016	SD04B	88220-MGS-D30	**122761100**	88210-MGS-D30	**122771100**	
Crf 1000 Ld Africa Twin Abs Dct	1000	2017	2017	SD06B	88220-MGS-D30	**122761100**	88210-MGS-D30	**122771100**	
Crf 1000 Ld Africa Twin Abs Dct	1000	2018	2018	-	88220-MGS-D30	**122761100**	88210-MGS-D30	**122771100**	
Crf 1000 Ld Africa Twin Abs Dct Track	1000	2016	2016	SD04C	88220-MGS-D30	**122761100**	88210-MGS-D30	**122771100**	
Vtr 1000 Sp1	1000	2000	2001	SC45A	88120-MBW-003	**122761250**	88110-MBW-003	**122771250**	
Vtr 1000 Sp2	1000	2002	2006	SC45A	88120-MBW-003	**122761250**	88110-MBW-003	**122771250**	
Vfr 1200 F Abs	1200	2010	2016	SC63A	88220-MGH-640	**122761410**	88210-MGH-640	**122771410**	
Vfr 1200 Fd Dct Abs	1200	2010	2016	SC63C	88220-MGH-640	**122761410**	88210-MGH-640	**122771410**	
Vfr 1200 X Crosstourer Abs	1200	2012	2013	SC70A	88220-MGH-640	**122761410**	88210-MGH-640	**122771410**	
Vfr 1200 X Crosstourer Abs	1200	2017	2018	SC76A	88220-MGH-640	**122761410**	88210-MGH-640	**122771410**	
Vfr 1200 Xd Crosstourer Dct Abs	1200	2012	2013	SC70C	88220-MGH-640	**122761410**	88210-MGH-640	**122771410**	
Vfr 1200 Xd Crosstourer Dct Abs	1200	2017	2018	SC76C	88220-MGH-640	**122761410**	88210-MGH-640	**122771410**	
Vfr 1200 Xdl Crosstourer Dct Abs	1200	2014	2015	SC70G	88220-MGH-640	**122761410**	88210-MGH-640	**122771410**	
Vfr 1200 Xdl Crosstourer Dct Abs	1200	2016	2016	SC76F	88220-MGH-640	**122761410**	88210-MGH-640	**122771410**	
Vfr 1200 Xl Crosstourer Abs	1200	2014	2015	SC70E	88220-MGH-640	**122761410**	88210-MGH-640	**122771410**	
Vfr 1200 Xl Crosstourer Abs	1200	2016	2016	SC76E	88220-MGH-640	**122761410**	88210-MGH-640	**122771410**	
Vt 1300 Cx	1300	2010	2016	SC61A	88220-MGR-641	**122762080**	88210-MGR-641	**122772080**	
Vt 1300 Cxa Abs	1300	2010	2015	SC61B	88220-MGR-641	**122762080**	88210-MGR-641	**122772080**	



Modello *Model*	CC	Da *From*	A *To*	Telaio *Frame*	Specchio Sinistro OEM *Left Mirror OEM*	Specchio Sinistro Codice RMS *Left Mirror RMS Code*	Specchio Destro OEM *Right Mirror OEM*	Specchio Destro Codice RMS *Right Mirror RMS Code*	Note *Notes*
HUSQVARNA									
Wre-Sm S	125	2000	2005	H200AA	-	-	800058378	**122772210**	
Wre-Sm S	125	2006	2008	H300A	-	-	800058378	**122772210**	
KAWASAKI									
Ninja 250R K8F-K9F-K9Fa-Kaf	250	2008	2010	EX250KKDA	560010098	**122762150**	560010099	**122772150**	
Ninja 250R Kbf-Kbfa-Kcf	250	2011	2012	EX250KKDA	560010098	**122762150**	560010099	**122772150**	
Ninja 250Sl Abs Bff-Bfs-Bfsa-Bgf-Bgfa	250	2015	2016	BX250ABJP	560010239	**122762500**	560010240	**122772500**	
Ninja 250Sl Aff-Afs-Afsa-Agf-Agfa	250	2015	2016	BX250AAJP	560010239	**122762500**	560010240	**122772500**	
Z250Sl Abs Fff-Ffs-Fgf	250	2015	2016	BR250EFJP	560010243	**122762510**	560010244	**122772510**	
Z250Sl Abs Fhf	250	2017	2017	BR250EFJP	560010243	**122762510**	560010244	**122772510**	
Z250Sl Eff-Efs-Egf	250	2015	2016	BR250EEJP	560010243	**122762510**	560010244	**122772510**	
Kle Versys-X Abs Chf	300	2017	2017	LE300CCDA	560010299	**122762730**	560010300	**122772730**	
Ninja 300 Abs Bdf-Bef-Befa-Bff-Bffa	300	2013	2015	EX300ABDA	560010239	**122762500**	560010240	**122772500**	
Ninja 300 Abs Bgf-Bgfa	300	2016	2016	EX300ABDA	560010239	**122762500**	560010240	**122772500**	
Ninja 300 Adf-Aef-Aefa-Aff-Affa	300	2013	2015	EX300AADA	560010239	**122762500**	560010240	**122772500**	
Ninja 300 Agf-Agfa	300	2016	2016	EX300AADA	560010239	**122762500**	560010240	**122772500**	
Z300 Abs Bhf-Bhfa-Bjf-Bjfa	300	2017	2018	ER300ABDA	560010241	**122762940**	560010242	**122772940**	
Z300 Aff-Agf	300	2015	2016	ER300AADA	560010241	**122762940**	560010242	**122772940**	
Z300 Bff-Bgf Abs	300	2015	2016	ER300ABDA	560010241	**122762940**	560010242	**122772940**	
Ninja Zx-6R R9F-Raf-Rbf-Rcf-Rdf	600	2009	2013	ZX600RRA	560010147	**122762300**	560010147	**122772300**	
Ninja Zx-6R Ref-Rff-Rgf	600	2014	2016	ZX600RRA	560010147	**122762300**	560010147	**122772300**	
Ninja Zx-6R Abs Fdf-Fef-Fff-Ffa	636	2013	2015	ZX636EFA	560010245	**122762470**	560010246	**122772470**	
Ninja Zx-6R Abs Fgf-Fgfa	636	2016	2016	ZX636EFA	560010245	**122762470**	560010246	**122772470**	
Ninja Zx-6R Edf-Eef-Eff-Effa	636	2013	2015	ZX636EEA	560010245	**122762470**	560010246	**122772470**	
Ninja Zx-6R Egf-Egfa	636	2016	2016	ZX636EEA	560010245	**122762470**	560010246	**122772470**	
Er-6F A6F-A8F	650	2006	2008	EX650AAA	560010043	**122761910**	560010044	**122771910**	
Er-6F Abs B6F-B8F	650	2006	2008	EX650ABA	560010043	**122761910**	560010044	**122771910**	
Er-6F Abs D9F-Daf-Dbf	650	2009	2011	EX650CDD	560010142	**122761850**	560010143	**122771850**	
Er-6F Abs Fcf-Fds-Fef-Fff-Fgf	650	2012	2016	EX650EFDA	560010274	**122762630**	560010275	**122772630**	
Er-6F C9F-Caf-Cbf	650	2009	2011	EX650CCD	560010142	**122761850**	560010143	**122771850**	
Er-6F Ecf-Eds-Eef-Eff-Egf	650	2012	2016	EX650EEDA	560010274	**122762630**	560010275	**122772630**	
Er-6N A6S-A8F	650	2006	2008	ER650AAA\ER650AAD	560010051	**122761290**	560010122	**122771290**	
Er-6N Abs B6F-B8F	650	2006	2008	ER650ABA	560010051	**122761290**	560010122	**122771290**	
Er-6N Abs Fcf-Fds-Fef-Fff-Fgf	650	2012	2016	ER650EFDA	560010272	**122762480**	560010273	**122772480**	
Er-6N Ecf-Eds-Eef-Eff-Egf	650	2012	2016	ER650EEDA	560010272	**122762480**	560010273	**122772480**	
Kle Versys A7F-A8F-A9F	650	2007	2009	LE650AAA	560010051	**122761290**	560010122	**122771290**	
Kle Versys Abs B7F-B8F-B9F	650	2007	2009	LE650ABA	560010051	**122761290**	560010122	**122771290**	
Kle Versys Abs Dbf-Dcf-Ddf-Def	650	2011	2014	LE650CDD	560010194	**122762490**	560010195	**122772490**	
Kle Versys Abs Fff-Fgf	650	2015	2016	LE650EFDA	560010194	**122762490**	560010195	**122772490**	
Kle Versys Abs Fhf-Fhfa	650	2017	2017	LE650EFDA	560010194	**122762490**	560010195	**122772490**	



SPECCHIETTI RETROVISORI

REAR VIEW MIRRORS

Modello *Model*	**CC**	**Da** *From*	**A** *To*	**Telaio** *Frame*	**Specchio Sinistro OEM** *Left Mirror OEM*	**Specchio Sinistro Codice RMS** *Left Mirror RMS Code*	**Specchio Destro OEM** *Right Mirror OEM*	**Specchio Destro Codice RMS** *Right Mirror RMS Code*	**Note** *Notes*
Kle Versys Cbf-Ccf-Cdf-Cef	650	2011	2014	LE650CCD	560010194	**122762490**	560010195	**122772490**	
Kle Versys Eff-Egf	650	2015	2016	LE650EEDA	560010194	**122762490**	560010195	**122772490**	
Z750 Abs M7F-Maf-Mas	750	2007	2010	ZR750LMA	560010117	**122761270**	560010054	**122771270**	
Z750 J1H-J2H	750	2004	2005	ZR750JJA	560010030	**122761300**	560010031	**122771300**	
Z750 J6F	750	2006	2006	ZR750JJA	560010030	**122761300**	560010031	**122771300**	
Z750 L7F-Laf-Las	750	2007	2010	ZR750LLA	560010117	**122761270**	560010054	**122771270**	
Z800 Abs Bds-Bef-Bff-Bgf	800	2013	2014	ZR800ABDA	560010243	**122762510**	560010244	**122772510**	
Z800 Abs Bds-Bef-Bff-Bgf	800	2015	2016	ZR800ABDA	560010299	**122762730**	560010300	**122772730**	
Z800 Ads-Aef-Aff-Agf	800	2013	2014	ZR800AADA	560010243	**122762510**	560010244	**122772510**	
Z800 Ads-Aef-Aff-Agf	800	2015	2016	ZR800AADA	560010299	**122762730**	560010300	**122772730**	
Z800 E Abs Dds-Def-Dff-Dgf-Dgfa	800	2013	2014	ZR800CDDA	560010243	**122762510**	560010244	**122772510**	
Z800 E Abs Dds-Def-Dff-Dgf-Dgfa	800	2015	2016	ZR800CDDA	560010299	**122762730**	560010300	**122772730**	
Z800 E Abs Special Edition Fgf	800	2016	2016	ZR800FFDA	560010299	**122762730**	560010300	**122772730**	
Z800 E Cds-Cef-Cff-Cgf-Cgfa	800	2013	2014	ZR800CCDA	560010243	**122762510**	560010244	**122772510**	
Z800 E Cds-Cef-Cff-Cgf-Cgfa	800	2015	2016	ZR800CCDA	560010299	**122762730**	560010300	**122772730**	
Z800 E Special Edition Egf	800	2016	2016	ZR800EEDA	560010299	**122762730**	560010300	**122772730**	
Z900 Abs Bhf	900	2017	2017	ZR900BBDA	560010299	**122762730**	560010300	**122772730**	
Klz Versys Acf-Adf-Aef	1000	2012	2014	LZT00AAA	560010241	**122762940**	560010242	**122772940**	
Klz Versys Bff-Bgf	1000	2015	2016	LZT00BBA	560010297	**122762600**	560010298	**122772600**	
Klz Versys Bhf	1000	2017	2017	LZT00BBA	560010297	**122762600**	560010298	**122772600**	
Ninja Zx-10R Abs Kbf-Kcf-Kdf-Kef	1000	2011	2014	ZXT00JKA	560010288	**122762310**	560010289	**122772310**	
Ninja Zx-10R Abs Kff-Kffa	1000	2015	2015	ZXT00JKA	560010288	**122762310**	560010289	**122772310**	
Ninja Zx-10R Jbf-Jcf-Jdf-Jef	1000	2011	2014	ZXT00JJA	560010288	**122762310**	560010289	**122772310**	
Ninja Zx-10R Jff-Jffa	1000	2015	2015	ZXT00JJA	560010288	**122762310**	560010289	**122772310**	
Z1000 A1H-A3H	1000	2003	2005	ZRT00AAA	560010030	**122761300**	560010031	**122771300**	
Z1000 A6F	1000	2006	2006	ZRT00AAA	560010030	**122761300**	560010031	**122771300**	
Z1000 Abs C7F-C9F	1000	2007	2009	ZRT00BCA	560010117	**122761270**	560010054	**122771270**	
Z1000 Abs Eaf-Ebf-Ecf-Ecfa	1000	2010	2012	ZRT00DEA	560010215	**122762610**	560010216	**122772610**	
Z1000 Abs Edf-Edfa	1000	2013	2013	ZRT00DEA	560010215	**122762610**	560010216	**122772610**	
Z1000 B7F-B9F	1000	2007	2009	ZRT00BBA	560010117	**122761270**	560010054	**122771270**	
Z1000 Daf-Das-Dbf-Dcf-Dcfa	1000	2010	2012	ZRT00DDA	560010215	**122762610**	560010216	**122772610**	
Z1000 Ddf-Ddfa	1000	2013	2013	ZRT00DDA	560010215	**122762610**	560010216	**122772610**	
Z1000Sx Abs Hbf-Hcf-Hdf	1000	2011	2013	ZXT00GHA	560010231	**122762620**	560010232	**122772620**	
Z1000Sx Abs Mef-Mff-Mgf	1000	2014	2016	ZXT00LMA	560010259	**122762520**	560010260	**122772520**	
Z1000Sx Abs Whf	1000	2017	2017	ZXT00WWA	560010259	**122762520**	560010260	**122772520**	
Z1000Sx Gbf-Gcf-Gdf	1000	2011	2013	ZXT00GGA	560010231	**122762620**	560010232	**122772620**	
Z1000Sx Lef-Lff-Lgf	1000	2014	2016	ZXT00LLA	560010259	**122762520**	560010260	**122772520**	
Zzr Abs D8F-Dbf	1400	2008	2011	ZXT40CDA	560010135	**122762690**	560010136	**122772690**	
Zzr Abs Fcf-Fdf-Fdfa-Fef-Fefb	1400	2012	2014	ZXT40EFA	560010233	**122762690**	560010234	**122772690**	
Zzr Abs Fff-Fffa	1400	2015	2015	ZXT40EFA	560010233	**122762690**	560010234	**122772690**	
Zzr Abs Hgf-Hhf	1400	2016	2017	ZXT40HHA	560010233	**122762690**	560010234	**122772690**	
Zzr Abs Jgf-Jhf-Jjf	1400	2016	2018	ZXT40HJA	560010233	**122762690**	560010234	**122772690**	



Modello *Model*	CC	Da *From*	A *To*	Telaio *Frame*	Specchio Sinistro OEM *Left Mirror OEM*	Specchio Sinistro Codice RMS *Left Mirror RMS Code*	Specchio Destro OEM *Right Mirror OEM*	Specchio Destro Codice RMS *Right Mirror RMS Code*	Note *Notes*
KEEWAY									
F-Act	50	2007	2008	SFCS005003	40460BMBT000	**122761590**	40470BMBT000	**122771590**	
F-Act Evo	50	2009	2009	SFCS005005	40460BMBT000	**122761590**	40470BMBT000	**122771590**	
Flash	50	2007	2008	SFLS005000	40460BMBT000	**122761590**	40470BMBT000	**122771590**	
Hurricane	50	2007	2008	SHRC005001	40460BMBT000	**122761590**	40470BMBT000	**122771590**	
Matrix	50	2007	2008	SMTX005002	40460BMBT000	**122761590**	40470BMBT000	**122771590**	
Ry6	50	2010	2010	SRY6005000	40460BMBT000	**122761590**	40470BMBT000	**122771590**	
Ry8	50	2008	2008	SRY8005000	40460BMBT000	**122761590**	40470BMBT000	**122771590**	
Ry8 Sport	50	2007	2010	SRY8005001	40460BMBT000	**122761590**	40470BMBT000	**122771590**	
F-Act	125	2007	2008	SFCS012501	40460BMBT000	**122761590**	40470BMBT000	**122771590**	
Arn 125-150	150	2007	2008	-	40460BMBT000	**122761590**	40470BMBT000	**122771590**	
F-Act	150	2007	2008	SFCS015001	40460BMBT000	**122761590**	40470BMBT000	**122771590**	
Matrix 125-150	150	2007	2008	-	40460BMBT000	**122761590**	40470BMBT000	**122771590**	
KYMCO									
Agility 2T R16	50	2010	2010	C11000	00188001	**122760360**	00188000	**122770360**	
Agility 2T R16	50	2012	2012	C11000	00188038	**122760360**	00188037	**122770360**	
Agility 4T Carry	50	2011	2011	U65010	00152116	**122760910**	00152115	**122770910**	
Agility 4T R10	50	2006	2006	U60010	00152116	**122760910**	00152115	**122770910**	
Agility 4T R10	50	2007	2008	U60080	00152116	**122760910**	00152115	**122770910**	
Agility 4T R12	50	2007	2008	U60050	00152116	**122760910**	00152115	**122770910**	
Agility 4T R16	50	2008	2009	C10000	00188001	**122760360**	00188000	**122770360**	
Agility 4T R16	50	2012	2012	C10000	00188038	**122760360**	00188037	**122770360**	
Agility R12	50	2005	2005	U60000	00152116	**122760910**	00152115	**122770910**	
Agility R12 Ecs	50	2016	2016	U68000	00152116	**122760910**	00152115	**122770910**	
Agility Rs Naked 2T	50	2010	2010	U10000	00188038	**122760360**	00188037	**122770360**	
B&W	50	2002	2002	S80000	00152054N	**122760820**	00152052N	**122770820**	
B&W Euro2	50	2003	2003	S80010	00152913N	**122760820**	00152910N	**122770820**	
Dink 50 4T	50	2007	2007	U50000	00152957	**122761210**	00152956	**122771210**	
Fever Zx	50	1999	2000	SC10AS\SE10CA	00152867	**122760370**	00152866	**122770370**	
Fever Zx Euro2	50	2003	2004	SC10A\S45AW	00152867	**122760370**	00152866	**122770370**	
Filly	50	1998	2000	SD10AC	00152521	**122760380**	00152500	**122770380**	
K 12	50	1995	2000	SE10CA	00152867	**122760370**	00152866	**122770370**	
Kb	50	1995	2000	SE10CA	00152867	**122760370**	00152866	**122770370**	
Like 2T	50	2009	2009	D10000	00188023	**122761150**	00188024	**122771150**	
Like 4T	50	2009	2009	D11000	00188023	**122761150**	00188024	**122771150**	
People	50	1999	2000	B10001	00152305	**122760310**	00152304	**122770310**	
People	50	2004	2004	BA10AG	00152305	**122760310**	00152304	**122770310**	
People Euro2	50	2003	2003	B10020	00152305	**122760310**	00152304	**122770310**	
People Euro2	50	2008	2008	B10020	00152305	**122760310**	00152304	**122770310**	
People Euro2	50	2011	2011	B10020	00152305	**122760310**	00152304	**122770310**	
People S	50	2005	2008	B90000	00153133	**122760580**	00153132	**122770610**	
People S 4T	50	2006	2008	B91000	00153133	**122760580**	00153132	**122770610**	
Super 8	50	2007	2007	U70000	00188001	**122760360**	00188000	**122770360**	
Super 8 2T	50	2009	2009	U90000	00188001	**122760360**	00188000	**122770360**	
Super 8 4T	50	2009	2009	U70300	00188001	**122760360**	00188000	**122770360**	
Super 9	50	2000	2000	S10000	00152521	**122760380**	00152500	**122770380**	
Super 9 Sport Euro2	50	2003	2004	S10020	00152521	**122760380**	00152500	**122770380**	
Top Boy	50	1997	2000	SF10AG\SF10AF	00152521	**122760380**	00152500	**122770380**	
Vitality 2T	50	2004	2004	U30000	00153133	**122760580**	00153132	**122770610**	
Vitality 4T	50	2004	2004	U31000	00153133	**122760580**	00153132	**122770610**	
Yup	50	2002	2002	S60000	00152521	**122760380**	00152500	**122770380**	
Yup Euro2	50	2003	2003	S60010	00152521	**122760380**	00152500	**122770380**	
Agility 4T	125	2006	2006	U62000	00152116	**122760910**	00152115	**122770910**	
Agility 4T Euro3	125	2006	2008	U62001	00152116	**122760910**	00152115	**122770910**	
Agility Carry	125	2011	2011	U62060	00152116	**122760910**	00152115	**122770910**	
Agility R16	125	2008	2009	C20000	00188001	**122760360**	00188000	**122770360**	
Agility R16	125	2012	2012	C20000	00188038	**122760360**	00188037	**122770360**	



SPECCHIETTI RETROVISORI

REAR VIEW MIRRORS

Modello *Model*	**CC**	**Da** *From*	**A** *To*	**Telaio** *Frame*	**Specchio Sinistro OEM** *Left Mirror OEM*	**Specchio Sinistro Codice RMS** *Left Mirror RMS Code*	**Specchio Destro OEM** *Right Mirror OEM*	**Specchio Destro Codice RMS** *Right Mirror RMS Code*	**Note** *Notes*
B&W 125-150	125	2000	2000	S30010\S30000	00152913N	**122760820**	00152910N	**122770820**	
B&W 125-150 Euro2	125	2003	2004	S30011\S30001	00152913N	**122760820**	00152910N	**122770820**	
Dink 125 Euro3	125	2006	2007	T90000	00152957	**122761210**	00152956	**122771210**	
Downtown 125I	125	2009	2016	V21000	00188026	**122761650**	00188025	**122771650**	
K-Xct I	125	2012	2014	D81000	00188026	**122761650**	00188025	**122771650**	
Like	125	2009	2009	D20000	00188023	**122761150**	00188024	**122771150**	
Like Lx	125	2012	2012	D20000	00188023	**122761150**	00188024	**122771150**	
People 125-150	125	1999	2000	B20000\B20001	00152305	**122760310**	00152304	**122770310**	
People 125-150 Euro2	125	2003	2003	B20010\B20020	00152305	**122760310**	00152304	**122770310**	
People Euro3	125	2007	2008	B20011	00152305	**122760310**	00152304	**122770310**	
People Euro3	125	2011	2011	B20011	00152305	**122760310**	00152304	**122770310**	
People Gti	125	2010	2010	V41000	00188034	**122761720**	00188031	**122771720**	
People Gti	125	2014	2014	V41000	00188066	**122761720**	00188065	**122771720**	
People One E4	125	2016	2016	D42000	00188058	**122761700**	00188057	**122771700**	
People One I	125	2013	2013	D40000	00188058	**122761700**	00188057	**122771700**	
People One I Dd	125	2015	2015	40000	00188058	**122761700**	00188057	**122771700**	
People S	125	2005	2005	D10000	00153133	**122760580**	00153132	**122770610**	
People S Dd Euro3	125	2007	2008	D10000	00153133	**122760580**	00153132	**122770610**	
Super 8	125	2008	2009	U80100	00188001	**122760360**	00188000	**122770360**	
Agility R16	150	2008	2009	C30000	00188001	**122760360**	00188000	**122770360**	
B&W 125-150	150	2000	2000	S30010\S30000	00152913N	**122760820**	00152910N	**122770820**	
B&W 125-150 Euro2	150	2003	2004	S30011\S30001	00152913N	**122760820**	00152910N	**122770820**	
People 125-150 Euro2	150	2003	2003	B20010\B20020	00152305	**122760310**	00152304	**122770310**	
Agility 200I R16	200	2010	2010	C31000	00188001	**122760360**	00188000	**122770360**	
Agility R16	200	2012	2012	C31000	00188038	**122760360**	00188037	**122770360**	
Dink Euro3I	200	2006	2007	T91000	00152961	**122761210**	00152960	**122771210**	
Downtown I	200	2010	2010	V22000	00188026	**122761650**	00188025	**122771650**	
Like 200I	200	2009	2009	D21000	00188023	**122761150**	00188024	**122771150**	
Like Lx	200	2012	2012	D21000	00188023	**122761150**	00188024	**122771150**	
People Gti	200	2010	2010	V42000	00188034	**122761720**	00188031	**122771720**	
People Gti	200	2014	2014	V42000	00188034	**122761720**	00188031	**122771720**	
People S	200	2005	2005	D11000	00153133	**122760580**	00153132	**122770610**	
People S 200I	200	2007	2007	D12000	00153133	**122760580**	00153132	**122770610**	
B&W	250	2000	2000	S70000	00152913N	**122760820**	00152910N	**122770820**	
B&W Euro2	250	2003	2003	S70011	00152913N	**122760820**	00152910N	**122770820**	
Downtown 300I	300	2009	2009	V20000	00188026	**122761650**	00188025	**122771650**	
Downtown Abs	300	2010	2010	V20010	00188026	**122761650**	00188025	**122771650**	
Downtown Abs I	300	2011	2016	V20030	00188026	**122761650**	00188025	**122771650**	
Downtown I	300	2011	2011	V20020	00188026	**122761650**	00188025	**122771650**	
K-Xct I	300	2012	2012	D80000	00188026	**122761650**	00188025	**122771650**	
K-Xct I Abs	300	2014	2014	D8000100	00188026	**122761650**	00188025	**122771650**	
People Gti	300	2010	2010	V40000	00188034	**122761720**	00188031	**122771720**	
People Gti	300	2011	2011	V40020	00188034	**122761720**	00188031	**122771720**	
People Gti	300	2014	2014	V40020	00188034	**122761720**	00188031	**122771720**	
People Gti Abs	300	2012	2012	V40010	00188034	**122761720**	00188031	**122771720**	
People Gti Abs	300	2014	2014	V40010	00188034	**122761720**	00188031	**122771720**	
People Gti Abs E4	300	2016	2016	C80000	00188034	**122761720**	00188031	**122771720**	
MALAGUTI									
Centro 4T	50	2008	2008	870201	8804803	**122760390**	8804903	**122770390**	
Centro Base	50	1993	1994	36	8801303	**122760040**	8801403	**122770040**	
Centro SI	50	1994	1998	36T	8801303	**122760040**	8801403	**122770040**	
Centro SI 4T	50	2010	2010	870201	8804803	**122760390**	8804903	**122770390**	
Centro SI Kat	50	1999	2000	4900000	8801303	**122760040**	8801403	**122770040**	
Ciak	50	1999	2000	5200000	8801303	**122760040**	8801403	**122770040**	
Ciak Elettrico	50	2000	2001	560000	8801303	**122760040**	8801403	**122770040**	
Ciak Master	50	2004	2004	-	8801303	**122760040**	8801403	**122770040**	



Modello *Model*	CC	Da *From*	A *To*	Telaio *Frame*	Specchio Sinistro OEM *Left Mirror OEM*	Specchio Sinistro Codice RMS *Left Mirror RMS Code*	Specchio Destro OEM *Right Mirror OEM*	Specchio Destro Codice RMS *Right Mirror RMS Code*	Note *Notes*
Ciak Master 4T	50	2005	2006	770201	8801303	**122760040**	8801403	**122770040**	
Ciak Master Euro 2	50	2006	2006	64000	8801303	**122760040**	8801403	**122770040**	
Ciak Mono Euro 2	50	2003	2003	-	8801303	**122760040**	8801403	**122770040**	
Ciak Td	50	2000	2001	5200000	8801303	**122760040**	8801403	**122770040**	
Crosser Cr1	50	1995	1998	43	8801303	**122760040**	8801403	**122770040**	
F10 Ac	50	2008	2008	880201	8801303	**122760040**	8801403	**122770040**	
F10 Ac Eco	50	2009	2010	88003	8801303	**122760040**	8801403	**122770040**	
F10 Jet Line	50	1992	1998	35	8801303	**122760040**	8801403	**122770040**	
F10 Kat	50	1999	2000	48	8801303	**122760040**	8801403	**122770040**	
F10 Restyling Euro2	50	2006	2006	48000	8801303	**122760040**	8801403	**122770040**	
F12 Aria Restyling Euro 2	50	2006	2006	46000	8801303	**122760040**	8801403	**122770040**	
F12 Phantom	50	1994	200	40	8801303	**122760040**	8801403	**122770040**	
F12 Phantom Lc	50	1994	1998	41	8801303	**122760040**	8801403	**122770040**	
F12 Phantom Restyling Eu2	50	2002	2004	4600000	8801303	**122760040**	8801403	**122770040**	
F12R Phantom Ac	50	2007	2010	830201	8805303	**122761610**	8805203	**122771610**	
F12R Phantom Lc	50	2007	2010	8201	8805303	**122761610**	8805203	**122771610**	
Yesterday - Yesterday Euro	50	1997	2000	45	8801303	**122760040**	8801403	**122770040**	
Ciak	100	1999	2000	510000	8801303	**122760040**	8801403	**122770040**	
Blog	125	2009	2010	890020	8805303	**122761610**	8805203	**122771610**	
Blog	125	2011	2011	8904518	8805903	**122761610**	8805803	**122771610**	
Centro Ie	125	2008	2009	840102	8804803	**122760390**	8804903	**122770390**	
Centro SI	125	2009	2010	840102	8804803	**122760390**	8804903	**122770390**	
Centro SI	125	2011	2011	84009207	8804803	**122760390**	8804903	**122770390**	
Ciak Master Euro 3	125	2006	2006	ZJM780201	8801303	**122760040**	8801403	**122770040**	
F18 Warrior	125	2000	2002	57000001	8803424	**122760040**	8803524	**122770040**	
F18 Warrior	150	2000	2002	58000001	8803424	**122760040**	8803524	**122770040**	
Blog	160	2009	2010	900020	8805303	**122761610**	8805203	**122771610**	
Blog	160	2011	2011	90004358	8805903	**122761610**	8805803	**122771610**	
Centro Ie	160	2008	2009	850102	8804803	**122760390**	8804903	**122770390**	
Centro SI	160	2009	2010	850102	8804803	**122760390**	8804903	**122770390**	
Centro SI	160	2011	2011	85011583	8806003	**122760390**	8806103	**122770390**	
Ciak Master Euro 2	200	2006	2006	790201	8801303	**122760040**	8801403	**122770040**	
Password	250	2005	2006	760102	8804803	**122760390**	8804903	**122770390**	
Password Eu3	250	2007	2008	7601A2	8804803	**122760390**	8804903	**122770390**	
MBK									
Cw Booster	50	2001	2002	5NT	4SBF62800000	**122760800**	-	-	
Cw Booster	50	2004	2004	5WW2	4SBF62800000	**122760800**	-	-	
Cw Booster Naked	50	2003	2003	1D12	4SBF62800000	**122760800**	-	-	
Cw Booster Spirit	50	1996	1998	4VU	4SBF62800000	**122760800**	-	-	
Cw Booster Spirit (Ita)	50	1999	1999	4VU9	4SBF62800000	**122760800**	-	-	
Cw Booster Spirit (Ita)	50	2000	2000	5LE\5MM	4SBF62800000	**122760800**	-	-	
Cw Booster Spirit Euro2	50	2002	2002	5RH2	4SBF62800000	**122760800**	-	-	
Cw Booster Spirit Euro2	50	2003	2003	5XW\5XX	4SBF62800000	**122760800**	-	-	
Cw L Booster	50	2001	2003	5SX	4SBF62800000	**122760800**	4SBF62900000	**122770800**	
Cw L Booster Spirit	50	2003	2003	5XY2\5YA2	4SBF62800000	**122760800**	4SBF62900000	**122770800**	
Cw Rs Booster Ng	50	2001	2002	5NU	4SBF62800000	**122760800**	4SBF62900000	**122770800**	
Cw Rs Booster Ng	50	2003	2003	1B02	4SBF62800000	**122760800**	4SBF62900000	**122770800**	
Cw Rs Booster Ng (Ita)	50	1995	1998	4SB	4SBF62800000	**122760800**	4SBF62900000	**122770800**	
Cw Rs Booster Ng (Ita)	50	1999	1999	5FX2	4SBF62800000	**122760800**	4SBF62900000	**122770800**	
Cw Rs Booster Ng Euro1	50	1999	2000	5LF	4SBF62800000	**122760800**	4SBF62900000	**122770800**	



SPECCHIETTI RETROVISORI

REAR VIEW MIRRORS

Modello *Model*	**CC**	**Da** *From*	**A** *To*	**Telaio** *Frame*	**Specchio Sinistro OEM** *Left Mirror OEM*	**Specchio Sinistro Codice RMS** *Left Mirror RMS Code*	**Specchio Destro OEM** *Right Mirror OEM*	**Specchio Destro Codice RMS** *Right Mirror RMS Code*	**Note** *Notes*
Cw Rsp Booster Rocket (Ita)	50	1997	1998	4UP	4SBF62800000	**122760800**	4SBF62900000	**122770800**	
Cw Rsx Booster Track (Ita)	50	1996	1998	4YB	4SBF62800000	**122760800**	4SBF62900000	**122770800**	
Cw Sp Booster Spirit Euro2	50	2002	2002	5RY2	4SBF62800000	**122760800**	4SBF62900000	**122770800**	
Ew Stunt	50	2000	2002	5LH	4SBF62800000	**122760800**	-	**-**	
Yn R Ovetto (Che-Ita)	50	1997	2001	5AD\5MR	5ADF62801000	**122760580**	5ADF62901000	**122770580**	
Yq L Nitro Jaguar	50	2004	2004	5SB9	5BRF62801000	**122760050**	5BRF62901000	**122770050**	
Yq Nitro	50	2001	2002	5PE	5BRF62801000	**122760050**	5BRF62901000	**122770050**	
Yq Nitro	50	2004	2004	5SB	5BRF62801000	**122760050**	5BRF62901000	**122770050**	
Yq Nitro (Ita)	50	1999	2000	5LC	5BRF62801000	**122760050**	5BRF62901000	**122770050**	
Yq Nitro Euro2	50	2003	2003	5SB	5BRF62801000	**122760050**	5BRF62901000	**122770050**	
Yn Ovetto	100	2000	2002	5KK	5ADF62801000	**122760580**	5ADF62901000	**122770580**	
Yq Nitro	100	2000	2002	5ME	5BRF62801000	**122760050**	5BRF62901000	**122770050**	
Yp Skyliner	250	2000	2001	5GM	5CG262800100	**122760560**	5CG262900100	**122770560**	
Yp Skyliner	250	2002	2003	5SJ	5CG262800100	**122760560**	5CG262900100	**122770560**	
Yp Skyliner Abs	250	2003	2003	5SJ7	5CG262800100	**122760560**	5CG262900100	**122770560**	
Xc Kilibre	300	2003	2003	5SE2	5SEF62900000	**122771640**	5SEF62800000	**122761640**	
MOTO GUZZI									
Breva Std - Pubblica Amministrazione	750	2003	2009	LLG00	GU32769460	**122760250**	GU32769460	**122770250**	
Nevada Classic	750	2004	2008	LME00	GU32769460	**122760250**	GU32769460	**122770250**	
Nevada Classic - Aquila Nera	750	2009	2010	LMG00	978570	**122760250**	978570	**122770250**	
Nevada Classic - Aquila Nera	750	2012	2013	LML00	978570	**122760250**	978570	**122770250**	
Nevada S	750	2010	2010	LMH00	978570	**122760250**	978570	**122770250**	
Nevada S Anniversario	750	2012	2012	LMM00	978570	**122760250**	978570	**122770250**	
V7 Cafe' Classic	750	2009	2009	LWA00\LWC01	978570	**122760250**	978570	**122770250**	
V7 Classic	750	2008	2012	LW000\LWC00\LWJ00	978570	**122760250**	978570	**122770250**	
V7 Ii Special Abs	750	2015	2016	LW200\LWUC1	978570	**122760250**	978570	**122770250**	
V7 Racer	750	2010	2011	LWB00	978570	**122760250**	978570	**122770250**	
V7 Racer	750	2012	2013	LWB00\LWU02	978570	**122760250**	978570	**122770250**	
V7 Special	750	2014	2014	LWT01	978570	**122760250**	978570	**122770250**	
V7 Special - Stone	750	2012	2013	LWG00\LWE00\LWU00	978570	**122760250**	978570	**122770250**	
Breva	850	2006	2007	LPB00	GU32769460	**122760250**	GU32769460	**122770250**	
Griso	850	2006	2007	LSB00	GU32769460	**122760250**	GU32769460	**122770250**	
Norge	850	2007	2007	LP000	GU32769460	**122760250**	GU32769460	**122770250**	
V9 Roamer	850	2016	2016	LH000	978570	**122760250**	978570	**122770250**	
Bellagio - Aquila Nera	940	2007	2013	LY000\LYA00	GU32769460	**122760250**	GU32769460	**122770250**	
Breva	1100	2005	2007	LPC00	GU32769460	**122760250**	GU32769460	**122770250**	
California Aquila Nera	1100	2009	2011	KDM00\KDU00	978570	**122760250**	978570	**122770250**	
California Vintage	1100	2006	2012	KDH00\KDP00	978570	**122760250**	978570	**122770250**	
Griso	1100	2005	2008	LS000\LSC	GU32769460	**122760250**	GU32769460	**122770250**	
Breva	1200	2007	2007	LPG00\LPG01	978570	**122760250**	978570	**122770250**	
Griso 8V - 8V Special Edition	1200	2007	2013	LSE00\LSE03	978570	**122760250**	978570	**122770250**	
Norge	1200	2006	2008	LPH011\LPL\LPU0	978570	**122760250**	978570	**122770250**	
MV AGUSTA									
Brutale	910	2005	2008	F411AC\F411AD	80B098339	**122762090**	80B098338	**122772090**	
Brutale 989R-1078Rr	989	2008	2008	F412AA\F413AA	80B098339	**122762090**	80B098338	**122772090**	
F4	1000	2004	2006	F511BB	80B0A3228	**122761920**	80B0A3229	**122771920**	
PEUGEOT									
Zenith 25 Ma	25	1995	1997	VGA 423	732513	**122762750**	732512	**122772750**	
Zenith 25 Na	25	1998	2000	VGA 423	732513	**122762750**	732512	**122772750**	
Buxy 50	50	1995	1997	VGA 427	732513	**122762750**	732512	**122772750**	



Modello *Model*	**CC**	**Da** *From*	**A** *To*	**Telaio** *Frame*	**Specchio Sinistro OEM** *Left Mirror OEM*	**Specchio Sinistro Codice RMS** *Left Mirror RMS Code*	**Specchio Destro OEM** *Right Mirror OEM*	**Specchio Destro Codice RMS** *Right Mirror RMS Code*	**Note** *Notes*
Buxy 50 Rs	50	1996	1997	VGA 427	732513	**122762750**	732512	**122772750**	
Jet Force 50 C-Tech	50	2005	2006	VGA A1AAAA	748211	**122760400**	748212	**122770400**	
Jet Force 50 C-Tech	50	2007	2011	VGA A1AABA	748211	**122760400**	748212	**122770400**	
Jet Force 50 C-Tech Rally Victories	50	2006	2007	VGA A1AAAA	748211	**122760400**	748212	**122770400**	
Jet Force 50 C-Tech Rcup	50	2007	2009	VGA A1AABA	748211	**122760400**	748212	**122770400**	
Jet Force 50 Darkside	50	2008	2015	VGA A1AABA	748211	**122760400**	748212	**122770400**	
Jet Force 50 Ice Blade	50	2010	2012	VGA A1AABA	748211	**122760400**	748212	**122770400**	
Jet Force 50 Tsdi	50	2003	2007	VGA A1AAJA	748211	**122760400**	748212	**122770400**	
Jet Force 50 Tsdi Sbc	50	2003	2006	VGA A1AAJB	748211	**122760400**	748212	**122770400**	
Kisbee 50 2T	50	2014	2015	-	772581	**122761570**	772582	**122771570**	
Kisbee 50 2T Streetzone	50	2014	2014	-	772581	**122761570**	772582	**122771570**	
Kisbee 50 4T	50	2011	2015	-	772581	**122761570**	772582	**122771570**	
Kisbee 50 4T Sportline	50	2014	2015	-	772581	**122761570**	772582	**122771570**	
Kisbee 50 Rs 2T	50	2014	2016	-	772581	**122761570**	772582	**122771570**	
Kisbee 50 Rs 4T	50	2013	2015	-	772581	**122761570**	772582	**122771570**	
Looxor 50	50	2002	2004	VGA B1AAAA	746782	**122761670**	746781	**122771670**	
Looxor 50	50	2005	2006	VGA B1AABA	746782	**122761670**	746781	**122771670**	
Looxor 50 Tsdi	50	2002	2003	VGA B1AAJA	746782	**122761670**	746781	**122771670**	
Looxor 50 Tsdi	50	2004	2006	VGA B1AA1A	746782	**122761670**	746781	**122771670**	
Ludix 50 Elegance	50	2004	2007	VGA L1AABA/EA	761702	**122761660**	761701	**122771660**	
Ludix 50 Ep	50	2008	2012	-	761702	**122761660**	761701	**122771660**	
Ludix 50 II Dt One Luxe 2 Sitzer	50	2008	2011	VGA L1AADA	761702	**122761660**	761701	**122771660**	
Ludix 50 II Elegance	50	2008	2011	VGA L1AAEA	761702	**122761660**	761701	**122771660**	
Ludix 50 II Lc Blaster Ice Blade	50	2010	2011	VGA L1ACFA	748211	**122760400**	748212	**122770400**	
Ludix 50 II Snake Furious	50	2008	2011	VGA L1AAFA	748211	**122760400**	748212	**122770400**	
Ludix 50 II Snake Naked 10 Inch	50	2008	2011	-	761702	**122761660**	761701	**122771660**	
Ludix 50 II Trend 12 Inch	50	2008	2011	VGA L1AAFA	761702	**122761660**	761701	**122771660**	
Ludix 50 II Tt One 2 Sitzer	50	2008	2012	VGA L1AADA	761702	**122761660**	761701	**122771660**	
Ludix 50 Lc Rs Blaster 12 Zoll	50	2007	2007	-	748211	**122760400**	748212	**122770400**	
Ludix 50 Pro 2T	50	2008	2013	-	761702	**122761660**	761701	**122771660**	
Ludix 50 Snake	50	2004	2007	VGA L1AAACA/FA	761702	**122761660**	761701	**122771660**	
Ludix 50 Trend 10 Inch	50	2004	2007	VGA L1AAAAA	761702	**122761660**	761701	**122771660**	
Speedfight 1 50 Ac Dt	50	1997	1998	VGA S1B00A	738997	**122760150**	738998	**122770150**	
Speedfight 1 50 Ac Dt	50	1999	2000	VGA S1B0KA	746782	**122761670**	746781	**122771670**	
Speedfight 1 50 Lc Dd	50	1999	2000	VGA S1B0KB	746782	**122761670**	746781	**122771670**	
Speedfight 1 50 Lc Dt	50	1997	1998	VGA S1B00B	738997	**122760150**	738998	**122770150**	
Speedfight 2 50 Ac Dd Ultimate Edition	50	2008	2009	VGA S1BADA/GA	748211	**122760400**	748212	**122770400**	
Speedfight 2 50 Ac Dt	50	2001	2001	VGA S1B0KA	748211	**122760400**	748212	**122770400**	
Speedfight 2 50 Ac Dt	50	2002	2004	VGA S1BACA	748211	**122760400**	748212	**122770400**	
Speedfight 2 50 Ac Dt	50	2005	2009	VGA S1BADA/GA	748211	**122760400**	748212	**122770400**	
Speedfight 2 50 Ac Dt Motor Sport	50	2007	2007	VGA S1BADA/GA	748211	**122760400**	748212	**122770400**	



SPECCHIETTI RETROVISORI

REAR VIEW MIRRORS

Modello *Model*	**CC**	**Da** *From*	**A** *To*	**Telaio** *Frame*	**Specchio Sinistro OEM** *Left Mirror OEM*	**Specchio Sinistro Codice RMS** *Left Mirror RMS Code*	**Specchio Destro OEM** *Right Mirror OEM*	**Specchio Destro Codice RMS** *Right Mirror RMS Code*	**Note** *Notes*
Speedfight 2 50 Ac Dt Rally Victories	50	2006	2007	VGA S1BADA/GA	748211	**122760400**	748212	**122770400**	
Speedfight 2 50 Ac Dt Rcup	50	2007	2009	VGA S1BADA/GA	748211	**122760400**	748212	**122770400**	
Speedfight 2 50 Ac Dt Silver Sport	50	2004	2004	VGA S1BACA	746782	**122761670**	746781	**122771670**	
Speedfight 2 50 Ac Dt Silver Sport	50	2005	2007	VGA S1BADA/GA	746782	**122761670**	746781	**122771670**	
Speedfight 2 50 Ac Dt Wrc 307	50	2005	2005	VGA S1BADA/GA	746782	**122761670**	746781	**122771670**	
Speedfight 2 50 Lc Dd	50	2001	2001	VGA S1B0KB	746782	**122761670**	746781	**122771670**	
Speedfight 2 50 Lc Dd	50	2002	2002	VGA S1B0EB	746782	**122761670**	746781	**122771670**	
Speedfight 2 50 Lc Dd	50	2003	2004	VGA S1BBAA	746782	**122761670**	746781	**122771670**	
Speedfight 2 50 Lc Dd	50	2005	2009	VGA S1BBBA/BBCA	746782	**122761670**	746781	**122771670**	
Speedfight 2 50 Lc Dd Furious	50	2003	2003	VGA S1BBAA	746782	**122761670**	746781	**122771670**	
Speedfight 2 50 Lc Dd Iron-X	50	2007	2007	VGA S1BBBA/BBCA	746782	**122761670**	746781	**122771670**	
Speedfight 2 50 Lc Dd Motor Sport	50	2007	2007	VGA S1BBBA/BBCA	746782	**122761670**	746781	**122771670**	
Speedfight 2 50 Lc Dd Rally Victories	50	2006	2007	VGA S1BBBA/BBCA	746782	**122761670**	746781	**122771670**	
Speedfight 2 50 Lc Dd Rcup	50	2007	2009	VGA S1BBBA/BBCA	746782	**122761670**	746781	**122771670**	
Speedfight 2 50 Lc Dd Silver Sport	50	2004	2004	VGA S1BBAA	746782	**122761670**	746781	**122771670**	
Speedfight 2 50 Lc Dd Silver Sport	50	2005	2007	VGA S1BBBA/BBCA	746782	**122761670**	746781	**122771670**	
Speedfight 2 50 Lc Dd Ultimate Edition	50	2008	2009	VGA S1BBBA/BBCA	748211	**122760400**	748212	**122770400**	
Speedfight 2 50 Lc Dd Wrc 206	50	2003	2004	VGA S1BBAA	746782	**122761670**	746781	**122771670**	
Speedfight 2 50 Lc Dd Wrc 307	50	2005	2005	S1BBBA/BBCA	746782	**122761670**	746781	**122771670**	
Speedfight 2 50 Lc Dd X-Race	50	2001	2001	VGA S1B0KB	746782	**122761670**	746781	**122771670**	
Speedfight 2 50 Lc Dd X-Race	50	2002	2002	VGA S1B0EB	746782	**122761670**	746781	**122771670**	
Speedfight 2 50 Lc Dd X-Race	50	2003	2003	VGA S1BBAA	746782	**122761670**	746781	**122771670**	
Squab 50	50	1996	1997	VGA S1A03	734966	**122762760**	734967	**122772760**	
Tkr 50	50	2001	2001	VGA S1A0KB	734966	**122762760**	734967	**122772760**	
Tkr 50	50	2002	2002	VGA S1A0KF	734966	**122762760**	734967	**122772760**	
Tkr 50	50	2003	2004	VGA S1AAAA	734966	**122762760**	734967	**122772760**	
Tkr 50	50	2005	2007	VGA S1AADA/AAGA	734966	**122762760**	734967	**122772760**	
Tkr 50	50	2008	2011	-	734966	**122762760**	734967	**122772760**	
Tkr 50 12 Pollici	50	2010	2011	-	734966	**122762760**	734967	**122772760**	
Tkr 50 Furious	50	2003	2004	VGA S1AAAA	738997	**122760150**	738998	**122770150**	
Tkr 50 Furious	50	2005	2008	VGA S1AADA/AAGA	738997	**122760150**	738998	**122770150**	
Tkr 50 Furious 12 Inch	50	2010	2011	VGA S1AADA/AAGA	746782	**122761670**	746781	**122771670**	
Tkr 50 Metal-X	50	2002	2002	VGA S1A0KF	746782	**122761670**	746781	**122771670**	
Tkr 50 Metal-X	50	2003	2003	VGA S1AAAA	746782	**122761670**	746781	**122771670**	
Tkr 50 Rally Victories	50	2006	2007	VGA S1AADA/AAGA	746782	**122761670**	746781	**122771670**	
Tkr 50 Rcup	50	2008	2009	-	746782	**122761670**	746781	**122771670**	
Tkr 50 Streetboard	50	2001	2001	VGA S1A0KB	746782	**122761670**	746781	**122771670**	
Tkr 50 Streetzone	50	2003	2003	VGA S1AAAA	746782	**122761670**	746781	**122771670**	
Tkr 50 Wrc 307	50	2005	2005	VGA S1AADA/AAGA	746782	**122761670**	746781	**122771670**	
Trekker 50 Off Road	50	1998	2000	VGA S1A0KB	734966	**122762760**	734967	**122772760**	
Trekker 50 Road	50	1998	2000	VGA S1A0KB	746782	**122761670**	746781	**122771670**	



Modello *Model*	**CC**	**Da** *From*	**A** *To*	**Telaio** *Frame*	**Specchio Sinistro OEM** *Left Mirror OEM*	**Specchio Sinistro Codice RMS** *Left Mirror RMS Code*	**Specchio Destro OEM** *Right Mirror OEM*	**Specchio Destro Codice RMS** *Right Mirror RMS Code*	**Note** *Notes*
Trekker 50 Streetboard	50	1999	2000	VGA S1A0KB	746782	**122761670**	746781	**122771670**	
Tweet 50 / Tweet 50 Evo	50	2010	2018	-	801981	**122762850**	801980	**122772850**	
Tweet 50 Active	50	2018	2018	-	801981	**122762850**	801980	**122772850**	
Tweet 50 Allure	50	2018	2018	-	801981	**122762850**	801980	**122772850**	
Tweet 50 Double Black	50	2016	2017	-	801981	**122762850**	801980	**122772850**	
Tweet 50 Paris	50	2016	2017	-	801981	**122762850**	801980	**122772850**	
Tweet 50 Pro	50	2017	2017	-	801981	**122762850**	801980	**122772850**	
Tweet 50 Rs	50	2011	2018	-	801981	**122762850**	801980	**122772850**	
Vivacity 50	50	1999	2001	VGA S1C0KA	738997	**122760150**	738998	**122770150**	
Vivacity 50	50	2002	2002	VGA S1C0KF	738997	**122760150**	738998	**122770150**	
Vivacity 50 2	50	2008	2009	-	772581	**122761570**	772582	**122771570**	
Vivacity 50 2 Compact	50	2005	2007	-	761702	**122761660**	761701	**122771660**	
Vivacity 50 2 Rs	50	2008	2008	-	761702	**122761660**	761701	**122771660**	
Vivacity 50 2 Sportline 4	50	2006	2009	-	761702	**122761660**	761701	**122771660**	
Vivacity 50 Compact	50	2003	2004	VGA S1C0EA	761702	**122761660**	761701	**122771660**	
Vivacity 50 Sportline	50	2001	2001	VGA S1C0KA	761702	**122761660**	761701	**122771660**	
Vivacity 50 Sportline 2	50	2002	2002	VGA S1C0KF	761702	**122761660**	761701	**122771660**	
Vivacity 50 Sportline 3	50	2003	2003	VGA S1CAAAA	761702	**122761660**	761701	**122771660**	
Vogue 50 Cast Wheel	50	2007	2017	-	746782	**122761670**	746781	**122771670**	
Zenith 50 Lm	50	1996	1997	VGA 441	732513	**122762750**	732512	**122772750**	
Zenith 50 Ln	50	1998	1998	VGA 441	732513	**122762750**	732512	**122772750**	
Zenith 50 M	50	1995	1997	VGA 441	732513	**122762750**	732512	**122772750**	
Zenith 50 N	50	1998	2000	VGA 441	732513	**122762750**	732512	**122772750**	
Speedfight 1 100	100	1998	2000	VGA S2AB	738997	**122760150**	738998	**122770150**	
Speedfight 2 100	100	2001	2002	VGA S2AB	738997	**122760150**	738998	**122770150**	
Speedfight 2 100	100	2003	2004	VGA S2ABK	748211	**122760400**	748212	**122770400**	
Speedfight 2 100	100	2005	2007	VGA S2ABL	748211	**122760400**	748212	**122770400**	
Speedfight 2 100 Rally Victories	100	2006	2007	VGA S2ABL	748211	**122760400**	748212	**122770400**	
Speedfight 2 100 Silver Sport	100	2004	2004	VGA S2ABK	748211	**122760400**	748212	**122770400**	
Speedfight 2 100 Silver Sport	100	2005	2006	VGA S2ABL	748211	**122760400**	748212	**122770400**	
Speedfight 2 100 Wrc 206	100	2004	2004	VGA S2ABK	748211	**122760400**	748212	**122770400**	
Speedfight 2 100 Wrc 307	100	2005	2005	VGA S2ABL	748211	**122760400**	748212	**122770400**	
Speedfight 2 100 X-Race	100	2002	2002	VGA S2AB	748211	**122760400**	748212	**122770400**	
Speedfight 2 100 X-Race	100	2003	2003	VGA S2ABK	748211	**122760400**	748212	**122770400**	
Trekker 100 Road	100	1998	2000	VGA S2AA	746782	**122761670**	746781	**122771670**	
Vivacity 100	100	1999	2002	VGA S2AC	738997	**122760150**	738998	**122770150**	
Vivacity 100	100	2003	2004	VGA S2ACK	738997	**122760150**	738998	**122770150**	
Vivacity 100	100	2005	2007	VGA S2ACL	738997	**122760150**	738998	**122770150**	
Belville 125 Abs	125	2017	2017	-	801981	**122762850**	801980	**122772850**	
Belville 125 Allure Abs	125	2018	2018	-	801981	**122762850**	801980	**122772850**	
Belville 125 Rs Abs	125	2017	2018	-	801981	**122762850**	801980	**122772850**	
Geopolis 125 Ie Evolution Urban Abs	125	2008	2012	VGA N2AABA	774986	**122761560**	-	**-**	
Geopolis 125 Ie Evolution Urban Abs	125	2008	2012	VGA N2AABA	770021	**122761630**	770022	**122771630**	Asta cromata | *Chromed rod*
Geopolis 125 Ie Executive Abs	125	2007	2007	VGA N2AAAA	774986	**122761560**	-	**-**	



SPECCHIETTI RETROVISORI

REAR VIEW MIRRORS

Modello *Model*	**CC**	**Da** *From*	**A** *To*	**Telaio** *Frame*	**Specchio Sinistro OEM** *Left Mirror OEM*	**Specchio Sinistro Codice RMS** *Left Mirror RMS Code*	**Specchio Destro OEM** *Right Mirror OEM*	**Specchio Destro Codice RMS** *Right Mirror RMS Code*	**Note** *Notes*
Geopolis 125 Ie Executive Abs	125	2007	2007	VGA N2AAAA	770021	**122761630**	770022	**122771630**	Asta cromata | *Chromed rod*
Geopolis 125 Ie Executive Abs	125	2008	2010	VGA N2AABA	774986	**122761560**	-	-	
Geopolis 125 Ie Executive Abs	125	2008	2010	VGA N2AABA	770021	**122761630**	770022	**122771630**	Asta cromata | *Chromed rod*
Geopolis 125 Ie Premium	125	2007	2007	VGA N2AAAA	774986	**122761560**	-	-	
Geopolis 125 Ie Premium	125	2007	2007	VGA N2AAAA	770021	**122761630**	770022	**122771630**	Asta cromata | *Chromed rod*
Geopolis 125 Ie Premium	125	2008	2012	VGA N2AABA	774986	**122761560**	-	-	
Geopolis 125 Ie Premium	125	2008	2012	VGA N2AABA	770021	**122761630**	770022	**122771630**	Asta cromata | *Chromed rod*
Jet Force 125 Ie	125	2003	2007	VGA A2ABJB	748211	**122760400**	748212	**122770400**	
Jet Force 125 Ie Abs	125	2003	2007	VGA A2ABJD	748211	**122760400**	748212	**122770400**	
Jet Force 125 Ie K15 Compressor	125	2005	2007	VGA A2ACJB	748211	**122760400**	748212	**122770400**	
Jet Force 125 Ie K20 Compressor	125	2005	2007	VGA A2ADJB	748211	**122760400**	748212	**122770400**	
Looxor 125	125	2003	2005	VGA P2AAAA	746782	**122761670**	746781	**122771670**	
Looxor 125	125	2006	2006	VGA P2AABA	746782	**122761670**	746781	**122771670**	
Tweet 125	125	2011	2014	VGA LW2AAA	801981	**122762850**	801980	**122772850**	
Tweet 125 Abs	125	2018	2018	-	801981	**122762850**	801980	**122772850**	
Tweet 125 Active Sbc	125	2018	2018	-	801981	**122762850**	801980	**122772850**	
Tweet 125 Allure	125	2016	2016	-	801981	**122762850**	801980	**122772850**	
Tweet 125 Allure Sbc	125	2018	2018	-	801981	**122762850**	801980	**122772850**	
Tweet 125 Double Black	125	2016	2016	-	801981	**122762850**	801980	**122772850**	
Tweet 125 Evo	125	2015	2016	-	801981	**122762850**	801980	**122772850**	
Tweet 125 I Double Black Sbc	125	2017	2017	-	801981	**122762850**	801980	**122772850**	
Tweet 125 I Paris Sbc	125	2017	2017	-	801981	**122762850**	801980	**122772850**	
Tweet 125 Paris	125	2016	2017	-	801981	**122762850**	801980	**122772850**	
Tweet 125 Pro	125	2014	2016	-	801981	**122762850**	801980	**122772850**	
Tweet 125 Pro Sbc	125	2017	2017	-	801981	**122762850**	801980	**122772850**	
Tweet 125 Rs	125	2011	2016	VGA LW2AAA	801981	**122762850**	801980	**122772850**	
Tweet 125 Rs Sbc	125	2017	2018	-	801981	**122762850**	801980	**122772850**	
Tweet 125 Sbc	125	2017	2018	-	801981	**122762850**	801980	**122772850**	
Tweet 150 / Tweet Evo 150	150	2011	2016	VGA LW2BAV	801981	**122762850**	801980	**122772850**	
Tweet 150 Abs	150	2017	2018	-	801981	**122762850**	801980	**122772850**	
Tweet 150 Active Abs	150	2018	2018	-	801981	**122762850**	801980	**122772850**	
Tweet 150 Allure Abs	150	2018	2018	-	801981	**122762850**	801980	**122772850**	
Tweet 150 Double Black	150	2016	2017	-	801981	**122762850**	801980	**122772850**	
Tweet 150 Paris	150	2016	2017	-	801981	**122762850**	801980	**122772850**	
Tweet 150 Rs	150	2014	2016	-	801981	**122762850**	801980	**122772850**	
Tweet 150 Rs Abs	150	2017	2018	-	801981	**122762850**	801980	**122772850**	
Belville 200 Abs	200	2017	2018	-	801981	**122762850**	801980	**122772850**	
Belville 200 Allure Abs	200	2018	2018	-	801981	**122762850**	801980	**122772850**	
Belville 200 Rs Abs	200	2018	2018	-	801981	**122762850**	801980	**122772850**	
Geopolis 300 Ie Geostyle	300	2011	2012	-	774986	**122761560**	-	-	
Geopolis 300 Ie Geostyle	300	2011	2012	-	770021	**122761630**	770022	**122771630**	Asta cromata | *Chromed rod*
Geopolis 300 Ie Premium	300	2010	2013	-	774986	**122761560**	-	-	
Geopolis 300 Ie Premium	300	2010	2013	-	770021	**122761630**	770022	**122771630**	Asta cromata | *Chromed rod*
Geopolis 300 Ie Rs Premium	300	2010	2013	-	774986	**122761560**	-	-	



Modello *Model*	**CC**	**Da** *From*	**A** *To*	**Telaio** *Frame*	**Specchio Sinistro OEM** *Left Mirror OEM*	**Specchio Sinistro Codice RMS** *Left Mirror RMS Code*	**Specchio Destro OEM** *Right Mirror OEM*	**Specchio Destro Codice RMS** *Right Mirror RMS Code*	**Note** *Notes*
Geopolis 300 Ie Rs Premium	300	2010	2013	-	770021	**122761630**	770022	**122771630**	Asta cromata | *Chromed rod*
Geopolis 400 Ie Evolution Urban Abs	400	2010	2012	VGA N2AEAA	774986	**122761560**	-	**-**	
Geopolis 400 Ie Evolution Urban Abs	400	2010	2012	VGA N2AEAA	770021	**122761630**	770022	**122771630**	Asta cromata | *Chromed rod*
Geopolis 400 Ie Executive Abs	400	2007	2009	VGA N2AEAA	774986	**122761560**	-	**-**	
Geopolis 400 Ie Executive Abs	400	2007	2009	VGA N2AEAA	770021	**122761630**	770022	**122771630**	Asta cromata | *Chromed rod*
Geopolis 400 Ie Premium	400	2007	2012	VGA N2AEAA	774986	**122761560**	-	**-**	
Geopolis 400 Ie Premium	400	2007	2012	VGA N2AEAA	770021	**122761630**	770022	**122771630**	Asta cromata | *Chromed rod*
Geopolis 400 Ie Rs Premium	400	2008	2012	VGA N2AEAA	774986	**122761560**	-	**-**	
Geopolis 400 Ie Rs Premium	400	2008	2012	VGA N2AEAA	770021	**122761630**	770022	**122771630**	Asta cromata | *Chromed rod*
Geopolis 500 Premium	500	2008	2012	VGA N2AFFA	774986	**122761560**	-	**-**	
Geopolis 500 Premium	500	2008	2012	VGA N2AFFA	770021	**122761630**	770022	**122771630**	Asta cromata | *Chromed rod*
PIAGGIO									
Ape FI - FI2	50	1989	1995	TL6T	182213	**122760010**	182213	**122760010**	
Ape FI3 Europa	50	1996	1999	TL5T	565061	**122760710**	565062	**122770710**	
Ape Mix 2T	50	1998	2008	C8000	565061	**122760710**	565062	**122770710**	
Ape P	50	1980	1985	TL3T	182213	**122760010**	182213	**122760010**	
Ape Rst Mix	50	1999	2003	C8000	565061	**122760710**	565062	**122770710**	
Ape Tm P	50	1985	1989	TL4T	182213	**122760010**	182213	**122760010**	
Fly 2T	50	2005	2007	C44100	CM027001	**122760530**	-	**-**	
Fly 2T	50	2010	2011	C44700	CM027004	**122760530**	CM027005	**122770530**	
Fly 4T	50	2005	2007	C44200	CM027001	**122760530**	-	**-**	
Fly 4T & 25-30 Km/h	50	2008	2011	C44500	CM027001	**122760530**	CM027002	**122770530**	
Fly 4T 2V	50	2013	2015	RP8C523	CM180604	**122762860**	CM180603	**122772860**	
Fly 4T 2V 25-30 Km/h	50	2012	2017	RP8C522	CM180604	**122762860**	CM180603	**122772860**	
Fly 4T 4V	50	2012	2013	RP8C521	CM180604	**122762860**	CM180603	**122772860**	
Fly 4T Motore Chn	50	2006	2007	C44500	CM027001	**122760530**	-	**-**	
Free Delivery	50	2000	2001	FCS2T	582891	**122760950**	582892	**122770950**	
Free FI	50	1995	2002	FCS2T	582891	**122760950**	582892	**122770950**	
Liberty	50	1997	2005	C1500	583031	**122760070**	583033	**122770070**	
Liberty 2T	50	2006	2006	C42100	CM020401	**122760670**	-	**-**	
Liberty 2T	50	2007	2008	C42500	CM020401	**122760670**	-	**-**	
Liberty 2T Rst	50	2004	2004	C42100	CM020401	**122760670**	-	**-**	
Liberty 2T Sport	50	2006	2006	C42106	CM020407	**122760830**	CM020408	**122770830**	
Liberty 2T Sport	50	2007	2008	C42501	CM020407	**122760830**	CM020408	**122770830**	
Liberty 4T	50	2000	2002	C2800	583031	**122760070**	583033	**122770070**	
Liberty 4T	50	2005	2008	C42400	CM020401	**122760670**	-	**-**	
Liberty 4T Delivery - Single	50	2010	2010	C42401	622830	**122760840**	599361	**122770840**	
Liberty 4T Delivery - Single	50	2011	2014	C42401	CM020410	**122761160**	CM020411	**122771160**	
Liberty 4T Delivery Tnt	50	2009	2009	C42401	CM020401	**122760670**	CM020402	**122770670**	
Liberty 4T Ptt - Double - Nexive	50	2009	2015	C42402\C42404	CM020401	**122760670**	CM020402	**122770670**	
Liberty 4T Ptt - Double - Nexive	50	2009	2017	C42402\C42404	CM020410	**122761160**	CM020411	**122771160**	
Liberty 4T Ptt (Deu)	50	2007	2012	C42406	CM020410	**122761160**	CM020411	**122771160**	
Liberty 4T Rst	50	2004	2004	C42200	CM020401	**122760670**	-	**-**	
Liberty 4T Sport	50	2006	2006	C42405	CM020407	**122760830**	CM020408	**122770830**	
Liberty 4T Sport	50	2007	2008	C42405	CM020407	**122760830**	CM020408	**122770830**	



SPECCHIETTI RETROVISORI

REAR VIEW MIRRORS

Modello *Model*	**CC**	**Da** *From*	**A** *To*	**Telaio** *Frame*	**Specchio Sinistro OEM** *Left Mirror OEM*	**Specchio Sinistro Codice RMS** *Left Mirror RMS Code*	**Specchio Destro OEM** *Right Mirror OEM*	**Specchio Destro Codice RMS** *Right Mirror RMS Code*	**Note** *Notes*
Liberty Iget 4T 3V Ie	50	2015	2016	RP8C54100	CM020417	**122762530**	CM020418	**122772530**	
Liberty Moc 2T & Elle	50	2009	2011	C49100	CM020401	**122760670**	CM020402	**122770670**	
Liberty Moc 2T & Elle	50	2011	2013	C49100	CM020410	**122761160**	CM020411	**122771160**	
Liberty Moc 4T & Elle	50	2009	2016	C49200	CM020410	**122761160**	CM020411	**122771160**	
Nrg	50	1994	1996	SAL1T	271022	**122760060**	271018	**122770060**	
Nrg Extreme	50	1999	2000	-	563492	**122760700**	563496	**122770700**	
Nrg Mc3	50	2001	2004	C320\210	563492	**122760700**	563496	**122770700**	
Nrg Power Dd	50	2005	2015	C45100	CM073001	**122760420**	CM073002	**122770420**	
Nrg Power Dd Serie Speciale	50	2007	2012	C45100	CM073001	**122760420**	CM073002	**122770420**	
Nrg Power Dt	50	2006	2015	C45300	CM073001	**122760420**	CM073002	**122770420**	
Nrg Power Dt Serie Speciale	50	2007	2008	C45300	CM073001	**122760420**	CM073002	**122770420**	
Nrg Power Purejet	50	2004	2011	C45200	CM073001	**122760420**	CM073002	**122770420**	
Nrg Purejet	50	2002	2002	C320001	563492	**122760700**	563496	**122770700**	
Nrg Purejet	50	2003	2003	C320001	CM073001	**122760420**	CM073002	**122770420**	
Nrg Purejet	50	2004	2004	C320001	563492	**122760700**	563496	**122770700**	
Nrg Purejet	50	2010	2010	C45200	CM073001	**122760420**	CM073002	**122770420**	
Nrg Rst Mc2	50	1996	1998	C04000	271022	**122760060**	271018	**122770060**	
Nrg Rst Mc2	50	1996	1998	C04000	563492	**122760700**	563496	**122770700**	
Ntt	50	1995	1996	SAL1T	271022	**122760060**	271018	**122770060**	
Quartz	50	1992	1996	NSP1T	563492	**122760700**	563496	**122770700**	
Typhoon	50	2001	2004	C29000	271022	**122760060**	271018	**122770060**	
Typhoon	50	2005	2008	C29000	CM073001	**122760420**	CM073002	**122770420**	
Typhoon	50	2009	2011	C48100	CM073001	**122760420**	CM073002	**122770420**	
Vespa Et2	50	1997	1998	C1600\38100	563866	**122760490**	563865	**122770490**	
Vespa Et2	50	1999	2001	C1600\38100	581554	**122760510**	581555	**122770510**	
Vespa Et2	50	2002	2005	C1600\38100	563866	**122760490**	563865	**122770490**	
Vespa Et2 Iniezione	50	1997	2000	C1200	563866	**122760490**	563865	**122770490**	
Vespa Et4	50	2000	2005	C26100	581554	**122760510**	581555	**122770510**	
Vespa Lx 2T	50	2005	2008	C38101	CM020404	**122760590**	CM020405	**122770590**	
Vespa Lx 2T	50	2009	2012	C38101	CM020404	**122760590**	CM179802	**122770660**	
Vespa Lx 2T	50	2009	2013	C38101	CM179801	**122760660**	CM020405	**122770590**	
Vespa Lx 2T	50	2012	2013	C38101	CM020412	**122761170**	CM179802	**122770660**	
Vespa Lx 2T Touring & 30Km	50	2010	2011	C38101	CM179801	**122760660**	CM179802	**122770660**	
Vespa Lx 2T Touring & 30Km	50	2012	2013	C38101	CM020412	**122761170**	CM020405	**122770590**	
Vespa Lx 4T	50	2005	2009	C38300	CM020404	**122760590**	CM020405	**122770590**	
Vespa Lx 4T-4V	50	2009	2012	C38700	CM020404	**122760590**	CM179802	**122770660**	
Vespa Lx 4T-4V	50	2009	2013	C38700	CM179801	**122760660**	CM020405	**122770590**	
Vespa Lx 4T-4V	50	2012	2013	C38700	CM020412	**122761170**	CM179802	**122770660**	
Vespa Lx 4T-4V Touring	50	2010	2011	C38700	CM179801	**122760660**	CM179802	**122770660**	
Vespa Lx 4T-4V Touring	50	2011	2013	C38700	CM020412	**122761170**	CM020405	**122770590**	
Vespa Lxv 2T	50	2006	2009	C38102	CM073413	**122760680**	CM073414	**122770680**	
Vespa Lxv 2T Navy	50	2008	2008	C38102	CM073413	**122760680**	CM073414	**122770680**	
Vespa Pk Xl Plurimatic	50	1985	1990	VA52T	244141	**122760110**	244141	**122760110**	
Vespa Primavera 2T	50	2013	2016	C53200	CM182101	**122761200**	CM261902	**122771200**	
Vespa Primavera 4T-4V	50	2013	2016	C53100	CM261901	**122761200**	CM261902	**122771200**	
Vespa S 2T & College	50	2007	2012	C38103	CM178901	**122760270**	CM178902	**122770270**	
Vespa S 4T-4V & College	50	2008	2012	M38600	CM178901	**122760270**	CM178902	**122770270**	
Vespa Sprint 2T 2V	50	2014	2016	C53201	CM262001	**122762540**	CM262002	**122772540**	
Vespa Sprint 4T 3V 25 Km/h E4	50	2017	2019	CA0201	CM262001	**122762540**	CM262002	**122772540**	Cromato | *Chromed*



Modello *Model*	**CC**	**Da** *From*	**A** *To*	**Telaio** *Frame*	**Specchio Sinistro OEM** *Left Mirror OEM*	**Specchio Sinistro Codice RMS** *Left Mirror RMS Code*	**Specchio Destro OEM** *Right Mirror OEM*	**Specchio Destro Codice RMS** *Right Mirror RMS Code*	**Note** *Notes*
Vespa Sprint 4T 3V 25 Km/h E4	50	2017	2019	CA0201	CM262013	**122762880**	CM262014	**122772880**	Nero | *Black*
Vespa Sprint 4T 4V	50	2014	2016	C53101	CM262001	**122762540**	CM262002	**122772540**	
Vespa Sprint 4T-3V E4	50	2017	2019	CA0101	CM262001	**122762540**	CM262002	**122772540**	Cromato | *Chromed*
Vespa Sprint 4T-3V E4	50	2017	2019	CA0101	CM262013	**122762880**	CM262014	**122772880**	Nero | *Black*
Zip	50	1995	1996	SSP2T	563492	**122760700**	563496	**122770700**	
Zip	50	2000	2004	C25000	CM063901	**122760520**	CM063902	**122770520**	
Zip 4T	50	2000	2005	C25000	CM063901	**122760520**	CM063902	**122770520**	
Zip 4T	50	2006	2013	LBMC25C	CM063901	**122760520**	CM063902	**122770520**	
Zip 4T 25Km/h	50	2006	2016	-	CM063901	**122760520**	CM063902	**122770520**	
Zip Fast Raider	50	1993	1994	SSP1T	563492	**122760700**	563496	**122770700**	
Zip Fast Raider Rst	50	1996	1997	C0700	563492	**122760700**	563496	**122770700**	
Zip Rst	50	1996	1999	C0600	563492	**122760700**	563496	**122770700**	
Zip Sp	50	1996	2000	C1100	563492	**122760700**	-	-	
Zip Sp	50	2001	2004	C250004	CM063901	**122760520**	CM063902	**122770520**	
Zip Sp Euro2	50	2006	2013	C25000	CM063901	**122760520**	CM063902	**122770520**	
Skr City	80	1999	1999	SP81T	563492	**122760700**	563496	**122770700**	
Fly 4T	100	2006	2007	M53100	CM027001	**122760530**	CM027002	**122770530**	
Fly 4T	100	2008	2008	M53100	CM027004	**122760530**	CM027005	**122770530**	
Free	100	2002	2003	M2910	582891	**122760950**	582892	**122770950**	
Zip 4T	100	2006	2010	M25200	CM063901	**122760520**	CM063902	**122770520**	
Beverly Euro 3	125	2007	2008	M28900	CM025501	**122760450**	CM025502	**122770450**	
Beverly Rst	125	2004	2007	M28400	CM025501	**122760450**	CM025502	**122770450**	
Beverly Rst 4T 4V Ie Euro3	125	2010	2013	ZAMP69100	CM179904	**122760770**	CM179905	**122770770**	
Beverly Rst 4T 4V Ie Euro3	125	2013	2015	ZAMP69100	CM179907	**122762870**	CM179908	**122772870**	
Beverly Tourer Euro3	125	2007	2010	M28901	CM071904	**122760440**	CM071905	**122770440**	
Carnaby	125	2007	2010	M60200	CM174705	**122760410**	CM174706	**122770410**	
Fly	125	2005	2007	M42100	CM027001	**122760530**	CM027002	**122770530**	
Fly 4T 3V Ie E3 Dt	125	2013	2015	-	CM180604	**122762860**	CM180603	**122772860**	
Fly 4T 3V Ie Euro3 Lem	125	2012	2013	RP8M791	CM180604	**122762860**	CM180603	**122772860**	
Fly Euro3	125	2007	2007	M57100	CM027001	**122760530**	CM027002	**122770530**	
Fly Euro3	125	2008	2011	M57200	CM027001	**122760530**	CM027002	**122770530**	
Liberty	125	1998	2000	M1100	583031	**122760070**	-	-	
Liberty	125	2001	2002	M2200	583031	**122760070**	583033	**122770070**	
Liberty 4T	125	2006	2007	M38100	CM020401	**122760670**	CM020402	**122770670**	
Liberty 4T 2V Euro3	125	2009	2012	M67100	CM020401	**122760670**	CM020402	**122770670**	
Liberty 4T 2V Ie Ptt - Ita	125	2012	2013	M38900	CM020410	**122761160**	CM020411	**122771160**	
Liberty 4T 3V Ie E3	125	2013	2014	M73400	CM020401	**122760670**	CM020402	**122770670**	
Liberty 4T Euro3	125	2006	2008	M38600	CM020401	**122760670**	CM020402	**122770670**	
Liberty 4T Euro3 Delivery - Single	125	2007	2015	M38602	622830	**122760840**	599361	**122770840**	Nero | *Black*
Liberty 4T Euro3 Delivery - Single	125	2007	2015	M38602	CM020410	**122761160**	CM020411	**122771160**	Cromato | *Chromed*
Liberty 4T Euro3 Delivery - Tnt - Nexive	125	2008	2015	P38602	CM020401	**122760670**	CM020402	**122770670**	
Liberty 4T Sport Euro3	125	2006	2008	M38601	CM020407	**122760830**	CM020408	**122770830**	
Liberty Iget 4T 3V Ie	125	2015	2015	RP8M89100	CM020417	**122762530**	CM020418	**122772530**	
Liberty Rst	125	2004	2005	M38100	CM020401	**122760670**	CM020402	**122770670**	
Liberty Rst Ptt	125	2005	2011	M38103	CM020401	**122760670**	CM020402	**122770670**	
Liberty Sport	125	2006	2006	M38104	CM020407	**122760830**	CM020408	**122770830**	
Mp3	125	2006	2008	M47300	CM174708	**122760430**	CM174709	**122770430**	
Mp3 Ibrido	125	2009	2010	M65100	CM174708	**122760430**	CM174709	**122770430**	
Mp3 Ie	125	2008	2009	M63100	CM174708	**122760430**	CM174709	**122770430**	



SPECCHIETTI RETROVISORI

REAR VIEW MIRRORS

Modello *Model*	**CC**	**Da** *From*	**A** *To*	**Telaio** *Frame*	**Specchio Sinistro OEM** *Left Mirror OEM*	**Specchio Sinistro Codice RMS** *Left Mirror RMS Code*	**Specchio Destro OEM** *Right Mirror OEM*	**Specchio Destro Codice RMS** *Right Mirror RMS Code*	**Note** *Notes*
Mp3 Ie Touring	125	2011	2012	M63100	CM174708	**122760430**	CM174709	**122770430**	
Mp3 Yourban Erl	125	2011	2013	M71200	CM175019	**122760970**	CM175020	**122770970**	
Skipper	125	1994	1997	CSM1T\CVM1T	563492	**122760700**	563496	**122770700**	
Vespa Et4	125	1996	1998	M0400	563866	**122760490**	563865	**122770490**	
Vespa Et4	125	1999	2002	M1900	581554	**122760510**	581555	**122770510**	
Vespa Granturismo	125	2003	2005	M311\312	CM027704	**122760690**	CM027705	**122770690**	
Vespa Granturismo	125	2006	2007	M31101	CM027704	**122760690**	CM027705	**122770690**	
Vespa Granturismo Euro 3	125	2006	2007	M31300	CM027704	**122760690**	CM027705	**122770690**	
Vespa Gts 4T Ie Super	125	2009	2016	M45300	CM179801	**122760660**	CM179802	**122770660**	
Vespa Gts Ie Abs E4	125	2016	2017	MA3100\3200	CM073427	**122762740**	CM073428	**122772740**	
Vespa Gtv	125	2006	2008	M31301	CM073413	**122760680**	CM073414	**122770680**	
Vespa Gtv 4T Navy Euro3	125	2008	2008	M31301	CM073413	**122760680**	CM073414	**122770680**	
Vespa Lx	125	2005	2006	M44100	CM020404	**122760590**	CM020405	**122770590**	
Vespa Lx 4T Euro3 Touring	125	2010	2011	M68100	CM179801	**122760660**	CM179802	**122770660**	
Vespa Lx 4T Euro3 Touring	125	2011	2011	M68100	CM020412	**122761170**	CM020405	**122770590**	
Vespa Lx 4T FI	125	2009	2009	M44100	CM020404	**122760590**	CM020405	**122770590**	
Vespa Lx Euro 3	125	2006	2008	M44300	CM020404	**122760590**	CM020405	**122770590**	
Vespa Lx Euro 3 Ie	125	2009	2011	M68100	CM020404	**122760590**	CM020405	**122770590**	
Vespa Lx Euro 3 Ie	125	2010	2011	M68100	CM179801	**122760660**	CM179802	**122770660**	
Vespa Lx Euro 3 Ie	125	2011	2011	M68100	CM020412	**122761170**	CM020405	**122770590**	
Vespa Lx Primavera 4T 3V Ie	125	2013	2016	M81100	CM182101	**122761200**	CM261902	**122771200**	
Vespa Lxv 4T Euro3	125	2006	2009	M44301	CM073413	**122760680**	CM073414	**122770680**	
Vespa Lxv 4T Navy Euro3	125	2007	2008	M44301	CM073413	**122760680**	CM073414	**122770680**	
Vespa Lxv Ie 4T	125	2010	2011	P68102	CM073413	**122760680**	CM073414	**122770680**	
Vespa Lxv Ie 4T	125	2011	2013	P68102	CM073418	**122762050**	CM073419	**122772050**	
Vespa Px	125	1998	2001	VNX2\VLX1\VSX1	CM028001	**122760790**	CM028002	**122770790**	
Vespa Px	125	2011	2016	M74100	CM028001	**122760790**	CM028002	**122770790**	
Vespa Px 30 Anni	125	2007	2008	M09302	CM028001	**122760790**	CM028002	**122770790**	
Vespa Px T5	125	1985	1989	VNX5T	244141	**122760110**	244141	**122760110**	
Vespa S 4T 3V Ie	125	2012	2012	MM68301	CM178901	**122760270**	CM178902	**122770270**	
Vespa S 4T Euro 3	125	2007	2008	M44302	CM178901	**122760270**	CM178902	**122770270**	
Vespa S 4T Ie & College	125	2009	2011	M68101	CM178901	**122760270**	CM178902	**122770270**	
Vespa Sprint 4T 3V Ie	125	2014	2015	M81300\01	CM262001	**122762540**	CM262002	**122772540**	
Vespa Sprint Iget 4T 3V Abs	125	2016	2016	MA1300	CM262001	**122762540**	CM262002	**122772540**	
Vespa Sprint Iget 4T 3V Abs (Emea)	125	2016	2019	MA1300	CM262001	**122762540**	CM262002	**122772540**	Cromato | *Chromed*
Vespa Sprint Iget 4T 3V Abs (Emea)	125	2016	2019	MA1300	CM262013	**122762880**	CM262014	**122772880**	Nero | *Black*
X Evo	125	2007	2016	M36601	CM180302	**122760960**	CM180301	**122770960**	
X10 4T 4V Ie Euro3	125	2012	2013	M76101	CM182002	**122761120**	CM182006	**122771120**	
X7 Euro 3	125	2008	2008	M62100	CM175011	**122760760**	CM175012	**122770760**	
X7 Evo Ie Euro 3	125	2009	2010	M62101	CM175011	**122760760**	CM175012	**122770760**	
X8	125	2004	2004	PM36200\PM36300	CM073902	**122760470**	CM073901	**122770470**	
X8	125	2005	2006	M36301	CM174802	**122760470**	CM174801	**122770470**	
X8 Premium Euro 2	125	2006	2006	M36301	CM174802	**122760470**	CM174801	**122770470**	
X8 Premium Euro 3	125	2006	2007	M36600	CM174802	**122760470**	CM174801	**122770470**	
X8 Street Euro 2	125	2006	2007	M49100	CM174802	**122760470**	CM174801	**122770470**	
X9	125	2001	2002	M2300001	581501	**122760480**	581500	**122770480**	
Zip	125	2000	2002	M2500	CM063901	**122760520**	CM063902	**122770520**	
Fly	150	2005	2007	M42200	CM027001	**122760530**	CM027002	**122770530**	
Fly Euro3	150	2008	2011	M57100	CM027001	**122760530**	CM027002	**122770530**	



Modello *Model*	**CC**	**Da** *From*	**A** *To*	**Telaio** *Frame*	**Specchio Sinistro OEM** *Left Mirror OEM*	**Specchio Sinistro Codice RMS** *Left Mirror RMS Code*	**Specchio Destro OEM** *Right Mirror OEM*	**Specchio Destro Codice RMS** *Right Mirror RMS Code*	**Note** *Notes*
Liberty 4T 3V Lem	150	2013	2014	M73500	CM020401	**122760670**	CM020402	**122770670**	
Liberty 4T Euro3	150	2008	2008	M38700	CM020401	**122760670**	CM020402	**122770670**	
Liberty 4T Sport Euro3	150	2008	2008	M38701	CM020407	**122760830**	CM020408	**122770830**	
Liberty Iget 4T 3V Ie	150	2015	2016	RP8M89200	CM020417	**122762530**	CM020418	**122772530**	
Liberty Moc 4T Euro3	150	2009	2013	M67200	CM020401	**122760670**	CM020402	**122770670**	
Vespa Gts 4T E4 Abs (Emea)	150	2016	2017	MA3100\3200	CM073427	**122762740**	CM073428	**122772740**	
Vespa Lx	150	2005	2006	M44200	CM020404	**122760590**	CM020405	**122770590**	
Vespa Lx 4T 3V Ie - Touring	150	2012	2013	-	CM020412	**122761170**	CM020405	**122770590**	
Vespa Lx 4T 3V Ie - Touring	150	2012	2013	M68400	CM020412	**122761170**	CM020405	**122770590**	
Vespa Lx 4T FI	150	2009	2009	M44400	CM020404	**122760590**	CM020405	**122770590**	
Vespa Lx Euro 3	150	2006	2008	M44400	CM020404	**122760590**	CM020405	**122770590**	
Vespa Lx Euro 3 Ie	150	2009	2010	M68200	CM020404	**122760590**	CM020405	**122770590**	
Vespa Lx Euro 3 Ie	150	2011	2011	M68200	CM179801	**122760660**	CM179802	**122770660**	
Vespa Lx Touring	150	2010	2012	M68200	CM179801	**122760660**	CM179802	**122770660**	
Vespa Primavera 4T 3V Iget Abs	150	2016	2016	-	CM261901	**122761200**	CM261902	**122771200**	
Vespa Primavera 4T-3V	150	2013	2016	M81200	CM182101	**122761200**	CM261902	**122771200**	
Vespa Px	150	2011	2016	M74200	CM181301	**122760790**	CM181302	**122770790**	
Vespa S 4T	150	2008	2009	M44402	CM178901	**122760270**	CM178902	**122770270**	
Vespa S 4T Ie & College	150	2009	2012	M68201	CM178901	**122760270**	CM178902	**122770270**	
Vespa Sprint Sport 4T 3V Iget Abs	150	2016	2016	MA1400	CM262001	**122762540**	CM262002	**122772540**	
X8 Street Euro 2	150	2006	2008	M49200	CM174802	**122760470**	CM174801	**122770470**	
X9 Amalfi	180	2000	2003	M2300002	581501	**122760480**	581500	**122770480**	
Carnaby	200	2007	2008	M60100	CM174705	**122760410**	CM174706	**122770410**	
Liberty	200	2006	2006	M38400	CM020401	**122760670**	CM020402	**122770670**	
Liberty 4T Euro3	200	2006	2008	M38500	CM020401	**122760670**	CM020402	**122770670**	
Liberty 4T Sport Euro3	200	2006	2007	M38501	CM020407	**122760830**	CM020408	**122770830**	
Liberty Rst	200	2004	2004	M3840001	CM020401	**122760670**	CM020402	**122770670**	
Liberty Sport	200	2006	2006	M38401	CM020407	**122760830**	CM020408	**122770830**	
Vespa Granturismo	200	2006	2007	M31200	CM027704	**122760690**	CM027705	**122770690**	
X8	200	2005	2007	M36200	CM174802	**122760470**	CM174801	**122770470**	
X9	200	2002	2003	M2300003	581501	**122760480**	581500	**122770480**	
Ape Mp P501-P601	220	1978	1996	MPR2-M2-V2	182213	**122760010**	182213	**122760010**	
Ape Tm P703 FI2	220	1999	2007	ATM2T\3T	565061	**122760710**	-	-	
Beverly	250	2006	2007	M28500	CM025501	**122760450**	CM025502	**122770450**	
Beverly Cruiser	250	2007	2008	M28802	CM178802	**122760740**	CM178001	**122770740**	
Beverly Ie Euro 3	250	2006	2008	M28800	CM025501	**122760450**	CM025502	**122770450**	
Beverly Rst	250	2004	2005	M28500	CM025501	**122760450**	CM025502	**122770450**	
Beverly Tourer Euro3	250	2007	2009	M28801	CM071904	**122760440**	CM071905	**122770440**	
Carnaby	250	2008	2008	M60300	CM174705	**122760410**	CM174706	**122770410**	
Mp3	250	2006	2008	M47201	CM174708	**122760430**	CM174709	**122770430**	
Mp3 Lt	250	2008	2009	M64100	CM174708	**122760430**	CM174709	**122770430**	
Mp3 Mic	250	2008	2009	M63200	CM174708	**122760430**	CM174709	**122770430**	
Vespa Gt 60 Euro 3	250	2006	2007	M45102	CM073413	**122760680**	CM073414	**122770680**	
Vespa Gtv	250	2006	2009	M45102	CM073413	**122760680**	CM073414	**122770680**	
Vespa Gtv 4T Navy Euro3	250	2007	2007	M45102	CM073413	**122760680**	CM073414	**122770680**	
X Evo	250	2007	2016	M36401	CM180302	**122760960**	CM180301	**122770960**	
X7 Euro 3	250	2008	2008	M62200	CM175011	**122760760**	CM175012	**122770760**	
X8 Euro3	250	2005	2008	M36400	CM174802	**122760470**	CM174801	**122770470**	
X9	250	2000	2001	M23000	581501	**122760480**	581500	**122770480**	
Beverly Ie Abs E4	300	2016	2016	A2100	CM179904	**122760770**	CM179905	**122770770**	



SPECCHIETTI RETROVISORI

REAR VIEW MIRRORS

Modello *Model*	**CC**	**Da** *From*	**A** *To*	**Telaio** *Frame*	**Specchio Sinistro OEM** *Left Mirror OEM*	**Specchio Sinistro Codice RMS** *Left Mirror RMS Code*	**Specchio Destro OEM** *Right Mirror OEM*	**Specchio Destro Codice RMS** *Right Mirror RMS Code*	**Note** *Notes*
Beverly Ie Abs E4 (Emea)	300	2016	2018	A2100	CM179907	**122762870**	CM179908	**122772870**	Nero | *Black*
Beverly Rst 4T 4V Ie Euro3	300	2010	2015	ZAMP69200	CM179904	**122760770**	CM179905	**122770770**	
Beverly Rst 4T 4V Ie Euro3	300	2010	2016	ZAMP69200	CM179907	**122762870**	CM179908	**122772870**	
Beverly Tourer Euro3	300	2009	2010	M28A00	CM071904	**122760440**	CM071905	**122770440**	
Carnaby Cruiser	300	2009	2012	M60400	CM179901	**122760780**	CM179902	**122770780**	
Mp3 300 Ie Lt	300	2010	2011	M64102	CM174708	**122760430**	CM174709	**122770430**	
Mp3 300 Ie Mic	300	2010	2011	M63301	CM174708	**122760430**	CM174709	**122770430**	
Mp3 300 Lt Business - Sport Abs - Enjoy	300	2014	2016	M86200	CM174708	**122760430**	CM174709	**122770430**	
Mp3 4T 4V Ie Erl Ibrido	300	2010	2013	M72100	CM174708	**122760430**	CM174709	**122770430**	
Mp3 4T 4V Ie Lt Ibrido	300	2010	2011	M72100	CM174708	**122760430**	CM174709	**122770430**	
Mp3 Ie E4 Lt Business - Sport Abs	300	2016	2016	-	CM175019	**122760970**	CM175020	**122770970**	
Mp3 Ie Lt- Ie Lt Sport	300	2011	2014	M64102	CM175019	**122760970**	CM175020	**122770970**	
Mp3 Ie Lt Touring	300	2011	2013	M64102	CM174708	**122760430**	CM174709	**122770430**	
Mp3 Ie Touring	300	2011	2012	M63301	CM174708	**122760430**	CM174709	**122770430**	
Mp3 Yourban Erl	300	2011	2015	M71200	CM175019	**122760970**	CM175020	**122770970**	
Mp3 Yourban Lt Erl	300	2011	2012	M75100	CM175019	**122760970**	CM175020	**122770970**	
Vespa Gts Ie Abs E4 (Emea)	300	2016	2017	MA3300	CM073427	**122762740**	CM073428	**122772740**	
Vespa Gtv 4T 4V Ie	300	2010	2012	M4520	CM073413	**122760680**	CM073414	**122770680**	
Vespa Gtv 4T 4V Ie	300	2012	2013	M4520	CM073418	**122762050**	CM073419	**122772050**	
Vespa Gtv Via Montenapoleone	300	2010	2010	M45201	CM073413	**122760680**	CM073414	**122770680**	
X7 Evo Ie Euro 3	300	2009	2010	M62201	CM175011	**122760760**	CM175012	**122770760**	
Beverly 4T 4V Ie Euro3 Sport Touring	350	2011	2014	M6930	CM179907	**122762870**	CM179908	**122772870**	
Beverly 4T St Ie Abs	350	2016	2018	MA2200	CM179907	**122762870**	CM179908	**122772870**	
X10 4T 4V Ie Euro3	350	2012	2015	M76201\M76200	CM182002	**122761120**	CM182003	**122771120**	
Beverly Euro 3	400	2006	2007	M34300	CM071907	**122760340**	CM071908	**122770340**	
Beverly Tourer Euro3	400	2008	2010	M34400	CM071904	**122760440**	CM071905	**122770440**	
Mp3	400	2007	2008	M59100\01	CM174708	**122760430**	CM174709	**122770430**	
Mp3 Ie Lt - Mp3 Ie Lt Sport	400	2008	2010	M64200	CM174708	**122760430**	CM174709	**122770430**	
Mp3 Ie Lt Touring	400	2011	2011	M64200	CM174708	**122760430**	CM174709	**122770430**	
Mp3 Mic	400	2008	2010	M59102	CM174708	**122760430**	CM174709	**122770430**	
Mp3 Rl Touring	400	2011	2011	M59101	CM174708	**122760430**	CM174709	**122770430**	
X Evo	400	2007	2011	M52101	CM180302	**122760960**	CM180301	**122770960**	
X8 Euro3	400	2006	2008	M52100	CM174802	**122760470**	CM174801	**122770470**	
Beverly	500	2002	2006	M34100	CM071901	**122760440**	CM071902	**122770440**	
Beverly Cruiser	500	2007	2007	M34500	CM178802	**122760740**	CM178001	**122770740**	
Beverly Cruiser	500	2008	2012	M34500	CM071913	**122760930**	CM071914	**122770930**	
Beverly Euro 3	500	2006	2008	M34200	CM071901	**122760440**	CM071905	**122770440**	
Mp3 Lt Business Abs	500	2014	2016	M86100	CM174708	**122760430**	CM174709	**122770430**	
Mp3 Lt Sport - Business	500	2011	2013	M64300	CM174708	**122760430**	CM174709	**122770430**	
Mp3 Lt Sport - Business	500	2011	2013	M64300	CM175019	**122760970**	CM175020	**122770970**	Modello Sport | *Sport Model*
Mp3 Rl Sport - Business	500	2011	2012	M59200	CM174708	**122760430**	CM174709	**122770430**	Modello Business | *Business model*
Mp3 Rl Sport - Business	500	2011	2012	M59200	CM175019	**122760970**	CM175020	**122770970**	
Mp3 Sport Abs	500	2014	2015	M86100	CM175019	**122760970**	CM175020	**122770970**	
X10 4T 4V Ie Euro3	500	2012	2014	M76300	CM182002	**122761120**	CM182006	**122771120**	



Modello *Model*	CC	Da *From*	A *To*	Telaio *Frame*	Specchio Sinistro OEM *Left Mirror OEM*	Specchio Sinistro Codice RMS *Left Mirror RMS Code*	Specchio Destro OEM *Right Mirror OEM*	Specchio Destro Codice RMS *Right Mirror RMS Code*	Note *Notes*
SACHS									
Limbo 25 Ma	25	1996	1997	423	-	**122762750**	-	**122772750**	
Limbo 25 Sa	25	1998	2000	423	-	**122762750**	-	**122772750**	
Limbo 50 Lm	50	1997	1997	441	-	**122762750**	-	**122772750**	
Limbo 50 M	50	1996	1997	441	-	**122762750**	-	**122772750**	
Reggae 50	50	1996	1997	427	-	**122762750**	-	**122772750**	
Reggae 50 Rs	50	1996	1997	427	-	**122762750**	-	**122772750**	
Squab 50	50	1997	1997	S1A03	-	**122762760**	-	**122772760**	
SUZUKI									
Uk110Ne Address L5	110	2015	2015	DE111	56600-10JF0-000	**122762670**	56500-10JF0-000	**122772670**	
Uk110Ne Address L6	110	2016	2016	DE111	56600-10JF0-000	**122762670**	56500-10JF0-000	**122772670**	
Uk110Nx Address L5	110	2015	2015	DE111	56600-10JF0-000	**122762670**	56500-10JF0-000	**122772670**	
Uh125 Burgman K7-L0	125	2007	2010	CC111\CC112	56600-49F10-000	**122761680**	56500-49F10-000	**122771680**	
Uh125 Burgman L1	125	2011	2012	CC111\CC112	56600-49F10-000	**122761680**	56500-49F10-000	**122771680**	
Uh125 Burgman L3	125	2013	2013	CC111\CC112	56600-49F10-000	**122761680**	56500-49F10-000	**122771680**	
Uh125 Burgman L4	125	2014	2014	C8111\C8112	56600-12J00-000	**122762580**	56500-12J00-000	**122772580**	
Ux Sixteen K8-L0	125	2008	2010	CN111	56600-39CF0-000	**122761020**	56500-39CF0-000	**122771020**	
Ux Sixteen L1	125	2011	2011	CN111	56600-39CF0-000	**122761020**	56500-39CF0-000	**122771020**	
Ux Sixteen K8-L0	150	2008	2010	CP111	56600-39CF0-000	**122761020**	56500-39CF0-000	**122771020**	
Ux Sixteen L1	150	2011	2011	CP111	56600-39CF0-000	**122761020**	56500-39CF0-000	**122771020**	
Uh200 Burgman K7-L0	200	2007	2010	CD111\CD112	56600-49F10-000	**122761680**	56500-49F10-000	**122771680**	
Uh200 Burgman L1	200	2011	2012	CD111\CD112	56600-49F10-000	**122761680**	56500-49F10-000	**122771680**	
Uh200 Burgman L3	200	2013	2013	CD111\CD112	56600-49F10-000	**122761680**	56500-49F10-000	**122771680**	
Uh200 Burgman L4	200	2014	2014	C9111\C9112	56600-12J00-000	**122762580**	56500-12J00-000	**122772580**	
An250 Burgman W-K2	250	1998	2002	AN111	56600-03F00-000	**122760890**	56500-03F00-000	**122770890**	
Dl250A V-Strom	250	2018	2018	DS12A	56600-48H10-000	**122762660**	56500-48H10-000	**122772660**	
Gw250 Inazuma L7	250	2017	2017	DC111	56600-48H10-000	**122762660**	56500-48H10-000	**122772660**	
Gw250F Inazuma L5	250	2015	2015	DC112	56600-48H10-000	**122762660**	56500-48H10-000	**122772660**	
Gw250F Inazuma L7	250	2017	2017	DC112	56600-48H10-000	**122762660**	56500-48H10-000	**122772660**	
An400 Burgman X-K2	400	1999	2002	AU111	56600-03F00-000	**122760890**	56500-03F00-000	**122770890**	
Gsf600 Bandit Y-K4	600	2000	2004	A8111\A8112\A8113	56600-31F00-000	**122761840**	56500-31F00-000	**122771840**	
Gsr600 K6-L0	600	2006	2010	B9111\B9211	56600-38G11-000	**122761440**	56500-38G11-000	**122771440**	
Gsx-R600 K1-K3	600	2001	2001	BG111\BG121\BG211	56600-24F00-000	**122762030**	56500-24F00-000	**122772030**	
Gsx-R600 K1-K3	600	2002	2003	BG111\BG121\BG211	56600-40F10-000	**122761990**	56500-40F10-000	**122771990**	
Gsx-R600 K4-K5	600	2004	2005	B2111\B2121\B2211	56600-29G10-000	**122761970**	56500-29G10-000	**122771970**	
Dl650 V-Strom K4-K6	650	2004	2006	B1111\B1211\B1121	56600-04F20-000	**122761420**	56500-04F20-000	**122771420**	
Dl650 V-Strom K7-L0	650	2007	2010	B1111\B1211\B1112	56600-04F22-000	**122761420**	56500-04F22-000	**122771420**	
Dl650 V-Strom L1	650	2011	2011	B1111\B1211\B1112	56600-04F22-000	**122761420**	56500-04F22-000	**122771420**	
Gsf Bandit K5-K6	650	2005	2005	B5111\B5112\B5113	56600-38G00-000	**122762130**	56500-38G00-000	**122772130**	
Gsf Bandit K5-K6	650	2006	2006	B5111\B5112\B5113	56600-38G10-000	**122761440**	56500-38G10-000	**122771440**	
Gsf Bandit K7-K8	650	2007	2008	CJ122\CJ212\CJ111	56600-38G21-000	**122761980**	56500-38G21-000	**122771980**	
Gsf Bandit K9-L0	650	2009	2010	CZ123\CZ111	56600-44G10-000	**122761960**	56500-44G10-000	**122771960**	
Gsf Bandit L1	650	2011	2011	CZ123\CZ111	56600-44G10-000	**122761960**	56500-44G10-000	**122771960**	
Gsf Bandit L2	650	2012	2012	CZ123\CZ111	56600-44G10-000	**122761960**	56500-44G10-000	**122771960**	
Gsx F K8-L0	650	2008	2010	CJ135\CJ225\CJ136	56600-38G21-000	**122761980**	56500-38G21-000	**122771980**	
Gsx F L1	650	2011	2011	CJ135\CJ225\CJ136	56600-18H00-000	**122762640**	56500-18H00-000	**122772640**	
Gsx F L2	650	2012	2012	CJ135\CJ225\CJ136	56600-18H00-000	**122762640**	56500-18H00-000	**122772640**	
Sv650 K3-K7	650	2003	2007	BY111\BY132\BY113	56600-16G00-000	**122762160**	56500-16G10-000	**122772160**	
Sv650 K8-L0	650	2008	2010	BY111\BY132\BY113	56600-16G10-000	**122762160**	56500-16G10-000	**122772160**	
Sv650 X-K2	650	1999	2002	AV111\AV121\AV13	56600-19F00-000	**122761800**	56500-19F00-000	**122771800**	
Sv650Sl5	650	2015	2015	BY132	56600-16G10-000	**122762160**	56500-16G10-000	**122772160**	
Gsr750(A)L6	750	2016	2016	C5111\C5112	56600-08J01-000	**122761430**	56500-08J01-000	**122771430**	
Gsr750L1	750	2011	2011	C5111\C5211	56600-08J00-000	**122761430**	56500-08J00-000	**122771430**	
Gsr750L2	750	2012	2012	C5111\C5211	56600-08J00-000	**122761430**	56500-08J00-000	**122771430**	



Modello *Model*	**CC**	**Da** *From*	**A** *To*	**Telaio** *Frame*	**Specchio Sinistro OEM** *Left Mirror OEM*	**Specchio Sinistro Codice RMS** *Left Mirror RMS Code*	**Specchio Destro OEM** *Right Mirror OEM*	**Specchio Destro Codice RMS** *Right Mirror RMS Code*	**Note** *Notes*
Gsr750L3	750	2013	2013	C5111\C5211	56600-08J00-000	**122761430**	56500-08J00-000	**122771430**	
Gsr750Z(A)L4	750	2014	2014	C5111\C5112	56600-08J00-000	**122761430**	56500-08J00-000	**122771430**	
Gsr750Z(A)L5	750	2015	2015	C5111\C5112	56600-08J00-000	**122761430**	56500-08J00-000	**122771430**	
Gsx750 W-K1	750	1998	2001	AE111\AE121\AE211	56600-03F00-000	**122760890**	56500-03F00-000	**122770890**	
Gsx-R750 Y-K3	750	2000	2001	BD111\BD121\BD211	56600-24F00-000	**122762030**	56500-24F00-000	**122772030**	
Gsx-R750 Y-K3	750	2002	2003	BD111\BD121\BD211	56600-40F10-000	**122761990**	56500-40F10-000	**122771990**	
Dl1000 V-Strom K2-K6	1000	2002	2006	BS111\BS121	56600-04F20-000	**122761420**	56500-04F20-000	**122771420**	
Dl1000 V-Strom K7-L0	1000	2007	2010	BS111\BS121	56600-04F22-000	**122761420**	56500-04F22-000	**122771420**	
Gsx-R1000 K1-K2	1000	2001	2001	BL111	56600-24F00-000	**122762030**	56500-24F00-000	**122772030**	
Gsx-R1000 K1-K2	1000	2002	2002	BL111	56600-40F10-000	**122761990**	56500-40F10-000	**122771990**	
Gsx-R1000 K3-K4	1000	2003	2004	BZ111\BZ211	56600-16G00-000	**122762160**	56500-16G00-000	**122772160**	
Gsf Bandit K1-K5	1200	2001	2005	A9111\A9112	56600-03F00-000	**122760890**	56500-03F00-000	**122770890**	
Gsf Bandit K1-K5	1200	2001	2005	A9111\A9112	56600-31F00-000	**122761840**	56500-31F00-000	**122771840**	Modello GSF1200S | *GSF1200S Model*
Gsf Bandit K6	1200	2006	2006	CB111\CB114	56600-03F00-000	**122760890**	56500-03F90-000	**122770890**	Modello GSF1200A | *GSF1200A Model*
Gsf Bandit K6	1200	2006	2006	CB111\CB114	56600-38G20-000	**122761980**	56500-03F90-000	**122770890**	
Gsx X-K1	1200	1999	2001	A3111	56600-03F00-000	**122760890**	56500-03F00-000	**122770890**	
Gsf1250 Bandit K7-L0	1250	2007	2010	CH113\CH124	56600-38G21-000	**122761980**	56500-38G21-000	**122771980**	
Gsf1250S Bandit L1	1250	2011	2011	CH111\CH113	56600-38G21-000	**122761980**	56500-38G21-000	**122771980**	
Gsf1250S Bandit L2	1250	2012	2012	CH111\CH113	56600-38G21-000	**122761980**	56500-38G21-000	**122771980**	
Gsf1250Sa Bandit L5-L6	1250	2015	2016	CH113	56600-18H00-000	**122762640**	56500-18H00-000	**122772640**	
Gsx1250Fa L0	1250	2010	2010	CH135	56600-18H00-000	**122762640**	56500-18H00-000	**122772640**	
Gsx1250Fa L1	1250	2011	2011	CH135	56600-18H00-000	**122762640**	56500-18H00-000	**122772640**	
Gsx1250Fa L2	1250	2012	2012	CH135	56600-18H00-000	**122762640**	56500-18H00-000	**122772640**	
Gsx1250Fa L6	1250	2016	2016	CH135	56600-18H00-000	**122762640**	56500-18H00-000	**122772640**	
Gsx1300Bk B-King K8-L0	1300	2008	2010	CR111\CR211	56600-41F40-000	**122761450**	56500-41F40-000	**122771450**	
Gsx1300Ra Hayabusa L6	1300	2016	2016	CK111\CK211	56600-24F20-000	**122762030**	56500-24F20-000	**122772030**	
Gsx1300Ra Hayabusa L7	1300	2017	2017	CK111	56600-24F20-000	**122762030**	56500-24F20-000	**122772030**	
Gsx1300Raz Hayabusa L4	1300	2014	2014	CK1116\CK2116	56600-24F20-000	**122762030**	56500-24F20-000	**122772030**	
Gsz1300R Hayabusa K4-K7	1300	2004	2007	A1111\A1131\A1211	56600-24F00-000	**122762030**	56500-24F00-000	**122772030**	
Gsz1300R Hayabusa K8-L0	1300	2008	2010	CK111\CK211	56600-24F00-000	**122762030**	56500-24F00-000	**122772030**	
Gsz1300R Hayabusa L1	1300	2011	2011	CK111\CK211	56600-24F00-000	**122762030**	56500-24F00-000	**122772030**	
Gsz1300R Hayabusa L2	1300	2012	2012	CK111\CK211	56600-24F00-000	**122762030**	56500-24F00-000	**122772030**	
Gsz1300R Hayabusa X-K3	1300	1999	2003	A1111\A1131\A1211	56600-24F00-000	**122762030**	56500-24F00-000	**122772030**	
Gsz1300Ra Hayabusa L3	1300	2013	2013	CK1116\CK2116	56600-24F20-000	**122762030**	56500-24F20-000	**122772030**	
SYM									
Cinderella	50	1999	2002	HA05W-6	88120T40000	**122760540**	88110T40000	**122770540**	
Jet4	50	2009	2010	AD05W1-6	88120ANA000	**122761110**	88110ANA000	**122771110**	
Jet4 R 2T	50	2011	2014	JD05W1-6	88120ANA000	**122761110**	88110ANA000	**122771110**	
Super Fancy	50	1998	2000	G5H3-6	88120T40000	**122760540**	88110T40000	**122770540**	
Symphony	50	2009	2009	AY05W-T	88120APA000	**122761040**	88110APA000	**122771040**	
Symphony S	50	2010	2010	AY05W2-T	88120APA000	**122761040**	88110APA000	**122771040**	
Symphony S	50	2011	2011	AY05W4-T	88120APA000	**122761040**	88110APA000	**122771040**	
Symphony S	50	2012	2014	AY05W6-T	88120APA000	**122761040**	88110APA000	**122771040**	
Symphony Sr	50	2010	2010	AZ05W1-T	88120ANA000	**122761110**	88110ANA000	**122771110**	
Symphony Sr	50	2011	2011	AZ05W4-T	88120ANA000	**122761110**	88110ANA000	**122771110**	
Symphony Sr	50	2012	2014	AZ05W6-T	88120ANA000	**122761110**	88110ANA000	**122771110**	



Modello *Model*	**CC**	**Da** *From*	**A** *To*	**Telaio** *Frame*	**Specchio Sinistro OEM** *Left Mirror OEM*	**Specchio Sinistro Codice RMS** *Left Mirror RMS Code*	**Specchio Destro OEM** *Right Mirror OEM*	**Specchio Destro Codice RMS** *Right Mirror RMS Code*	**Note** *Notes*
Cinderella	100	1999	2001	HA10V2\HA10W	88120T40000	**122760540**	88110T40000	**122770540**	
Attila	125	1999	2000	H125D-6	88120T40000	**122760540**	88110T40000	**122770540**	
Hd Euro3	125	2007	2008	LH12W8-6	88120HHA000	**122762550**	88110HHA000	**122772550**	
Hd Evo	125	2005	2006	LH12W5-6	88120HHA000	**122762550**	88110HHA000	**122772550**	
Hd Evo Euro3	125	2007	2008	LH12WB-6	88120HHA000	**122762550**	88110HHA000	**122772550**	
Hd Evo Euro3	125	2010	2011	LH12WB-6	88120HHA000	**122762550**	88110HHA000	**122772550**	
Hd Evo Tamburo Euro3	125	2008	2009	LH12WA-6	88120HHA000	**122762550**	88110HHA000	**122772550**	
Hd2	125	2011	2011	LC12W1-6	88120LDA000	**122761710**	88110LDA000	**122771710**	
Hd2	125	2014	2014	LC12W1-6	88120LDA000	**122761710**	88110LDA000	**122771710**	
Jet4	125	2009	2010	AD12W1-6	88120ANA000	**122761110**	88110ANA000	**122771110**	
Joyride	125	2001	2002	LA12W1-6	88120H9D000	**122761730**	88110H9D000	**122771730**	
Joyride Eu2	125	2003	2004	LA12W4-6	88120H9D000	**122761730**	88110H9D000	**122771730**	
Joyride Euro2	125	2005	2006	LA12W7-6	88120H9A000	**122761740**	88110H9A000	**122771740**	
Joyride Euro3	125	2007	2007	LD12W-6	88120H9A000	**122761740**	88110H9A000	**122771740**	
Joyride Evo	125	2009	2010	LF12W-6	88120LVA000	**122761180**	88110LVA000	**122771180**	
Joyride Evo	125	2010	2010	LF12W1-T	88120LVA000	**122761180**	88110LVA000	**122771180**	
Joyride Evo	125	2013	2014	LF12W1-T	88120LVA000	**122761180**	88110LVA000	**122771180**	
New Duke	125	2000	2001	AA12W-6	88120T40000	**122760540**	88110T40000	**122770540**	
Super Duke	125	1999	2002	A125Q2-2	88120T40000	**122760540**	88110T40000	**122770540**	
Symphony	125	2009	2009	AY12W-T	88120APA000	**122761040**	88110APA000	**122771040**	
Symphony S	125	2009	2009	AY12W1-T	88120APA000	**122761040**	88110APA000	**122771040**	
Symphony S	125	2010	2010	AY12W4-T	88120APA000	**122761040**	88110APA000	**122771040**	
Symphony S	125	2012	2014	AY12W7-T	88120APA000	**122761040**	88110APA000	**122771040**	
Symphony S Euro4	125	2016	2016	AY12W8-EU	88120APA000	**122761040**	88110APA000	**122771040**	
Symphony Sr	125	2010	2010	AZ12W1-T	88120ANA000	**122761110**	88110ANA000	**122771110**	
Symphony Sr	125	2012	2014	AZ12W3-T	88120ANA000	**122761110**	88110ANA000	**122771110**	
Attila	150	2000	2001	HD15V-6	88120T40000	**122760540**	88110T40000	**122770540**	
Joyride	150	2001	2002	LA15W1-6	88120H9D000	**122761730**	88110H9D000	**122771730**	
Symphony S	150	2009	2009	AY15W1-T	88120APA000	**122761040**	88110APA000	**122771040**	
Symphony S	150	2010	2010	AY15W3-T	88120APA000	**122761040**	88110APA000	**122771040**	
Symphony S	150	2012	2014	AY15W6-T	88120APA000	**122761040**	88110APA000	**122771040**	
Symphony Sr	150	2010	2010	AZ15W1-T	88120ANA000	**122761110**	88110ANA000	**122771110**	
Symphony Sr	150	2012	2014	AZ15W6-T	88120ANA000	**122761110**	88110ANA000	**122771110**	
Hd Euro3 I	200	2007	2007	LH18W8-6	88120HHA000	**122762550**	88110HHA000	**122772550**	
Hd Evo Euro3 I	200	2007	2007	LH18W7-6	88120HHA000	**122762550**	88110HHA000	**122772550**	
Hd Evo I Euro3	200	2010	2012	LH18W7-6	88120HHA000	**122762550**	88110HHA000	**122772550**	
Hd Evo I Tamburo Euro3	200	2008	2009	LH182WA-6	88120HHA000	**122762550**	88110HHA000	**122772550**	
Hd2 I	200	2011	2011	LC18W1-6	88120LDA000	**122761710**	88110LDA000	**122771710**	
Hd2 I	200	2014	2014	LC18W1-6	88120LDA000	**122761710**	88110LDA000	**122771710**	
Joyride	200	2003	2003	LA18W1-6	88120H9A910	**122761770**	88110H9A910	**122771770**	
Joyride Eu2	200	2003	2004	LA18W4-6	88120H9A910	**122761770**	88110H9A910	**122771770**	
Joyride Euro2	200	2005	2006	LA18W9-6	88120H9A000	**122761740**	88110H9A000	**122771740**	
Joyride Evo I	200	2009	2009	LF18W-6	88120LVA000	**122761180**	88110LVA000	**122771180**	
Joyride Evo I	200	2013	2014	LF18W1-T	88120LVA000	**122761180**	88110LVA000	**122771180**	
Joyride I Euro3	200	2007	2009	LD18W-6	88120H9A000	**122761740**	88110H9A000	**122771740**	
Joyride I Evo	200	2010	2010	LF18W1-T	88120LVA000	**122761180**	88110LVA000	**122771180**	
TRIUMPH									
Speed Four 600	600	2002	2005	2	T2300537-P	**122771470**	T2300537-P	**122771470**	
Daytona 675	675	2009	2012	SMTTMD1066	2066706	**122761830**	2066706	**122771830**	
Daytona 675	675	2013	2013	SMTTTA10FA	2066706	**122761830**	2066706	**122771830**	
Daytona 675 Abs	675	2013	2017	SMTTTA12FA	2066706	**122761830**	2066706	**122771830**	
Daytona 675 R	675	2011	2012	SMTTMD1166	2066706	**122761830**	2066706	**122771830**	
Daytona 675 R Abs	675	2013	2017	SMTTTA14FA	2066706	**122761830**	2066706	**122771830**	
Street Triple 675	675	2013	2013	SMTTTL1066	T2066710	**122761460**	T2066711	**122771460**	
Street Triple 675	675	2013	2013	SMTTTL4066	T2066710	**122761460**	T2066711	**122771460**	
Street Triple 675 Abs	675	2013	2015	SMTTTL1166	T2066710	**122761460**	T2066711	**122771460**	



SPECCHIETTI RETROVISORI

REAR VIEW MIRRORS

Modello *Model*	**CC**	**Da** *From*	**A** *To*	**Telaio** *Frame*	**Specchio Sinistro OEM** *Left Mirror OEM*	**Specchio Sinistro Codice RMS** *Left Mirror RMS Code*	**Specchio Destro OEM** *Right Mirror OEM*	**Specchio Destro Codice RMS** *Right Mirror RMS Code*	**Note** *Notes*
Street Triple 675 Abs	675	2013	2015	SMTTTL4166	T2066710	**122761460**	T2066711	**122771460**	
Street Triple 675 R	675	2013	2013	SMTTTL1266	T2066710	**122761460**	T2066711	**122771460**	
Street Triple 675 R Abs	675	2013	2016	SMTTTL1366	T2066710	**122761460**	T2066711	**122771460**	
Speedmaster 800	800	2003	2004	2	2060061	**122761860**	2060060	**122771860**	
Speedmaster 865	865	2005	2007	3	2060061	**122761860**	2060060	**122771860**	
Speedmaster 865	865	2007	2007	SMTTJ9161R	2060061	**122761860**	2060060	**122771860**	
Speedmaster 865 Efi	865	2008	2015	SMTTJ9168R	2060061	**122761860**	2060060	**122771860**	
Speedmaster 865 Efi	865	2015	2017	SMTTJ9168R	2060061	**122761860**	2060060	**122771860**	
Tiger 900	900	1993	1996	430	T2300537-P	**122771470**	T2300537-P	**122771470**	
Tiger 900	900	1996	1998	431	T2300537-P	**122771470**	T2300537-P	**122771470**	
Tiger 900 Efi	900	1999	2001	711	T2300537-P	**122771470**	T2300537-P	**122771470**	
Speed Triple 955 Efi	955	1999	2001	509	T2300537-P	**122771470**	T2300537-P	**122771470**	
Speed Triple 955 Efi	955	2002	2004	566	T2300537-P	**122771470**	T2300537-P	**122771470**	
Tiger 955 I Cast Wheel	955	2005	2006	730	T2300537-P	**122771470**	T2300537-P	**122771470**	
Tiger 955 I Spoked Wheel	955	2001	2004	730	T2300537-P	**122771470**	T2300537-P	**122771470**	
Thunderbird 1700 Commander Abs	1700	2014	2016	SMTTNB15C7	2060061	**122761860**	2060060	**122771860**	
Thunderbird 1700 Commander Abs	1700	2017	2018	-	2060061	**122761860**	2060060	**122771860**	
Thunderbird 1700 Lt Abs	1700	2014	2016	SMTTNB17C7	2060061	**122761860**	2060060	**122771860**	
Thunderbird 1700 Lt Abs	1700	2017	2017	1	2060061	**122761860**	2060060	**122771860**	
Thunderbird 1700 Lt Abs	1700	2018	2018	-	2060061	**122761860**	2060060	**122771860**	
Thunderbird 1700 Nightstorm Abs	1700	2015	2016	SMTTNB13C7	2060061	**122761860**	2060060	**122771860**	
Thunderbird 1700 Storm	1700	2011	2013	SMTTNB12C7	2060061	**122761860**	2060060	**122771860**	
Thunderbird 1700 Storm Abs	1700	2011	2014	SMTTNB13C7	2060061	**122761860**	2060060	**122771860**	
Thunderbird 1700 Storm Abs	1700	2015	2016	-	2060061	**122761860**	2060060	**122771860**	
Thunderbird 1700 Storm Abs	1700	2017	2017	1	2060061	**122761860**	2060060	**122771860**	
Thunderbird 1700 Storm Abs	1700	2018	2018	-	2060061	**122761860**	2060060	**122771860**	
Rocket 2300 III	2300	2004	2007	1	2060061	**122761860**	2060060	**122771860**	
Rocket 2300 III	2300	2008	2009	SMTTLC1035	2060061	**122761860**	2060060	**122771860**	
Rocket 2300 III Classic	2300	2006	2006	1	2060061	**122761860**	2060060	**122771860**	
Rocket 2300 III Classic	2300	2007	2009	SMTTLC6035	2060061	**122761860**	2060060	**122771860**	
Rocket 2300 III Roadster Abs	2300	2010	2018	SMTTLC1235	2060061	**122761860**	2060060	**122771860**	
Rocket 2300 III Touring	2300	2008	2010	SMTTLC4035	2060061	**122761860**	2060060	**122771860**	
Rocket 2300 III Touring Abs	2300	2011	2017	SMTTLC4235	2060061	**122761860**	2060060	**122771860**	
Rocket 2300 III X Roadster Abs	2300	2015	2016	SMTTLC1235	2060061	**122761860**	2060060	**122771860**	
YAMAHA									
Bw'S	50	2004	2016	SA231	4SBF62800000	**122760800**	4SBF62900000	**122770800**	
Bw'S Bump	50	1997	1998	4SB	4SBF62800000	**122760800**	4SBF62900000	**122770800**	
Bw'S Easy	50	2013	2013	SA236	4SBF62800000	**122760800**	4SBF62900000	**122770800**	
Bw'S Naked	50	2003	2003	SA064	4SBF62800000	**122760800**	-	-	
Bw'S Naked	50	2004	2004	SA231	4SBF62800000	**122760800**	-	-	
Bw'S Naked	50	2009	2016	SA231	4SBF62800000	**122760800**	-	-	
Bw'S Next Generation	50	1997	1998	4SB	4SBF62800000	**122760800**	4SBF62900000	**122770800**	



Modello *Model*	**CC**	**Da** *From*	**A** *To*	**Telaio** *Frame*	**Specchio Sinistro OEM** *Left Mirror OEM*	**Specchio Sinistro Codice RMS** *Left Mirror RMS Code*	**Specchio Destro OEM** *Right Mirror OEM*	**Specchio Destro Codice RMS** *Right Mirror RMS Code*	**Note** *Notes*
Bw'S Next Generation	50	1999	2003	SA051	4SBF62800000	**122760800**	4SBF62900000	**122770800**	
Bw'S Next Generation	50	2004	2006	SA056	4SBF62800000	**122760800**	4SBF62900000	**122770800**	
Bw'S Original	50	1997	1998	3WW\4VV	4SBF62800000	**122760800**	-	**-**	
Bw'S Original	50	1999	1999	SA061	4SBF62800000	**122760800**	-	**-**	
Bw'S Original	50	1999	2000	SA061	5BRF62801000	**122760050**	5BRF62901000	**122770050**	
Bw'S Original	50	1999	2002	SA061	4SBF62800000	**122760800**	-	**-**	
Bw'S Original Euro2	50	2003	2003	SA064	4SBF62800000	**122760800**	-	**-**	
Bw'S R	50	2001	2001	SA061	4SBF62800000	**122760800**	4SBF62900000	**122770800**	
Cw Bw'S Original Euro2	50	2002	2002	SA064	4SBF62800000	**122760800**	-	**-**	
Cw L Bw'S	50	2004	2004	SA231	4SBF62800000	**122760800**	4SBF62900000	**122770800**	
Cw Rs Spy	50	1995	1998	4UP1\4UP2\4UP4	-	**-**	4SBF62900000	**122770800**	
Cw Sp Bw'S Original Euro2	50	2002	2002	SA064	-	**-**	4SBF62900000	**122770800**	
Dt R - Dt Rsm	50	2003	2005	70K10\70K1A	1D4F62800000	**122762650**	-	**-**	
Dt R - Dt X	50	2006	2006	70K10\70K1A	1D4F62800000	**122762650**	1D4F62900000	**122772650**	
Dt R - Dt X	50	2007	2011	70K10\70K1A	1D4F62800000	**122762650**	-	**-**	
Ew Slider	50	2000	2002	SA091	4SBF62800000	**122760800**	-	**-**	
Ns50 Aerox	50	2013	2016	SA421	-	**-**	4SBF62900000	**122770800**	
Ns50F Aerox F	50	2014	2016	SA426	-	**-**	4SBF62900000	**122770800**	
Ns50N Aerox Naked	50	2013	2016	SA424	-	**-**	4SBF62900000	**122770800**	
Yn F Neo'S 4	50	2009	2010	SA401	5C2F62800000	**122760880**	5C2F62900000	**122770880**	
Yn F Neo'S 4	50	2011	2012	SA404	5C2F62800000	**122760880**	5C2F62900000	**122770880**	
Yn F Neo'S 4	50	2012	2015	SA461	5C2F62800000	**122760880**	5C2F62900000	**122770880**	
Yn Neo'S	50	2007	2012	SA341	5C2F62800000	**122760880**	5C2F62900000	**122770880**	
Yn R Neo'S	50	1997	2001	5AD\SA151	5ADF62801000	**122760580**	5ADF62901000	**122770580**	
Yq Aerox	50	2001	2002	SA141	5BRF62801000	**122760050**	5BRF62901000	**122770050**	
Yq Aerox	50	2004	2008	SA144	5BRF62801000	**122760050**	5BRF62901000	**122770050**	
Yq Aerox	50	2009	2012	SA144	-	**-**	4SBF62900000	**122770800**	
Yq Aerox R	50	1999	2000	5BR00	5BRF62801000	**122760050**	5BRF62901000	**122770050**	
Yq L Aerox Euro2	50	2003	2003	SA144	5BRF62801000	**122760050**	5BRF62901000	**122770050**	
Yn Neo'S	100	1999	2002	SB041	5ADF62800000	**122760580**	5ADF62900000	**122770580**	
Yq Aerox	100	2000	2002	SB051	5BRF62801000	**122760050**	5BRF62901000	**122770050**	
Xc115S D'Elight	115	2014	2014	SE711	54SF62900000	**122762680**	54SF62900000	**122772680**	
Dt125Re	125	2004	2006	DE061	1D0F62800000	**122760570**	1D0F62900000	**122770570**	
Dt125X	125	2005	2006	DE062	1D0F62800000	**122760570**	1D0F62900000	**122770570**	
Hw Xenter	125	2012	2016	SE591	52SF62800000	**122761080**	52SF62900000	**122771080**	
Mt125	125	2015	2016	RE114	5D7F62801000	**122762810**	5D7F62901000	**122772820**	
Mt125A	125	2015	2016	RE115	5D7F62801000	**122762810**	5D7F62901000	**122772820**	
Mt125A	125	2017	2019	RE292	5D7F62801000	**122762810**	5D7F62901000	**122772820**	
Vp X-City	125	2008	2011	SE431	5B2F62800100	**122761620**	5B2F62900100	**122771620**	
Xc Cygnus R	125	1999	1999	4NB00\4NB10\4LA10	4NB262800000	**122760850**	4NB262900000	**122770850**	
Xc K Cygnus R	125	1997	1998	4TH	4NB262800000	**122760850**	4NB262900000	**122770850**	
Xc T Cygnus	125	1995	1998	4KY\4LA\4NB	4NB262800000	**122760850**	4NB262900000	**122770850**	
Xc125R Majesty S	125	2014	2014	SE811	1DKF62801000	**122762710**	1DKF62901000	**122772710**	
Xt125R	125	2005	2006	7401A	1D4F62800000	**122762650**	1D4F62900000	**122772650**	
Xt125R	125	2007	2007	7401E	1D4F62800000	**122762650**	1D4F62900000	**122772650**	
Xt125R	125	2007	2008	7401G	1D4F62800000	**122762650**	1D4F62900000	**122772650**	
Xt125X	125	2005	2006	7401B	1D4F62800000	**122762650**	1D4F62900000	**122772650**	
Xt125X	125	2007	2007	13D4	1D4F62800000	**122762650**	1D4F62900000	**122772650**	
Xt125X	125	2007	2007	7401F	1D4F62800000	**122762650**	1D4F62900000	**122772650**	
Xt125X	125	2008	2008	7401H	1D4F62800000	**122762650**	1D4F62900000	**122772650**	
Ybr	125	2005	2005	RE031	5VKF62800000	**122761480**	5VKF62900000	**122771480**	
Yp125R X-Max	125	2006	2007	SE321	1B9F62801000	**122760860**	1B9F62901000	**122770860**	
Yp125R X-Max	125	2006	2009	SE321	1B9F62802000	**122760210**	1B9F62902000	**122770210**	
Yp125R X-Max	125	2010	2012	SE541	37PF62800000	**122761760**	37PF62900000	**122771760**	



SPECCHIETTI RETROVISORI

REAR VIEW MIRRORS

Modello *Model*	**CC**	**Da** *From*	**A** *To*	**Telaio** *Frame*	**Specchio Sinistro OEM** *Left Mirror OEM*	**Specchio Sinistro Codice RMS** *Left Mirror RMS Code*	**Specchio Destro OEM** *Right Mirror OEM*	**Specchio Destro Codice RMS** *Right Mirror RMS Code*	**Note** *Notes*
Yp125R X-Max	125	2012	2013	SG252	37PF62800000	**122761760**	37PF62900000	**122771760**	
Yp125R X-Max	125	2014	2014	SE681	37PF62800000	**122761760**	37PF62900000	**122771760**	
Yp125R X-Max	125	2015	2016	SE681\SE686	37PF62800100	**122761760**	37PF62900100	**122771760**	
Yp125R X-Max Abs	125	2011	2011	SE544	37PF62800000	**122761760**	37PF62900000	**122771760**	
Yp125Ra X-Max Abs	125	2013	2013	SE644	37PF62800000	**122761760**	37PF62900000	**122771760**	
Yp125Ra X-Max Abs	125	2014	2015	SE684	37PF62800000	**122761760**	37PF62900000	**122771760**	
Yp125Ra X-Max Abs	125	2016	2016	SE684	37PF62800100	**122761760**	37PF62900100	**122771760**	
Yp125Ra X-Max Abs	125	2017	2017	-	37PF62800100	**122761760**	37PF62900100	**122771760**	
Yp125Ra X-Max Abs	125	2018	2018	SEE61	B74F62800000	**122762800**	B74F2629000	**122772810**	
Yp125Ra X-Max Abs	125	2019	2019	SEE61	B74F62800000	**122762800**	B74F2629000	**122772810**	
Yp125Ra X-Max Abs Iron Max	125	2019	2019	SEE64	B74F62800000	**122762800**	B74F2629000	**122772810**	
Yzf-R125	125	2008	2016	RE061	5D7F62800100	**122762010**	5D7F62900100	**122772010**	
Yzf-R125A	125	2015	2016	RE112	5D7F62800100	**122762010**	5D7F62900100	**122772010**	
Yzf-R125A	125	2017	2017	-	5D7F62800200	**122762010**	5D7F62900200	**122772010**	
Hw Xenter	150	2012	2016	SG231	52SF62800000	**122761080**	52SF62900000	**122771080**	
Vp X-City	250	2007	2008	SG191	5B2F62800000	**122761620**	5B2F62900000	**122771620**	
Vp X-City	250	2009	2012	SG192\SG194	5B2F62800100	**122761620**	5B2F62900100	**122771620**	
Vp X-City	250	2013	2015	SG194	5B2F62800100	**122761620**	5B2F62900100	**122771620**	
Xg Tricker	250	2005	2005	DG141	1D0F62800000	**122760570**	1D0F62900000	**122770570**	
Yp250 Majesty	250	1996	1998	4UC	3TB262800100	**122760600**	-	-	
Yp250 Majesty	250	2000	2001	SG041	5CG262801000	**122760560**	5CG262901000	**122770560**	
Yp250 Majesty	250	2002	2003	SG048	5CG262800100	**122760560**	5CG262900100	**122770560**	
Yp250 Majesty Abs	250	2003	2003	SG04B	5CG262800100	**122760560**	5CG262900100	**122770560**	
Yp250 Majesty Dx	250	1998	1999	SG021\SG022	5CG262800100	**122760560**	5CG262900100	**122770560**	
Yp250R Black X-Max	250	2009	2009	SG162	1B9F62802000	**122760210**	1B9F62902000	**122770210**	
Yp250R X-Max	250	2005	2006	SG161	1B9F62801000	**122760860**	1B9F62901000	**122770860**	
Yp250R X-Max	250	2007	2009	SG162	1B9F62802000	**122760210**	1B9F62902000	**122770210**	
Yp250R X-Max	250	2010	2012	SG221	37PF62800000	**122761760**	37PF62900000	**122771760**	
Yp250R X-Max	250	2012	2013	SG251	37PF62800000	**122761760**	37PF62900000	**122771760**	
Yp250R X-Max	250	2014	2016	SG261	37PF62800100	**122761760**	37PF62900100	**122771760**	
Yp250R X-Max Sport	250	2011	2012	SG224	37PF62800000	**122761760**	37PF62900000	**122771760**	
Yp250Ra X-Max Abs	250	2011	2012	SG222	37PF62800000	**122761760**	37PF62900000	**122771760**	
Yp250Ra X-Max Abs	250	2012	2013	SG252	37PF62800000	**122761760**	37PF62900000	**122771760**	
Yp250Ra X-Max Abs	250	2014	2015	SG262	37PF62800000	**122761760**	37PF62900000	**122771760**	
Yp250Ra X-Max Abs	250	2016	2016	SG262\SG266	37PF62800100	**122761760**	37PF62900100	**122771760**	
Czd300-A X-Max	300	2017	2017	SH081	B74F62800000	**122762800**	B74F2629000	**122772810**	
Czd300-A X-Max	300	2018	2018	SH131	B74F62800000	**122762800**	B74F2629000	**122772810**	
Czd300-A X-Max Abs	300	2019	2019	SH131	B74F62800000	**122762800**	B74F2629000	**122772810**	
Czd300-A X-Max Abs Iron Max	300	2019	2019	SH134	B74F62800000	**122762800**	B74F2629000	**122772810**	
Xc Versity	300	2003	2003	SH011	5SEF62800000	**122761640**	5SEF62900000	**122771640**	
Xc Versity	300	2004	2006	SH014	5SEF62800000	**122761640**	5SEF62900000	**122771640**	
Mt-03A	320	2016	2016	RH07K	1RC262900000	**122761750**	1RC262800000	**122771750**	
Yzf-R3A	320	2015	2016	RH071	1WDF62801000	**122762560**	1WDF62901000	**122772560**	
Yp400 Majesty	400	2004	2005	SH021\4\SH025\6	5CG262801000	**122760560**	5CG262901000	**122770560**	
Yp400 Majesty	400	2006	2006	SH025\SH026	5CG262801000	**122760560**	5CG262901000	**122770560**	
Yp400 Majesty	400	2007	2008	SH051\SH052	5CG262801000	**122760560**	5CG262901000	**122770560**	
Yp400 Majesty	400	2009	2011	SH055\SH056\SH057	5CG262801000	**122760560**	5CG262901000	**122770560**	
Yp400 Majesty Abs	400	2007	2008	SH054	5CG262801000	**122760560**	5CG262901000	**122770560**	
Yp400 Majesty Abs	400	2009	2011	SH056\SH059	5CG262801000	**122760560**	5CG262901000	**122770560**	
Yp400R X-Max	400	2013	2014	SH071	37PF62800000	**122761760**	37PF62900000	**122771760**	
Yp400R X-Max	400	2015	2016	SH071	37PF62800100	**122761760**	37PF62900100	**122771760**	
Yp400R X-Max Momodesign	400	2014	2014	SH071	37PF62800000	**122761760**	37PF62900000	**122771760**	
Yp400Ra X-Max	400	2018	2019	SH121	B74F62800000	**122762800**	B74F2629000	**122772810**	
Yp400Ra X-Max Abs	400	2014	2014	SH072	37PF62800000	**122761760**	37PF62900000	**122771760**	
Yp400Ra X-Max Abs	400	2015	2017	SH072	37PF62800100	**122761760**	37PF62900100	**122771760**	



Modello *Model*	**CC**	**Da** *From*	**A** *To*	**Telaio** *Frame*	**Specchio Sinistro OEM** *Left Mirror OEM*	**Specchio Sinistro Codice RMS** *Left Mirror RMS Code*	**Specchio Destro OEM** *Right Mirror OEM*	**Specchio Destro Codice RMS** *Right Mirror RMS Code*	**Note** *Notes*
Yp400Ra X-Max Abs Iron Max	400	2019	2019	SH124	B74F62800000	**122762800**	B74F2629000	**122772810**	
Yp400Ra X-Max Ironmax Abs	400	2016	2016	SH072	37PF62800100	**122761760**	37PF62900100	**122771760**	
Yp400Ra X-Max Momodesign Abs	400	2014	2014	SH076	37PF62800000	**122761760**	37PF62900000	**122771760**	
Xp T-Max	500	2001	2003	SJ011\4\5\6	5GJ262801000	**122760550**	5GJ262901000	**122770550**	
Xp T-Max	500	2004	2006	SJ031\SJ032	5GJ262801000	**122760550**	5GJ262901000	**122770550**	
Xp T-Max	500	2008	2011	SJ061\SJ062	4B5262800000	**122760900**	4B5262900000	**122770900**	
Xp T-Max Abs	500	2005	2006	SJ034	5GJ262801000	**122760550**	5GJ262901000	**122770550**	
Xp T-Max Abs	500	2008	2011	SJ064	4B5262801900	**122760900**	4B5262901900	**122770900**	
Xp T-Max Black Max	500	2006	2006	SJ031	5GJ262801000	**122760550**	5GJ262901000	**122770550**	
Xp T-Max	530	2012	2014	SJ091	59C262800000	**122761090**	59C262900000	**122771090**	
Xp T-Max	530	2015	2016	SJ098	2PW262800000	**122762700**	2PW262900000	**122772700**	
Xp T-Max Abs	530	2012	2014	SJ092	59C262800000	**122761090**	59C262900000	**122771090**	
Xp T-Max Abs	530	2015	2016	SJ099	2PW262800000	**122762700**	2PW262900000	**122772700**	
Xp T-Max Sp	530	2015	2015	SJ098	2PW262800000	**122762700**	2PW262900000	**122772700**	
Xp T-Max Sp Abs	530	2015	2016	SJ099	2PW262800000	**122762700**	2PW262900000	**122772700**	
Fz6	600	2004	2006	-	1B3262801000	**122761530**	1B3262901000	**122771530**	
Fz6	600	2007	2007	RJ145	1B3262801000	**122761530**	1B3262901000	**122771530**	
Fz6 Fazer S2	600	2007	2007	RJ142	4S8262800000	**122761950**	4S8262900000	**122771950**	
Fz6 Fazer S2	600	2008	2008	RJ142\RJ144	4S8262800000	**122761950**	4S8262900000	**122771950**	
Fz6 Fazer S2 Abs	600	2008	2008	RJ149	4S8262800000	**122761950**	4S8262900000	**122771950**	
Fz6 Ns	600	2006	2006	RJ074\RJ075	1B3262801000	**122761530**	1B3262901000	**122771530**	
Fz6 S2	600	2007	2008	RJ146\RJ147	1B3262801000	**122761530**	1B3262901000	**122771530**	
Fzs Fazer	600	2002	2003	RJ025	5LV262800000	**122762110**	5LV262900000	**122772110**	
Xj N	600	1995	1997	4KE\4BR	4BR262800000	**122762230**	4BR262900000	**122772230**	
Xj N	600	1999	2001	4KE	4BR262800000	**122762230**	4BR262900000	**122772230**	
Xj S Diversion	600	1992	1992	4BR1	4BR262800000	**122762230**	4BR262900000	**122772230**	
Xj S Diversion	600	1993	1993	4BR3	4BR262800000	**122762230**	4BR262900000	**122772230**	
Xj S Diversion	600	1994	1994	4BR6	4BR262800000	**122762230**	4BR262900000	**122772230**	
Xj S Diversion	600	1995	1995	4BR8	4BR262800000	**122762230**	4BR262900000	**122772230**	
Xj S Diversion	600	1996	1996	4BRA	4BR262800000	**122762230**	4BR262900000	**122772230**	
Xj S Diversion	600	1997	2002	4BR	4BR262800000	**122762230**	4BR262900000	**122772230**	
Xj6-F Diversion	600	2010	2011	RJ198	36P262800000	**122761890**	36P262900000	**122771890**	
Xj6-Fa Diversion Abs	600	2010	2011	RJ19M	36P262800000	**122761890**	36P262900000	**122771890**	
Xj6-N	600	2009	2011	RJ195	20S262800000	**122761360**	20S262900000	**122771360**	
Xj6-N	600	2013	2013	RJ195	20S262800000	**122761360**	20S262900000	**122771360**	
Xj6-N Sp	600	2013	2013	RJ221	20S262800000	**122761360**	20S262900000	**122771360**	
Xj6-Na Abs	600	2013	2015	RJ224	20S262800000	**122761360**	20S262900000	**122771360**	
Xt E	600	1993	1993	3TB7\3UX4\3RW4	3TB262800100	**122760600**	-	-	
Xt E	600	1994	1994	3TB9\3UX5	3TB262800100	**122760600**	-	-	
Xt E	600	1995	2002	4SL\4PT	3TB262800100	**122760600**	-	-	
Xt K	600	1993	1993	3YP5	3TB262800000	**122760600**	-	-	
Mt-03	660	2006	2006	RM021\RM022	5VKF62800000	**122761480**	5VKF62900000	**122771480**	
Mt-03	660	2007	2007	RM024\RM025	5VKF62800000	**122761480**	5VKF62900000	**122771480**	
Mt-03	660	2008	2010	RM024	5VKF62800000	**122761480**	5VKF62900000	**122771480**	
Mt-03	660	2011	2012	RM027\RM051	5VKF62800000	**122761480**	5VKF62900000	**122771480**	
Xt660R	660	2004	2005	DM011	5VKF62800000	**122761480**	5VKF62900000	**122771480**	
Xt660R	660	2006	2006	DM011\DM016	5VKF62800000	**122761480**	5VKF62900000	**122771480**	
Xt660R	660	2007	2011	DM018	5VKF62800000	**122761480**	5VKF62900000	**122771480**	
Xt660R	660	2014	2014	DM018	5VKF62800000	**122761480**	5VKF62900000	**122771480**	
Xt660X	660	2004	2004	DM014	5VKF62800000	**122761480**	5VKF62900000	**122771480**	
Xt660X	660	2005	2005	DM014	1D2F62800000	**122761490**	1D2F62900000	**122771490**	
Xt660X	660	2006	2006	DM014\DM017	1D2F62800000	**122761490**	1D2F62900000	**122771490**	
Xt660X	660	2007	2011	DM01B	1D2F62800000	**122761490**	1D2F62900000	**122771490**	
Xt660X	660	2014	2014	DM01B	1D2F62800000	**122761490**	1D2F62900000	**122771490**	
Xt660Z Tenere	660	1991	1996	3YF\4BW	3TB262800100	**122760600**	-	-	



SPECCHIETTI RETROVISORI

REAR VIEW MIRRORS

Modello *Model*	**CC**	**Da** *From*	**A** *To*	**Telaio** *Frame*	**Specchio Sinistro OEM** *Left Mirror OEM*	**Specchio Sinistro Codice RMS** *Left Mirror RMS Code*	**Specchio Destro OEM** *Right Mirror OEM*	**Specchio Destro Codice RMS** *Right Mirror RMS Code*	**Note** *Notes*
Xt660Z Tenere	660	2008	2009	DM021	5VKF62800000	**122761480**	5VKF62900000	**122771480**	
Xt660Z Tenere	660	2010	2012	DM025	5VKF62800000	**122761480**	5VKF62900000	**122771480**	
Xt660Z Tenere	660	2013	2015	DM041	5VKF62800000	**122761480**	5VKF62900000	**122771480**	
Xt660Za Tenere	660	2011	2011	DM024	5VKF62800000	**122761480**	5VKF62900000	**122771480**	
Mt-07	700	2014	2016	RM041	1RC262900000	**122761750**	1RC262800000	**122771750**	
Mt-07 Mc Moto Cage	700	2014	2014	RM041	1RC262900000	**122761750**	1RC262800000	**122771750**	
Mt-07A	700	2017	2017	-	1RC262900000	**122761750**	1RC262800000	**122771750**	
Mt-07A Abs	700	2014	2016	RM042	1RC262900000	**122761750**	1RC262800000	**122771750**	
Mt-07A Mc Moto Cage	700	2014	2014	RM042	1RC262900000	**122761750**	1RC262800000	**122771750**	
Mtt690-A Tracer	700	2016	2016	RM141\RM151	5D7F62801000	**122762810**	5D7F62901000	**122772820**	
Mtt690-A Tracer	700	2018	2018	RM142	5D7F62801000	**122762810**	5D7F62901000	**122772820**	
Mtt690-A Tracer	700	2018	2018	RM152	5D7F62801000	**122762810**	5D7F62901000	**122772820**	
Xsr700	700	2016	2017	RM111	B34F62800000	**122762770**	B34F62900000	**122772770**	
Fz8-N	800	2011	2012	RN255	20S262800000	**122761360**	20S262900000	**122771360**	
Fz8-Na	800	2011	2012	RN256	20S262800000	**122761360**	20S262900000	**122771360**	
Fz8-S	800	2011	2011	RN251	42P262800000	**122762060**	42P262900000	**122772060**	
Fz8-S	800	2015	2015	RN251	42P262800000	**122762060**	42P262900000	**122772060**	
Fz8-Sa	800	2011	2015	RN252	42P262800000	**122762060**	42P262900000	**122772060**	
Mt-09	850	2014	2015	RN291	1RC262900000	**122761750**	1RC262800000	**122771750**	
Mt-09 (Mtn850-A)	850	2017	2017	-	1RC262900000	**122761750**	1RC262800000	**122771750**	
Mt-09A Abs	850	2014	2016	RN296	1RC262900000	**122761750**	1RC262800000	**122771750**	
Tdm	850	1991	1991	3VD1	4TX262800000	**122762100**	3VD262900100	**122772100**	
Tdm	850	1992	1992	3VD4	4TX262800000	**122762100**	3VD262900100	**122772100**	
Tdm	850	1993	1993	3VD5	4TX262800000	**122762100**	3VD262900100	**122772100**	
Tdm	850	1994	1995	3VD	4TX262800000	**122762100**	3VD262900100	**122772100**	
Tdm	850	1996	1998	4TX	4TX262800000	**122762100**	3VD262900100	**122772100**	
Tdm	850	1999	1999	4TX	4TX262804200	**122761220**	4TX262904200	**122771220**	
Tdm	850	2000	2001	4TX00	4TX262805000	**122761220**	4TX262905000	**122771220**	
Tdm	900	2002	2005	RN081	4TX262804200	**122761220**	4TX262904200	**122771220**	
Tdm	900	2006	2006	RN111	4TX262805000	**122761220**	4TX262905000	**122771220**	
Tdm	900	2007	2010	RN181	4TX262805000	**122761220**	4TX262905000	**122771220**	
Tdm Abs	900	2005	2005	RN114	4TX262804200	**122761220**	4TX262904200	**122771220**	
Tdm Abs	900	2006	2010	RN114	4TX262805000	**122761220**	4TX262905000	**122771220**	
Fz1	1000	2006	2006	RN165\RN166\RN167	2D1262800000	**122761260**	2D1262900000	**122771260**	
Fz1	1000	2007	2007	RN165\RN166\RN167	2D1262800100	**122761260**	2D1262900100	**122771260**	
Fz1	1000	2008	2008	RN165\RN166\RN167	5YU262802000	**122761240**	5YU262902000	**122771240**	
Fz1	1000	2009	2009	RN165\RN166\RN167	5YU262802100	**122761240**	5YU262902100	**122771240**	
Fz1 Fazer	1000	2006	2006	RN161\RN162\RN163	3C3262800000	**122762070**	3C3262900000	**122772070**	
Fz1 Fazer	1000	2007	2010	RN161\RN162\RN164	3C3262800000	**122762070**	3C3262900000	**122772070**	
Fz1 Fazer Abs	1000	2007	2008	RN168\RN169	3C3262800000	**122762070**	3C3262900000	**122772070**	
Fzs Fazer	1000	2001	2003	RN061\RN066	5LV262800000	**122762110**	5LV262900000	**122772110**	
Fzs Fazer	1000	2004	2005	RN066\RN141	5LV262800000	**122762110**	5LV262900000	**122772110**	
Yzf-R1	1000	2004	2005	RN121\RN124	5VY262800000	**122762000**	5VY262900000	**122772000**	
Yzf-R1	1000	2006	2006	RN126\RN127	5VY262800000	**122762000**	5VY262900000	**122772000**	
Yzf-R1Sp	1000	2006	2006	RN129	5VY262800000	**122762000**	5VY262900000	**122772000**	
Xt1200Z Super Tenere	1200	2014	2015	DP041	2BS262800000	**122762570**	2BS262900000	**122772570**	
Xt1200Ze Super Tenere	1200	2014	2015	DP046	2BS262800000	**122762570**	2BS262900000	**122772570**	
Mt-01	1700	2007	2007	RP181	5YU262802000	**122761240**	5YU262902000	**122771240**	
Mt-01	1700	2009	2009	RP184	5YU262802100	**122761240**	5YU262902100	**122771240**	
Mt-01S	1700	2009	2009	RP186	5YU262802100	**122761240**	5YU262902100	**122771240**	



SPECCHIETTI LATO SINISTRO - *LEFT REAR MIRRORS*



122760010

PIAGGIO: 182213

Asta Ø 8 mm - Vetro convesso
Shaft Ø 8 mm - Convex glass



122760030

HONDA: 88220-KPR-900

8 x 1,25



122760040

MALAGUTI: 8801303

8 x 1,25



122760050

MBK - YAMAHA: 5BRF62801000

8 x 1,25



122760060

GILERA - PIAGGIO: 271022

8 x 1,25



122760070

PIAGGIO: 583031

8 x 1,25



122760080

APRILIA: AP8201976

Foro passante
Passing hole



122760090

APRILIA: AP8102836

10 x 1,25



SPECCHIETTI RETROVISORI

REAR VIEW MIRRORS



122760110

PIAGGIO: 244141



122760120

APRILIA: AP8102633

2 Fori passanti
2 Passing holes



122760130

APRILIA: AP8201984

Perno cilindrico Ø 10 mm
Cylindrical pin Ø 10 mm



122760150

PEUGEOT: 738997

8 x 1,25



122760160

APRILIA: AP8201984

Perno cilindrico Ø 10 mm
Cylindrical pin Ø 10 mm



122760200

APRILIA: AP8104724

8 x 1,25



122760210

YAMAHA: 1B9F628020

8 x 1,25



122760230

APRILIA: AP8104527

10 x 1,25



122760240

APRILIA: AP8104454

10 x 1,25



122760250

MOTO GUZZI: 978570

10 x 1,25 - Con adattatore
10 x 1,25 - With adapter





122760260

APRILIA: AP8104519 | 10 x 1,25



122760270

PIAGGIO: CM178901 | Perno cilindrico Ø 10 mm *Cylindrical pin Ø 10 mm*



122760280

HONDA: 88220-MCT-013 – 88120-MFG-D00 | 10 x 1,25 - Con adattatore *10 x 1,25 - With adapter*



122760290

APRILIA: AP8104492 | 10 x 1,25



122760300

APRILIA: AP8102867 – AP8104865 | Foro passante *Passing hole*



122760310

KYMCO: 00152305 | 8 x 1,25



122760320

APRILIA: AP8202395 | 2 Fori passanti Ø 6 mm *2 Passing holes Ø 6 mm*



122760330

GILERA: CM068001 | 8 x 1,25



122760340

PIAGGIO: CM071907 | 10 x 1,25



122760350

HONDA: 88220-KGF-900 | 8 x 1,25



SPECCHIETTI RETROVISORI

REAR VIEW MIRRORS



122760360

KYMCO: 00188001 | 8 x 1,25



122760370

KYMCO: 00152867 | 8 x 1,25



122760380

KYMCO: 00152521 – 88120-KEB7-E000 | 8 x 1,25



122760390

MALAGUTI: 08804803 | 10 x 1,25



122760400

PEUGEOT: 748211 | 8 x 1,25



122760410

PIAGGIO: CM174705 | 10 x 1,25



122760420

GILERA - PIAGGIO: CM073001 | 8 x 1,25



122760430

PIAGGIO: CM174708 | 8 x 1,25



122760440

PIAGGIO: CM071904 | 10 x 1,25



122760450

PIAGGIO: CM025501 | 10 x 1,25





122760470

PIAGGIO: CM073902-174802

2 Fori passanti Ø 6 mm
2 Passing holes Ø 6 mm



122760480

PIAGGIO: 581501

2 Fori passanti Ø 6 mm
2 Passing holes Ø 6 mm



122760490

PIAGGIO: 563866

8 x 1,25



122760510

PIAGGIO: 581554

8 x 1,25



122760520

PIAGGIO: CM063901

8 x 1,25



122760530

DERBI - PIAGGIO: CM027001

8 x 1,25



122760540

SYM: 88120T40000

8 x 1,25



122760550

YAMAHA: 5GJ262801000

2 Fori passanti Ø 6 mm
2 Passing holes Ø 6 mm



122760560

MBK - YAMAHA: 5CG262801000

10 x 1,25



122760570

YAMAHA: 1D0F628000

10 x 1,25



SPECCHIETTI RETROVISORI

REAR VIEW MIRRORS



122760580

KYMCO: 00153133
MBK - YAMAHA: 5ADF62801000

8 x 1,25



122760590

PIAGGIO: CM020404-CM027604

8 x 1,25



122760600

YAMAHA: 3TB262800000

10 x 1,25



122760630

GILERA: CM175008

10 x 1,25



122760640

GILERA: CM175002

10 x 1,25



122760650

APRILIA - GILERA: CM175005

Perno cilindrico Ø 10 mm
Cylindrical pin Ø 10 mm



122760660

PIAGGIO: CM179801

Perno cilindrico Ø 10 mm
Cylindrical pin Ø 10 mm



122760670

PIAGGIO: 57325R - CM020401

8 x 1,25



122760680

PIAGGIO: CM073413

8 x 1,25



122760690

PIAGGIO: CM027704

8 x 1,25





122760700

PIAGGIO: 563492 | 8 x 1,25



122760710

PIAGGIO: 565061 | 8 x 1,25



122760730

GILERA: 560897 | 10 x 1,25



122760740

PIAGGIO: CM178802 | Perno cilindrico Ø 10 mm
Cylindrical pin Ø 10 mm



122760750

GILERA: CM175016 | Perno cilindrico Ø 10 mm
Cylindrical pin Ø 10 mm



122760760

PIAGGIO: CM175011 | 10 x 1,25



122760770

PIAGGIO: CM179904 | 10 x 1,25



122760780

PIAGGIO: CM179901 | 10 x 1,25



122760790

PIAGGIO: CM181301 | Perno cilindrico Ø 10 mm
Cylindrical pin Ø 10 mm



122760800

MBK - YAMAHA: 4SBF62800000 | 8 x 1,25



SPECCHIETTI RETROVISORI

REAR VIEW MIRRORS



122760820

KYMCO: 00152913N | 10 x 1,25



122760830

DERBI - PIAGGIO: CM020407 | 8 x 1,25



122760840

PIAGGIO: 622830 | 8 x 1,25



122760850

YAMAHA: 4NB262800000 | 10 x 1,25



122760860

YAMAHA: 1B9F62801000 | 8 x 1,25



122760870

APRILIA: AP8202170 | 10 x 1,25



122760880

YAMAHA: 5C2F62800000 | 8 x 1,25



122760890

SUZUKI: 56600-0F00-000 | 10 x 1,25



122760900

YAMAHA: 4B5262801900 | 2 Fori passanti Ø 6 mm
2 Passing holes Ø 6 mm



122760910

KYMCO: 00152116 | 8 x 1,25





122760920

PIAGGIO CLASSIC	Attacco con piastra *With mounting plate*



122760930

PIAGGIO: CM071913	10 x 1,25



122760940

GILERA: CM066002	10 x 1,25



122760950

PIAGGIO: 582891	8 x 1,25



122760960

PIAGGIO: CM180302	2 Fori passanti *2 Passing holes*



122760970

PIAGGIO: CM175019	8 x 1,25



122760980

GILERA: 583111	10 x 1,25



122761020

SUZUKI: 56600-39CF0-000	10 x 1,25



122761040

SYM: 88120APA000	8 x 1,25



122761050

HONDA: 82220-GFM-B20	8 x 1,25



SPECCHIETTI RETROVISORI

REAR VIEW MIRRORS



122761060

HONDA: 88220-KWN-900 | 10 x 1,25



122761080

YAMAHA: 52SF62800000 | 8 x 1,25



122761090

YAMAHA: 59C262800000 | 2 Fori passanti Ø 6 mm / *2 Passing holes Ø 6 mm*



122761100

HONDA: 88220-MGS-D30 | 10 x 1,25 - Con adattatore / *10 x 1,25 - With adapter*



122761110

SYM: 88120ANA000 | 8 x 1,25



122761120

PIAGGIO: CM182002 - CM182005 | 8 x 1,25



122761130

HONDA: 88220-K01-D01 | 8 x 1,25



122761150

KYMCO: 00188023 | 8 x 1,25



122761160

PIAGGIO: CM020410 | 8 x 1,25



122761170

PIAGGIO: CM020412 | 8 x 1,25





122761180

SYM: 88120LVA000 | 10 x 1,25



122761190

HONDA: 88220-K04-930 | 10 x 1,25



122761200

PIAGGIO: CM182101-CM261901 | 8 x 1,25



122761210

KYMCO: 00152957 | 10 x 1,25



122761220

YAMAHA: 4TX262905000 | 10 x 1,25



122761240

YAMAHA: 5YU262802000 | 10 x 1,25



122761250

HONDA: 88120-MBW-003 | 2 Fori M6 / *2 Holes M6*



122761260

YAMAHA: 2D1262800100 | 10 x 1,25



122761270

KAWASAKI: 560010117 | 10 x 1,25



122761290

KAWASAKI: 560010051 | 10 x 1,25



SPECCHIETTI RETROVISORI

REAR VIEW MIRRORS



122761300

KAWASAKI: 560010030 | 10 x 1,25



122761310

HONDA: 88120-MEL-003 | 2 Fori M6 / *2 Holes M6*



122761330

BMW: 51167715861 | 10 x 1,25



122761360

YAMAHA: 20S262800000 | 10 x 1,25



122761370

DUCATI: 52340153A | 10 x 1,25



122761380

DUCATI: 52340232A | Foro passante Ø 8 mm / *Passing hole Ø 8 mm*



122761390

HONDA: 88220-MY1-003 | 10 x 1,25



122761410

HONDA: 88220-MGH-640 | 12 x 1,25



122761420

SUZUKI: 56600-04F20-000 | 10 x 1,25



122761430

SUZUKI: 56600-08J00-000 | 10 x 1,25





122761440

SUZUKI: 56600-38G10-000	10 x 1,25



122761450

SUZUKI: 56600-41F40-000	10 x 1,25



122761460

TRIUMPH: T2066710	Foro passante *Passing hole*



122761480

YAMAHA: 5VKF628000	10 x 1,25



122761490

YAMAHA: 1D2F62800000	10 x 1,25



122761500

HONDA: 88220-MBZ-K00	10 x 1,25



122761530

YAMAHA: 1B3262801000	10 x 1,25



122761540

APRILIA: AP8104922	10 x 1,25



122761550

HONDA: 88220-K29-901	Perno M10 *M10 Pin*



122761560

PEUGEOT: 774986	10 x 1,25



SPECCHIETTI RETROVISORI

REAR VIEW MIRRORS



122761570

PEUGEOT: 772581



122761590

GENERIC
KEEWAY: 40460BMBT000
PEUGEOT: 881201

8 x 1,25



122761610

MALAGUTI: 08805303

8 x 1,25



122761620

YAMAHA: 5B2F62800100

8 x 1,25



122761630

PEUGEOT: 770021

10 x 1,25



122761640

MBK - YAMAHA: 5SEF62800000

8 x 1,25



122761650

KYMCO: 00188026

10 x 1,25



122761660

PEUGEOT: 761702

8 x 1,25



122761670

PEUGEOT: 746782

8 x 1,25



122761680

SUZUKI: 56600-49F10-000

10 x 1,25





122761700

KYMCO: 00188058	10 x 1,25



122761710

SYM: 88120LDA000	8 x 1,25



122761720

KYMCO: 00188034	10 x 1,25



122761730

SYM: 88120H9D000	10 x 1,25



122761740

SYM: 88120H9A00	10 x 1,25



122761750

YAMAHA: 1RC262900000	10 x 1,25



122761760

YAMAHA: 37PF62800100	10 x 1,25



122761770

SYM: 88120H9A910	10 x 1,25



122761800

SUZUKI: 56600-19F00-000	2 Perni M6 *2 M6 Pins*



122761810

HONDA: 88120-MFL-003	2 Fori passanti Ø 6 mm *2 Passing holes Ø 6 mm*



SPECCHIETTI RETROVISORI

REAR VIEW MIRRORS



122761830

TRIUMPH: T2066706	2 Perni M6 *2 M6 Pins*



122761840

SUZUKI: 5660-31F00-000	2 Perni M6 *2 M6 Pins*



122761850

KAWASAKI: 560010142	2 Perni M6 *2 M6 Pins*



122761860

TRIUMPH: T2060061	Perno Ø 11 mm *Ø 11 mm Pin*



122761870

BMW: 51167688656	Perno cilindrico Ø 10 mm *Cylindrical pin Ø 10 mm*



122761880

BMW: 51167714111 - 51168528	2 Fori passanti Ø 6 mm *2 Passing holes Ø 6 mm*



122761890

YAMAHA: 36P26280000	2 Perni M6 *2 M6 Pins*



122761900

DUCATI: 52310341A	Foro passante Ø 8 mm *Passing hole Ø 8 mm*



122761910

KAWASAKI: 560010043	2 Perni M6 *2 M6 Pins*



122761920

MV AGUSTA: 80B0A3228	2 Fori passanti Ø 6 mm *2 Passing holes Ø 6 mm*





122761930

HONDA: 88220-MY5-F10 | 10 x 1,25



122761940

HONDA: 88120-MCW-D01 | 2 Fori passanti Ø 6 mm / *2 Passing holes Ø 6 mm*



122761950

YAMAHA: 4S8262800000 | 2 Perni M6 / *2 M6 Pins*



122761960

SUZUKI: 56600-44G10-000 | 10 x 1,25



122761970

SUZUKI: 56600-29G10-000 | 2 Fori passanti Ø 6 mm / *2 Passing holes Ø 6 mm*



122761980

SUZUKI: 56600-38G21-000 | 2 Fori passanti / *2 Passing holes*



122761990

SUZUKI: 56600-40F10-000 | 2 Fori passanti / *2 Passing holes*



122762000

YAMAHA: 5VY262800000 | 2 Perni M6 / *2 M6 Pins*



122762010

YAMAHA: 5D7F62800100 | 2 Fori passanti Ø 6 mm / *2 Passing holes Ø 6 mm*



122762020

APRILIA: AP8102325 | Perno cilindrico Ø 10 mm / *Cylindrical pin Ø 10 mm*



SPECCHIETTI RETROVISORI

REAR VIEW MIRRORS



122762030

SUZUKI: 56600-24F20-000	2 Fori passanti Ø 6 mm *2 Passing holes Ø 6 mm*



122762040

HONDA: 88120-MER-D00	2 Fori passanti *2 Passing holes*



122762050

PIAGGIO: CM073418	8 x 1,25



122762060

YAMAHA: 42P262800000	2 Perni M6 *2 M6 Pins*



122762070

YAMAHA: 3C32628000000	2 Perni M6 *2 M6 Pins*



122762080

HONDA: 88220-MGR-641	10 x 1,25



122762090

MV AGUSTA: 80B098339	Foro passante Ø 8 mm *Passing hole Ø 8 mm*



122762100

YAMAHA: 4TX262800000	10 x 1,25



122762110

YAMAHA: 5LV262800000	2 Perni M6 *2 M6 Pins*



122762120

HONDA: 88120-MBG-D01	2 Fori passanti Ø 6 mm *2 Passing holes Ø 6 mm*





122762130

SUZUKI: 56600-38G00-000	2 Fori passanti Ø 6 mm *2 Passing holes Ø 6 mm*



122762140

HONDA: 88120-MCJ-003	2 Fori passanti Ø 6 mm *2 Passing holes Ø 6 mm*



122762150

KAWASAKI: 560010098	2 Perni M6 *2 M6 Pins*



122762160

SUZUKI: 56600-16G10-000	2 Fori passanti Ø 6 mm *2 Passing holes Ø 6 mm*



122762170

HONDA: 88120-MER-R01	2 Fori passanti Ø 6 mm *2 Passing holes Ø 6 mm*



122762180

HONDA: 88120-MEW-921	2 Fori passanti Ø 6 mm *2 Passing holes Ø 6 mm*



122762230

YAMAHA: 4BR262800000	10 x 1,25



122762240

APRILIA: CM260001	Perno cilindrico Ø 10 mm *Cylindrical pin Ø 10 mm*



122762270

HONDA: 88120-KWF-951	10 x 1,25



122762300

KAWASAKI: 560010146	2 Fori Ø 6 mm *2 Holes Ø 6 mm*



SPECCHIETTI RETROVISORI

REAR VIEW MIRRORS



122762310

KAWASAKI: 560010288	2 Fori Ø 6 mm *2 Holes Ø 6 mm*



122762350

APRILIA: 2B001544	2 Perni M6 *2 M6 Pins*



122762360

APRILIA: CM259901	Perno cilindrico Ø 10 mm *Cylindrical pin Ø 10 mm*



122762370

BMW: 51167718513	2 Perni M6 *2 M6 Pins*



122762380

BMW: 51168556083	3 Fori Ø 6 mm *3 Holes Ø 6 mm*



122762390

DUCATI: 52310452A	Foro passante Ø 8 mm *Passing hole Ø 8 mm*



122762400

DUCATI: 52310481B	10 x 1,25



122762410

DUCATI: 52310472A	Foro Ø 10 mm *Hole Ø 10 mm*



122762420

DUCATI: 523S0291A - 523S0292B	2 Fori Ø 6 mm *2 Holes Ø 6 mm*



122762430

HONDA: 88120-K33-D01	2 Fori Ø 6 mm *2 Holes Ø 6 mm*





122762440

HONDA: 88220-MJE-D40	10 x 1,25



122762450

HONDA: 88120-MJE-D01	2 Fori Ø 6 mm *2 Holes Ø 6 mm*



122762460

HONDA: 88120-MGZ-J01	2 Fori Ø 6 mm *2 Holes Ø 6 mm*



122762470

KAWASAKI: 560010245	2 Fori Ø 6 mm *2 Holes Ø 6 mm*



122762480

KAWASAKI: 560010272	10 x 1,25



122762490

KAWASAKI: 560010194	10 x 1,25



122762500

KAWASAKI: 560010239	2 Fori passanti Ø 6 mm *2 Passing holes Ø 6 mm*



122762510

KAWASAKI: 560010243	10 x 1,25



122762520

KAWASAKI: 560010259	2 Perni M6 *2 M6 Pins*



122762530

PIAGGIO: CM020417	8 x 1,25



SPECCHIETTI RETROVISORI

REAR VIEW MIRRORS



122762540

PIAGGIO: CM262001	8 x 1,25



122762550

SYM: 88120HHA000	8 x 1,25



122762560

YAMAHA: 1WDF62801000	2 Fori passanti Ø 6 mm *2 Passing holes Ø 6 mm*



122762570

YAMAHA: 2BS262800000	10 x 1,25



122762580

SUZUKI: 56600-12J00-000	10 x 1,25



122762590

HONDA: 88220-KPN-A71	10 x 1,25



122762600

KAWASAKI: 560010297	10 x 1,25



122762610

KAWASAKI: 560010215	10 x 1,25



122762620

KAWASAKI: 560010231	2 Perni M6 *2 M6 Pins*



122762630

KAWASAKI: 560010274	2 Perni M6 *2 M6 Pins*





122762640

SUZUKI: 56600-18H00-000	2 Fori passanti Ø 6 mm *2 Passing holes Ø 6 mm*



122762650

YAMAHA: 1D4F62800000	10 x 1,25



122762660

SUZUKI: 56660-48H10-000	10 x 1,25



122762670

SUZUKI: 56600-10JF0-000	10 x 1,25



122762680

YAMAHA: 54SF62800000	10 x 1,25



122762690

KAWASAKI: 560010233	2 Perni M6 *2 M6 Pins*



122762700

YAMAHA: 2PW262800000	2 Fori passanti Ø 6 mm *2 Passing holes Ø 6 mm*



122762710

YAMAHA: 1DKF62801000	8 x 1,25



122762720

HONDA: 88220-KTW-900	8 x 1,25



122762730

KAWASAKI: 560010299	10 x 1,25



SPECCHIETTI RETROVISORI

REAR VIEW MIRRORS



122762740

PIAGGIO: CM073427 | 8 x 1,25



122762750

PEUGEOT: 732513 | M8



122762760

PEUGEOT: 734966 | M8 x 1,25



122762770

YAMAHA: B34F62800000 | M10



122762800 NEW

YAMAHA: B74F62800000 | M10



122762810 NEW

YAMAHA: 5D7F62801000 | M10



122762850 NEW

PEUGEOT: 801981 | M8



122762860 NEW

PIAGGIO: CM180604 | M8



122762870 NEW

PIAGGIO: CM179907 | Perno cilindrico Ø 10 mm
Cylindrical pin Ø 10 mm



122762880 NEW

PIAGGIO: CM262013 | M8





122762890 NEW

BMW: 51167723405	Perno cilindrico Ø 12 mm - Con adattatore *Cylindrical pin Ø 12 mm - With adapter*



122762910 NEW

HONDA: 88220-MCT-692	M10



122762920 NEW

HONDA: 88220-K77-D00	M10 - Con adattatore *M10 - With adapter*



122762930 NEW

HONDA: 88220-MBZ-K01	M10



122762940 NEW

KAWASAKI: 560010241	M10

SPECCHIETTI LATO DESTRO - *RIGHT REAR MIRRORS*



122770030

HONDA: 88210-KPR-900	8 x 1,25



122770040

MALGUTI: R.O. 8801403	8 x 1,25



122770050

MBK - YAMAHA: 5BRF62901000 | 8 x 1,25



122770060

GILERA - PIAGGIO: 271018 | 8 x 1,25



122770070

PIAGGIO: 583033 | 8 x 1,25



122770080

APRILIA: AP8201975 | Foro passante / *Passing hole*



122770090

APRILIA: AP8102835 | 10 x 1,25



122770120

APRILIA: AP8102632 | 2 Fori passanti / *2 Passing holes*



122770150

PEUGEOT: 738998 | 8 x 1,25



122770200

APRILIA: AP8104723 | 8 x 1,25



122770210

YAMAHA: 1B9F62902000 | 8 x 1,25



122770230

APRILIA: AP8104526 | 10 x 1,25





122770240

APRILIA: AP8104453

10 x 1,25 - Snodo 360°
10 x 1,25 - Junction 360°



122770250

MOTO GUZZI: 978570

10 x 1,25 - Con adattatore
10 x 1,25 - With adapter



122770260

APRILIA: AP8104518

10 x 1,25



122770270

PIAGGIO: CM178902

Perno cilindrico Ø 10 mm
Cylindrical pin Ø 10 mm



122770280

HONDA: 88210-MCT-013 – 88110-MFG-D00

10 x 1,25 - Con adattatore
10 x 1,25 - With adapter



122770290

APRILIA: AP8104491

10 x 1,25



122770300

APRILIA: AP8102866 - AP8104864

Foro passante
Passing hole



122770310

KYMCO: 00152304

8 x 1,25



122770320

APRILIA: AP8202394

2 Fori passanti Ø 6 mm
2 Passing holes Ø 6 mm



122770330

GILERA: CM068002

8 x 1,25



SPECCHIETTI RETROVISORI

REAR VIEW MIRRORS



122770340

PIAGGIO: CM071908 | 10 x 1,25



122770350

HONDA: 88210-KGF-900 | 8 x 1,25



122770360

KYMCO: 00188000 | 8 x 1,25



122770370

KYMCO: 00152866 | 8 x 1,25



122770380

KYMCO: 00152500 – 88110-KEB7-E000 | 8 x 1,25



122770390

MALAGUTI: 08804903 | 10 x 1,25



122770400

PEUGEOT: 748212 | 8 x 1,25



122770410

PIAGGIO: CM174706 | 10 x 1,25



122770420

GILERA - PIAGGIO: CM073002 | 8 x 1,25



122770430

PIAGGIO: CM174709 | 8 x 1,25





122770440

PIAGGIO: CM071905 | 10 x 1,25



122770450

PIAGGIO: CM025502 | 10 x 1,25



122770470

PIAGGIO: CM073901 - 174801 | 2 Fori passanti Ø 6 mm / *2 Passing holes Ø 6 mm*



122770480

PIAGGIO: 581500 | 2 Fori passanti Ø 6 mm / *2 Passing holes Ø 6 mm*



122770490

PIAGGIO: 563865 | 8 x 1,25



122770510

PIAGGIO: 581555 | 8 x 1,25



122770520

PIAGGIO: CM063902 | 8 x 1,25



122770530

DERBI - PIAGGIO: CM027002 | 8 x 1,25



122770540

SYM: 88110T40000 | 8 x 1,25



122770550

YAMAHA: 5GJ262901000 | 2 Fori passanti Ø 6 mm / *2 Passing holes Ø 6 mm*



SPECCHIETTI RETROVISORI

REAR VIEW MIRRORS



122770560

MBK - YAMAHA: 5CG262901000 | 10 x 1,25



122770570

YAMAHA: 1D0F62900000 | 10 x 1,25



122770580

MBK - YAMAHA: 5ADF62901000 | 8 x 1,25



122770590

PIAGGIO: CM020405 - CM027605 | 8 x 1,25



122770610

KYMCO: 00153132 | 8 x 1,25



122770630

GILERA: CM175007 | 10 x 1,25



122770640

GILERA: CM175003 | 10 x 1,25



122770650

APRILIA - GILERA: CM175006 | Perno Cilindrico Ø 10 mm *Cylindrical pin Ø 10 mm*



122770660

PIAGGIO: CM179802 | Perno Cilindrico Ø 10 mm *Cylindrical pin Ø 10 mm*



122770670

PIAGGIO: 57325R - CM020402 | 8 x 1,25





122770680

PIAGGIO: CM073414 | 8 x 1,25



122770690

PIAGGIO: CM027705 | 8 x 1,25



122770700

PIAGGIO: 563496 | 8 x 1,25



122770710

PIAGGIO: 565062 | 8 x 1,25



122770730

GILERA: 561168 | 10 x 1,25



122770740

PIAGGIO: CM178801 | Perno cilindrico Ø 10 mm
Cylindrical pin Ø 10 mm



122770750

GILERA: CM175017 | Perno Cilindrico Ø 10 mm
Cylindrical pin Ø 10 mm



122770760

PIAGGIO: CM175012 | 10 x 1,25



122770770

PIAGGIO: CM179905 | 10 x 1,25



122770780

PIAGGIO: CM179902 | 10 x 1,25



SPECCHIETTI RETROVISORI

REAR VIEW MIRRORS



122770790

PIAGGIO: CM181302

Perno cilindrico Ø 10 mm
Cylindrical pin Ø 10 mm



122770800

MBK - YAMAHA: 4SBF62900000

8 x 1,25



122770820

KYMCO: 00152910N

10 x 1,25



122770830

DERBI - PIAGGIO: CM020408

8 x 1,25



122770840

PIAGGIO: 599361

8 x 1,25



122770850

YAMAHA: 4NB262900000

10 x 1,25



122770860

YAMAHA: 1B9F62901000

8 x 1,25



122770870

APRILIA: AP8202166

10 x 1,25



122770880

YAMAHA: 5C2F62900000

8 x 1,25



122770890

SUZUKI: 56500-03F00-000

10 x 1,25





122770900

YAMAHA: 4B5262901900	2 Fori passanti Ø 6 mm *2 Passing holes Ø 6 mm*



122770910

KYMCO: 00152115	8 x 1,25



122770920

PIAGGIO CLASSIC	Attacco con Piastra - Ø 105 mm *With mounting plate - Ø 105 mm*



122770930

PIAGGIO: CM071914	10 x 1,25



122770940

GILERA: CM066001	10 x 1,25



122770950

PIAGGIO: 582892	8 x 1,25



122770960

PIAGGIO: CM180301	2 Fori passanti *2 Passing holes*



122770970

PIAGGIO: CM175020	8 x 1,25



122771020

SUZUKI: 56500-39CF0-000	10 x 1,25



122771040

SYM: 88110APA000	8 x 1,25



SPECCHIETTI RETROVISORI

REAR VIEW MIRRORS



122771050

HONDA: 82210-GFM-B20 | 8 x 1,25



122771060

HONDA: 88210-KWN-900 | 10 x 1,25



122771080

YAMAHA: 52SF62900000 | 8 x 1,25



122771090

YAMAHA: 59C262900000 | 2 Fori passanti Ø 6 mm
2 Passing holes Ø 6 mm



122771100

HONDA: 88210-MGS-D30 | 10 x 1,25 - Con adattatore
10 x 1,25 - With adapter



122771110

SYM: 88110ANA000 | 8 x 1,25



122771120

PIAGGIO: CM182003 - CM182006 | 8 x 1,25



122771130

HONDA: 88210-K01-D01 | 8 x 1,25



122771150

KYMCO: 00188024 | 8 x 1,25



122771160

PIAGGIO: CM020411 | 8 x 1,25





122771180

SYM: 88110LVA000 | 10 x 1,25



122771190

HONDA: 88210-K04-930 | 10 x 1,25



122771200

PIAGGIO: CM182102 - CM261902 | 8 x 1,25



122771210

KYMCO: 00152956 | 10 x 1,25



122771220

YAMAHA: 4TX262805000 | 10 x 1,25



122771230

APRILIA: AP8104566 | 10 x 1,25



122771240

YAMAHA: 5YU262902000 | 10 x 1,25



122771250

HONDA: 88110-MBW-003 | 2 Fori M6 / *2 Holes M6*



122771260

YAMAHA: 2D1262900100 | 10 x 1,25



122771270

KAWASAKI: 560010054 | 10 x 1,25



SPECCHIETTI RETROVISORI

REAR VIEW MIRRORS



122771280

BMW: 51161451523	8 x 1,25



122771290

KAWASAKI: 560010122	10 x 1,25



122771300

KAWASAKI: 560010031	10 x 1,25



122771310

HONDA: 88110-MEL-003	2 Fori M6 *2 Holes M6*



122771320

BMW: 51167697241 - 51167699791	Perno Cilindrico Ø 10 mm *Cylindrical pin Ø 10 mm*



122771330

BMW: 51167715862	10 x 1,25



122771340

HONDA: 88110-KW4-600	10 x 1,25



122771350

BMW: 51167685505	10 x 1,25



122771360

YAMAHA: 20S262900000	10 x 1,25



122771370

DUCATI: 52340143A	10 x 1,25





122771380

DUCATI: 52340222A

Foro passante Ø 8 mm
Passing hole Ø 8 mm



122771390

HONDA: 88210-MY1-003

10 x 1,25



122771400

HONDA: 88110-MN9-003

10 x 1,25



122771410

HONDA: 88210-MGH-640

12 x 1,25



122771420

SUZUKI: 56500-04F20-000

10 x 1,25



122771430

SUZUKI: 56500-08J00-000

10 x 1,25



122771440

SUZUKI: 56500-38G10-000

10 x 1,25



122771450

SUZUKI: 56500-41F40-000

10 x 1,25



122771460

TRIUMPH: T2066711

Foro passante
Passing hole



122771470

TRIUMPH: T2300537-P

10 x 1,25



122771480

YAMAHA: 5VKF629000 | 10 x 1,25



122771490

YAMAHA: 1D2F62900000 | 10 x 1,25



122771500

HONDA: 88210-MBZ-K00 | 10 x 1,25



122771530

YAMAHA: 1B3262901000 | 10 x 1,25



122771540

APRILIA: AP8104921 | 10 x 1,25



122771550

HONDA: 88210-K29-901 | Perno M10 *M10 Pin*



122771570

PEUGEOT: 772582



122771580

PIAGGIO CLASSIC | 8 x 1,25



122771590

GENERIC
KEEWAY: 40470BMBT000
PEUGEOT: 881200 | 8 x 1,25



122771610

MALAGUTI: 08805203 | 8 x 1,25





122771620

YAMAHA: 5B2F62900100 | 8 x 1,25



122771630

PEUGEOT: 770022 | 10 x 1,25



122771640

MBK - YAMAHA: 5SEF62900000 | 8 x 1,25



122771650

KYMCO: 00188025 | 10 x 1,25



122771660

PEUGEOT: 761701 | 8 x 1,25



122771670

PEUGEOT: 746781 | 8 x 1,25



122771680

SUZUKI: 56500-49F10-000 | 10 x 1,25



122771700

KYMCO: 00188057 | 10 x 1,25



122771710

SYM: 88110LDA000 | 8 x 1,25



122771720

KYMCO: 00188031 | 10 x 1,25



122771730

SYM: 88110H9D000 | 10 x 1,25



122771740

SYM: 88110H9A000 | 10 x 1,25



122771750

YAMAHA: 1RC262800000 | 10 x 1,25



122771760

YAMAHA: 37PF62900100 | 10 x 1,25



122771770

SYM: 88110H9A910 | 10 x 1,25



122771780

PIAGGIO CLASSIC | 8 x 1,25



122771790

PIAGGIO CLASSIC | 8 x 1,25



122771800

SUZUKI: 56500-19F00-000 | 2 Perni M6 *2 M6 Pins*



122771810

HONDA: 88110-MFL-003 | 2 Fori passanti Ø 6 mm *2 Passing holes Ø 6 mm*



122771830

TRIUMPH: T2066706 | 2 Perni M6 *2 M6 Pins*





122771840

SUZUKI: 56500-31F00-000	2 Perni M6 *2 M6 Pins*



122771850

KAWASAKI: 560010143	2 Perni M6 *2 M6 Pins*



122771860

TRIUMPH: T2060060	Perno Ø 11 mm *Ø 11 mm Pin*



122771870

BMW: 51167688655	Perno Cilindrico Ø 10 mm *Cylindrical pin Ø 10 mm*



122771880

BMW: 51167714112	2 Fori passanti Ø 6 mm *2 Passing holes Ø 6 mm*



122771890

YAMAHA: 36P26290000	2 Perni M6 *2 M6 Pins*



122771900

DUCATI: 52310351A	Foro passante Ø 8 mm *Passing hole Ø 8 mm*



122771910

KAWASAKI: 560010044	2 Perni M6 *2 M6 Pins*



122771920

MV AGUSTA: 80B0A3229	2 Fori passanti Ø 6 mm *2 Passing holes Ø 6 mm*



122771930

HONDA: 88210-MY5-F10	10 x 1,25



122771940

HONDA: 88110-MCW-D01

2 Fori passanti Ø 6 mm
2 Passing holes Ø 6 mm



122771950

YAMAHA: 4S8262900000

2 Perni M6
2 M6 Pins



122771960

SUZUKI: 56500-44G10-000

10 x 1,25



122771970

SUZUKI: 56500-29G10-000

2 Fori passanti Ø 6 mm
2 Passing holes Ø 6 mm



122771980

SUZUKI: 56500-38G21-000

2 Fori passanti
2 Passing holes



122771990

SUZUKI: 56500-40F10-000

2 Fori passanti
2 Passing holes



122772000

YAMAHA: 5VY262900000

2 Perni M6
2 M6 Pins



122772010

YAMAHA: 5D7F62900100

2 Fori passanti Ø 6 mm
2 Passing holes Ø 6 mm



122772020

APRILIA: AP8102324

Perno cilindrico Ø 10 mm
Cylindrical pin Ø 10 mm



122772030

SUZUKI: 56500-24F20-000

2 Fori passanti Ø 6 mm
2 Passing holes Ø 6 mm





122772040

HONDA: 88110-MER-D00	2 Fori passanti *2 Passing holes*



122772050

PIAGGIO: CM073419	8 x 1,25



122772060

YAMAHA: 42P262900000	2 Perni M6 *2 M6 Pins*



122772070

YAMAHA: 3C3262900000	2 Perni M6 *2 M6 Pins*



122772080

HONDA: 88210-MGR-641	10 x 1,25



122772090

MV AGUSTA: 80B098338	Foro passante Ø 8 mm *Passing hole Ø 8 mm*



122772100

YAMAHA: 3VD262900100	10 x 1,25



122772110

YAMAHA: 5LV262900000	2 Perni M6 *2 M6 Pins*



122772120

HONDA: 88110-MBG-D01	2 Fori passanti Ø 6 mm *2 Passing holes Ø 6 mm*



122772130

SUZUKI: 56500-38G00-000	2 Fori passanti Ø 6 mm *2 Passing holes Ø 6 mm*



122772140

HONDA: 88110-MCJ-003

2 Fori passanti Ø 6 mm
2 Passing holes Ø 6 mm



122772150

KAWASAKI: 560010099

2 Perni M6
2 M6 Pins



122772160

SUZUKI: 56500-16G10-000

2 Fori passanti Ø 6 mm
2 Passing holes Ø 6 mm



122772170

HONDA: 88110-MER-R01

2 Fori passanti Ø 6 mm
2 Passing holes Ø 6 mm



122772180

HONDA: 88110-MEW-921

2 Fori passanti Ø 6 mm
2 Passing holes Ø 6 mm



122772200

BMW: 71607699091

Perno Cilindrico Ø 10 mm
Cylindrical pin Ø 10 mm



122772210

HUSQVARNA: 800058378

10 x 1,25



122772220

BMW: 51167686618

Perno Cilindrico Ø 10 mm
Cylindrical pin Ø 10 mm



122772230

YAMAHA: 4BR262900000

10 x 1,25



122772240

APRILIA: CM260002

Perno Cilindrico Ø 10 mm
Cylindrical pin Ø 10 mm





122772270

HONDA: 88110-KWF-951	10 x 1,25



122772300

KAWASAKI: 560010147	2 Fori Ø 6 mm *2 Holes Ø 6 mm*



122772310

KAWASAKI: 560010289	2 Fori Ø 6 mm *2 Holes Ø 6 mm*



122772350

APRILIA: 2B001543	2 Perni M6 *2 M6 Pins*



122772360

APRILIA: CM260002	Perno Cilindrico Ø 10 mm *Cylindrical pin Ø 10 mm*



122772370

BMW: 51167718514	2 Perni M6 *2 M6 Pins*



122772380

BMW: 51168556084	3 Fori Ø 6 mm *3 Holes Ø 6 mm*



122772390

DUCATI: 52310442A	Foro passante Ø 8 mm *Passing hole Ø 8 mm*



122772400

DUCATI: 52310491B	10 x 1,25



122772410

DUCATI: 52310462A	Foro Ø 10 mm *Hole Ø 10 mm*



SPECCHIETTI RETROVISORI

REAR VIEW MIRRORS



122772420

DUCATI: 52350282B	2 Fori Ø 6 mm *2 Holes Ø 6 mm*



122772430

HONDA: 88110-K33-D01	2 Fori Ø 6 mm *2 Holes Ø 6 mm*



122772440

HONDA: 88210-MJE-D40	10 x 1,25



122772450

HONDA: 88110-MJE-D01	2 Fori Ø 6 mm *2 Holes Ø 6 mm*



122772460

HONDA: 88110-MGZ-J01	2 Fori Ø 6 mm *2 Holes Ø 6 mm*



122772470

KAWASAKI: 560010246	2 Fori Ø 6 mm *2 Holes Ø 6 mm*



122772480

KAWASAKI: 560010273	10 x 1,25



122772490

KAWASAKI: 560010195	10 x 1,25



122772500

KAWASAKI: 560010240	2 Fori passanti Ø 6 mm *2 Passing holes Ø 6 mm*



122772510

KAWASAKI: 560010244	10 x 1,25





122772520

KAWASAKI: 560010260

2 Perni M6
2 M6 Pins



122772530

PIAGGIO: CM020418

8 x 1,25



122772540

PIAGGIO: CM262002

8 x 1,25



122772550

SYM: 88110HHA000

8 x 1,25



122772560

YAMAHA: 1WDF62901000

2 Fori passanti Ø 6 mm
2 Passing holes Ø 6 mm



122772570

YAMAHA: 2BS262900000

10 x 1,25



122772580

SUZUKI: 56500-12J00-000

10 x 1,25



122772590

HONDA: 88210-KPN-A71

10 x 1,25



122772600

KAWASAKI: 560010298

10 x 1,25



122772610

KAWASAKI: 560010216

10 x 1,25



122772620

KAWASAKI: 560010232 — 2 Perni M6 / *2 M6 Pins*



122772630

KAWASAKI: 560010275 — 2 Perni M6 / *2 M6 Pins*



122772640

SUZUKI: 56500-18H00-000 — 2 Fori passanti Ø 6 mm / *2 Passing holes Ø 6 mm*



122772650

YAMAHA: 1D4F62900000 — 8 x 1,25



122772660

SUZUKI: 56500-48H10-000 — 10 x 1,25



122772670

SUZUKI: 56500-10JF0-000 — 10 x 1,25



122772680

YAMAHA: 54SF62900000 — 10 x 1,25



122772690

KAWASAKI: 560010234 — 2 Perni M6 / *2 M6 Pins*



122772700

YAMAHA: 2PW262900000 — 2 Fori passanti Ø 6 mm / *2 Passing holes Ø 6 mm*



122772710

YAMAHA: 1DKF62901000 — 8 x 1,25





122772730

KAWASAKI: 560010300	10 x 1,25



122772740

PIAGGIO: CM073428	8 x 1,25



122772750

PEUGEOT: 732512	M8



122772760

PEUGEOT: 734967	M8 x 1,25



122772770

YAMAHA: B34F62900000	M10



122772810 NEW

YAMAHA: B74F2629000	M10



122772820 NEW

YAMAHA: 5D7F62901000	M10



122772850 NEW

PEUGEOT: 801980	M8



122772860 NEW

PIAGGIO: CM180603	M8



122772870 NEW

PIAGGIO: CM179908	Perno cilindrico Ø 10 mm *Cylindrical pin Ø 10 mm*



SPECCHIETTI RETROVISORI

REAR VIEW MIRRORS



122772880 NEW

PIAGGIO: CM262014 | M8



122772890 NEW

BMW: 51167723406 | Perno cilindrico Ø 12 mm - Con adattatore
Cylindrical pin Ø 12 mm - With adapter



122772910 NEW

HONDA: 88210-MCT-692 | M10



122772920 NEW

HONDA: 88210-K77-D00 | M10 - Con adattatore
M10 - With adapter



122772930 NEW

HONDA: 88210-MBZ-K01 | M10



122772940 NEW

KAWASAKI: 560010242 | M10



122760100

UNIVERSALE | Asta Ø 8 mm - Vetro Ø 105 mm
Shaft Ø 8 mm - Glass Ø 105 mm



122761000

UNIVERSALE | 8 mm



122771510

UNIVERSALE | Ø foro di attacco 22 mm
Ø mounting hole 22 mm



122771690

UNIVERSALE | Con adattatori
With adapters





122772190

UNIVERSALE



122772250

UNIVERSALE

Con adattatori
With adapters



122772280

UNIVERSALE

Con adattatori
With adapters



122772290

UNIVERSALE

Con adattatori
With adapters



122772330

UNIVERSALE

Con adattatori
With adapters



122772340

UNIVERSALE

Con adattatori
With adapters



ADATTATORI SPECCHIETTI

REAR VIEW MIRRORS ADAPTERS

121850020

LATO DESTRO | *RIGHT SIDE*
Confezione Pz. 5 | *5 Pcs Packing*

APRILIA 50: Rally Liquid Cooled 96-99 • Scarabeo 93-05 • Scarabeo 2T Net 09-12 • Scarabeo 2T Euro2 Motore Piaggio 10-12 • Scarabeo Street 05-09 • Scarabeo 4T 02-06 • Scarabeo 4T 4V 10-17 • Scarabeo 4T 4V Net 10-12 • Scarabeo 4T Restyling Euro3 06-09 • Scarabeo Quattro 09 • Scarabeo Ditech 01-04
APRILIA 100: Scarabeo 4T 01-14 • Scarabeo Motore Minarelli 00 • Scarabeo Motore Yamaha 00
R.O. AP8201986



121850030

LATO SINISTRO | *LEFT SIDE*
Confezione Pz. 5 | *5 Pcs Packing*

APRILIA 50: Rally Liquid Cooled 96-99 • Scarabeo 93-05 • Scarabeo 2T Net 09-12 • Scarabeo 2T Euro2 Motore Piaggio 10-12 • Scarabeo Street 05-09 • Scarabeo 4T 02-06 • Scarabeo 4T 4V 10-17 • Scarabeo 4T 4V Net 10-12 • Scarabeo 4T Restyling Euro3 06-09 • Scarabeo Quattro 09 • Scarabeo Ditech 01-04
APRILIA 100: Scarabeo 4T 01-14 • Scarabeo Motore Minarelli 00 • Scarabeo Motore Yamaha 00
R.O. AP8201987



121850040

M8, Ø14 mm

PIAGGIO 125: Vespa PX 98-01 • Vespa PX Euro2 01-07 • Vespa PX 30 Anni 07-08 • Vespa PX 11-17
PIAGGIO 150: Vespa PX 11-17
R.O. 622391



ADATTATORI SPECCHI GENERICI - *GENERAL REAR VIEW MIRRORS ADAPTERS*

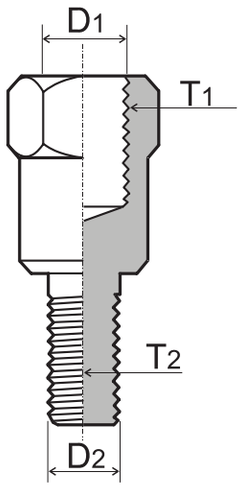

Codice RMS *RMS Code*	Codice A Barre *Barcode*	Ø D1	T1	D2	T2
121850060		M8		M10	
121850070		M8		M10	
121850080		M8		M8	
121850090		M8		M10	
121850100		M8		M10	
121850110		M8		M8	
121850120		M10		M10	
121850130		M10		M8	
121850140		M10		M8	
121850150		M10		M10	
121850160		M10		M8	
121850170		M10		M8	



121850050

SUPPORTO SPECCHIO | *MIRROR HOLDER*

PIAGGIO 125: Beverly Euro3 MIC 07 • Beverly Euro3 Sport 07-08 • Beverly Euro3 07-08 • Beverly RST 05-07 • Beverly Tourer Euro3 07-10 • Beverly 01-03 • Carnaby 07-10
PIAGGIO 200: Carnaby 07-08
PIAGGIO 250: Beverly Euro3 MIC 07 • Beverly ie Euro3 06-08 • Beverly RST 04-05 • Beverly Sport 06-08 • Beverly Tourer Euro3 07-09 • Beverly 06-07 • Carnaby 08
PIAGGIO 300: Beverly Tourer Euro3 09-10
PIAGGIO 400: Beverly Euro3 06-07 • Beverly Tourer Euro3 08-10 • X8 Euro3 06-08
PIAGGIO 500: Beverly Euro3 06-08 • Beverly 02-06
R.O. 497343



121850180

STAFFA SUPPORTO SPECCHIO CROMATA | *CHROMED MIRROR HOLDER*

PIAGGIO 125-150-200: Vespa PX 77-98





142680070

PARAFANGO ANTERIORE | *STEEL FRONT MUDGUARD*

PIAGGIO 50-90: Vespa 50-90
PIAGGIO 125: Vespa Primavera ET3
R.O. 1836806



142680080

PARAFANGO ANTERIORE | *STEEL FRONT MUDGUARD*

PIAGGIO 125-150-200: Vespa PX (Tutti i modelli - *All models)* • Vespa PXE Arcobaleno 81-97
R.O. 1774976



142680120

PARAFANGO POSTERIORE PLASTICA CON SAGOMA PORTATARGA | *PLASTIC REAR MUDGUARD WITH PLATE HOLDER*

PIAGGIO 50: Si FL2
R.O. 9248005



142680140

PARAFANGO ANTERIORE | *STEEL FRONT MUDGUARD*

PIAGGIO 150: Vespa Sprint
PIAGGIO 200: Vespa Rally
R.O. 120604



142680130

PARAFANGO ANTERIORE | *STEEL FRONT MUDGUARD*

PIAGGIO 125-150-180: Vespa PX (Modelli con freno a disco - *Brake disc models)*
R.O. 5638116



142680150

PARAFANGO ANTERIORE | *STEEL FRONT MUDGUARD*

PIAGGIO 50: Vespa PK XL Plurimatic 85-90 • PK XL Rush 88-89 • PK XL 85-88
PIAGGIO 125: Vespa PK XL 86-89
R.O. 2267546



142680180

PROTEZIONE RUOTA DI SCORTA 10" | *SPARE WHEEL COVER 10"*

PIAGGIO 125: Vespa PX-PE
VNZ-VLX-VSX
R.O. 226824



142680200

PARAFANGO ANTERIORE | *FRONT MUDGUARD*

PIAGGIO 50: Ciao PX
R.O. 2295813



142680210

PARAFANGO POSTERIORE | *REAR MUDGUARD*

PIAGGIO 50: Ciao PX
R.O. 1880953





142680220

PARAFANGO ANTERIORE INOX | *FRONT MUDGUARD INOX TYPE*

PIAGGIO 50: Ciao PX
R.O. 233678



142680230

PARAFANGO POSTERIORE INOX | *REAR MUDGUARD INOX TYPE*

PIAGGIO 50: Ciao PX
R.O. 188746



142680240

PARAFANGO ANTERIORE | *FRONT MUDGUARD*

PIAGGIO 50: Si • Si FL > 92
R.O. 267651



142680320

PARAFANGO ANTERIORE | *FRONT MUDGUARD*

PIAGGIO 50: Vespa ET4 00-05 • Vespa ET2 97-05 • Vespa ET2 Iniezione 97-00
PIAGGIO 125: Vespa ET4 96-02
R.O. 8249005



142680330

PARAFANGO ANTERIORE | *FRONT MUDGUARD*

PIAGGIO 50: Vespa N 89-90 • Vespa FL2 HP 91-97 • Vespa FL2 Automatica 90-91 • Vespa FL 90
PIAGGIO 125: Vespa FL 89-90
R.O. 911100



142680340

PARAFANGO ANTERIORE | *FRONT MUDGUARD*

PIAGGIO 50: Vespa LXV 2T Navy 08 • Vespa LXV 2T 06-09 • Vespa LX 4T 4V Touring 10-13 • Vespa LX 4T 4V 09-13 • Vespa LX 4T 05-08 • Vespa LX 2T Touring 30 Km/h 10-13 • Vespa LX 2T 05-13
PIAGGIO 125: Vespa LXV ie 4T 10-13 • Vespa LXV 4T Navy Eu3 07-08 • Vespa LXV 4T Eu3 06-09 • Vespa LX Eu3 ie 09-11 • Vespa LX Eu3 06-08 • Vespa LX 4T FL 09 • Vespa LX 4T Eu3 Touring 10-11 • Vespa LX 4T 3V ie Touring 12-13 • Vespa LX 05-06 • Vespa LX Touring 10-12 • Vespa LX Eu3 ie 09-11 • Vespa LX Eu3 06-08 • Vespa LX 4T 3V ie Touring 12-13
R.O. 666528



142680350

PARAFANGO ANTERIORE | *FRONT MUDGUARD*

PIAGGIO 125: Vespa GTS Eu3 07-12 • Vespa GTS 4T ie Super 09-15 • Vespa Granturismo Eu3 06-07
PIAGGIO 250: Vespa GTS 05-14
PIAGGIO 300: Vespa GTS Super Sport 10-13 • Vespa GTS Super 08-15 • Vespa GTS ie Touring 11-15
R.O. 651029



142680360

PARAFANGO ANTERIORE Ruota Stretta (16") | *FRONT MUDGUARD Thin Wheel (16")*

PIAGGIO 50-125 : Liberty 97-05
R.O. 5749525



142680370

PARAFANGO ANTERIORE Ruota Larga (16") | *FRONT MUDGUARD Large Wheel (16")*

PIAGGIO: Liberty elettrico PPT 11
PIAGGIO 50: Liberty 2T 97-08 • Liberty 4T 00-18
PIAGGIO 125: Liberty 01-02 • Liberty 4T 06-07 • Liberty Sport Euro3 06-08 • Liberty RST PTT 05-11 • Liberty 4T 2V ie PTT 12-13 • Liberty 4T Euro3 06-15 • Liberty Iget Corporate E4 17-19
PIAGGIO 150: Liberty 08
PIAGGIO 200: Liberty 06 • Liberty 4T Euro3 06-08
R.O. 599666





142680380

PARAFANGO ANTERIORE | *FRONT MUDGUARD*

PIAGGIO 50: Liberty Moc 2T & Elle 09-13 • Liberty Moc 4T & Elle 09-16
PIAGGIO 125: Liberty 4T 2V Eu3 09-12 • Liberty 4T 3V ie Eu3 13-14
PIAGGIO 150: Liberty Moc 4T Eu3 09-13 • Liberty 4T 3V LEM 13-14
R.O. 667180 - 655753



142680390

PARAFANGO ANTERIORE | *FRONT MUDGUARD*

PIAGGIO 125: Beverly RST 4T 4V ie Eu3 10-15
PIAGGIO 300: Beverly ABS ie E4 • Beverly RST 4T 4V ie Euro3 10-16
PIAGGIO 350: Beverly 4T 4V ie Eu3 Sport Touring 11-14 • Beverly 4T ST ie ABS 16-18
R.O. 667197



142680400

PARAFANGO ANTERIORE | *FRONT MUDGUARD*

PIAGGIO 125: Beverly Tourer Eu3 07-10
PIAGGIO 250: Beverly Tourer Eu3 07-09 • Beverly Eu3 MIC 07 • Beverly Cruiser 07-09
PIAGGIO 300: Beverly Tourer Eu3 09-10
PIAGGIO 400: Beverly Tourer Eu3 08-10
PIAGGIO 500: Beverly Cruiser 07-12
R.O. 653588



142680510

PARAFANGO ANTERIORE GREZZO | *FRONT MUDGUARD RAW BLACK*

HONDA 125-150: SH 13-16



142680520

PARAFANGO ANTERIORE NERO METALLIZZATO | *FRONT MUDGUARD BLACK METALLIZED PAINTED*

HONDA 125-150: SH 13-16



142680530

PARAFANGO ANTERIORE BIANCO METALLIZZATO | *FRONT MUDGUARD WHITE METALLIZED PAINTED*

HONDA 125-150: SH 13-16



142680570

PARAFANGO ANTERIORE NERO GREZZO | *FRONT MUDGUARD RAW BLACK*

YAMAHA 125: X-Max 14-16
YAMAHA 250: X-Max 14-16
YAMAHA 400: X-Max 13-17
R.O. 37PF151100PB



142680580

PARAFANGO ANTERIORE BIANCO GREZZO | *FRONT MUDGUARD RAW WHITE*

YAMAHA 125: X-Max 14-16
YAMAHA 250: X-Max 14-16
YAMAHA 400: X-Max 13-17
R.O. 37PF151100PL



142680670

PARAFANGO ANTERIORE NERO GREZZO | *FRONT MUDGUARD RAW BLACK*

HONDA 300: SH 07-16





142680680

PARAFANGO ANTERIORE NERO METALLIZZATO | *FRONT MUDGUARD BLACK METALLIZED PAINTED*

HONDA 300: SH 07-16



142680690

PARAFANGO ANTERIORE BIANCO METALLIZZATO | *FRONT MUDGUARD WHITE METALLIZED PAINTED*

HONDA 300: SH 07-16

142680700

PARAFANGO ANTERIORE NERO METALLIZZATO | *FRONT MUDGUARD BLACK METALLIZED PAINTED*

YAMAHA 125: X-Max 14-16
YAMAHA 250: X-Max 14-16
YAMAHA 400: X-Max 13-17
R.O. 37PF151100PB



142680710

PARAFANGO ANTERIORE BIANCO METALLIZZATO | *FRONT MUDGUARD WHITE METALLIZED PAINTED*

YAMAHA 125: X-Max 14-16
YAMAHA 250: X-Max 14-16
YAMAHA 400: X-Max 13-17
R.O. 37PF151100PL





142660060

CRESTA PARAFANGO ALLUMINIO | *ALLOY FENDER CREST*

PIAGGIO 50: Vespa 50 Special
PIAGGIO 125: Vespa TS
PIAGGIO 150: Vespa Sprint Veloce
R.O. 1247085



142660070

CRESTA PARAFANGO ALLUMINIO | *ALLOY FENDER CREST*

PIAGGIO 125: Vespa GT • Vespa GTR
PIAGGIO 150: Vespa Sprint
PIAGGIO 160: Vespa GS
PIAGGIO 180: Vespa SS
R.O. 097214



142660080

CRESTA PARAFANGO ALLUMINIO | *ALLOY FENDER CREST*

PIAGGIO 50: Vespa R • Vespa 50
PIAGGIO 125: Vespa 125 (da VBN2 a VBN6) • Vespa Primavera • Vespa Primavera ET3 • Vespa Super
PIAGGIO 150: Vespa Super • Vespa 150 (VBA-VBB1-VBB2)
R.O. 150070





142680250

Ø sede contachilometri 82 mm

PIAGGIO 125-150-200: Vespa PX-PE 1° Serie 78-82
R.O. 139829



142680260

Ø sede contachilometri 100 mm

PIAGGIO 80: Vespa PX
PIAGGIO 125-150-200: Vespa PXE Arcobaleno 81-97
R.O. 9046005



142680270

Modello senza lampeggiatori | *Model without flashers*
Ø82 mm
PIAGGIO 125-150-200: Vespa PX 1° Serie
R.O. 174014



142680310

Ø sede contachilometri 100 mm
PIAGGIO 125: Vespa PX 98-01 • Vespa PX 11-13 • Vespa PX Euro2 01-07 • Vespa PX 30 Anni 07-08
PIAGGIO 150: Vespa PX 11-15
R.O. 6224306



142680430

Ø sede contachilometri 70 mm
PIAGGIO 50: Vespa PK
PIAGGIO 125: Vespa PK S
R.O. 178933



142680440

Ø sede contachilometri 70 mm
PIAGGIO 50-125: Vespa PK 1° Serie
R.O. 178637



142680450

Ø sede contachilometri 100 mm
PIAGGIO 50-125: Vespa PK XL
R.O. 226730



142680460

PIAGGIO 50: Vespa FL • Vespa FL2 Automatica • Vespa FL2 HP
R.O. 921700



142680470

PIAGGIO 50: Vespa LX 2T Touring 10-13 • Vespa LX 2T 05-13 • Vespa LX 4T 4V Touring 10-13 • Vespa LX 4T 4V 09-13
PIAGGIO 125: Vespa LX 4T 3V ie Touring 12-13 • Vespa LX 4T Eu3 Touring 10-11 • Vespa LX 4T FL 09 • Vespa LX Eu3 06-11 • Vespa LX 05-06
PIAGGIO 150: Vespa LT 4T 3V ie 14 • Vespa LX 4T 3V ie Touring 12-13 • Vespa LX 4T FL 09 • Vespa LX Eu3 06-11 • Vespa LX Touring 10-12 • Vespa LX 05-06
R.O. 652935





142680480

PIAGGIO 300: Vespa GTS
R.O. 1B001185



142680490

PIAGGIO 50: Liberty 4T 00-02 • Liberty 97-05 • Vespa ET2 Iniezione 97-00 • Vespa ET2 97-05 • Vespa ET4 00-05
PIAGGIO 125: Liberty 99-12 • Vespa ET4 96-02
R.O. 4272005



142680503

Modelli freno a tamburo | *Brake drum models*

PIAGGIO: Vespa PX
LML
R.O. 563789



142680513

Modelli freno a disco | *Brake disc models*

PIAGGIO: Vespa PX
LML
R.O. 5637895



142680514

Modelli freno a disco | *Brake disc models*

PIAGGIO: Vespa PX
LML
R.O. 563789





142580011

CONVOGLIATORE - COPRIVOLANO | *AIR CONVEYOR - FLYWHEEL COVER*
Cilindro verticale | *Vertical Cylinder*

MINARELLI - YAMAHA - MBK 50
R.O. 3VLE265300



142580021

CONVOGLIATORE - COPRIVOLANO | *AIR CONVEYOR - FLYWHEEL COVER*
Cilindro orizzontale | *Horizontal Cylinder*

MINARELLI - YAMAHA - MBK 50
R.O. 72105100



142600010

PIAGGIO 50-90: Vespa 50-90
PIAGGIO 125: Vespa Primavera • Vespa Primavera ET3 1° Serie
R.O. 143593



142600011

PIAGGIO 50: Vespa 50 Special (V5A2) <72 • Vespa 50 Elestart (V5A3) <72
R.O. 123222



142600020

PIAGGIO 125-150-200: Vespa PX-PE
R.O. 183779



142600050

PIAGGIO 50: Vespa PK XL • Vespa PK XL Rush
PIAGGIO 125: Vespa PK XL
R.O. 9007005



142600060

PIAGGIO 50: Vespa FL2 • Vespa N • Vespa HP
R.O. 910000



142600070

PIAGGIO 125-150-200: Vespa PXE Arcobaleno
R.O. 9004005





142600080

PIAGGIO 125: Vespa PX T5
R.O. 232893



142600090

PIAGGIO 50: Vespa PK 82-84 • Vespa PK Automatica 84-89
R.O. 219564



142600100

PIAGGIO 50: Vespa ET2 97-05 • Vespa ET2 Iniezione 97-00 • Vespa ET4 00-05
PIAGGIO 125: Vespa ET4 96-02
R.O. 4722005



142600110

PIAGGIO 50: Vespa LX 2T Touring & 30 Km/h 10-13
PIAGGIO 125: Vespa LX 4T Euro3 Touring 10-11
PIAGGIO 150: Vespa LX Touring 10-12
R.O. 6575885



142600120

PIAGGIO 125: Vespa GTS-GTV
PIAGGIO 250: Vespa GT60 Euro3 • Vespa GTS • Vespa GTV
PIAGGIO 300: Vespa GTS
R.O. 621143





142640040

PROFILO SCUDO IN PLASTICA | *LEGSHIELD FRAME PROFILE*
Metallizzato grigio | *Silver colour*

PIAGGIO 125-150-200: Vespa PXE
VNX-VLX-VSX
R.O. 218944



142640050

PROFILO SCUDO IN PLASTICA | *LEGSHIELD FRAME PROFILE*
Colore nero | *Black colour*

PIAGGIO 125: Vespa PXE • Vespa PXE Arcobaleno • Vespa PX T5
R.O. 226097



142640060

PROFILO BORDO SCUDO IN GOMMA | *RUBBER STRIP*
Rotoli da 8 m, nero | *8 m roll, black colour*

PIAGGIO 50-90: Vespa 50-90
PIAGGIO 125: Vespa Primavera ET3
V5A1-V5B1-V5B2-V5SA1-V9A1-VMA2-VMB1-VMX1T



142640070

PROFILO COFANO LATERALE IN GOMMA | *SIDEPANEL RUBBER STRIP*
Rotoli da 12 m, nero | *12 m roll, black colour*

PIAGGIO 125-150-200: Vespa PX • Vespa PXE Arcobaleno
VNX-VLX-VSX-VNX2-VLX2-VSX2



142640080

PROFILO CUPOLINO STANDARD IN GOMMA | *WINDSHIELD RUBBER STRIP*
Rotoli da 12 m, nero | *12 m roll, black colour*



142640090

PROFILO FILTRO ARIA IN GOMMA | *AIR FILTER RUBBER STRIP*
Rotoli da 10 m, nero | *10 m roll, black colour*

PIAGGIO 50-90: Vespa PX • Vespa PE • Vespa PK
PIAGGIO 125: Vespa Primavera ET3 • Vespa PX
PIAGGIO 150-200: Vespa PX
R.O. 058853



142640100

PROFILO SCUDO IN GOMMA | *RUBBER STRIP*
Lunghezza 165 cm, nero | *Length 165 cm, black colour*

PIAGGIO 50-90: Vespa 50-90
PIAGGIO 125: Vespa Primavera ET3
V5A1-V5B1-V5B2-V5SA1-V9A1-VMA2-VMB1-VMX1T



142640101

PROFILO SCUDO | *RUBBER STRIP*
Lunghezza 165 cm, grigio | *Length 165 cm, grey colour*

PIAGGIO 50-90: Vespa 50-90
PIAGGIO 125: Vespa Primavera ET3
V5A1-V5B1-V5B2-V5SA1-V9A1-VMA2-VMB1-VMX1T



142640110

PROFILO BAULETTO IN GOMMA | *TOP BOX RUBBER STRIP*
Lunghezza 160 cm, nero | *Length 160 cm, black colour*

PIAGGIO 125-150-200: Vespa PX • Vespa PXE Arcobaleno
VNX-VLX-VSX-VNX2-VLX2-VSX2
R.O. 219165





142640120

PROFILO COFANO LATERALE | *SIDEPANEL RUBBER STRIP*
Lunghezza 110 cm, nero | *Length 110 cm, black colour*

PIAGGIO 125-150-200: Vespa PX • Vespa PXE Arcobaleno
VNX-VLX-VSX-VNX2-VLX2-VSX2
R.O. 196230-196232



142640130

PROFILO SCUDO IN ALLUMINIO | *ALUMINIUM LEGSHIELD FRAME PROFILE*
Tipo originale | *Original type*

PIAGGIO 50-90: Vespa 50-90
PIAGGIO 125: Vespa Primavera • Vespa Primavera ET3
R.O. 070416



142640140

PROFILO PEDANA IN GOMMA | *RUBBER PROFILE FOR FOOTBOARD STRIPS*

PIAGGIO 50-90: Vespa 50-90
PIAGGIO 125: Vespa Primavera ET3
V5A1-V5B1-V5B2-V5SA1-V9A1-VMA2-VMB1-VMX1T



142640150

PROFILO PEDANA IN GOMMA | *RUBBER PROFILE FOR FOOTBOARD STRIPS*

PIAGGIO 150: Vespa Sprint • Vespa GL • Vespa Sprint Veloce • Vespa Super
PIAGGIO 180-200: Vespa Rally
VLA1T-VLB1T-VBC1T-VSD1T-VSE1T
R.O. 94625



142640160

PROFILO PEDANA IN GOMMA | *RUBBER PROFILE FOR FOOTBOARD STRIPS*

PIAGGIO 50-125: Vespa PX • Vespa PE • Vespa PK
VNX-VSX-VLX
R.O. 154778



142640170

PROFILO COFANO | *SIDEPANEL RUBBER SCRIPT*
Lunghezza 3 m, grigio | *Length 3 m, silver colour*

PIAGGIO 150: Vespa GS
VS1-VS2-VS3-VS4-VS5
R.O. 011751



142640180

PROFILO SCUDO DESTRO | *RIGHT LEGSHIELD FRAME PROFILE*

PIAGGIO 125: Vespa Granturismo Eu3 06-07 • Vespa Granturismo 03-07 • Vespa GTS 4T ie Super 09-04 • Vespa GTS Eu3 07-12 • Vespa GTV 4T Navy Eu3 08 • Vespa GTV 06-08
PIAGGIO 200: Vespa GT Granturismo 06-07
PIAGGIO 250: Vespa GT 60 Eu3 06-07 • Vespa GTS ABS 05-12 • Vespa GTS 05-13 • Vespa GTV 4T Navy Eu3 07 • Vespa GTV 05-09
PIAGGIO 300: Vespa GTS ie Touring 11-12 • Vespa GTS ie 12-14 • Vespa GTS Super Sport 10-13 • Vespa GTS Super 08-14 • Vespa GTV 4T 4V ie 10-13 • Vespa GTV Via Montenapoleone 10
R.O. 577181



142640190

PROFILO SCUDO SINISTRO | *LEFT LEGSHIELD FRAME PROFILE*

PIAGGIO 125: Vespa Granturismo Eu3 06-07 • Vespa Granturismo 03-07 • Vespa GTS 4T ie Super 09-04 • Vespa GTS Eu3 07-12 • Vespa GTV 4T Navy Eu3 08 • Vespa GTV 06-08
PIAGGIO 200: Vespa GT Granturismo 06-07
PIAGGIO 250: Vespa GT 60 Eu3 06-07 • Vespa GTS ABS 05-12 • Vespa GTS 05-13 • Vespa GTV 4T Navy Eu3 07 • Vespa GTV 05-09
PIAGGIO 300: Vespa GTS ie Touring 11-12 • Vespa GTS ie 12-14 • Vespa GTS Super Sport 10-13 • Vespa GTS Super 08-14 • Vespa GTV 4T 4V ie 10-13 • Vespa GTV Via Montenapoleone 10
R.O. 577180



142640200

PROFILO SCUDO DESTRO | *RIGHT LEGSHIELD FRAME PROFILE*

PIAGGIO 50: Vespa LX 2T Touring & 30 Km 10-13 • Vespa LX 2T 05-08 • Vespa LX 2T 09-13 • Vespa LX 4T-4V Touring 10-13 • Vespa LX 4T-4V 09-13 • Vespa LX 4T 05-08 • Vespa LXV 2T Navy 08 • Vespa LXV 2T 06-09 • Vespa S 2T & college 07-12 • Vespa S 4T 4V & College 08-12
PIAGGIO 125: Vespa LX 4T 3V ie Touring 12-13 • Vespa LX 4T Eu3 Touring 10-11 • Vespa LX 4T FL 09 • Vespa LX Eu3 ie 09-11 • Vespa LX Eu3 06-08 • Vespa LX 05-06 • Vespa LXV 4T Eu3 06-09 • Vespa LXV 4T Navy Eu3 07-08 • Vespa LXV ie 4T 10-13 • Vespa S 4T 3V ie 12 • Vespa S 4T Eu3 07-08 • Vespa S 4T ie & College 09-11
PIAGGIO 150: Vespa LX 4T 3V ie Touring 12-13 • Vespa LX 4T FL 09 • Vespa LX Eu3 ie 09-11 • Vespa LX Eu3 06-08 • Vespa LX Touring 10-12 • Vespa LX 05-06 • Vespa S 4T ie & College 09-12 • Vespa S 4T 08-09
R.O. 622188



142640210

PROFILO SCUDO SINISTRO | *LEFT LEGSHIELD FRAME PROFILE*

PIAGGIO 50: Vespa LX 2T Touring & 30 Km 10-13 • Vespa LX 2T 05-08 • Vespa LX 2T 09-13 • Vespa LX 4T-4V Touring 10-13 • Vespa LX 4T-4V 09-13 • Vespa LX 4T 05-08 • Vespa LXV 2T Navy 08 • Vespa LXV 2T 06-09 • Vespa S 2T & college 07-12 • Vespa S 4T 4V & College 08-12
PIAGGIO 125: Vespa LX 4T 3V ie Touring 12-13 • Vespa LX 4T Eu3 Touring 10-11 • Vespa LX 4T FL 09 • Vespa LX Eu3 ie 09-11 • Vespa LX Eu3 06-08 • Vespa LX 05-06 • Vespa LXV 4T Eu3 06-09 • Vespa LXV 4T Navy Eu3 07-08 • Vespa LXV ie 4T 10-13 • Vespa S 4T 3V ie 12 • Vespa S 4T Eu3 07-08 • Vespa S 4T ie & College 09-11
PIAGGIO 150: Vespa LX 4T 3V ie Touring 12-13 • Vespa LX 4T FL 09 • Vespa LX Eu3 ie 09-11 • Vespa LX Eu3 06-08 • Vespa LX Touring 10-12 • Vespa LX 05-06 • Vespa S 4T ie & College 09-12 • Vespa S 4T 08-09
R.O. 622187



142640220

PROFILO SCUDO IN GOMMA | *RUBBER LEGSHIELD FRAME PROFILE*

PIAGGIO 50: Vespa PK • Vespa PK XL • Vespa FL
R.O.256938

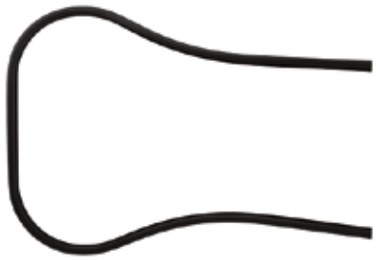

142670010

TAPPETINO CENTRALE IN GOMMA | *CENTRAL RUBBER MAT*

PIAGGIO 125: Vespa 125 >62 • Vespa Super • Vespa GTR
PIAGGIO 150: Vespa 150 >59 • Vespa Sprint • Vespa Super
PIAGGIO 160: Vespa GS 62-64
PIAGGIO 180-200: Vespa Rally
R.O. 085072



142670020

TAPPETINO CENTRALE IN GOMMA | *CENTRAL RUBBER MAT*

PIAGGIO 125-150-200: Vespa PX 1° Serie
R.O. 180052



142670030

TAPPETINO CENTRALE IN GOMMA | *CENTRAL RUBBER MAT*

PIAGGIO 125: Vespa Primavera ET3
R.O. 100445



142670040

TAPPETINO IN GOMMA | *RUBBER MAT*

PIAGGIO 50-90: Vespa 50-90
PIAGGIO 125: Vespa Primavera
R.O. 610303M



142670050

TAPPETINO IN GOMMA | *RUBBER MAT*

PIAGGIO 125: Vespa Primavera ET3



142670060

TAPPETINO IN GOMMA | *RUBBER MAT*

PIAGGIO 125-150-200: Vespa PX • Vespa PXE Arcobaleno
R.O. 437941



142670070

TAPPETINO IN GOMMA | *RUBBER MAT*

PIAGGIO 50-125: Vespa PK



142670080

TAPPETINO IN GOMMA | *RUBBER MAT*

PIAGGIO 50-125: Vespa PK XL



142670090

TAPPETINO IN GOMMA | *RUBBER MAT*

PIAGGIO: Vespa Sprint
R.O. 610304M



142670100

TAPPETINO IN GOMMA | *RUBBER MAT*

LAMBRETTA: Li • DL



142670120

TAPPETINO IN GOMMA | *RUBBER MAT*

PIAGGIO: Vespa Sprint



142670130

TAPPETINO CENTRALE IN PLASTICA | *CENTRAL PLASTIC MAT*

PIAGGIO 125: Vespa PX T5
VNX5T
R.O. 226093



142670150

COPPIA TAPPETINI | *RUBBER MAT PAIR*

PIAGGIO 50: Vespa FL2 Automatica • Vespa N • Vespa PK XL Plurimatic • Vespa PK XL Rush • Vespa PK XL
PIAGGIO 125: Vespa PK XL
R.O. 498463



142680300

TAPPETINO CENTRALE IN PLASTICA | *CENTRAL PLASTIC MAT*

PIAGGIO 50: Vespa PK • Vespa PK XL • Vespa PK XL Rush
V5X3
R.O. 253014



142720040

SCUDETTO ANTERIORE | *FRONT SHIELD*
Esagono 26 mm | *Hexagon 26 mm*
Confezione 5 Pz. | *5 Pcs Packing*
R.O. 152280



142720100

SCUDETTO ANTERIORE | *FRONT SHIELD*
Esagono 31 mm | *Hexagon 31 mm*
Confezione 5 Pz. | *5 Pcs Packing*
R.O. 149876



142720110

SCUDETTO ANTERIORE | *FRONT SHIELD*
Esagono 42 mm | *Hexagon 42 mm*
Confezione 5 Pz. | *5 Pcs Packing*
R.O. 152290



142720430

SCUDETTO ANTERIORE | *FRONT SHIELD*
Scudetto rettangolare | *Rectangular shield*
Confezione 5 Pz. | *5 Pcs Packing*
R.O. 080349



142720080

SCUDETTO RESINATO ADESIVO PIAGGIO PER CALANDRA STERZO | *STEERING COVER PIAGGIO ADHESIVE RESINED SHIELD*
Esagono 27 mm | *Hexagon 27 mm*
Confezione 5 Pz. | *5 Pcs Packing*
R.O. 295596



142720020

SCUDETTO RESINATO ADESIVO PIAGGIO PER CALANDRA STERZO | *STEERING COVER PIAGGIO ADHESIVE RESINED SHIELD*
Confezione 5 Pz. | *5 Pcs Packing*
R.O. 295486



142720050

SCUDETTO RESINATO PER SCUDO ANTERIORE | *PIAGGIO RESINED FRONT SHIELD*
Esagono 32 mm | *Hexagon 32 mm*
R.O. 574771



142720500

SCUDETTO ANTERIORE | *FRONT SHIELD*

PIAGGIO 125-150: Vespa PX Millennium • Vespa PX '11
R.O. 576464



142720220

TARGHETTA SCUDO ANTERIORE | *FRONT SHIELD NAMEPLATE*
R.O. 610288M



142720240

TARGHETTA SCUDO ANTERIORE | *FRONT SHIELD NAMEPLATE*

R.O. 151727



142720250

TARGHETTA SCUDO ANTERIORE | *FRONT SHIELD NAMEPLATE*



142720290

TARGHETTA SCUDO ANTERIORE | *FRONT SHIELD NAMEPLATE*

R.O. 141345



142720330

TARGHETTA SCUDO ANTERIORE | *FRONT SHIELD NAMEPLATE*

R.O. 90556



142720310

TARGHETTA SCUDO ANTERIORE | *FRONT SHIELD NAMEPLATE*

R.O. 151713



142720340

TARGHETTA SCUDO ANTERIORE | *FRONT SHIELD NAMEPLATE*

R.O. 90496



142720160

TARGHETTA SCUDO ANTERIORE | *FRONT SHIELD NAMEPLATE*

R.O. 577082



142720400

TARGHETTA SCUDO ANTERIORE | *FRONT SHIELD NAMEPLATE*

R.O. 121080



142720380

TARGHETTA SCUDO ANTERIORE | *FRONT SHIELD NAMEPLATE*



142720170

TARGHETTA SCUDO ANTERIORE | *FRONT SHIELD NAMEPLATE*

Interasse perni 80 mm | *Pin distance 80 mm*

R.O. 152541



142720180

TARGHETTA SCUDO ANTERIORE | *FRONT SHIELD NAMEPLATE*

R.O. 197601



142720520

TARGHETTA SCUDO ANTERIORE | *FRONT SHIELD NAMEPLATE*

PIAGGIO 125: Vespa GTR
VNL2T
R.O. 151716



142720640

TARGHETTA SCUDO ANTERIORE | *FRONT SHIELD NAMEPLATE*

PIAGGIO 50-125: Vespa PK
V5X1T-VMX1T
R.O. 195629



142720850

TARGHETTA SCUDO ANTERIORE | *FRONT SHIELD NAMEPLATE*

PIAGGIO 160: Vespa GS
VSB1
R.O. 057182



142720870

TARGHETTA SCUDO ANTERIORE | *FRONT SHIELD NAMEPLATE*
Lunghezza 165 mm | *Length 165 mm*

PIAGGIO 150: Vespa GL
VLA1T-VGLB1T-VGL1T
R.O. 094793



142720900

TARGHETTA SCUDO ANTERIORE | *FRONT SHIELD NAMEPLATE*

PIAGGIO 125: Vespa 60-66
VNB1-VNB2-VNB3
R.O. 086325



142720880

TARGHETTA SCUDO ANTERIORE | *FRONT SHIELD NAMEPLATE*
Colore blu | *Blue colour*

PIAGGIO 150: Vespa GL
VLA1T-VGLB1T-VGL1T
R.O. 094793



142720920

TARGHETTA SCUDO ANTERIORE | *FRONT SHIELD NAMEPLATE*
Colore verde | *Green colour*

PIAGGIO 125: Vespa 125
VN1T-VN2-VNA1
R.O. 023659



142720930

TARGHETTA SCUDO ANTERIORE | *FRONT SHIELD NAMEPLATE*
Colore blu | *Blue colour*

PIAGGIO 125: Vespa 125
VN1T-VN2-VNA1
R.O. 023669



142720810

TARGHETTA SCUDO ANTERIORE | *FRONT SHIELD NAMEPLATE*

PIAGGIO 50: Vespa 50 Elestart • Vespa L • Vespa N • Vespa R
V5A1T-V5A3T
R.O. 090944



142720820

TARGHETTA SCUDO ANTERIORE | *FRONT SHIELD NAMEPLATE*

PIAGGIO 150: Vespa 150
VBA-VBB
R.O. 084809



142720830

TARGHETTA SCUDO ANTERIORE | *FRONT SHIELD NAMEPLATE*

PIAGGIO 150: Vespa GS
VS1-VS2-VS3-VS4-VS5
R.O. 023902



142720840

TARGHETTA SCUDO ANTERIORE | *FRONT SHIELD NAMEPLATE*

PIAGGIO 150: Vespa GS
VS1-VS2-VS3-VS4-VS5
R.O. 023902



142720860

TARGHETTA SCUDO ANTERIORE | *FRONT SHIELD NAMEPLATE*

PIAGGIO 150: Vespa GL
VS1
R.O. 094793



142720910

TARGHETTA SCUDO ANTERIORE | *FRONT SHIELD NAMEPLATE*

PIAGGIO 125: Vespa 125
VN1T-VN2-VNA1
R.O. 023659



142720980

TARGHETTA SCUDO ANTERIORE | *FRONT SHIELD NAMEPLATE*

PIAGGIO 125-150-200: Vespa PX Arcobaleno
VNX2-VLX2-VSX2
R.O. 194955



142721200

TARGHETTA SCUDO ANTERIORE | *FRONT SHIELD NAMEPLATE*

PIAGGIO 50: Vespa S 4T 4V
PIAGGIO 125: Vespa GTS 4T ie Super • Vespa S 4T 3V ie
PIAGGIO 300: Vespa GTS Super Sport
R.O. 672060



142721190

TARGHETTA SCUDO ANTERIORE | *FRONT SHIELD NAMEPLATE*

PIAGGIO 150: Vespa Sprint-Super-Rally
VLB1T-VBC1T-VSC1T
R.O. 91888



142720440

TARGHETTA CALANDRA ANTERIORE | *FRONT COVER NAMEPLATE*

PIAGGIO 125-150-200: Vespa PX 1° serie
R.O. 181329



142720450

TARGHETTA CALANDRA ANTERIORE | *FRONT COVER NAMEPLATE*

PIAGGIO 125-150-200: Vespa PXE Arcobaleno • Vespa PX T5
R.O. 232895



142720320

TARGHETTA POSTERIORE | *REAR NAMEPLATE*
R.O. 121012



142720350

TARGHETTA POSTERIORE | *REAR NAMEPLATE*
R.O. 151715



142720270

TARGHETTA POSTERIORE | *REAR NAMEPLATE*
R.O. 90653



142720280

TARGHETTA POSTERIORE | *REAR NAMEPLATE*
R.O. 121081



142720410

TARGHETTA POSTERIORE | *REAR NAMEPLATE*
R.O. 151714



142720300

TARGHETTA POSTERIORE | *REAR NAMEPLATE*
R.O. 90653



142720360

TARGHETTA POSTERIORE | *REAR NAMEPLATE*
R.O. 126072



142720370

TARGHETTA POSTERIORE | *REAR NAMEPLATE*
R.O. 100042



142720260

TARGHETTA POSTERIORE | *REAR NAMEPLATE*
R.O. 150498



142720420

TARGHETTA POSTERIORE | *REAR NAMEPLATE*
R.O. 120792



142720540

TARGHETTA POSTERIORE | *REAR NAMEPLATE*
PIAGGIO 50: Vespa S
V5A1
R.O. 152510



142720550

TARGHETTA POSTERIORE | *REAR NAMEPLATE*
PIAGGIO 50: Vespa 50 Special
V5B3T
R.O. 152511



142721270

TARGHETTA POSTERIORE | *REAR NAMEPLATE*
PIAGGIO 125: Vespa PK XL Rush
V5X4T
R.O. 229276



142720570

TARGHETTA POSTERIORE | *REAR NAMEPLATE*
PIAGGIO 200: Vespa Rally
VSE1T
R.O. 152515



142720580

TARGHETTA POSTERIORE | *REAR NAMEPLATE*
PIAGGIO 125: Vespa Primavera ET3
VMB1
R.O. 158562



142720530

TARGHETTA POSTERIORE | *REAR NAMEPLATE*
PIAGGIO 50: Vespa R
V5A1
R.O. 152509



142720950

TARGHETTA POSTERIORE | *REAR NAMEPLATE*
PIAGGIO 125: Vespa Primavera
VMA2
R.O. 145340



142721020

TARGHETTA POSTERIORE | *REAR NAMEPLATE*
PIAGGIO 125: Vespa TS
VNL3T
R.O. 156202



142720510

TARGHETTA POSTERIORE | *REAR NAMEPLATE*
PIAGGIO 90: Vespa 90
V9A1
R.O. 145341



142720960

TARGHETTA POSTERIORE | *REAR NAMEPLATE*
PIAGGIO 150: Vespa Sprint Veloce
VLB1T
R.O. 145342



142720970

TARGHETTA POSTERIORE | *REAR NAMEPLATE*
PIAGGIO 50: Vespa Elestart
V5B4T
R.O. 152512



142720470

ETICHETTA MISCELA 2% | *2% FUEL MIXTURE LABEL*
Confezione 10 Pz. | *10 Pcs Packing*
R.O. 610054M003



142720480

ETICHETTA MISCELA 2% | *2% FUEL MIXTURE LABEL*
Confezione 10 Pz. | *10 Pcs Packing*
R.O. 610054M00R



142720490

ETICHETTA MISCELA 5% | *5% FUEL MIXTURE LABEL*
Confezione 10 Pz. | *10 Pcs Packing*
R.O. 61 0054M001



142721030

ETICHETTA RODAGGIO ROSSA | *RUNNING RED LABEL*

PIAGGIO 150: Vespa GS
R.O. 610292M



142721040

ETICHETTA RODAGGIO ROSSA | *RUNNING RED LABEL*
Confezione 10 Pz. | *10 Pcs Packing*

PIAGGIO 180: Vespa Rally
R.O. 610170M



142721050

ETICHETTA RODAGGIO ROSSA | *RUNNING RED LABEL*

PIAGGIO 50-90: Vespa 50-90
R.O. 610170M002



142721060

ETICHETTA RODAGGIO BLU | *RUNNING BLUE LABEL*
Confezione 10 Pz. | *10 Pcs Packing*

PIAGGIO 180: Vespa Rally
R.O. 610170M001



142721070

ETICHETTA RODAGGIO BLU | *RUNNING BLUE LABEL*
Confezione 10 Pz. | *10 Pcs Packing*

PIAGGIO 50-90: Vespa 50-90
R.O. 610170M003



142721080

ETICHETTA BENZINA | *FUEL LABEL*



142721230

TARGHETTA NON OSTRUIRE IL FORO ROSSA | *RED LABEL*
Confezione 4 Pz. | *4 Pcs Packing*
R.O. 610176M



142721240

TARGHETTA NON OSTRUIRE IL FORO BLU | *BLU LABEL*
Confezione 4 Pz. | *4 Pcs Packing*
R.O. 610176M0001



142720150

TARGHETTA COFANO LATERALE | *SIDE PANEL NAMEPLATE*

R.O. 577081



142720190

TARGHETTA COFANO LATERALE | *SIDE PANEL NAMEPLATE*
R.O. 575795



142720200

TARGHETTA COFANO LATERALE | *SIDE PANEL NAMEPLATE*
R.O. 575796



142720460

TARGHETTA COFANO LATERALE | *SIDE PANEL NAMEPLATE*
PIAGGIO 150: Vespa PX
R.O. 656220



142720600

TARGHETTA COFANO LATERALE | *SIDE PANEL NAMEPLATE*
PIAGGIO 200: Vespa PE
VSX
R.O. 181328



142720610

TARGHETTA COFANO LATERALE | *SIDE PANEL NAMEPLATE*
PIAGGIO 150: Vespa PX
VLX
R.O. 182117



142720620

TARGHETTA COFANO LATERALE | *SIDE PANEL NAMEPLATE*
PIAGGIO 125: Vespa PXE
VNX
R.O. 194717



142720630

TARGHETTA COFANO LATERALE | *SIDE PANEL NAMEPLATE*
PIAGGIO 150: Vespa PXE
VLX
R.O. 194718



142720670

TARGHETTA COFANO LATERALE | *SIDE PANEL NAMEPLATE*
PIAGGIO 125: Vespa PK S
VMX1T
R.O. 195635



142720680

TARGHETTA COFANO LATERALE | *SIDE PANEL NAMEPLATE*
PIAGGIO 200: Vespa PXE
VSX
R.O. 195641



142720660

TARGHETTA COFANO LATERALE | *SIDE PANEL NAMEPLATE*
PIAGGIO 125: Vespa PK
VMX1T
R.O. 195634



142720690

TARGHETTA COFANO LATERALE | *SIDE PANEL NAMEPLATE*
PIAGGIO 50: Vespa Elestart
V5B2T
R.O. 196459



142720700

TARGHETTA COFANO LATERALE | *SIDE PANEL NAMEPLATE*
PIAGGIO 125: Vespa PX E Elestart
VNX2
R.O. 198179



142720710

TARGHETTA COFANO LATERALE | *SIDE PANEL NAMEPLATE*
PIAGGIO 125: Vespa PXE Arcobaleno
VNX2
R.O. 198181



142720720

TARGHETTA COFANO LATERALE | *SIDE PANEL NAMEPLATE*
PIAGGIO 150: Vespa PXE Arcobaleno
VLX2
R.O. 198182



142720730

TARGHETTA COFANO LATERALE | *SIDE PANEL NAMEPLATE*
PIAGGIO 200: Vespa PXE Arcobleno
VSX2
R.O. 198183



142720740

TARGHETTA COFANO LATERALE | *SIDE PANEL NAMEPLATE*
PIAGGIO 125: Vespa T5
VNX5T
R.O. 241316



142720750

TARGHETTA COFANO LATERALE | *SIDE PANEL NAMEPLATE*
PIAGGIO 125-150-200: Cosa
VLR1T-VLR-VSR1
R.O. 254293



142720760

TARGHETTA COFANO LATERALE | *SIDE PANEL NAMEPLATE*
PIAGGIO 50: Vespa N
V5A1T
R.O. 256452



142720780

TARGHETTA COFANO LATERALE | *SIDE PANEL NAMEPLATE*
PIAGGIO 80: Vespa PXE
V8X5T
R.O. 198180



142720940

TARGHETTA COFANO LATERALE | *SIDE PANEL NAMEPLATE*
INNOCENTI 125-150-200: Lambretta LI 3° serie
R.O. 19955051



142720590

TARGHETTA COFANO LATERALE | *SIDE PANEL NAMEPLATE*
PIAGGIO 125: Vespa PX
VNX
R.O. 181327



142720650

TARGHETTA COFANO LATERALE | *SIDE PANEL NAMEPLATE*
PIAGGIO 50: Vespa PK S
V5X1T
R.O. 195631



142720770

TARGHETTA COFANO LATERALE | *SIDE PANEL NAMEPLATE*
PIAGGIO 150: Vespa PK S
VBX
R.O. 182895



142720790

TARGHETTA COFANO LATERALE | *SIDE PANEL NAMEPLATE*
PIAGGIO 150: Vespa PX E Elestart
VLX2
R.O. 198657



142720800

TARGHETTA COFANO LATERALE | *SIDE PANEL NAMEPLATE*
PIAGGIO 200: Vespa PX E Elestart
VSX2
R.O. 198658



142720990

TARGHETTA COFANO LATERALE | *SIDE PANEL NAMEPLATE*
PIAGGIO 50: Vespa PK
V5X1T
R.O. 195630



142721000

TARGHETTA COFANO LATERALE | *SIDE PANEL NAMEPLATE*
PIAGGIO 80: Vespa PK S Elestart
V5X2T
R.O. 198199



142721140

TARGHETTA COFANO LATERALE | *SIDE PANEL NAMEPLATE*
PIAGGIO 125: Vespa PX E Lusso
R.O. 199362



142721150

TARGHETTA COFANO LATERALE | *SIDE PANEL NAMEPLATE*
PIAGGIO 150: Vespa PX E Lusso
R.O. 199363



142721180

TARGHETTA COFANO LATERALE | *SIDE PANEL NAMEPLATE*
PIAGGIO 200: Vespa PX E Elestart Lusso
R.O. 199366



142721010

TARGHETTA COFANO LATERALE | *SIDE PANEL NAMEPLATE*
PIAGGIO 100: Vespa PK S Elestart
V9X1T
R.O. 198201



142721110

TARGHETTA COFANO LATERALE | *SIDE PANEL NAMEPLATE*
PIAGGIO 125-150: Vespa PX
R.O. 656219



142721120

TARGHETTA COFANO LATERALE | *SIDE PANEL NAMEPLATE*
PIAGGIO 200: Vespa PX 98-11
VSX1T
R.O. 575797



142721130

TARGHETTA COFANO LATERALE | *SIDE PANEL NAMEPLATE*
PIAGGIO 80: Vespa PX E Lusso
R.O. 199361



142721160

TARGHETTA COFANO LATERALE | *SIDE PANEL NAMEPLATE*
PIAGGIO 200: Vespa PX E Lusso
R.O. 199364



142721170

TARGHETTA COFANO LATERALE | *SIDE PANEL NAMEPLATE*
PIAGGIO 80: Vespa PX E Elestart Lusso
R.O. 199365



142721210

TARGHETTA COFANO LATERALE | *SIDE PANEL NAMEPLATE*
PIAGGIO 50: Vespa S 4T 4V • Vespa S 2T
PIAGGIO 125: Vespa GTS 4T ie Super • Vespa S 4T 3V ie
PIAGGIO 300: Vespa GTS Super Sport
R.O. 672061



142721220

TARGHETTA COFANO LATERALE | *SIDE PANEL NAMEPLATE*
PIAGGIO 50: Vespa LX 2T Touring 10-13 • Vespa LX 2T 05-13 • Vespa LX 4T 4V 10-13 • Vespa LX 4T 05-08
R.O. 656221



142721250

TARGHETTA COFANO LATERALE | *SIDE PANEL NAMEPLATE*
PIAGGIO 150: Vespa GS (Mercato tedesco - *German market*)
R.O. 226542



142721260

TARGHETTA COFANO LATERALE | *SIDE PANEL NAMEPLATE*

PIAGGIO 50: Ciao
R.O. 163966



121850010

MOLLETTA FISSAGGIO TARGHETTA | *PLATE FIXING SPRING*
Confezione 100 Pz. | *100 Pcs Packing*

PIAGGIO: Vespa (vari modelli - *various model*)
R.O. 008108



142721090

SERIE FREGI | *DECORATIVE TRIMS*

PIAGGIO 200: Vespa Rally
V5E1T
R.O. 610193M



142721100

SERIE FREGI | *DECORATIVE TRIMS*

PIAGGIO 125: Vespa ET3
VMB
R.O. 610194M



142700010

PORTATARGA EUROPEO | *PLATE HOLDER*
In nylon antiurto predisposto per il montaggio su tutte le moto e scooter | *Nylon material, suitable for all motorcycle and scooter models*

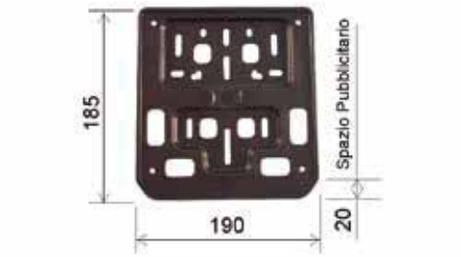

142700040

PORTATARGA EUROPEO | *PLATE HOLDER*
Per Ciclomotori e Scooter 50 cc | *50 cc applications*

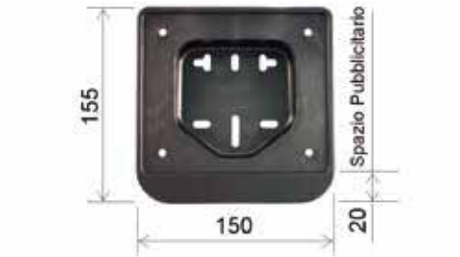

142700390

PORTATARGA EUROPEO IN ACCIAIO | *STEEL PLATE HOLDER*

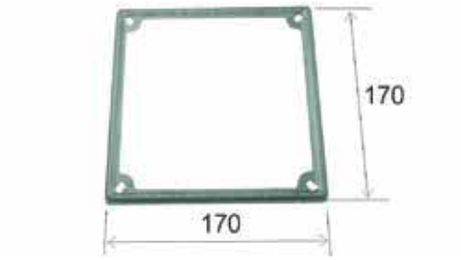

142700400 NEW

PORTATARGA EPOCA ACCIAIO NERO | *BLACK STEEL PLATE HOLDER*



142560050

SACCA PORTATUTTO | *TOOLBOX*

PIAGGIO 50-125: Vespa PK • Vespa FL • Vespa HP • Vespa Rush • Vespa N
R.O. 219383



142560030

SACCA PORTATUTTO | *TOOLBOX*

PIAGGIO 50-90: Vespa
PIAGGIO 125: Vespa Primavera • Vespa Primavera ET3
R.O. 100389



142560143

PORTAOGGETTI | *STORAGE*

PIAGGIO 125: Vespa T5
R.O. 233112



142680170

PARASPRUZZO | *SPLASH GUARD*

PIAGGIO: Vespa (vari modelli - *various model*)
R.O. 610062M



142680280

PARASPRUZZO ANTERIORE | *FRONT SPLASH GUARD*

PIAGGIO 50: Vespa FL2
V5N1
R.O. 266308



142680290

PARASPRUZZO POSTERIORE | *REAR SPLASH GUARD*

PIAGGIO 50: Vespa FL2
V5N1
R.O. 256940



142680420

PARASPRUZZO | *SPLASH GUARD*
Confezione 5 Pz. | *5 Pcs Packing*

PIAGGIO 50: Si FL2
R.O. 269208



142680560

PARASPRUZZO | *SPLASH GUARD*

PIAGGIO 50-125: Vespa PK XL
R.O. 9044005



142740130

MANIGLIA IN PLASTICA PER PORTA LATERALE | *HANDLE LATERAL DOOR*
Confezione 10 Pz. | *10 Pcs Packing*

PIAGGIO 50: Ape
R.O. 255813





142680720

PARACOLPI ANTERIORE SINISTRO | *FRONT LEFT BUFFER*

PIAGGIO 50: Liberty 2T 04-08 • Liberty 4T 05-17
PIAGGIO 125: Liberty 4T 04-18
PIAGGIO 150-200: Liberty 4T
R.O. CM0200020043



142680730

PARACOLPI ANTERIORE DESTRO | *FRONT RIGHT BUFFER*

PIAGGIO 50: Liberty 2T 04-08 • Liberty 4T 05-17
PIAGGIO 125: Liberty 4T 04-18
PIAGGIO 150-200: Liberty 4T
R.O. CM0200020043



142560090

COPPIA COPERTURE LATERALI COPRIMOTORE | *COUPLE PROTECTION FRAME*

PIAGGIO 50: Si FL2
R.O. 497488



142560100

COPPIA COPERTURE LATERALI | *COUPLE COVERS*

PIAGGIO: Ciao FL
Modelli con variatore - *CVT Models*



142680770

COPPIA COPERTURE LATERALI | *COUPLE COVERS*

PIAGGIO: Ciao FL
Modelli senza variatore - *No CVT Models*



142560150

COPPIA POGGIAPIEDI NERI | *BLACKFLOOR BOARD COUPLE*

PIAGGIO 50: Si • Si FL2
R.O. 228989



142600200

GRIGLIA CALANDRA | *HORN COVER GRID*
Cromata | *Chromed*

PIAGGIO 125-150: Vespa PX
Modello con freno a disco - *Brake disc model*
VNX2T-VLX1-VSX1T
R.O. 564221



142600201

GRIGLIA PER CALANDRA VESPA | *HORN COVER GRID*
Nera | *Black*

PIAGGIO 125-150-200: Vespa PXE Arcobaleno
VNX2-VLX2-V5X2
R.O.219119



142600300

142600303

GRIGLIA PER CALANDRA VESPA | *HORN COVER GRID*
Nera | *Black*

PIAGGIO 125: Vespa T5
VNX5
R.O. 232894





142620040

142620042 NEW

COPERCHIO MOZZO ALLUMINIO | *ALUMINIUM HUB COVER*

PIAGGIO 50-90-125: Vespa Primavera ET3
V5A1-V5B1-V5B2-V5SA1-V9A1-VMA2-VMB1-VMX1T
R.O. 070177



142620050

COPERCHIO PLASTICA GRIGIO | *GREY PLASTIC HUB COVER*
Confezione 5 Pz. | *5 Pcs Packing*

PIAGGIO 125: Vespa PX 2° Serie • Vespa PXE Arcobaleno • Vespa PX T5
PIAGGIO 150: Cosa
R.O. 178048



142620051

COPERCHIO PLASTICA NERO | *BLACK PLASTIC HUB COVER*
Confezione 5 Pz. | *5 Pcs Packing*

PIAGGIO 125: Vespa PX 2° Serie • Vespa PXE Arcobaleno • Vespa PX T5
PIAGGIO 150: Cosa
R.O. 178048



142680090

PROTEZIONE POSTERIORE SCOCCA | *REAR FRAME PROTECTION*

PIAGGIO 125: Vespa PX • Vespa PXE Arcobaleno
R.O. 219110



142680160

PROTEZIONE POSTERIORE SCOCCA | *REAR FRAME PROTECTION*

PIAGGIO 125-150-200: Vespa PXE
VNX2-VLX2-VSX2
R.O. 219110



142680190

PROTEZIONE SCOCCA | *REAR FRAME PROTECTION*

PIAGGIO 125: Vespa PX 11-15 • Vespa PX 98-01 • Vespa PX Eu2 01-07 • Vespa PX 30 Anni 07-08
PIAGGIO 150: Vespa PX 11-15
R.O. 5769690090



142680540

PORTELLO BAULETTO | *GLOVEBOX DOOR*

PIAGGIO 50-125: Vespa PK
VA51T-VAM1T
R.O. 216467



142680550

PULSANTE PORTELLO | *BUTTON GLOVE BOX*

PIAGGIO 50-125: Vespa PK
VA51T-VAM1T
R.O. 216624



142560170

PEDANA | *FOOTREST*

PIAGGIO 50: Ciao
R.O. 188128





267200610

SPAZZOLA TERGICRISTALLO | *WINDSHIELD WIPER*
Lunghezza 380 mm | *Length 380 mm*
Confezione 6 Pz. | *6 Pcs Packing*

PIAGGIO 50: Ape Mix 2T 98-08
PIAGGIO 220: Ape MP P501-P601 78-96 • Ape TM P602 82-83 • Ape TM P703-P703V FL2 84-05
PIAGGIO 420: Ape Poker Benzina 93 • Ape Poker Diesel 93-97 • Ape TM P703-P703V Diesel 87-04
R.O. 438013



267200690

SPAZZOLA TERGICRISTALLO | *WINDSHIELD WIPER*
Lunghezza 406 mm | *Length 406 mm*
Confezione 6 Pz. | *6 Pcs Packing*

PIAGGIO 1000: Porter 92-98
PIAGGIO 1200: Porter Diesel 95-00
PIAGGIO 1300: Porter 16V Pick Up 98-09 • Porter 16V Van
PIAGGIO 1400: Porter Pick Diesel 98-05 • Porter Van Diesel 98-05
R.O. 438042





GOMMINI ANTIVIBRANTI

RUBBER PADS

121830420

TUBETTO COFANO | *SIDEPANEL RUBBER TUBE*
Confezione 5 Pz. | *5 Pcs Packing*

PIAGGIO 125-150-200: Vespa PX • Vespa PE
R.O. 024021



121830490

TAMPONE COFANO MOTORE | *SIDEPANEL BUFFER*
Confezione 5 Pz. | *5 Pcs Packing*

PIAGGIO 50-90: Vespa 50-90
PIAGGIO 125: Vespa Primavera ET3
V5A1-V5B1-V5B2-V5SA1-V9A1-VMA2-VMB1
R.O. 232222



121830590

TAMPONE BAULETTO | *RUBBER BUFFER GLOVE BOX*
Confezione 5 Pz. | *5 Pcs Packing*

PIAGGIO 125-150-200: Vespa PX • Vespa PX T5 • PXE
Arcobaleno • Cosa
R.O. 149908



142640543

KIT GOMMINI COFANO | *RUBBER HOOD COWLS KIT*

PIAGGIO 150: Vespa Sprint
VLB1T



142640553

KIT GOMMINI PORTELLO | *RUBBER DOOR KIT*

PIAGGIO 50: Vespa
V5A1T



142640563

KIT GOMMINI PORTELLO | *RUBBER DOOR KIT*

PIAGGIO 50: Vespa 50 Special
V5B3T



142640573

KIT GOMMINI COFANO | *RUBBER COWLS KIT*

PIAGGIO 125-150-200: Vespa PX
VN1T-VLX1T-VSX1T



142640583

KIT GOMMINI COFANO | *RUBBER COWLS KIT*

PIAGGIO 125-150-200: Vespa PX
VN1T-VLX1T-VSX1T





121832000 NEW

HONDA: R.O. 90683GR1003

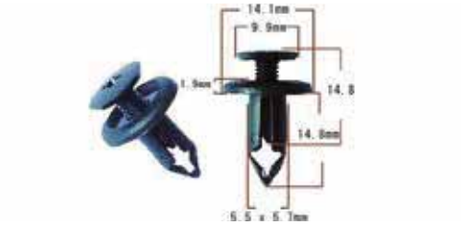

121832001 NEW

HONDA: R.O. 90657SB0003



121832002 NEW

HONDA: R.O. 90685SA5003



121832003 NEW

HONDA: R.O. 90683MBW003
SUZUKI: R.O. 09409-06322-000



121832004 NEW

SUZUKI: R.O. 09409-08308-5ES



121832005 NEW

HONDA: R.O. 90116SP0003
KYMCO: R.O. 00190161
SUZUKI: R.O. 09409-06314-5PK



121832006 NEW

SUZUKI: R.O. 09409-07332-000



121832007 NEW

KAWASAKI: 92039Y003
KYMCO: 00162154
SUZUKI: R.O. 09409-07333-000



121832008 NEW

SUZUKI: R.O. 09409-07344-000

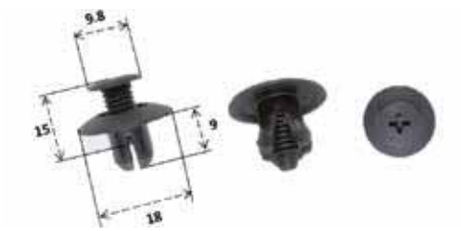

121832009 NEW

YAMAHA: R.O. 902690707600



121832010 NEW

YAMAHA: R.O. 902690707700

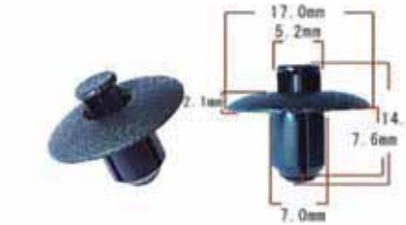

121832011 NEW

HONDA: R.O. 90654MCA000



121832012 NEW

HONDA: R.O. 90666SDAA01



121832013 NEW

HONDA: R.O. 90683GAZ003



121832014 NEW

HONDA: R.O. 90687SB0013

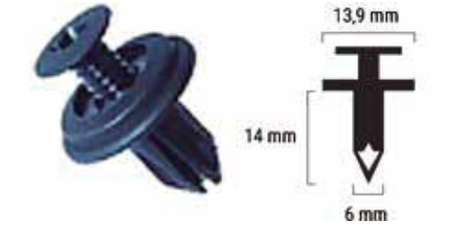

121832015 NEW

HONDA: R.O. 90684MBG000



121832016 NEW

SUZUKI: R.O. 09409-07305-5PK



121832017 NEW

SUZUKI: R.O. 09409-06328



121832018 NEW

SUZUKI: R.O. 09409-06317



121832019 NEW

SUZUKI: R.O. 09409-06313





121810073

MANIGLIETTA COFANO | *HOOD HANDLE*

PIAGGIO: Vespa >1958
R.O. 610399M



121830863

GOMMINI COFANO | *RUBBER HOOKS*
Confezione 10 pz. | *10 Pcs Packing*

PIAGGIO 125-150-200: Vespa PX
VNX-VLX-VSX-VNX2-VLX2-VSX2
R.O. 178689



121850370

VITE PARAFANGO | *SCREW MUDGUARD*
Confezione 25 pz. | *25 Pcs Packing*
Tutti i modelli Vespa | *Vespa All models*

PIAGGIO: R.O. 014467



121856100

VITE TESTA CON INSERTO A CROCE PER CARROZZERIA | *BODYWORK SCREW*
Confezione 10 pz. | *10 Pcs Packing*

APRILIA - DERBI - GILERA - PIAGGIO
Vari modelli - *Various models*
R.O. 298086-575249

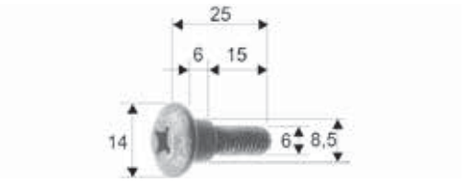

121858490

BULLONE RUOTA DI SCORTA | *BOLT*
Confezione 5 pz. | *5 Pcs Packing*

PIAGGIO 125-150: Vespa PX • Vespa PX T5 • Vespa PXE Arcobaleno
R.O. 159873



121858500

PIASTRINA ELASTICA | *PLATE FIXING PRING*
Confezione 20 pz. | *20 Pcs Packing*

PIAGGIO 125-150-200: Vespa PX • Vespa PXE Arcobaleno
VNX-VLX-VSX-VNX2-VLX2-VSX2
R.O. 181475



121858590

VITE FISSAGGIO RAPIDO mm 34 | *FAST LOCK SCREW mm 34*
Confezione 10 pz. | *10 Pcs Packing*

PIAGGIO 50: Ciao • Si
R.O. 185818



121858600

VITE FISSAGGIO RAPIDO mm 31 | *FAST LOCK SCREW mm 31*
Confezione 10 pz. | *10 Pcs Packing*

PIAGGIO 50: Ciao • Si
R.O. 132871



121890120

MOLLA RITEGNO FIANCATINE | *PROTECTION FRAME SPRING*
Confezione 25 pz. | *25 Pcs Packing*

PIAGGIO 50: Ciao • Si
R.O. 122957





121858610

VITE TESTA PHILIPS ZINCATA M5 X 35 mm | *PHILIPS GALVANIZED SCREW M5 x 35 mm*
Confezione 10 Pz. | *10 Pcs Packing*
Per copri manubrio Vespa PX | *For Vespa PX handlebar*



142660200

COPPIA LISTELLI ACCIAIO INOX | *FLOOR RUNNERS FOR FLOOR MAT*

PIAGGIO 125: Vespa GTR
PIAGGIO 150: Vespa GL • Vespa Sprint • Vespa Super
PIAGGIO 160: Vespa GS 62-64
PIAGGIO 180-200: Vespa Rally
R.O. 085073/74



142660210

COPPIA LISTELLI ACCIAIO INOX | *FLOOR RUNNERS FOR FLOOR MAT*

PIAGGIO 125: Vespa Primavera ET3 • Vespa Primavera
R.O. 100446 (Dx) - 100447 (Sx)



142660220

COPPIA LISTELLI ACCIAIO INOX | *FLOOR RUNNERS FOR FLOOR MAT*

PIAGGIO 125-150-200: Vespa PX
R.O. 180048



142580113

COPRISELETTORE CROMATO | *GEAR BOX CHROMED COVER*

PIAGGIO: Vespa PX • Vespa PE
VNX-VLX-VSX-VNX2-VLX2-VSX2



142600040

MODANATURA CALANDRA | *STEERING MOULDING*

PIAGGIO 50: Vespa 50 Special Elestart
V5B1-V5A3T
R.O. 123576



142700030

PORTABOLLO | *ROAD TAX HOLDER*
Confezione 5 pz. | *5 Pcs Packing*
Vari modelli Vespa | *Various Vespa models*



142740140

CINGHIA FERMA PORTIERA | *SAFETY BELT FOR DOOR*

PIAGGIO 50: Ape
PIAGGIO 200: Ape Car P2-P3 78-85 • Ape MP P501-P601
R.O. 175074



142800030

PARAURTI ANTERIORE | *FRONT BUMPER*
Grigio | *Grey*

PIAGGIO: Vespa PX
LML
R.O. 610272M





142800031

PARAURTI ANTERIORE | *FRONT BUMPER*
Nero | *Black*

PIAGGIO: Vespa PX
LML



246140510

BOCCOLA COLLEGAMENTO | *BUSH CONNECTOR*

PIAGGIO 125: Vespa PX 30 Anni 07-08 • Vespa PX Eu2 01-07 • Vespa PX T5 85-89 • Vespa PX 98-13 • Vespa PXE Arcobaleno 81-97
PIAGGIO 150: Vespa PX 11-17
R.O. 216053



121870040

TAPPO SUL MANUBRIO | *HANDLEBAR COVER PLUG*
Confezione 10 pz. | *10 Pcs Packing*

GILERA 50: Ice 01
PIAGGIO 50: Liberty 97-02 •Liberty 4T 00-02
PIAGGIO 100: Free 02
R.O. 562897



121810063

GANCI COFANO | *COWL HOOKS*

PIAGGIO 125-150-200: Vespa PX
VNX-VLX-VSX-VNX2-VLX2-VSX2
R.O. 227229 - 244093



121810033

GANCIO PORTABORSE NERO | *BLACK BAG HOOK*
Nero | *Black*

PIAGGIO 125: Vespa T5
VNX5T
R.O. 227153



121810030

GANCIO PORTABORSA ZINCATO | *HOOK FOR BAG GALVANIZED*
Tutti i modelli Vespa | *Vespa All models*

PIAGGIO: R.O. 057468



121810050

GANCIO PORTABORSA | *BAG HOOK*

PIAGGIO: Vespa
R.O. 011653



TELAIO
CHASSIS
CHASIS
CHASSIS

Leviers	*Manetas*	*Levers*	**LEVE**	**1098**
Accessoires Leviers	*Accesorios Manetas*	*Levers Accessories*	**ACCESSORI LEVE**	**1181**
Guidons	*Manillares*	*Handlebars*	**MANUBRI**	**1182**
Supports Leviers	*Portamanetas*	*Levers Supports*	**COMANDI PORTALEVA**	**1185**
Poignèes de Gaz	*Mandos Gas*	*Throttles Handles*	**COMANDI GAS**	**1188**
Contrôles Gaz et Changement Vitesse	*Tubos Mandos*	*Throttle and Shift Controls*	**TUBI COMANDO**	**1192**
Accessoires Contrôles	*Accesorios Mandos*	*Controls Accessories*	**ACCESSORI COMANDI**	**1194**
Poignées	*Puños*	*Grips*	**MANOPOLE**	**1197**
Accessoires Poignées	*Accesorios Puños*	*Grips Accessories*	**ACCESSORI MANOPOLE**	**1214**
Béquilles Centrales	*Caballetes Laterales*	*Side Stands*	**CAVALLETTI LATERALI**	**1215**
Béquilles Latérales	*Caballetes Centrales*	*Central Stands*	**CAVALLETTI CENTRALI**	**1226**
Accessoires Béquilles	*Accesorios Caballetes*	*Stands Accessories*	**ACCESSORI CAVALLETTI**	**1241**
Fourches	*Horquillas*	*Forks*	**FORCELLE**	**1245**
Têtes de Fourche	*Cabeza de Horquillas*	*Forks Heads*	**TESTE FORCELLE**	**1246**
Tiges de Fourche	*Tubos de Horquillas*	*Fork Stems*	**STELI FORCELLE**	**1247**
Roulements de Direction	*Cojinetes de Dirección*	*Steering Head Bearing Set*	**SERIE STERZO**	**1248**
Accessoires Roulements de Direction Moto	*Accesorios Cojinetes de Dirección*	*Steering Head Bearing Set Accessories*	**ACCESSORI SERIE STERZO**	**1262**
Compteurs	*Cuentakilómetros*	*Speedometers*	**CONTACHILOMETRI**	**1264**
Accessoires Compteurs	*Accesorios Cuentakilómetros*	*Speedometers Accessories*	**ACCESSORI CONTACHILOMETRI**	**1267**
Pignons Compteurs Vitesse	*Piñones Cuentakm*	*Speedometers Pinions*	**PIGNONI CONTACHILOMETRI**	**1269**
Engrenages Compteur Vitesse	*Engranajes Cuentakm*	*Speedometers Gears*	**RINVII CONTACHILOMENTRI**	**1270**
Câbles de Transmission	*Cables de Transmisión*	*Transmission Cables*	**CAVI TRASMISSIONE**	**1272**
Câbles de Transmission APE	*Cables de Transmisión APE*	*APE Transmission Cables*	**CAVI TRASMISSIONE APE**	**1298**
Kit Câbles de Transmission	*Kits Cables de Transmisión*	*Transmission Cables Kits*	**KIT CAVI TRASMISSIONE**	**1304**
Accessoires Câbles de Transmission	*Accesorios Cables de Transmisión*	*Transmission Cables Accessories*	**ACCESSORI CAVI TRASMISSIONE**	**1307**
Serre-Câbles	*Abrazaderas de Cables*	*Cable Clamps*	**MORSETTI CAVI**	**1308**
Passe-Fils	*Conductos de Cables*	*Grommets*	**PASSACAVI**	**1309**
Registres de Câble	*Registros de Cables*	*Cable Registers*	**REGISTRI CAVI**	**1310**
Gaines de Câble	*Vainas Cables*	*Outer Cables*	**GUAINE**	**1311**
Embouts de Câble	*Terminales Vainas Cables*	*Cable Ends*	**CAPIGUAINA**	**1312**
Serrures	*Candados*	*Locks*	**SERRATURE**	**1313**
Accessoires Serrures	*Accesorios Candados*	*Locks Accessories*	**ACCESSORI SERRATURE**	**1320**
Repose-Pieds et Pédales	*Reposapiés y Pedales*	*Footrests and Pedals*	**PEDALI E PUNTAPIEDI**	**1322**
Accessoires Pédales	*Accesorios Pedales*	*Pedals Accessories*	**ACCESSORI PEDALI**	**1323**
Kicks Demarrage	*Pedales de Arranque*	*Kick Starter Levers*	**PEDIVELLE MESSA IN MOTO**	**1324**
Jantes	*Llantas*	*Wheelrims*	**CERCHI**	**1327**
Amortisseurs de Selle	*Amortiguadores de Asiento*	*Saddle Gas Springs*	**MOLLE A GAS**	**1329**
Accessoires de Selles	*Accesorios Asientos*	*Seats Accessories*	**ACCESSORI SELLE**	**1333**
Accessoires Chassis	*Accesorios Asientos*	*Chassis Accessories*	**ACCESSORI TELAIO**	**1334**



LEVE

LEVERS

Modello *Model*	CC	Da *From*	A *To*	Telaio *Frame*	OEM Leva sx *Left Lever OEM Number*	Leva sinistra *Left Lever*	Note leva sinistra *Left Lever Notes*	OEM Leva dx *Right Lever OEM Number*	Leva destra *Right Lever*	Note leva destra *Right Lever Notes*
APRILIA										
Amico	50	1994	1994	HR	AP8218153	**184100021**		AP8218189	**184120010**	
Amico	50	1996	1996	HU010	AP8218153	**184100021**		AP8218189	**184120010**	Tamburo
Amico	50	1996	1996	HU010	AP8218153	**184100021**		AP8218156	**184120021**	Disco
Amico	50	1997	1998	HU010	AP8218274	**184100061**		AP8218273	**184120051**	
Amico Gl-Gle	50	1993	1995	HU	AP8218153	**184100021**		AP8218189	**184120010**	Tamburo
Amico Gl-Gle	50	1993	1995	HU	AP8218153	**184100021**		AP8218156	**184120021**	Disco
Amico Lx- Sport-Cat	50	1992	1993	GC	AP8218153	**184100021**		AP8218156	**184120021**	
Classic	50	1992	1995	GI\LP	AP8218076	**184102510**		-	-	
Classic	50	1996	1999	GI\LP	AP8218326	**184102080**		-	-	
Gulliver	50	1995	1998	LH000	AP8218153	**184100021**	Nera	-	-	
Gulliver	50	1995	1998	LH000	AP8218274	**184100061**	Grigia	-	-	
Gulliver Lc	50	1996	1998	LH040	AP8218274	**184100061**		AP8218288	**184120061**	
Mojito Custom	50	1999	2003	PK001\PKE10	AP8218495	**184101001**		AP8218481	**184120941**	
Mojito Custom 2T Motore Piaggio	50	2004	2010	TF000\TFA00	AP8218495	**184101001**		AP8218482	**184120941**	
Mojito Retro	50	1999	2003	PK000\PKD00	AP8218274	**184100061**		AP8213284	**184120061**	
Rally	50	1994	1995	MD000\MDH00	AP8218153	**184100021**		AP8218156	**184120021**	
Rally	50	1996	1999	MD000\MDH00	AP8218274	**184100061**		AP8218273	**184120051**	
Rally	50	2000	2004	MD000\MDH00	AP8218153	**184100021**		AP8218156	**184120021**	
Rally Liquid Cooled	50	1996	1999	MDA00\MAD10	AP8213279	**184100031**	Disco	AP8213279	**184100031**	
Rally Liquid Cooled	50	1996	1999	MDA00\MAD10	AP8218274	**184100061**	Tamburo	AP8213279	**184100031**	
Red Rose	50	1989	1992	FB	AP8218076	**184102510**		-	-	
Rs	50	2006	2010	PL000\RG000	00H00904291	**184102010**		-	-	
Rs4	50	2011	2013	TK000	00H00904291	**184102010**		-	-	
Rs4 Replica	50	2014	2016	TK000\VX000	00H00904291	**184102010**		-	-	
Scarabeo	50	1993	1996	HS\LE	AP8218176	**184100041**		AP8218156	**184120021**	Disco
Scarabeo	50	1993	1996	HS\LE	AP8218176	**184100041**		-	-	
Scarabeo	50	1997	1997	HS\LE	AP8218329	**184100051**		AP8218273	**184120051**	
Scarabeo	50	1998	1998	PF000\PF0100	AP8218329	**184100051**	Tamburo	AP8218273	**184120051**	
Scarabeo	50	1998	1998	PF000\PF0100	AP8118461	**184100071**	Disco	AP8218273	**184120051**	
Scarabeo	50	1999	1999	PF0\PFG	AP8218329	**184100051**	Tamburo	AP8218273	**184120051**	
Scarabeo	50	1999	1999	PF0\PFG	AP8118461	**184100071**	Disco	AP8218273	**184120051**	
Scarabeo	50	2000	2005	PFG00\TH000	AP8218329	**184100051**	Tamburo	AP8218273	**184120051**	
Scarabeo	50	2000	2005	PFG00\TH000	AP8118461	**184100071**	Disco	AP8218273	**184120051**	
Scarabeo 2T Net	50	2009	2009	THG00	-	**-**		AP8218273	**184120051**	Grimeca
Scarabeo 2T Net	50	2009	2009	THG00	-	**-**		AP8218640	**184120931**	Heng Tong
Scarabeo 4T	50	2002	2006	TG000	-	**-**		AP8218273	**184120051**	Grimeca
Scarabeo 4T	50	2002	2006	TG000	-	**-**		AP8218640	**184120931**	Heng Tong
Scarabeo 4T 4V Net	50	2009	2009	TGE00	-	**-**		AP8218273	**184120051**	Grimeca
Scarabeo 4T 4V Net	50	2009	2009	TGE00	-	**-**		AP8218640	**184120931**	Heng Tong
Scarabeo 4T Restyling Eu3	50	2006	2009	TGA00\TGB00	-	**-**		AP8218273	**184120051**	Grimeca
Scarabeo 4T Restyling Eu3	50	2006	2009	TGA00\TGB00	-	**-**		AP8218640	**184120931**	Heng Tong
Scarabeo Ditech	50	2001	2004	SCA00	AP8118461	**184100071**		AP8218273	**184120051**	
Scarabeo Quattro	50	2009	2009	TGE00	-	**-**		AP8218273	**184120051**	Grimeca
Scarabeo Quattro	50	2009	2009	TGE00	-	**-**		AP8218640	**184120931**	Heng Tong
Scarabeo Street	50	2005	2006	THE00	-	**-**		AP8218273	**184120051**	Grimeca
Scarabeo Street	50	2005	2006	THE00	-	**-**		AP8218640	**184120931**	Heng Tong
Scarabeo Street 2T Restyling	50	2006	2009	THG00	-	**-**		AP8218273	**184120051**	Grimeca
Scarabeo Street 2T Restyling	50	2006	2009	THG00	-	**-**		AP8218640	**184120931**	Heng Tong
Sonic	50	1998	2007	PB000\TL000	AP8218274	**184100061**		AP8218288	**184120061**	Grimeca
Sonic Gp	50	1998	2008	PB010\TLA00	AP8218274	**184100061**		AP8213284	**184120061**	Grimeca
Sport City One 2T	50	2008	2011	SBA00\TCA00	564681	**184100861**		497041	**184120651**	Heng Tong
Sport City One 4T	50	2008	2010	SB000\SBC00	564681	**184100861**		497041	**184120651**	Heng Tong
Sr	50	1993	1993	GP\LB	AP8218153	**184100021**	Nera	AP8218156	**184120021**	



Modello *Model*	CC	Da *From*	A *To*	Telaio *Frame*	OEM Leva sx *Left Lever OEM Number*	Leva sinistra *Left Lever*	Note leva sinistra *Left Lever Notes*	OEM Leva dx *Right Lever OEM Number*	Leva destra *Right Lever*	Note leva destra *Right Lever Notes*
Sr	50	1994	1996	LF	AP8218153	**184100021**	Modello R/S	AP8218156	**184120021**	Modello R/S
Sr	50	1994	1996	LF	AP8218274	**184100061**	Modello T	AP8218273	**184120051**	Modello T
Sr Ditech Euro 2	50	2002	2004	RLD10	AP8218549	**184120501**	Grimeca	AP8218549	**184120501**	Grimeca
Sr H2O Ditech E Carburatore	50	2000	2004	RLA\RLB\RLE	AP8218153	**184100021**		AP8218549	**184120501**	Grimeca
Sr H2O Ditech E Carburatore	50	2000	2004	RLA\RLB\RLE	AP8218549	**184120501**	Grimeca	AP8218549	**184120501**	Grimeca
Sr Iniezione E Carburatore	50	2014	2014	VFB00\VFD00\VFU00	600475	**184120661**	Heng Tong	600475	**184120661**	Heng Tong
Sr Liquid Cooled	50	1994	1996	LC	AP8218153	**184100021**	Modello R/S	AP8218156	**184120021**	Modello R/S
Sr Liquid Cooled	50	1994	1996	LC	AP8218274	**184100061**	Modello T	AP8218273	**184120051**	Modello T
Sr Motard 2T	50	2012	2014	LBMC	564681	**184100861**		646832	**184120651**	Heng Tong
Sr Motard 4T 4V	50	2013	2014	CS5	564681	**184100861**		497041	**184120651**	Heng Tong
Sr R Factory Ie E Carburatore	50	2010	2014	VFB00\VFD00\VFU00	AP8213601	**184100571**	Heng Tong	AP8213601	**184100571**	Heng Tong
Sr R Factory Ie E Carburatore	50	2010	2014	VFB00\VFD00\VFU00	AP8590035	**184100581**	Grimeca	AP8590035	**184100581**	Grimeca
Sr R Factory Ie E Carburatore	50	2010	2014	VFB00\VFD00\VFU00	600475	**184120661**	Heng Tong, Ø 11 mm	AP8213601	**184100571**	Heng Tong
Sr R Factory Motore Aprilia	50	2005	2005	VFA00	AP8213601	**184100571**	Heng Tong	AP8213601	**184100571**	Heng Tong
Sr R Factory Motore Aprilia	50	2005	2005	VFA00	AP8590035	**184100581**	Grimeca	AP8590035	**184100581**	Grimeca
Sr R, R Factory	50	2004	2009	VFB00\VFD00\VFJ\U	AP8213601	**184100571**	Heng Tong	AP8213601	**184100571**	Heng Tong
Sr R, R Factory	50	2004	2009	VFB00\VFD00\VFJ\U	AP8590035	**184100581**	Grimeca	AP8590035	**184100581**	Grimeca
Sr Stealth, Racing	50	1997	2000	MZ	AP8218274	**184100061**		AP8213284	**184120061**	Grimeca
Sr Street	50	2003	2012	TE000\TEA00	AP8218549	**184120501**	Grimeca	AP8218549	**184120501**	Grimeca
Sr Street	50	2003	2012	TE000\TEA00	AP8213597	**184120971**	Heng Tong	AP8213597	**184120971**	Heng Tong
Sr Street	50	2011	2011	TE000\TEA00	600475	**184120661**	Heng Tong, Ø 11 mm	600475	**184120661**	Heng Tong
Sr Www	50	1997	2001	LYH00	AP8218153	**184100021**	Nera	AP8218549	**184120501**	Grimeca, Nera
Sr Www	50	1997	2001	LYH00	AP8218274	**184100061**	Grigia	AP8213284	**184120061**	Grimeca, Grigia
Sr Www	50	1997	2001	LYH00	AP8218549	**184120501**	Grimeca, Nera	AP8218549	**184120501**	Grimeca, Nera
Scarabeo 4T Net	100	2009	2009	VAC\VAA	-	-		AP8218273	**184120051**	Grimeca
Scarabeo 4T Net	100	2009	2009	VAC\VAA	-	-		AP8218640	**184120931**	Heng Tong
Scarabeo 4T Restyling	100	2006	2009	VAA00\VAC00	-	-		AP8218273	**184120051**	Grimeca
Scarabeo 4T Restyling	100	2006	2009	VAA00\VAC00	-	-		AP8218640	**184120931**	Heng Tong
Scarabeo Motore Minarelli	100	2000	2000	REA0	AP8218329	**184100051**		AP8218273	**184120051**	Grimeca
Scarabeo Motore Yamaha	100	2000	2000	RE00	AP8218329	**184100051**		AP8218273	**184120051**	Grimeca
Atlantic	125	2003	2005	SP0\SPA\SPB\SPC	AP8133809	**184100771**	Heng Tong	AP8133809	**184100771**	Heng Tong
Atlantic Eu3	125	2010	2012	SPD00	AP8133809	**184100771**	Heng Tong	AP8133809	**184100771**	Heng Tong
Atlantic Eu3 125-250	125	2006	2008	SPD00\SPE00	AP8133809	**184100771**	Heng Tong	AP8133809	**184100771**	Heng Tong
Leonardo	125	1996	1998	MB000\MBA00	AP8118461	**184100071**		AP8218273	**184120051**	Grimeca
Mojito	125	2003	2007	RY000\RYA00\RY010	AP8218274	**184100061**	Modello Retrò	AP8218288	**184120061**	Modello Retrò
Mojito	125	2003	2007	RY000\RYA00\RY010	AP8218495	**184101001**	Modello Custom	AP8218479	**184120941**	Modello Custom
Mojito	125	2008	2008	SZA00	AP8218495	**184101001**		AP8218480	**184120941**	
Mojito Retro' - Custom	125	1999	2001	PM000\PM010	AP8218274	**184100061**	Modello Retrò	AP8218288	**184120061**	Modello Retrò
Mojito Retro' - Custom	125	1999	2001	PM000\PM010	AP8218495	**184101001**	Modello Custom	AP8218483	**184120941**	Modello Custom
Rs Abs	125	2017	2017	KC000	00H00904291	**184102010**		-	-	
Rs Replica Abs	125	2017	2017	KC000	00H00904291	**184102010**		-	-	
Rs4	125	2011	2013	TW000	00H00904291	**184102010**		-	-	
Rs4 Replica	125	2014	2016	TW000	00H00904291	**184102010**		-	-	
Scarabeo	125	2004	2006	TD002\TDB01	AP8133809	**184100771**	Heng Tong	AP8133809	**184100771**	Heng Tong
Scarabeo Ie Light	125	2009	2010	RBG00\RBH00	AP8133809	**184100771**	Heng Tong	AP8133809	**184100771**	Heng Tong
Scarabeo Ie Light 125-200	125	2011	2012	RBL00\RBM00	AP8133809	**184100771**	Heng Tong	AP8133809	**184100771**	Heng Tong



LEVE

LEVERS

Modello *Model*	**CC**	**Da** *From*	**A** *To*	**Telaio** *Frame*	**OEM Leva sx** *Left Lever OEM Number*	**Leva sinistra** *Left Lever*	**Note leva sinistra** *Left Lever Notes*	**OEM Leva dx** *Right Lever OEM Number*	**Leva destra** *Right Lever*	**Note leva destra** *Right Lever Notes*
Scarabeo Light	125	2007	2008	RB000\RBA00	AP8133809	**184100771**	Heng Tong	AP8133809	**184100771**	Heng Tong
Scarabeo Motore Piaggio Eu3	125	2006	2006	TD005\TDA03	AP8133809	**184100771**	Heng Tong	AP8133809	**184100771**	Heng Tong
Scarabeo Motore Rotax	125	1999	2004	PC000\PCA00\SD000	AP8118542	**184120521**		AP8118542	**184120521**	
Sport City	125	2004	2006	VB000\VBA00	AP8213601	**184100571**	Heng Tong	AP8213601	**184100571**	Heng Tong
Sport City	125	2004	2006	VB000\VBA00	AP8590035	**184100581**	Grimeca	AP8590035	**184100581**	Grimeca
Sport City Cube	125	2008	2010	VBE00\VBG00	AP8133809	**184100771**	Heng Tong	AP8133809	**184100771**	Heng Tong
Sport City Euro3	125	2006	2008	VB002\VBA01\VBB00	AP8213601	**184100571**	Heng Tong	AP8213601	**184100571**	Heng Tong
Sport City Euro3	125	2006	2008	VB002\VBA01\VBB00	AP8590035	**184100581**	Grimeca	AP8590035	**184100581**	Grimeca
Sport City One 4T Euro3	125	2008	2011	SG000\SGC00	564681	**184100861**		497041	**184120651**	Heng Tong
Sport City Street	125	2012	2012	VBM00	AP8213601	**184100571**	Heng Tong	AP8213601	**184100571**	Heng Tong
Sport City Street	125	2012	2012	VBM00	AP8590035	**184100581**	Grimeca	AP8590035	**184100581**	Grimeca
Sr	125	1999	2001	PXA00\PXC00	AP8218153	**184100021**	Nera	AP8218549	**184120501**	Grimeca, Nera
Sr	125	1999	2001	PXA00\PXC00	AP8218274	**184100061**	Grigia	AP8213284	**184120061**	Grimeca, Grigia
Sr Max	125	2011	2014	PM35700	600475	**184120661**	Heng Tong	600475	**184120661**	Heng Tong
Sr Motard	125	2012	2014	LBMM7	564681	**184100861**		646832	**184120651**	Heng Tong
Scarabeo Ie Light 125-200	200	2011	2012	RBL00\RBM00	AP8133809	**184100771**	Heng Tong	AP8133809	**184100771**	Heng Tong
Atlantic Eu3 125-250	250	2006	2008	SPD00\SPE00	AP8133809	**184100771**	Heng Tong	AP8133809	**184100771**	Heng Tong
Leonardo	250	1999	2001	PD000	AP8218480	**184120531**	Grimeca	AP8218480	**184120531**	Grimeca
Leonardo St	250	2001	2001	PD010	AP8218480	**184120531**	Grimeca	AP8218480	**184120531**	Grimeca
Scarabeo Light	250	2006	2008	VRB00	AP8133809	**184100771**	Heng Tong	AP8133809	**184100771**	Heng Tong
Sport City Cube	250	2008	2012	VBH00\VBL00	AP8133809	**184100771**	Heng Tong	AP8133809	**184100771**	Heng Tong
Atlantic	300	2010	2011	SPG00	AP8133809	**184100771**	Heng Tong	AP8133809	**184100771**	Heng Tong
Leonardo	300	2002	2004	SV000\SVA00	AP8218480	**184120531**	Grimeca	AP8218480	**184120531**	Grimeca
Scarabeo Light	300	2009	2010	VRG00	AP8133809	**184100771**	Heng Tong	AP8133809	**184100771**	Heng Tong
Sport City Street	300	2012	2012	VBR00	AP8213601	**184100571**	Heng Tong	AP8213601	**184100571**	Heng Tong
Sport City Street	300	2012	2012	VBR00	AP8590035	**184100581**	Grimeca	AP8590035	**184100581**	Grimeca
Sr Max	300	2011	2014	PM35600	600475	**184120661**	Heng Tong	600475	**184120661**	Heng Tong
Atlantic Sprint 400-500	400	2005	2008	VL000\VLA00\VLB00	AP8133809	**184100771**	Heng Tong	AP8133809	**184100771**	Heng Tong
Scarabeo Light 400-500	400	2006	2008	VR000\VRA00\VRE00	AP8133809	**184100771**	Heng Tong	AP8133809	**184100771**	Heng Tong
Mxv	450	2008	2011	VTC0C	-	**-**		AP9100787	**184122530**	
Atlantic	500	2001	2004	PT00\VH00	AP8118542	**184120521**		AP8118542	**184120521**	
Atlantic Sprint 400-500	500	2005	2008	VL000\VLA00\VLB00	AP8133809	**184100771**	Heng Tong	AP8133809	**184100771**	Heng Tong
Scarabeo	500	2003	2006	RT00	AP8118542	**184120521**		AP8118542	**184120521**	
Scarabeo Light 400-500	500	2006	2008	VR000\VRA00\VRE00	AP8133809	**184100771**	Heng Tong	AP8133809	**184100771**	Heng Tong
Dorsoduro Factory	750	2010	2013	SMB00\SMB01	AP8113758	**184102300**		-	**-**	
Etv Capo Nord - Rally	1000	2001	2003	PS00\PSB0	AP8118659	**184102300**		-	**-**	
Etv Capo Nord Abs	1000	2004	2007	PS004	AP8118659	**184102300**		-	**-**	
Rst Futura	1000	2001	2003	PW003	AP8118659	**184102300**		-	**-**	
Rsv	1000	1998	1999	ME00	AP8113758	**184102300**		AP8113757	**184122300**	
Rsv R - Factory - Dream	1000	2004	2008	RR00\RRK0	AP8133667	**184102280**		AP8133664	**184122280**	
Rsv R Tuono	1000	2002	2005	RPB00\RPB06\RPB09	AP8113758	**184102300**		AP8113757	**184122300**	
Rsv Sp	1000	1999	2000	MED0	AP8113758	**184102300**		AP8113757	**184122300**	
Rsv, Rsv R	1000	2000	2000	ME00	AP8113758	**184102300**		-	**-**	
Rsv, Rsv R	1000	2001	2002	RP00\RPA0	AP8113758	**184102300**		AP8113757	**184122300**	
Rsv, Rsv R	1000	2003	2003	RP12	AP8113758	**184102300**		AP8113757	**184122300**	
Rsv4 Aprc R	1000	2011	2012	RKE00\RKE01	893926	**184102000**		AP8133664	**184122280**	
Rsv4 Aprc R Abs	1000	2013	2014	RKH\RKU04\RKUA4	893926	**184102000**		AP8133664	**184122280**	
Rsv4 Factory - Sbk Racing	1000	2009	2010	RK000\RK001\RKC00	893926	**184102000**		AP8133664	**184122280**	
Rsv4 Factory Aprc Abs	1000	2013	2014	RKG\RKU02\RKB03	893926	**184102000**		AP8133664	**184122280**	



Modello *Model*	CC	Da *From*	A *To*	Telaio *Frame*	OEM Leva sx *Left Lever OEM Number*	Leva sinistra *Left Lever*	Note leva sinistra *Left Lever Notes*	OEM Leva dx *Right Lever OEM Number*	Leva destra *Right Lever*	Note leva destra *Right Lever Notes*
Rsv4 Factory Aprc Std - Se	1000	2011	2012	RKB00\RKB01	893926	**184102000**		AP8133664	**184122280**	
Rsv4 R	1000	2009	2010	RKA00\RKC01	893926	**184102000**		AP8133664	**184122280**	
Rsv4 Racing Factory Le	1000	2015	2016	RKL00\RKL01	893926	**184102000**		AP8133664	**184122280**	
Rsv4 Racing Factory Le	1000	2017	2017	KE000	893926	**184102000**		-	**-**	
Rsv4 Rr	1000	2015	2015	-	893926	**184102000**		AP8133664	**184122280**	
Rsv4 Rr	1000	2016	2016	RKL00\RKL01	893926	**184102000**		AP8133664	**184122280**	
Rsv4 Rr	1000	2017	2017	KE000	893926	**184102000**		-	**-**	
Rsv4 Rr Racer Pack	1000	2015	2015	RKL00	893926	**184102000**		AP8133664	**184122280**	
Sl Falco	1000	2000	2003	PA00	AP8113758	**184102300**		AP8113757	**184122300**	
Tuono R-Factory	1000	2006	2009	RRL00	AP8118718	**184102300**		-	**-**	
Tuono V4 R Aprc Abs	1000	2014	2014	TYB02\TYB03	893926	**184102000**		-	**-**	
Tuono V4 R Std - Aprc	1000	2011	2013	TY000	893926	**184102000**		-	**-**	
Tuono V4 Factory	1100	2015	2016	TYH00\TYCC1	893926	**184102000**		-	**-**	
Tuono V4 Rr	1100	2015	2016	TYG00\TYCC0	893926	**184102000**		-	**-**	
Caponord	1200	2013	2016	ZD4VK\ZD4VKA	AP8113758	**184102300**		-	**-**	
Caponord Carabinieri	1200	2015	2015	VK000	AP8113758	**184102300**		-	**-**	
Caponord Rally	1200	2015	2016	VKB000\VKB001	AP8113758	**184102300**		-	**-**	
Dorsoduro	1200	2010	2015	TV000\TV001\TVA00	AP8113758	**184102300**		-	**-**	
BENELLI										
Tnt R	1130	2011	2014	TN0005	R301565002000	**184102280**		R301564046000	**184122280**	
Tnt R160	1130	2010	2014	TN0003	R301565002000	**184102280**		R301564046000	**184122280**	
BETA										
Re 125	125	2009	2009	-	2127105000	**184122500**		2127105000	**184122500**	
Rr 125 Ac Enduro	125	2009	2009	-	2127105000	**184122500**		2127105000	**184122500**	
Rr 125 Ac Enduro Euro3	125	2008	2008	-	2127105000	**184122500**		2127105000	**184122500**	
Rr 125 Ac Motard	125	2009	2009	-	2127105000	**184122500**		2127105000	**184122500**	
Rr 250 2T Enduro	250	2014	2017	-	-	**-**		2127104000	**184122530**	
Rr 250 4T Enduro	250	2005	2007	E101	2127085000	**184102250**	Corta	2127104000	**184122530**	
Rr 300 2T Enduro	300	2014	2017	-	-	**-**		2127104000	**184122530**	
Rr 350 4T Enduro	350	2011	2012	-	-	**184102360**		2127104000	**184122530**	
Rr 350 4T Enduro	350	2013	2018	-	-	**-**		2127104000	**184122530**	
Rr 400 Enduro	400	2005	2006	-	-	**-**		2127104000	**184122530**	
Rr 400 Enduro	400	2007	2011	-	2127085000	**184102250**	Corta	2127104000	**184122530**	
Rr 400 Enduro	400	2012	2012	-	-	**184102360**		2127104000	**184122530**	
Rr 400 Enduro	400	2013	2014	-	-	**-**		2127104000	**184122530**	
Rr 450 Enduro	450	2005	2006	-	-	**-**		2127104000	**184122530**	
Rr 450 Enduro	450	2007	2011	-	2127085000	**184102250**	Corta	2127104000	**184122530**	
Rr 450 Enduro	450	2012	2012	-	-	**184102360**		2127104000	**184122530**	
Rr 450 Enduro	450	2013	2014	-	-	**-**		2127104000	**184122530**	
Rr 450 Enduro Racing	450	2005	2009	-	2127085000	**184102250**	Corta	2127104000	**184122530**	
Rr 498 Enduro	498	2012	2012	-	-	**184102360**		2127104000	**184122530**	
Rr 520 Enduro	520	2010	2011	-	2127085000	**184102250**	Corta	2127104000	**184122530**	
Rr 525 Enduro	525	2005	2009	-	2127085000	**184102250**	Corta	2127104000	**184122530**	
Rr 525 Enduro Racing	525	2005	2009	-	2127085000	**184102250**	Corta	2127104000	**184122530**	
BMW										
F 650 650 Cs Scarver	650	2002	2003	K14	-	**184102510**		32727655208	**184122260**	
F 650 650 Cs Scarver	650	2004	2005	E650C	32727692857	**184102550**		32727655208	**184122260**	
F 650 650 Cs Scarver Abs	650	2002	2003	K14	-	**184102510**		32727655208	**184122260**	
F 650 650 Cs Scarver Abs	650	2004	2005	E650C	32727692857	**184102550**		32727655208	**184122260**	



LEVE

LEVERS

Modello *Model*	**CC**	**Da** *From*	**A** *To*	**Telaio** *Frame*	**OEM Leva sx** *Left Lever OEM Number*	**Leva sinistra** *Left Lever*	**Note leva sinistra** *Left Lever Notes*	**OEM Leva dx** *Right Lever OEM Number*	**Leva destra** *Right Lever*	**Note leva destra** *Right Lever Notes*
F 650 650 Gs	650	2000	2003	R13	-	**184102510**		32727655208	**184122260**	
F 650 650 Gs	650	2004	2008	E650G	32727692857	**184102550**		32727655208	**184122260**	
F 650 650 Gs Abs	650	2000	2003	R13	-	**184102510**		32727655208	**184122260**	
F 650 650 Gs Abs	650	2004	2008	E650G	32727692857	**184102550**		32727655208	**184122260**	
F 650 650 Gs Dakar	650	2000	2003	R13	-	**184102510**		32727655208	**184122260**	
F 650 650 Gs Dakar	650	2004	2008	E650G	32727692857	**184102550**		32727655208	**184122260**	
F 650 650 Gs Dakar Abs	650	2002	2003	R13	-	**184102510**		32727655208	**184122260**	
F 650 650 Gs Dakar Abs	650	2004	2008	E650G	32727692857	**184102550**		32727655208	**184122260**	
G 650 Gs	650	2011	2012	R13	32727692857	**184102550**		32727655208	**184122260**	
G 650 Gs Abs	650	2012	2013	R13	32727692857	**184102550**		32727655208	**184122260**	
G 650 Gs Sertäo	650	2012	2012	R13	32727692857	**184102550**		32727655208	**184122260**	
G 650 Gs Sertäo Abs	650	2012	2013	R13	32727692857	**184102550**		32727655208	**184122260**	
CAGIVA										
Mito	50	1998	1999	P200AA	00F00910291	**184102050**		-	**-**	
Progress	50	1997	1999	P100AA	00F00910291	**184102050**		00H00901201	**184122060**	
Progress Lc	50	1998	1999	-	00F00910291	**184102050**		00H00901201	**184122060**	
W16	500	1994	1998	2G	8A0047820	**184102510**		-	**-**	
Raptor - V Raptor	650	2001	2005	M210\M211	8AA067163	**184102080**		800095726	**184122120**	
Raptor Ie	650	2006	2006	M210AC5V	8AA067163	**184102080**		800095726	**184122120**	
Raptor - V Raptor - X-Tra Raptor	1000	2000	2005	M200\M201	8AA067163	**184102080**		800095726	**184122120**	
DAELIM										
Vc 125 Advance	125	1996	1996	VC125F	53178BA79500	**184102430**		-	**-**	
Vc 125 Advance 80 Km/h	125	1996	1996	VC125F	53178BA79500	**184102430**		-	**-**	
Vj 125 Fi Roadwin	125	2012	2016	BA4BLS	53178BA79500	**184102430**		53175BA40000	**184122050**	
Vj 125 Roadwin	125	2004	2007	BA4BLS	53178BA79500	**184102430**		53175BA40000	**184122050**	
Vjf 125 R Fi Roadwin	125	2007	2017	BA8BLS	53178BA79500	**184102430**		53175BA40000	**184122050**	
Vl 125 Fi Daystar	125	2008	2017	BA1BLS	-	**-**		-	**184122600**	
Vt 125	125	1998	2000	VT125FK	53178BA79500	**184102430**		-	**-**	
Vt 125 80 Km/h	125	1998	2000	VT125FK	53178BA79500	**184102430**		-	**-**	
Vt 125 Evolution	125	2000	2002	VT125FK	53178BA79500	**184102430**		-	**-**	
Vt 125 Evolution 80 Km/h	125	2000	2002	VT125FK	53178BA79500	**184102430**		-	**-**	
DERBI										
Boulevard 2T	50	2009	2014	BR1A1A	564683	**184100601**		646833	**184120711**	Heng Tong
Boulevard 2T	50	2009	2014	BR1A1A	564683	**184100601**		646803	**184120731**	Grimeca
Boulevard 4T Eu2 25 Km/h	50	2009	2009	-	564683	**184100601**		497042	**184120711**	Heng Tong
Boulevard 4T Eu2 25 Km/h	50	2009	2009	-	564683	**184100601**		646803	**184120731**	Grimeca
Gp1	50	2001	2002	PREDWB\PREDSB	00F00902292	**184122450**		00F00902292	**184122450**	
Gp1	50	2003	2003	PREDXB	00F00902292	**184122450**		00F00902292	**184122450**	
Gp1 E2	50	2003	2003	PREDXB	00F00902292	**184122450**		00F00902292	**184122450**	
Gp1 Euro2	50	2005	2005	PR1A1A	00G00903201	**184122450**		00G00903201	**184122450**	
Gp1 Open Eu2	50	2006	2009	PR1B1A	00G00903201	**184122450**		00G00903201	**184122450**	
Gp1 Race Eu2	50	2005	2007	PR1A1A	00G00903201	**184122450**		00G00903201	**184122450**	
Gpr 2T	50	2013	2013	PVXA00	00H00904291	**184102010**		-	**-**	
Gpr 2T Eu2	50	2009	2010	RF1A1A	00H00904291	**184102010**		864339	**184122450**	
Gpr Nude	50	2004	2005	GR1A1B	00H00904291	**184102010**		-	**-**	
Gpr Nude & Gpr Nude Tuning	50	2006	2008	-	00H00904291	**184102010**		-	**-**	
Gpr Nude Sport	50	2006	2006	-	00H00904291	**184102010**		-	**-**	
Gpr R	50	1997	2000	-	00F00910291	**184102050**		00H00902201	**184122060**	
Gpr R Eu2 - Gpr Replica Eu2	50	2008	2008	-	00H00904291	**184102010**		-	**-**	
Gpr Racing	50	2004	2005	GR1A1A\GR1AB7	00H00904291	**184102010**		-	**-**	
Gpr Racing Eu2	50	2006	2006	GR1D1A	00H00904291	**184102010**		-	**-**	



Modello *Model*	CC	Da *From*	A *To*	Telaio *Frame*	OEM Leva sx *Left Lever OEM Number*	Leva sinistra *Left Lever*	Note leva sinistra *Left Lever Notes*	OEM Leva dx *Right Lever OEM Number*	Leva destra *Right Lever*	Note leva destra *Right Lever Notes*
Gpr Replica	50	1999	2001	GPRREB	00F00910291	**184102050**		00H00902201	**184122060**	
Gpr Replica & Gpr R Eu2	50	2006	2006	GR1D1A	00H00904291	**184102010**		-	-	
Gpr Replica 2T Malossi	50	2007	2007	GR1D1A	00H00904291	**184102010**		-	-	
Gpr Replica Pesek Eu2	50	2007	2007	-	00H00904291	**184102010**		-	-	
Gpr Replica Racing	50	2002	2003	GPRRWB	00F00910291	**184102050**		00H00902201	**184122060**	
Gpr Replica Racing Eu2	50	2005	2005	GR1A1A	00H00904291	**184102010**		-	-	
Hunter	50	1996	1997	-	00F00910291	**184102050**		-	-	
Paddock	50	1998	1999	-	00F00910291	**184102050**		-	-	
Predator O2	50	1998	2001	PREDAA	00F00910291	**184102050**		-	-	
Senda Hyp Drd Evo Eu2	50	2008	2009	SR2D1C	00H00903291	**184102040**		-	-	
Senda R Drd Eu1 Eu1R	50	2002	2002	SDR1GB	00F00910291	**184102050**		-	-	
Senda R Drd Eu1 Eu1R	50	2003	2003	SDR1GB	00H00903291	**184102040**		-	-	
Senda R Drd Racing	50	2004	2005	SR1A2B	00H00903291	**184102040**		00H00906203	**184122020**	
Senda R Drd Racing Eu2	50	2005	2008	SR1D2B	00H00903291	**184102040**		00H00906203	**184122020**	
Senda R Drd X-Treme 2T Eu2	50	2014	2015	ZDPAB	00H00903291	**184102040**		-	-	
Senda R Drd X-Treme 2T Euro2	50	2010	2012	ABB00\ABA01	00H00903291	**184102040**		-	-	
Senda R Racer	50	2003	2003	SENDGB	00F00910291	**184102050**		-	-	
Senda R X Trem Eu2	50	2008	2008	SR1D1A	00F00910291	**184102050**		-	-	
Senda R X-Race	50	2004	2005	SR1A1A	00F00910291	**184102050**		-	-	
Senda R X-Race 2T Eu2	50	2010	2010	SR1D1A	00F00910291	**184102050**		-	-	
Senda R X-Race Eu2	50	2006	2009	SR1D1A	00F00910291	**184102050**		-	-	
Senda R X-Trem	50	2005	2005	SR1A1A\SR1C1A	00F00910291	**184102050**		-	-	
Senda R X-Trem 2T Eu2	50	2010	2010	SR1D1A	00F00910291	**184102050**		-	-	
Senda R X-Trem Eu2	50	2004	2004	SR1A1A	00F00910291	**184102050**		-	-	
Senda R X-Trem Eu2	50	2005	2007	SR1D1A	00F00910291	**184102050**		-	-	
Senda Sm Drd Eu1 Eu1R	50	2002	2003	SDR1DB\SDR1HB	00F00910291	**184102050**		-	-	
Senda Sm Drd Eu1 Eu1R	50	2003	2003	SDR1DB\SDR1HB	00H00903291	**184102040**		-	-	
Senda Sm Drd Racing	50	2004	2005	SR2A2B	00H00903291	**184102040**		00H00906203	**184122020**	
Senda Sm Drd Racing 2T Euro2	50	2010	2013	PABB00	00H00903291	**184102040**		-	-	
Senda Sm Drd Racing Eu2	50	2005	2008	SR2D2B	00H00903291	**184102040**		00H00906203	**184122020**	
Senda Sm Drd X-Treme 2T Eu2	50	2014	2015	-	00H00903291	**184102040**		-	-	
Senda Sm Drd X-Treme 2T Eu2 Limited Ed	50	2014	2015	ZDPABB	00H00903291	**184102040**		-	-	
Senda Sm X Trem Eu2	50	2008	2008	-	00F00910291	**184102050**		-	-	
Senda Sm X-Race	50	2004	2005	SR2A1A	00F00910291	**184102050**		-	-	
Senda Sm X-Race 2T Eu2	50	2010	2010	SR2D1A	00F00910291	**184102050**		-	-	
Senda Sm X-Race Eu2	50	2006	2006	SR2E1A	00F00910291	**184102050**		-	-	
Senda Sm X-Race Eu2	50	2007	2009	-	00F00910291	**184102050**		-	-	
Senda Sm X-Race Eu2 2Ver	50	2007	2009	SR2D1A\SR2E1A	00F00910291	**184102050**		-	-	
Senda Sm X-Trem	50	2002	2002	SDR1BB\SDRBB	00F00910291	**184102050**		-	-	
Senda Sm X-Trem	50	2003	2003	SDR1FB	00F00910291	**184102050**		-	-	



LEVE

LEVERS

Modello *Model*	**CC**	**Da** *From*	**A** *To*	**Telaio** *Frame*	**OEM Leva sx** *Left Lever OEM Number*	**Leva sinistra** *Left Lever*	**Note leva sinistra** *Left Lever Notes*	**OEM Leva dx** *Right Lever OEM Number*	**Leva destra** *Right Lever*	**Note leva destra** *Right Lever Notes*
Senda Sm X-Trem 2T Eu2	50	2010	2010	SR2D1A	00F00910291	**184102050**		-	-	
Senda Sm X-Trem Eu2	50	2004	2004	SR2A1A	00F00910291	**184102050**		-	-	
Senda Sm X-Trem Eu2	50	2005	2007	-	00F00910291	**184102050**		-	-	
Senda Sm X-Trem Eu2 2A Edizione	50	2005	2005	SR2A1A\SR2B1A	00F00910291	**184102050**		-	-	
Sonar 2T	50	2009	2009	LR1A1A	564683	**184100601**		646833	**184120711**	Heng Tong
Variant Courier E2	50	2007	2007	VR1AE2	00F00910291	**184102050**		-	-	
Variant Revolution	50	2003	2003	VR1BE1	00F00910291	**184102050**		-	-	
Variant Sport 2T	50	2012	2012	SBA00	564681	**184100861**		497041	**184120651**	Heng Tong
Boulevard 4T	100	2010	2011	M57A00	564683	**184100601**		646833	**184120711**	Heng Tong
Boulevard 4T	100	2010	2011	M57A00	564683	**184100601**		646803	**184120731**	Grimeca
Boulevard 125-150	125	2002	2002	BL2A1A\BL3A1A	564681	**184100861**		-	-	
Boulevard 125-150 Eu2	125	2004	2007	-	564681	**184100861**		-	-	
Boulevard 4T Eu3	125	2008	2012	VTHM571	564683	**184100601**		646803	**184120731**	Grimeca
Cross City 4T Eu3	125	2007	2012	SC2D1B\SC2E1B	-	-		864339	**184122450**	
Gp1 Eu2	125	2006	2006	PS1A1A	00G00903201	**184122450**		00G00903201	**184122450**	
Gp1 Low Seat 125 Eu3	125	2007	2008	PS1B1A	00G00903201	**184122450**		00G00903201	**184122450**	
Gpr 4T	125	2009	2010	RG1A1A	00H00904291	**184102010**		864339	**184122450**	
Gpr Nude - Nude Sport	125	2004	2006	GS1A1B	00H00904291	**184102010**		-	-	
Gpr Racing	125	2004	2006	GS1A1A	00H00904291	**184102010**		-	-	
Mulhacen 4T Eu3	125	2007	2009	MS1A1A	-	-		864339	**184122450**	
Mulhacen 4T Eu3	125	2010	2010	MS1A2A	-	-		864339	**184122450**	
Rambla 125-250	125	2008	2009	RA1A1A\RA1B1A	AP8213601	**184100571**	Heng Tong	AP8213601	**184100571**	Heng Tong
Rambla 125-250	125	2008	2009	RA1A1A\RA1B1A	AP8590035	**184100581**	Grimeca	AP8590035	**184100581**	Grimeca
Rambla 125-250 E3 2Ver	125	2008	2008	RA1A\RA1B	AP8213601	**184100571**	Heng Tong	AP8213601	**184100571**	Heng Tong
Rambla 125-250 E3 2Ver	125	2008	2008	RA1A\RA1B	AP8590035	**184100581**	Grimeca	AP8590035	**184100581**	Grimeca
Senda R	125	2004	2004	SC1A1A	00F00910291	**184102050**		-	-	
Senda R 4T Baja Eu2 & Eu3	125	2006	2009	SC1C1A\SC1D1A	00H00903291	**184102040**		00H00906203	**184122020**	
Senda R 4T Baja Eu3	125	2010	2011	SC1E1A	00H00903291	**184102040**		00H00906203	**184122020**	
Senda R 4T Eu2	125	2004	2007	SC1B1A	00H00903291	**184102040**		00H00906203	**184122020**	
Senda R Eu2	125	2004	2004	SC1B1A	00H00903291	**184102040**		00H00906203	**184122020**	
Senda Sm	125	2004	2004	SC2A1A	00F00910291	**184102050**		-	-	
Senda Sm 4T Baja Eu2 & Eu3	125	2006	2009	SC2C1A\SC2D1A	00H00903291	**184102040**		00H00906203	**184122020**	
Senda Sm 4T Baja Eu3	125	2010	2011	SC2E1A	00H00903291	**184102040**		00H00906203	**184122020**	
Senda Sm 4T Eu2	125	2004	2007	SC2B1A	00H00903291	**184102040**		00H00906203	**184122020**	
Senda Sm Eu2	125	2004	2004	SC2B1A	00H00903291	**184102040**		00H00906203	**184122020**	
Sonar 4T	125	2009	2011	LS1A1A	564683	**184100601**		646833	**184120711**	Heng Tong
Terra 4T Eu3 - 4T Adventure	125	2007	2009	TS1A1A\TS1A2B	-	-		864339	**184122450**	
Variant Sport 4T E3	125	2012	2012	SG000	564681	**184100861**		497041	**184120651**	Heng Tong
Boulevard 125-150	150	2003	2004	BL2B1A\BL3B1A	564681	**184100861**		-	-	
Boulevard 4T E3	150	2010	2010	M57200	564683	**184100601**		646833	**184120711**	Heng Tong
Sonar 4T	150	2009	2009	LS3A1A	564683	**184100601**		646833	**184120711**	Heng Tong
Boulevard Eu2	200	2005	2006	BL4B1A	564681	**184100861**		-	-	
Gp1	250	2006	2007	PT1A1A	00G00903201	**184122450**		00G00903201	**184122450**	
Gp1 Low Seat 250 Eu3	250	2007	2008	PT1B1A	00G00903201	**184122450**		00G00903201	**184122450**	
Rambla 125-250	250	2008	2009	RA1A1A\RA1B1A	AP8213601	**184100571**	Heng Tong	AP8213601	**184100571**	Heng Tong
Rambla 125-250	250	2008	2009	RA1A1A\RA1B1A	AP8590035	**184100581**	Grimeca	AP8590035	**184100581**	Grimeca



Modello *Model*	CC	Da *From*	A *To*	Telaio *Frame*	OEM Leva sx *Left Lever OEM Number*	Leva sinistra *Left Lever*	Note leva sinistra *Left Lever Notes*	OEM Leva dx *Right Lever OEM Number*	Leva destra *Right Lever*	Note leva destra *Right Lever Notes*
Rambla 125-250 E3 2Ver	250	2008	2008	RA1A\RA1B	AP8213601	**184100571**	Heng Tong	AP8213601	**184100571**	Heng Tong
Rambla 125-250 E3 2Ver	250	2008	2008	RA1A\RA1B	AP8590035	**184100581**	Grimeca	AP8590035	**184100581**	Grimeca
Rambla	300	2010	2011	VTHRA1C	AP8213601	**184100571**	Heng Tong	AP8213601	**184100571**	Heng Tong
Rambla	300	2010	2011	VTHRA1C	AP8590035	**184100581**	Grimeca	AP8590035	**184100581**	Grimeca
DUCATI										
Monster 400	400	1995	1997	400M	62610021A	**184122490**		62610021A	**184122490**	
Monster 400	400	2000	2003	M300AA	62610021A	**184122490**		62610021A	**184122490**	
Monster 400	400	2004	2008	M407AA	62640071C	**184102380**		62610021A	**184122490**	
Monster 400 Dark	400	2005	2005	M407AA	62640071C	**184102380**		62610021A	**184122490**	
Scrambler Sixty2	400	2016	2018	-	62610021A	**184122490**		62610021A	**184122490**	
Supersport 400 Ss	400	1993	1997	400J	62610021A	**184122490**		62610021A	**184122490**	
Monster 600	600	1993	1998	600M	62610021A	**184122490**		62610021A	**184122490**	
Monster 600	600	1999	2001	M300AA	62610021A	**184122490**		62610021A	**184122490**	
Monster 600 City	600	1999	1999	M300AA	62610021A	**184122490**		62610021A	**184122490**	
Monster 600 Dark	600	1998	1998	600M	62610021A	**184122490**		62610021A	**184122490**	
Monster 600 Dark City	600	1999	1999	M300AA	62610021A	**184122490**		62610021A	**184122490**	
Supersport 600 Ss	600	1991	1997	600S	62610021A	**184122490**		62610021A	**184122490**	
Monster 620	620	2002	2002	M400AA	62610021A	**184122490**		62610021A	**184122490**	
Monster 620	620	2003	2003	M400AA	62640071C	**184102380**		62610021A	**184122490**	
Monster 620	620	2004	2004	M403AC	62610031D	**184102380**		62610021A	**184122490**	
Monster 620	620	2005	2005	M408AA	62640071C	**184102380**		62610021A	**184122490**	
Monster 620	620	2006	2006	M403AC	62610031D	**184102380**		62610021A	**184122490**	
Monster 620 Dark	620	2005	2005	M408AA	62640071C	**184102380**		62610021A	**184122490**	
Monster 620 Dark	620	2006	2006	M408AA	62610031D	**184102380**		62610021A	**184122490**	
Monster 620 Dark Single Disc	620	2005	2005	M403AC	62640071C	**184102380**		62610021A	**184122490**	
Multistrada 620	620	2006	2006	-	62640071C	**184102380**		62610021A	**184122490**	
Multistrada 620 Dark	620	2006	2006	A103AA	62640071C	**184102380**		62610021A	**184122490**	
Supersport 620 S	620	2003	2003	V500AA	-	**-**		62610021A	**184122490**	
Monster	660	2012	2012	M514AA	-	**-**		62640701A	**184122430**	
Monster	660	2012	2012	M514AB	-	**-**		62640701A	**184122430**	
Monster	660	2013	2014	-	-	**-**		62640701A	**184122430**	
Monster 695	695	2007	2008	M419AA	62610031D	**184102380**		62610021A	**184122490**	
Monster	700	2010	2012	1RADN	-	**-**		62640701A	**184122430**	
Monster	700	2010	2012	M500AA\M501AA	-	**-**		62640701A	**184122430**	
Monster	700	2010	2012	M503AA\M504AA	-	**-**		62640701A	**184122430**	
Monster	700	2013	2014	-	-	**-**		62640701A	**184122430**	
Monster 696	700	2008	2009	M500AA\M501AA	62640071C	**184102380**		62610021A	**184122490**	
Superbike 749	748	2003	2003	H500AA	63140171A	**184102280**		62640271A	**184122280**	
Superbike 749 Dark	748	2004	2004	H500AA	63140171A	**184102280**		63140191A	**184122280**	
Superbike 749 Dark	748	2005	2006	H500AA	63140171A	**184102280**		62640271A	**184122280**	
Superbike 749 R	748	2004	2005	H501AG	63140171A	**184102280**		62640271A	**184122280**	
Superbike 749 R	748	2006	2006	H501AG	63140171A	**184102280**		63140191A	**184122280**	
Superbike 749 S	748	2003	2006	-	63140171A	**184102280**		62640271A	**184122280**	
Monster 750	750	1996	2001	M100AA	62610021A	**184122490**		62610021A	**184122490**	
Monster 750	750	2002	2002	M400AA	62610021A	**184122490**		62610021A	**184122490**	
Monster 750 City	750	1999	1999	M100AA	62610021A	**184122490**		62610021A	**184122490**	
Monster 750 Dark	750	1999	1999	M100AA	62610021A	**184122490**		62610021A	**184122490**	
Monster 750 Dark City	750	1999	1999	M100AA	62610021A	**184122490**		62610021A	**184122490**	
Supersport 750 Ss	750	1991	1997	750SC	62610021A	**184122490**		62610021A	**184122490**	
Monster	795	2013	2015	-	-	**-**		62640701A	**184122430**	
Monster	796	2013	2015	-	-	**-**		62640701A	**184122430**	
Hypermotard	800	2010	2011	1YACR	-	**-**		62640701A	**184122430**	
Hypermotard	800	2010	2012	B101AA\B102AA	-	**-**		62640701A	**184122430**	
Hypermotard	800	2012	2012	1YAAN	-	**-**		62640701A	**184122430**	



LEVE

LEVERS

Modello *Model*	**CC**	**Da** *From*	**A** *To*	**Telaio** *Frame*	**OEM Leva sx** *Left Lever OEM Number*	**Leva sinistra** *Left Lever*	**Note leva sinistra** *Left Lever Notes*	**OEM Leva dx** *Right Lever OEM Number*	**Leva destra** *Right Lever*	**Note leva destra** *Right Lever Notes*
Monster	800	2011	2012	1RANN	-	**-**		62640701A	**184122430**	
Monster	800	2011	2012	M506AA	-	**-**		62640701A	**184122430**	
Monster	800	2011	2012	M506AB	-	**-**		62640701A	**184122430**	
Monster 800	800	2003	2004	M406AA	62640071C	**184102380**		62610021A	**184122490**	
Monster S2R 800	800	2005	2006	M414AA	62610031D	**184102380**		62610021A	**184122490**	
Monster S2R 800	800	2007	2007	M421AA	62610031D	**184102380**		62610021A	**184122490**	
Monster S2R 800 Dark	800	2005	2005	M414AA	62640071C	**184102380**		62610021A	**184122490**	
Monster S2R 800 Dark	800	2006	2006	M414AA	62610031D	**184102380**		62610021A	**184122490**	
Supersport 800 S	800	2003	2003	V500AA	62610021A	**184122490**		62610021A	**184122490**	
Supersport 800 Ss	800	2003	2003	V500AA	62640351A	**184102300**		62640071A	**184122300**	
Streetfighter 848	848	2013	2015	-	63140341A	**184102290**		63140331A	**184122290**	
Superbike 848 Evo	848	2013	2013	-	63140171A	**184102280**		62640271A	**184122280**	
Superbike 848 Evo Corse Se	848	2013	2013	-	63140171A	**184102280**		62640271A	**184122280**	
Streetfighter 848	850	2012	2012	MF102AA\3AA	63140341A	**184102290**		63140331A	**184122290**	
Superbike 848	850	2008	2009	H600AA\H601AA	63140171A	**184102280**		62640271A	**184122280**	
Superbike 848	850	2010	2010	ZDMH600AA	63140171A	**184102280**		62640271A	**184122280**	
Superbike 848 Evo	850	2011	2012	H602AA	63140171A	**184102280**		62640271A	**184122280**	
Superbike 848 Evo Corse Se	850	2012	2012	H602AA	63140171A	**184102280**		62640271A	**184122280**	
Superbike 848 Hayden	850	2010	2010	-	63140171A	**184102280**		62640271A	**184122280**	
Superbike 851	851	1991	1992	851S3	62610021A	**184122490**		62610021A	**184122490**	
Superbike 888	888	1994	1995	888S	62610021A	**184122490**		62610021A	**184122490**	
Superbike 888 Sp5	888	1993	1993	888S1	62610021A	**184122490**		62610021A	**184122490**	
Monster 900	900	1993	1997	900M	62610021A	**184122490**		62610021A	**184122490**	
Monster 900	900	2002	2002	M200AA	62640351A	**184102300**		62640071A	**184122300**	Anni 2000-2002
Superbike 907 I.E.	900	1990	1993	906PI2	037039345	**184122490**		037039345	**184122490**	
Supersport 900 Ss	900	1991	1997	906SC2	62610021A	**184122490**		62610021A	**184122490**	
Monster S4R	996	2003	2004	M400AA	62640351A	**184102300**		62640071A	**184122300**	
Monster S4R	996	2005	2006	M405AA	62640351A	**184102300**		62640071A	**184122300**	
Superbike 999	998	2003	2003	H400AA	63140171A	**184102280**		62640271A	**184122280**	
Superbike 999	998	2004	2006	H400AE	63140171A	**184102280**		62640271A	**184122280**	
Superbike 999 R	998	2003	2003	H200AA	63140171A	**184102280**		62640271A	**184122280**	
Superbike 999 R	998	2004	2004	H401AA	63140171A	**184102280**		62640271A	**184122280**	
Superbike 999 R	998	2005	2005	H402AA	63140171A	**184102280**		62640271A	**184122280**	
Superbike 999 R	998	2006	2006	H401AA	63140171A	**184102280**		63140191A	**184122280**	
Superbike 999 R Xerox	998	2006	2006	H401AA	63140171A	**184102280**		63140191A	**184122280**	
Superbike 999 S	998	2003	2003	H400AA	63140171A	**184102280**		62640271A	**184122280**	
Superbike 999 S	998	2004	2005	H400AE	63140171A	**184102280**		62640271A	**184122280**	
Superbike 999 S	998	2006	2006	H400AE	63140171A	**184102280**		63140191A	**184122280**	
Superbike 999 S Ama Replica	998	2007	2007	-	63140171A	**184102280**		63140191A	**184122280**	
Monster 1000	1000	2003	2004	M400AA	62640351A	**184102300**		62640071A	**184122300**	
Monster 1000	1000	2005	2005	M404AA	62640351A	**184102300**		62640071A	**184122300**	
Monster 1000 S	1000	2005	2005	M404AA	62640351A	**184102300**		62640071A	**184122300**	
Monster S2R 1000	1000	2006	2008	M416AA	62640351A	**184102300**		62640071A	**184122300**	
Monster S4R	1000	2007	2008	4417AA	63140171A	**184102280**		62640271A	**184122280**	
Monster S4Rs	1000	2006	2008	4417AA	63140171A	**184102280**		63140191A	**184122280**	
Monster S4Rs Tricolore	1000	2008	2008	4417AA	63140171A	**184102280**		63140191A	**184122280**	
Supersport 1000 Ss	1000	2003	2003	V500AA	62640351A	**184102300**		62640071A	**184122300**	
Supersport 1000 Ss	1000	2004	2006	V503AA	62640351A	**184102300**		-	**-**	
Streetfighter S	1098	2013	2013	-	63140341A	**184102290**		63140331A	**184122290**	
Monster 1100	1100	2009	2009	M502AA	63140171A	**184102280**		63140191A	**184122280**	
Monster 1100	1100	2010	2010	M502AA	63140171A	**184102280**		62640271A	**184122280**	
Monster 1100 Abs	1100	2010	2010	M505AA	63140171A	**184102280**		62640271A	**184122280**	



Modello *Model*	CC	Da *From*	A *To*	Telaio *Frame*	OEM Leva sx *Left Lever OEM Number*	Leva sinistra *Left Lever*	Note leva sinistra *Left Lever Notes*	OEM Leva dx *Right Lever OEM Number*	Leva destra *Right Lever*	Note leva destra *Right Lever Notes*
Monster 1100 S	1100	2009	2009	M502AA	63140171A	**184102280**		63140191A	**184122280**	
Monster 1100 S	1100	2010	2010	M502AA	63140171A	**184102280**		62640271A	**184122280**	
Streetfighter	1100	2010	2011	F100AA\F101AA	63140341A	**184102290**		63140331A	**184122290**	
Streetfighter S	1100	2010	2012	F100AA\F101AA	63140341A	**184102290**		63140331A	**184122290**	
Superbike 1098	1100	2007	2008	H700AA	63140341A	**184102290**		63140331A	**184122290**	
Superbike 1098 S	1100	2007	2008	H700AA	63140341A	**184102290**		63140331A	**184122290**	
Superbike 1098 S Tricolore	1100	2007	2008	H700AA	63140341A	**184102290**		63140331A	**184122290**	
Diavel	1200	2011	2011	G100AA\G101AA	63140341A	**184102290**		63140331A	**184122290**	
Diavel	1200	2012	2012	G100AB\G101AB	63140341A	**184102290**		63140331A	**184122290**	
Diavel	1200	2013	2013	-	63140341A	**184102290**		63140331A	**184122290**	
Diavel Amg Europe	1200	2013	2013	-	63140341A	**184102290**		63140331A	**184122290**	
Diavel Carbon	1200	2011	2012	G100AB\G101AB	63140341A	**184102290**		63140331A	**184122290**	
Diavel Carbon	1200	2013	2013	-	63140341A	**184102290**		63140331A	**184122290**	
Diavel Carbon FI	1200	2015	2016	-	63140341A	**184102290**		63140331A	**184122290**	
Diavel Carbon FI	1200	2017	2018	-	62610131A	**184102290**		62610121A	**184122290**	
Diavel Cromo Europe	1200	2013	2013	-	63140341A	**184102290**		63140331A	**184122290**	
Diavel FI	1200	2015	2016	-	63140341A	**184102290**		63140331A	**184122290**	
Diavel FI	1200	2017	2018	-	62610131A	**184102290**		62610121A	**184122290**	
Diavel Strada	1200	2013	2014	-	63140341A	**184102290**		63140331A	**184122290**	
Diavel Titanium	1200	2015	2015	-	63140341A	**184102290**		63140331A	**184122290**	
Diavel White Stripe	1200	2013	2014	-	63140341A	**184102290**		63140331A	**184122290**	
Monster 1200	1200	2014	2015	-	63140341A	**184102290**		63140561A	**184122290**	
Multistrada 1200	1200	2010	2012	A200AA\A201AA	63140341A	**184102290**		63140331A	**184122290**	
Multistrada 1200 Abs	1200	2010	2012	A200AB\A201AB	63140341A	**184102290**		63140331A	**184122290**	
Multistrada 1200 Abs	1200	2013	2016	-	63140341A	**184102290**		63140331A	**184122290**	
Multistrada 1200 Abs	1200	2017	2017	-	63140341A	**184102290**		62610121A	**184122290**	
Multistrada 1200 Abs Sport Pack	1200	2017	2017	-	63140341A	**184102290**		62610121A	**184122290**	
Multistrada 1200 Abs Sport Pack	1200	2018	2018	-	62610131A	**184102290**		62610121A	**184122290**	
Multistrada 1200 Enduro	1200	2016	2017	-	63140341A	**184102290**		63140331A	**184122290**	
Multistrada 1200 Enduro	1200	2018	2018	-	62610131A	**184102290**		62610121A	**184122290**	
Multistrada 1200 Enduro Pro	1200	2018	2018	-	62610131A	**184102290**		62610121A	**184122290**	
Multistrada 1200 Enduro Touring	1200	2016	2017	-	63140341A	**184102290**		63140331A	**184122290**	
Multistrada 1200 Enduro Touring	1200	2018	2018	-	62610131A	**184102290**		62610121A	**184122290**	
Multistrada 1200 S Abs	1200	2010	2010	A200AD	63140341A	**184102290**		63140331A	**184122290**	
Multistrada 1200 S Abs	1200	2015	2017	-	63140341A	**184102290**		63140331A	**184122290**	
Multistrada 1200 S D-Air	1200	2016	2017	-	63140341A	**184102290**		63140331A	**184122290**	
Multistrada 1200 S Gt	1200	2013	2014	-	63140341A	**184102290**		63140331A	**184122290**	
Multistrada 1200 S Pikes Peak	1200	2012	2012	A200AE\A201AE	63140341A	**184102290**		63140331A	**184122290**	
Multistrada 1200 S Pikes Peak	1200	2013	2014	-	63140341A	**184102290**		63140331A	**184122290**	
Multistrada 1200 S Pikes Peak	1200	2016	2017	-	63140341A	**184102290**		63140331A	**184122290**	
Multistrada 1200 S Sport	1200	2011	2012	A200AD\A201AD	63140341A	**184102290**		63140331A	**184122290**	
Multistrada 1200 S Touring	1200	2010	2012	A200AC\A201AC	63140341A	**184102290**		63140331A	**184122290**	



LEVE

LEVERS

Modello *Model*	**CC**	**Da** *From*	**A** *To*	**Telaio** *Frame*	**OEM Leva sx** *Left Lever OEM Number*	**Leva sinistra** *Left Lever*	**Note leva sinistra** *Left Lever Notes*	**OEM Leva dx** *Right Lever OEM Number*	**Leva destra** *Right Lever*	**Note leva destra** *Right Lever Notes*
Multistrada 1200 S Touring	1200	2013	2017	-	63140341A	**184102290**		63140331A	**184122290**	
Multistrada 1200 S Touring D-Air	1200	2014	2014	-	63140341A	**184102290**		63140331A	**184122290**	
Multistrada 1200 Touring	1200	2015	2016	-	63140341A	**184102290**		63140331A	**184122290**	
Multistrada 1200 Touring	1200	2017	2017	-	63140341A	**184102290**		62610121A	**184122290**	
Superbike 1098 R	1200	2008	2009	H702AA	63140341A	**184102290**		63140331A	**184122290**	
Superbike 1098 R Bayliss	1200	2009	2009	H702AA	63140341A	**184102290**		63140331A	**184122290**	
Superbike 1198	1200	2009	2011	H704AA\H705AA	63140341A	**184102290**		63140331A	**184122290**	
Superbike 1198 R	1200	2010	2010	H702A\H703A	63140341A	**184102290**		63140331A	**184122290**	
Superbike 1198 S	1200	2009	2010	H704AA\H705AA	63140341A	**184102290**		63140331A	**184122290**	
Superbike 1198 S Corse	1200	2010	2010	-	63140341A	**184102290**		63140331A	**184122290**	
Superbike 1198 Sp	1200	2011	2011	H704AA\H705AA	63140341A	**184102290**		63140331A	**184122290**	
Xdiavel	1200	2017	2017	-	63140341A	**184102290**		62610121A	**184122290**	
Xdiavel S	1200	2017	2017	-	63140341A	**184102290**		62610121A	**184122290**	
Diavel Diesel	1262	2017	2017	-	62610131A	**184102290**		62610121A	**184122290**	
Multistrada 1260 Abs	1262	2018	2018	-	62610131A	**184102290**		62610121A	**184122290**	
Multistrada 1260 S Abs	1262	2018	2018	-	62610131A	**184102290**		62610121A	**184122290**	
Multistrada 1260 S Touring	1262	2018	2018	-	62610131A	**184102290**		62610121A	**184122290**	
Multistrada 1260 Touring	1262	2018	2018	-	62610131A	**184102290**		62610121A	**184122290**	
Xdiavel	1262	2016	2016	-	63140341A	**184102290**		63140331A	**184122290**	
Xdiavel	1262	2018	2018	-	62610131A	**184102290**		62610121A	**184122290**	
Xdiavel S	1262	2016	2016	-	63140341A	**184102290**		63140331A	**184122290**	
Xdiavel S	1262	2018	2018	-	62610131A	**184102290**		62610121A	**184122290**	
Xdiavel Sport Pack B	1262	2017	2017	-	63140341A	**184102290**		62610121A	**184122290**	
GAS GAS										
Txt Rookie 50-70	50	2002	2003	-	E200701	**184102240**	Standard	R390002PL	**184122020**	
Ec - Mc 125-200-250-300	125	2008	2008	-	BT27922040	**184102250**	Corta	BC250022045	**184122530**	
Ec - Mc 125-200-250-300	125	2010	2010	-	BT27922040	**184102250**	Corta	BC250022045	**184122530**	
Ec - Mc 2T 125-200-250-300	125	2002	2002	-	E200701	**184102240**	Standard	BC250022045	**184122530**	
Ec - Mc 2T 125-200-250-300	125	2002	2002	-	BT27922040	**184102250**	Corta	BC250022045	**184122530**	
Ec - Mc 2T 125-200-250-300	125	2009	2009	-	BT27922040	**184102250**	Corta	BC250022045	**184122530**	
Ec - Mx - Sm 2T 125-200-250-300	125	2003	2006	-	E200701	**184102240**	Standard	BC250022045	**184122530**	
Ec - Mx - Sm 2T 125-200-250-300	125	2003	2006	-	BT27922040	**184102250**	Corta	BC250022045	**184122530**	
Ec - Mx - Sm 2T 125-200-250-300	125	2007	2007	-	BT27922040	**184102250**	Corta	BC250022045	**184122530**	
Ec 125-200-250-300 Sixdays	125	2010	2010	-	BT27922040	**184102250**	Corta	BC250022045	**184122530**	
Ec 125-200-250-300, 250/300E, Sixdays	125	2011	2011	-	BT27922040	**184102250**	Corta	BC250022045	**184122530**	
Ec Racing	125	2014	2015	-	E200701	**184102240**	Standard	BC250022045	**184122530**	
Ec Racing 125	125	2013	2013	-	-	**-**		BC250022045R	**184122530**	
Ec Racing 125-250-300	125	2011	2011	-	BT27922040	**184102250**	Corta	BC250022045	**184122530**	
Enduro Racing 125-250-300	125	2010	2010	-	BT27922040	**184102250**	Corta	BC250022045	**184122530**	
Halley 2T Eh - Sm	125	2009	2009	-	BT27922040	**184102250**	Corta	-	**-**	



Modello *Model*	CC	Da *From*	A *To*	Telaio *Frame*	OEM Leva sx *Left Lever OEM Number*	Leva sinistra *Left Lever*	Note leva sinistra *Left Lever Notes*	OEM Leva dx *Right Lever OEM Number*	Leva destra *Right Lever*	Note leva destra *Right Lever Notes*
Txt 125-200-250-280-320	125	2000	2000	-	E200701	**184102240**	Standard	R390002PL	**184122020**	
Txt 125-200-250-280-320	125	2000	2000	-	BT27922040	**184102250**	Corta	R390002PL	**184122020**	
Txt 125-200-250-280-320	125	2001	2001	-	E200701	**184102240**	Standard	R390002PL	**184122020**	
Txt 125-200-250-280-320	125	2001	2001	-	BT27922040	**184102250**	Corta	R390002PL	**184122020**	
Txt Contact - School 125-250-280	125	2018	2018	-	E200701	**184102240**	Standard	R390002PL	**184122020**	
Txt Pro 125-200-250-280	125	2002	2003	-	BT280222040	**184102540**		R390002PL	**184122020**	
Txt Pro 125-200-250-280-300	125	2005	2010	-	BT280222040	**184102540**		BT27922045	**184122250**	
Txt Pro 125-250-280-300	125	2011	2011	-	BT280222040	**184102540**		BT27922045	**184122250**	
Txt Raga 125-250-280-300	125	2009	2009	-	-	**-**		BT27922045	**184122250**	
Ec 2T 200-250-300	200	2001	2001	-	E200701	**184102240**	Standard	BC250022045	**184122530**	
Ec 2T 200-250-300	200	2001	2001	-	BT27922040	**184102250**	Corta	BC250022045	**184122530**	
Ec 2T 200-250-300	200	2014	2017	-	E200701	**184102240**	Standard	BC250022045	**184122530**	
Ec 250-300	250	2012	2012	-	-	**-**		BC250022045R	**184122530**	
Ec 250-300 Racing	250	2012	2012	-	-	**-**		BC250022045R	**184122530**	
Ec 2T 250-300	250	2013	2013	-	E200701	**184102240**	Standard	BC250022045	**184122530**	
Ec 2T Racing 250-300	250	2013	2013	-	E200701	**184102240**	Standard	BC250022045	**184122530**	
Ec 4T	250	2010	2010	-	BT27922040	**184102250**	Corta	BC250022045	**184122530**	
Ec E 2T 250-300	250	2012	2012	-	-	**-**		BC250022045R	**184122530**	
Ec E 2T Usa 250-300	250	2013	2013	-	-	**-**		BC250022045R	**184122530**	
Ec Replica Giullaume 250-300	250	2012	2012	-	-	**-**		BC250022045R	**184122530**	
Enduro Nambotin Replica 250-300	250	2010	2010	-	BT27922040	**184102250**	Corta	BC250022045	**184122530**	
Replica Cervantes Nambotin 250-300 2T	250	2011	2011	-	-	**-**		BC250022045R	**184122530**	
Txt Raga 250-280-300	250	2010	2010	-	-	**-**		BT27922045	**184122250**	
Txt 280 Pro	280	2003	2014	-	BT613003013	**184122500**		BT613003013	**184122500**	
Ec Replica Factory	300	2014	2014	-	E200701	**184102240**	Standard	BC250022045R	**184122530**	
Fse 400-450	400	2003	2007	-	E200701	**184102240**	Standard	BC250022045R	**184122530**	
Fse 400-450	400	2003	2007	-	BT27922040	**184102250**	Corta	BC250022045R	**184122530**	
Ec - Sm 4T 450-515	450	2009	2009	-	BT27922040	**184102250**	Corta	BC250022045R	**184122530**	
Fsr Ec/Sm	450	2008	2008	-	BT27922040	**184102250**	Corta	BC250022045R	**184122530**	
Pampera	450	2007	2008	-	E200701	**184102240**	Standard	-	**-**	
Pampera	450	2007	2008	-	BT27922040	**184102250**	Corta	-	**-**	
Wild Hp	450	2004	2004	-	E200701	**184102240**	Standard	-	**-**	
Wild Hp	450	2004	2004	-	BT27922040	**184102250**	Corta	-	**-**	
GILERA										
Dna	50	2000	2002	C2700	497031	**184120601**	Brembo	497031	**184120601**	Brembo
Dna	50	2000	2002	C2700	600475	**184120661**	Heng Tong	600475	**184120661**	Heng Tong
Dna	50	2005	2007	C2700	646829	**184120601**	Brembo	646829	**184120601**	Brembo
Dna	50	2005	2007	C2700	600475	**184120661**	Heng Tong	600475	**184120661**	Heng Tong
Dna Gp Experience	50	2003	2004	C2700	497031	**184120601**	Brembo	497031	**184120601**	Brembo
Dna Gp Experience	50	2003	2004	C2700	600475	**184120661**	Heng Tong	600475	**184120661**	Heng Tong
Eaglet	50	1996	1996	50300	951633	**184102510**		344917	**184122030**	
Eaglet Automatico	50	1996	1997	C0900	951633	**184102510**		344917	**184122030**	
Easy Moving	50	1995	1996	SSP2T	564689	**184100111**		494951	**184120231**	
Ice	50	2001	2005	C3000	497172	**184100851**		497031	**184120601**	
Rcr	50	2003	2003	VTHSDR1EB3H	00F00910291	**184102050**		-	**-**	
Rcr	50	2006	2007	-	00F00910291	**184102050**		-	**-**	



LEVE

LEVERS

Modello *Model*	**CC**	**Da** *From*	**A** *To*	**Telaio** *Frame*	**OEM Leva sx** *Left Lever OEM Number*	**Leva sinistra** *Left Lever*	**Note leva sinistra** *Left Lever Notes*	**OEM Leva dx** *Right Lever OEM Number*	**Leva destra** *Right Lever*	**Note leva destra** *Right Lever Notes*
Runner	50	1997	2000	C1400	-	**-**		494952	**184120111**	Grimeca
Runner Purejet	50	2005	2007	C46200	497042	**184120711**	Heng Tong	497042	**184120711**	Heng Tong
Runner Purejet	50	2010	2011	C46200	497042	**184120711**	Heng Tong	497042	**184120711**	Heng Tong
Runner Sp	50	2005	2006	C46100	497042	**184120711**	Heng Tong	497042	**184120711**	Heng Tong
Runner Sp Special Edition	50	2007	2007	C46100	497042	**184120711**	Heng Tong	497042	**184120711**	Heng Tong
Smt	50	2003	2003	VTHSDR1FB3H	00F00910291	**184102050**		-	**-**	
Smt	50	2006	2006	G12D1	00F00910291	**184102050**		-	**-**	
Smt	50	2013	2017	ABB01	00F00910291	**184102050**		-	**-**	
Smt (Aus-Fra-Fin)	50	2011	2012	ABB00	00F00910291	**184102050**		-	**-**	
Stalker	50	1997	2004	C1300	564682	**184100531**		-	**-**	
Stalker	50	2005	2011	C40100	564682	**184100531**		-	**-**	
Stalker Naked	50	2008	2008	C40102	647552	**184100851**		600475	**184120661**	Heng Tong
Stalker Special Edition	50	2007	2008	C40100	564682	**184100531**		-	**-**	
Storm	50	1994	1995	TEC1T	564689	**184100111**		564690	**184120091**	
Storm Euro2	50	2007	2007	C29000	564683	**184100601**		497042	**184120711**	Heng Tong
Storm Euro2	50	2007	2007	C29000	497042	**184120711**	Heng Tong	497042	**184120711**	Heng Tong
Typhoon	50	1994	1997	TEC1T	564689	**184100111**		564690	**184120091**	
Typhoon X	50	1998	1999	TEC2T	564689	**184100111**		564690	**184120091**	
Typhoon Xr	50	2000	2000	C1900	564689	**184100111**		564690	**184120091**	
Dna 125-180	125	2001	2001	M2600	497031	**184120601**	Brembo	497031	**184120601**	Brembo
Nexus Euro3	125	2007	2008	M35500	600475	**184120661**	Heng Tong	600475	**184120661**	Heng Tong
Nexus Euro3 Ie	125	2008	2010	M35700	600475	**184120661**	Heng Tong	600475	**184120661**	Heng Tong
Runner Fx-Fxr 125-180	125	1997	2002	M070\080	564683	**184100601**		497042	**184120711**	Heng Tong
Runner Fx-Fxr 125-180	125	1997	2002	M070\080	497042	**184120711**	Heng Tong	497042	**184120711**	Heng Tong
Runner Vx	125	2005	2006	M46100	497042	**184120711**	Heng Tong	497042	**184120711**	Heng Tong
Runner Vx 4T Euro3	125	2006	2007	M46300	497042	**184120711**	Heng Tong	497042	**184120711**	Heng Tong
Runner Vx Race	125	2006	2006	M46100	497042	**184120711**	Heng Tong	497042	**184120711**	Heng Tong
Runner Vx Sc	125	2006	2007	M46100	497042	**184120711**	Heng Tong	497042	**184120711**	Heng Tong
Runner Vx-Vxr 125-180	125	2000	2001	M2400	497042	**184120711**	Heng Tong	497042	**184120711**	Heng Tong
Sc	125	2006	2006	VTHGS1A1A	00H00904291	**184102010**		-	**-**	
Typhoon	125	1995	1998	M0200	-	**-**		271449	**184120101**	
Typhoon X-Xr	125	1999	2000	M0200	-	**-**		271449	**184120101**	
Dna 125-180	180	2001	2001	M2600	497031	**184120601**	Brembo	497031	**184120601**	Brembo
Runner Fx-Fxr 125-180	180	1997	2002	M070\080	564683	**184100601**		497042	**184120711**	Heng Tong
Runner Fx-Fxr 125-180	180	1997	2002	M070\080	497042	**184120711**	Heng Tong	497042	**184120711**	Heng Tong
Runner Vx-Vxr 125-180	180	2000	2001	M2400	497042	**184120711**	Heng Tong	497042	**184120711**	Heng Tong
Runner Vxr	200	2005	2006	M46200	497042	**184120711**	Heng Tong	497042	**184120711**	Heng Tong
Runner Vxr 4T St Euro3	200	2008	2011	M46401	497042	**184120711**	Heng Tong	497042	**184120711**	Heng Tong
Runner Vxr Euro3	200	2007	2007	M46400	497042	**184120711**	Heng Tong	497042	**184120711**	Heng Tong
Runner Vxr Race	200	2005	2006	M46200	497042	**184120711**	Heng Tong	497042	**184120711**	Heng Tong
Runner Vx-Vxr 125-200	200	2002	2004	M240\241\243	497042	**184120711**	Heng Tong	497042	**184120711**	Heng Tong
Nexus Euro3	250	2006	2006	M35300	600475	**184120661**	Heng Tong	600475	**184120661**	Heng Tong
Nexus Euro3	250	2007	2007	M35400	600475	**184120661**	Heng Tong	600475	**184120661**	Heng Tong
Nexus Sp Euro3	250	2006	2007	M35300	600475	**184120661**	Heng Tong	600475	**184120661**	Heng Tong
Nexus Euro3	300	2008	2011	M35600	600475	**184120661**	Heng Tong	-	**-**	
Fuoco 4T-4V Ie E3 Lt	500	2013	2014	M61100	600475	**184120661**	Heng Tong	646829	**184120601**	Brembo
Fuoco Euro3	500	2007	2013	M61100	600475	**184120661**	Heng Tong	646829	**184120601**	Brembo
Nexus	500	2003	2005	M35100	497031	**184120601**	Brembo	-	**-**	-
Nexus Euro3	500	2006	2011	M35200	646829	**184120601**	Brembo	646829	**184120601**	Brembo
Nexus Sp Euro3	500	2006	2007	M35200	646829	**184120601**	Brembo	646829	**184120601**	Brembo
Gp	800	2009	2011	M55100	-	**-**		649165	**184122430**	



Modello *Model*	CC	Da *From*	A *To*	Telaio *Frame*	OEM Leva sx *Left Lever OEM Number*	Leva sinistra *Left Lever*	Note leva sinistra *Left Lever Notes*	OEM Leva dx *Right Lever OEM Number*	Leva destra *Right Lever*	Note leva destra *Right Lever Notes*
HARLEY DAVIDSON										
Xl 883 L Sportster Super Low	883	2011	2014	CR2	4694507A	**184102480**		4694606A	**184122440**	
Xl 883 L Sportster Super Low Abs	883	2015	2015	CR2	4694507A	**184102480**		-	**-**	
Xl 883 L Sportster Super Low Abs	883	2016	2016	-	4694507A	**184102480**		-	**-**	
Xl 883 N Sportster Iron	883	2009	2014	LE2	4694507A	**184102480**		4694606A	**184122440**	
Xl 883 N Sportster Iron Abs	883	2014	2014	LE2	4694507A	**184102480**		4694606A	**184122440**	
Xl 883 N Sportster Iron Abs	883	2015	2015	LE2	4694507A	**184102480**		-	**-**	
Xl 883 N Sportster Iron Abs	883	2016	2016	-	4694507A	**184102480**		-	**-**	
Xl 883 R Sportster	883	2002	2003	CKM	4694507A	**184102480**		4694606A	**184122440**	
Xl 883 R Sportster Roadster	883	2007	2014	CS2	4694507A	**184102480**		4694606A	**184122440**	
Xl 883 R Sportster Roadster Abs	883	2015	2015	CS2	4694507A	**184102480**		-	**-**	
Xl 883 R Sportster Roadster Race Replica	883	2006	2006	CKM	4694507A	**184102480**		4694606A	**184122440**	
Xl 1200 N Sportster Nightster	1200	2008	2012	CZ3	4694507A	**184102480**		4694606A	**184122440**	
Xl 1200 X Sportster Forty Eight	1200	2010	2014	LC3	4694507A	**184102480**		4694606A	**184122440**	
Xl 1200 X Sportster Forty Eight Abs	1200	2015	2015	LC3	4694507A	**184102480**		-	**-**	
Xl 1200 X Sportster Forty Eight Abs	1200	2016	2016	-	4694507A	**184102480**		-	**-**	
HM										
Cre Six, Baja, Derapage	50	2001	2005	-	-	**-**		K01300120	**184122450**	
HM-MOTO/VENT-MOTO										
Cre F 250 X Ie	250	2007	2008	F25XJEC	-	**-**		SM27108	**184122530**	
Cre F 290 X Ie	290	2007	2008	F29XJEC	-	**-**		SM27108	**184122530**	
HONDA										
Px 25 Ms	25	1984	1984	AB06-S	-	**184100391**		-	**-**	
Pxr 25 Ms	25	1984	1984	AB06-S	53175-GR2-010	**184102130**		-	**-**	
C 50 La Cub	50	1986	1986	C50	53175-GR2-010	**184102130**		-	**-**	
C 50 S Cub	50	1992	1992	C50	53175-GR2-010	**184102130**		-	**-**	
C 50 Sw Cub	50	1994	1994	C50	53175-GR2-010	**184102130**		-	**-**	
Crf 50 F	50	2005	2009	AE03A	53175-GR2-010	**184102130**		-	**-**	
Crf 50 F	50	2012	2012	AE03A	53175-GR2-010	**184102130**		-	**-**	
Crf 50 F	50	2013	2013	AE04A	53175-GR2-010	**184102130**		-	**-**	
Mt 50 S	50	1980	1982	AD01	53190-443-610	**184102440**		-	**-**	
Pk 50 Sm Wallaroo	50	1994	1997	AB25	-	**184100391**		-	**-**	
Qr 50	50	1985	1996	AE01	-	**184100391**		-	**-**	
Qr 50	50	1997	1997	AE01A	-	**184100391**		-	**-**	
Sa 50 Vision	50	1991	1995	AF29	-	**184100391**		-	**-**	
Sfx 50	50	1996	2000	AF37A	-	**184100391**		-	**-**	
Sgx 50 Sky	50	1997	2000	AF43G	53178-GCG-930	**184100371**		53175-GCG-930	**184120421**	
Sh 50	50	1984	1995	AF40A	53178-GW2-900	**184100341**		-	**-**	
Sh 50 Scoopy	50	1996	2000	AF40A	-	**184100381**		-	**184120431**	
Sj 50 Bali	50	1995	1995	AF323	53178-GW2-900	**184100341**		53175-GAV-700	**184120441**	
Sj 50 Bali	50	1996	2001	AF32E	53178-GW2-900	**184100341**		53175-GAV-700	**184120441**	
Srx 50 Shadow	50	1998	1999	AF42B	-	**-**		53175-MR1-671	**184120741**	
St 50 Dax	50	1988	1995	AB23	53175-GR2-010	**184102130**		-	**-**	
St 50 Dax	50	1996	2000	AB23A	53175-GR2-010	**184102130**		-	**-**	
Xr 50 R	50	2003	2004	AE03A	53175-GR2-010	**184102130**		-	**-**	
Z 50 J Monkey	50	1985	1985	AB02	53175-GR2-010	**184102130**		-	**-**	



LEVE

LEVERS

Modello *Model*	**CC**	**Da** *From*	**A** *To*	**Telaio** *Frame*	**OEM Leva sx** *Left Lever OEM Number*	**Leva sinistra** *Left Lever*	**Note leva sinistra** *Left Lever Notes*	**OEM Leva dx** *Right Lever OEM Number*	**Leva destra** *Right Lever*	**Note leva destra** *Right Lever Notes*
Z 50 R Cross Monkey	50	1986	1986	AB020	53175-GR2-010	**184102130**		-	-	
C 70 Cw Cub	70	1994	1994	C70	53175-GR2-010	**184102130**		-	-	
Crf 70 F	70	2010	2012	DE02A	53175-GR2-010	**184102130**		-	-	
Cr 80 Rb 19 Inch Wheel	80	1996	2002	HE04A	53178-MAC-740	**184102060**		-	-	
Mt 80 S	80	1980	1982	HD02	53190-443-610	**184102440**		-	-	
Cr 85 R	85	2003	2008	HE07A	53178-MAC-740	**184102060**		53170-MEB-003	**184122530**	
Cr 85 Rb 19 Inch Wheel	85	2003	2008	HE07A	53178-MAC-740	**184102060**		53170-MEB-003	**184122530**	
C 90 Cub	90	1982	1993	HA02	53175-GR2-010	**184102130**		-	-	
C 90 Cub	90	1996	1996	HA02B	53175-GR2-010	**184102130**		-	-	
C 90 Cw Cub	90	1994	1994	C90	53175-GR2-010	**184102130**		-	-	
C 90 Cw Cub	90	1997	1997	C90	53175-GR2-010	**184102130**		-	-	
C 90 M Cub	90	1985	1986	HA02	53175-GR2-010	**184102130**		-	-	
C 90 M Cub	90	1992	1993	HA02	53175-GR2-010	**184102130**		-	-	
C 90 M Cub	90	1996	1996	HA02A	53175-GR2-010	**184102130**		-	-	
Srx 90 It Shadow	90	1998	2000	HF09A	-	**-**		53175-MR1-671	**184120741**	
Sj 100 Bali Ex	100	1996	2000	HF07A	53178-GW2-900	**184100341**		53175-GAV-700	**184120441**	
Ca 125 Rebel	125	1995	1995	JC24	53178-KV0-000	**184102520**		-	-	
Ca 125 Rebel 80 Km/h	125	1995	1995	JC24	53178-KV0-000	**184102520**		-	-	
Cb 125 T2 Twin	125	1979	1986	CB125T	53190-443-610	**184102440**		-	-	
Cb 125 Td	125	1982	1982	JC06	53190-443-610	**184102440**		-	-	
Cbf 125 M	125	2009	2016	JC40A	-	**-**		53175-KK4-010	**184122560**	
Cbr 125 R	125	2004	2005	JC34A	-	**-**		53175-KPK-901	**184122410**	
Cbr 125 Rs Repsol	125	2005	2007	JC34A	-	**-**		53175-KPK-901	**184122410**	
Cbr 125 Rw	125	2005	2006	JC34A	-	**-**		53175-KPK-901	**184122410**	
Cbr 125 Rw	125	2007	2010	JC39A	-	**-**		53175-KPK-901	**184122410**	
Cbr 125 Rw 80 Km/h	125	2007	2010	JC39B	-	**-**		53175-KPK-901	**184122410**	
Cm 125 C Custom	125	1982	1983	JC05	53190-443-610	**184102440**		-	-	
Cr 125 R	125	1996	2003	JE01A	53178-MAC-740	**184102060**		53170-MEB-003	**184122530**	
Cr 125 R	125	2004	2007	JE01A	-	**-**		53170-MEB-003	**184122530**	
Fes 125 Pantheon	125	1998	2002	JF05A	53178-KFG-006	**184100451**		53175-KAB-000	**184120551**	
Nes 125 @/ Arobase	125	2000	2000	JF07A	53178-GCS-000	**184100441**		53175-GCS-006	**184120541**	
Nes 125 @/ Arobase	125	2001	2002	JF07B	53178-GCS-000	**184100441**		53175-GCS-006	**184120541**	
Pcx 125 Ww125Ex2	125	2010	2014	JF28A	53178-KWN-930	**184102470**		-	-	
Pes 125 Ps I	125	2006	2013	JF17A	53178-GCS-000	**184100441**		53175-GCS-006	**184120541**	
Ses 125 Dylan	125	2002	2006	JF10A	53178-GCS-000	**184100441**		53175-GCS-006	**184120541**	
Sh 125	125	2001	2004	JF09A	53178-GCS-000	**184100441**		53175-GCS-006	**184120541**	
Sh 125 A i ABS	125	2013	2016	JF41B	53178-MCT-006	**184100611**		53175-KM9-006	**184120741**	
Sh 125 A i ABS	125	2016	2016	JF41A	53178-MCT-006	**184100611**		53175-KM9-006	**184120741**	
Sh 125 AD i ABS	125	2013	2015	JF41D	53178-MCT-006	**184100611**		53175-KM9-006	**184120741**	
Sh 125 AD i ABS	125	2016	2016	JF41B	53178-MCT-006	**184100611**		53175-KM9-006	**184120741**	
Sh 125 D I	125	2009	2013	JF23A	53178-MCT-006	**184100611**		53175-KM9-006	**184120741**	
Sh 125 I	125	2005	2008	JF14A	53178-GCS-000	**184100441**		53175-GCS-006	**184120541**	
Sh 125 i	125	2009	2012	JF23B	53178-MCT-006	**184100611**		53175-KM9-006	**184120741**	
Sh 125 i	125	2013	2013	JF23A	53178-MCT-006	**184100611**		53175-KM9-006	**184120741**	
Sh 125 i	125	2016	2016	JF41A	53178-MCT-006	**184100611**		53175-KM9-006	**184120741**	
Vt 125 C Shadow	125	1999	2000	JC29A	53178-KV0-000	**184102520**		53175-MR1-671	**184120741**	
Vt 125 C Shadow	125	2001	2008	JC31A	53178-KV0-000	**184102520**		53175-MR1-671	**184120741**	
Vt 125 C Shadow 80 Km/h	125	1999	2000	JC29B	53178-KV0-000	**184102520**		53175-MR1-671	**184120741**	
Vt 125 C Shadow 80 Km/h	125	2001	2005	JC31A	53178-KV0-000	**184102520**		53175-MR1-671	**184120741**	
Vt 125 C2 Shadow	125	2000	2000	JC29A	53178-KV0-000	**184102520**		53175-MR1-671	**184120741**	
Vt 125 C2 Shadow	125	2001	2002	JC31A	53178-KV0-000	**184102520**		53175-MR1-671	**184120741**	
Vt 125 C2 Shadow 80 Km/h	125	2000	2000	JC29B	53178-KV0-000	**184102520**		53175-MR1-671	**184120741**	



Modello *Model*	CC	Da *From*	A *To*	Telaio *Frame*	OEM Leva sx *Left Lever OEM Number*	Leva sinistra *Left Lever*	Note leva sinistra *Left Lever Notes*	OEM Leva dx *Right Lever OEM Number*	Leva destra *Right Lever*	Note leva destra *Right Lever Notes*
Vt 125 C2 Shadow 80 Km/h	125	2001	2002	JC31A	53178-KV0-000	**184102520**		53175-MR1-671	**184120741**	
Xl 125 V Varadero	125	2001	2003	JC32A	-	**-**		53175-KK4-010	**184122560**	
Xl 125 V Varadero	125	2004	2008	JC32A	53178-MAN-600	**184102070**		53175-KK4-010	**184122560**	
Xl 125 V Varadero	125	2009	2010	JC32A	53178-MAN-600	**184102070**		-	**-**	
Xl 125 V Varadero	125	2011	2013	JC49A	53178-MAN-600	**184102070**		-	**-**	
Xl 125 V Varadero 80 Km/h	125	2001	2001	JC32C	-	**-**		53175-KK4-010	**184122560**	
Xl 125 V Varadero 80 Km/h	125	2002	2002	JC32A	-	**-**		53175-KK4-010	**184122560**	
Xl 125 V Varadero 80 Km/h	125	2003	2003	JC32C	-	**-**		53175-KK4-010	**184122560**	
Xl 125 V Varadero 80 Km/h	125	2004	2008	JC32A	53178-MAN-600	**184102070**		53175-KK4-010	**184122560**	
Crf 150 R 17 Und 14 ´	150	2007	2013	KE03A	53178-MAC-740	**184102060**		-	**-**	
Crf 150 Rb 19 Und 16 ´	150	2007	2008	KE03B	53178-MAC-740	**184102060**		-	**-**	
Crf 150 Rb 19 Und 16 ´	150	2009	2013	KE03A	53178-MAC-740	**184102060**		-	**-**	
Nes 150 @/ Arobase	150	2000	2000	KF03A	53178-GCS-000	**184100441**		53175-GCS-006	**184120541**	
Nes 150 @/ Arobase	150	2001	2001	KF03B	53178-GCS-000	**184100441**		53175-GCS-006	**184120541**	
Nes 150 @/ Arobase	150	2002	2006	KF03A	53178-GCS-000	**184100441**		53175-GCS-006	**184120541**	
Pes 150 Ps I	150	2006	2010	KF09A	53178-GCS-000	**184100441**		53175-GCS-006	**184120541**	
Sh 150	150	2001	2004	KF04A	53178-GCS-000	**184100441**		53175-GCS-006	**184120541**	
Sh 150 A i ABS	150	2013	2016	KF13B	53178-MCT-006	**184100611**		53175-KM9-006	**184120741**	
Sh 150 D I	150	2009	2011	KF10A	53178-MCT-006	**184100611**		53175-KM9-006	**184120741**	
Sh 150 I	150	2005	2008	KF08A	53178-GCS-000	**184100441**		53175-GCS-006	**184120541**	
Xl 185 S	185	1980	1983	L185S	53190-443-610	**184102440**		-	**-**	
Cb 250 N Euro	250	1978	1981	CB250N	53190-443-610	**184102440**		-	**-**	
Cb 250 Nd Euro	250	1982	1983	CB250N	53190-443-610	**184102440**		-	**-**	
Cb 250 Rs	250	1980	1981	MC02	53190-443-610	**184102440**		-	**-**	
Cb 250 Rsz	250	1982	1984	MC02	53190-443-610	**184102440**		-	**-**	
Cb 250 Two-Fifty	250	1996	1998	MC26B	53190-443-610	**184102440**		53175-MK7-671	**184122050**	
Cbf 250	250	2004	2006	MC35A	53190-443-610	**184102440**		53175-KK4-010	**184122560**	
Cbr 250 R	250	2011	2014	MC41A	53178-KV0-000	**184102520**		-	**-**	
Cl 250 S Scrambler	250	1982	1983	MD04	53190-443-610	**184102440**		-	**-**	
Cm 250 C Custom	250	1982	1983	MC06	53190-443-610	**184102440**		-	**-**	
Cr 250 R	250	1996	2003	ME03A	53178-MAC-740	**184102060**		53170-MEB-003	**184122530**	
Cr 250 R	250	2004	2007	ME03A	-	**-**		53170-MEB-003	**184122530**	
Crf 250 R	250	2004	2006	ME10A	-	**-**		53170-MEB-003	**184122530**	
Crf 250 X	250	2004	2007	ME11A	-	**-**		53170-MEB-003	**184122530**	
Fes 250 Foresight	250	1998	1999	MF04A	53178-KFG-006	**184100451**		53175-KAB-000	**184120551**	
Fes 250 Foresight	250	2000	2000	MF05A	53178-KFG-006	**184100451**		53175-KAB-000	**184120551**	
Nss 250 A Forza Abs	250	2008	2011	MF10B	53178-MCT-006	**184100611**		53175-MR1-671	**184120741**	
Nss 250 Ex Forza Abs	250	2005	2013	MF08B	53178-MCT-006	**184100611**		53175-MR1-671	**184120741**	
Nx 250	250	1988	1992	MD21	-	**-**		53175-MR1-671	**184120741**	
Nx 250	250	1990	1995	MD25	-	**-**		53175-MR1-671	**184120741**	
Vtr 250	250	2009	2011	MC33A	53178-KV0-000	**184102520**		53175-MR1-671	**184120741**	
Xl 250 S	250	1980	1982	L250S	53190-443-610	**184102440**		-	**-**	
Sh 300 A I Abs	300	2007	2010	NF02B	53178-MCT-006	**184100611**		53175-MR1-671	**184120741**	
Sh 300 A I Abs	300	2011	2013	NF02D	53178-MCT-006	**184100611**		53175-MR1-671	**184120741**	
Sh 300 I	300	2008	2010	NF02A	53178-MCT-006	**184100611**		53175-MR1-671	**184120741**	
Cb 400 N Euro	400	1978	1985	CB400N	53190-443-610	**184102440**		-	**-**	
Cb-1 400 F	400	1989	1990	NC270	-	**-**		53175-MR1-671	**184120741**	
Cb-1 400 F	400	1989	1990	NC271	-	**-**		53175-MR1-671	**184120741**	
Cm 400 T	400	1980	1981	NC01	53190-443-610	**184102440**		-	**-**	
Cm 400 T Custom	400	1982	1983	NC01	53190-443-610	**184102440**		-	**-**	
Fjs 400 A Sw-T Abs	400	2009	2016	NF03B	53178-MCT-006	**184100611**		53175-MR1-671	**184120741**	



LEVE

LEVERS

Modello *Model*	**CC**	**Da** *From*	**A** *To*	**Telaio** *Frame*	**OEM Leva sx** *Left Lever OEM Number*	**Leva sinistra** *Left Lever*	**Note leva sinistra** *Left Lever Notes*	**OEM Leva dx** *Right Lever OEM Number*	**Leva destra** *Right Lever*	**Note leva destra** *Right Lever Notes*
Fjs 400 D Sw-T	400	2009	2013	NF03A	53178-MCT-006	**184100611**		53175-MR1-671	**184120741**	
Ns 400 R	400	1985	1986	NC19	53178-KV3-000	**184102150**		53175-MR1-671	**184120741**	
Rvf 400 R	400	1994	1996	NC35	53178-KV3-000	**184102150**		53170-KV0-006	**184122080**	
Vfr 400 R	400	1989	1989	NC30	53178-KV3-000	**184102150**		53170-KV0-006	**184122080**	
Vfr 400 RIII	400	1990	1991	NC30	53178-KV3-000	**184102150**		53170-KV0-006	**184122080**	
Cb 450 N	450	1985	1985	PC14	53190-443-610	**184102440**		-	**-**	
Cmx 450 C Rebel	450	1987	1987	PC170	53178-KV3-000	**184102150**		53175-MR1-671	**184120741**	
Cmx 450 C Rebel	450	1987	1987	PC171	53178-KV3-000	**184102150**		53175-MR1-671	**184120741**	
Crf 450 R	450	2002	2004	PE05A	53178-MAC-740	**184102060**		53170-MEB-003	**184122530**	
Crf 450 R	450	2005	2006	PE05A	-	**-**		53170-MEB-003	**184122530**	
Crf 450 X	450	2005	2018	PE06A	-	**-**		53170-MEB-003	**184122530**	
Cb 500	500	1994	1995	PC26	53178-KV0-000	**184102520**		53175-MR1-671	**184120741**	
Cb 500	500	1996	1996	PC32A	53178-KV0-000	**184102520**		53175-MR1-671	**184120741**	
Cb 500	500	1996	1996	PC32B	53178-KV0-000	**184102520**		53175-MR1-671	**184120741**	
Cb 500	500	1996	1996	PC32C	53178-KV0-000	**184102520**		53175-MR1-671	**184120741**	
Cbf 500	500	2004	2008	PC39C	53178-KV0-000	**184102520**		53170-MBR-J11	**184122180**	
Cbf 500	500	2004	2008	PC39D	53178-KV0-000	**184102520**		53170-MBR-J11	**184122180**	
Cbf 500 A Abs	500	2004	2008	PC39A	53178-KV0-000	**184102520**		53170-MBR-J11	**184122180**	
Cbf 500 A Abs	500	2004	2008	PC39B	53178-KV0-000	**184102520**		53170-MBR-J11	**184122180**	
Cr 500 R	500	1996	2001	PE02A	53178-MAC-740	**184102060**		-	**-**	
Cx 500	500	1980	1983	CX500	53190-443-610	**184102440**		-	**-**	
Cx 500 C	500	1980	1981	PC01	53190-443-610	**184102440**		-	**-**	
Cx 500 C Custom	500	1982	1984	PC01	53190-443-610	**184102440**		-	**-**	
Gb 500 Clubman	500	1989	1990	PC16	53178-KV3-000	**184102150**		53175-MR1-671	**184120741**	
Xl 500 S	500	1979	1982	PD01	53190-443-610	**184102440**		-	**-**	
Cb 600 F Hornet	600	1998	2001	PC34A	53178-KV0-000	**184102520**		53170-MBW-006	**184122170**	
Cb 600 F Hornet	600	1998	2001	PC34B	53178-KV0-000	**184102520**		53170-MBW-006	**184122170**	
Cb 600 F Hornet	600	1998	2001	PC34D	53178-KV0-000	**184102520**		53170-MBW-006	**184122170**	
Cb 600 F Hornet	600	2002	2006	PC36A	53178-KV0-000	**184102520**		53170-MBW-006	**184122170**	
Cb 600 F Hornet	600	2002	2006	PC36B	53178-KV0-000	**184102520**		53170-MBW-006	**184122170**	
Cb 600 F Hornet	600	2002	2006	PC36D	53178-KV0-000	**184102520**		53170-MBW-006	**184122170**	
Cb 600 F Hornet	600	2007	2010	PC41A	53178-MFG-D01	**184102260**		53170-MBR-J11	**184122180**	
Cb 600 F Hornet	600	2007	2010	PC41B	53178-MFG-D01	**184102260**		53170-MBR-J11	**184122180**	
Cb 600 Fa Hornet Abs	600	2007	2010	PC41C	53178-MFG-D01	**184102260**		53170-MBR-J11	**184122180**	
Cb 600 Fa Hornet Abs	600	2007	2010	PC41D	53178-MFG-D01	**184102260**		53170-MBR-J11	**184122180**	
Cb 600 Fa Hornet Abs	600	2011	2012	PC41F	53178-MFG-D01	**184102260**		53170-MEJ-006	**184122270**	
Cb 600 Fa Hornet Abs	600	2011	2012	PC41H	53178-MFG-D01	**184102260**		53170-MEJ-006	**184122270**	
Cb 600 Fa Hornet Abs	600	2013	2015	PC4151	53178-MFG-D01	**184102260**		53170-MEJ-006	**184122270**	
Cb 600 S F2 Hornet S	600	2000	2001	PC34E	53178-KV0-000	**184102520**		53170-MBW-006	**184122170**	
Cb 600 S F2 Hornet S	600	2000	2001	PC34F	53178-KV0-000	**184102520**		53170-MBW-006	**184122170**	
Cb 600 S F2 Hornet S	600	2000	2001	PC34H	53178-KV0-000	**184102520**		53170-MBW-006	**184122170**	
Cb 600 S F2 Hornet S	600	2002	2003	PC36E	53178-KV0-000	**184102520**		53170-MBW-006	**184122170**	
Cb 600 S F2 Hornet S	600	2002	2003	PC36F	53178-KV0-000	**184102520**		53170-MBW-006	**184122170**	
Cb 600 S F2 Hornet S	600	2002	2003	PC36H	53178-KV0-000	**184102520**		53170-MBW-006	**184122170**	
Cbf 600 N	600	2004	2007	PC38E	53178-KV0-000	**184102520**		53170-MBR-J11	**184122180**	
Cbf 600 N	600	2004	2007	PC38G	53178-KV0-000	**184102520**		53170-MBR-J11	**184122180**	
Cbf 600 N	600	2008	2009	PC43E	53178-MFG-D01	**184102260**		53170-MBR-J11	**184122180**	
Cbf 600 N	600	2008	2009	PC43G	53178-MFG-D01	**184102260**		53170-MBR-J11	**184122180**	
Cbf 600 N	600	2010	2010	PC43E	53178-MFG-D01	**184102260**		53170-MEJ-006	**184122270**	
Cbf 600 N	600	2010	2010	PC43G	53178-MFG-D01	**184102260**		53170-MEJ-006	**184122270**	



Modello *Model*	CC	Da *From*	A *To*	Telaio *Frame*	OEM Leva sx *Left Lever OEM Number*	Leva sinistra *Left Lever*	Note leva sinistra *Left Lever Notes*	OEM Leva dx *Right Lever OEM Number*	Leva destra *Right Lever*	Note leva destra *Right Lever Notes*
Cbf 600 Na Abs	600	2008	2009	PC43F	53178-MFG-D01	**184102260**		53170-MBR-J11	**184122180**	
Cbf 600 Na Abs	600	2008	2009	PC43H	53178-MFG-D01	**184102260**		53170-MBR-J11	**184122180**	
Cbf 600 Na Abs	600	2010	2012	PC43H	53178-MFG-D01	**184102260**		53170-MEJ-006	**184122270**	
Cbf 600 Na Abs	600	2010	2013	PC43F	53178-MFG-D01	**184102260**		53170-MEJ-006	**184122270**	
Cbf 600 S	600	2004	2007	PC38A	53178-KV0-000	**184102520**		53170-MBR-J11	**184122180**	
Cbf 600 S	600	2004	2007	PC38C	53178-KV0-000	**184102520**		53170-MBR-J11	**184122180**	
Cbf 600 S	600	2008	2009	PC43A	53178-MFG-D01	**184102260**		53170-MBR-J11	**184122180**	
Cbf 600 S	600	2008	2009	PC43C	53178-MFG-D01	**184102260**		53170-MBR-J11	**184122180**	
Cbf 600 S	600	2010	2010	PC43A	53178-MFG-D01	**184102260**		53170-MEJ-006	**184122270**	
Cbf 600 S	600	2010	2010	PC43C	53178-MFG-D01	**184102260**		53170-MEJ-006	**184122270**	
Cbf 600 Sa Abs	600	2008	2009	PC43B	53178-MFG-D01	**184102260**		53170-MBR-J11	**184122180**	
Cbf 600 Sa Abs	600	2008	2009	PC43D	53178-MFG-D01	**184102260**		53170-MBR-J11	**184122180**	
Cbf 600 Sa Abs	600	2010	2013	PC43B	53178-MFG-D01	**184102260**		53170-MEJ-006	**184122270**	
Cbf 600 Sa Abs	600	2010	2013	PC43D	53178-MFG-D01	**184102260**		53170-MEJ-006	**184122270**	
Cbr 600 F	600	1987	1988	PC19	53178-KV3-000	**184102150**		53175-MR1-671	**184120741**	
Cbr 600 F	600	1989	1998	-	53178-KV3-000	**184102150**		53170-KV0-006	**184122080**	
Cbr 600 F	600	1999	2007	-	53178-KV0-000	**184102520**		53170-MBW-006	**184122170**	
Cbr 600 F	600	2011	2013	PC41J	53178-MFG-D01	**184102260**		53170-MEJ-006	**184122270**	
Cbr 600 Fa Abs	600	2011	2013	PC41K	53178-MFG-D01	**184102260**		53170-MEJ-006	**184122270**	
Cbr 600 Fr Rossi	600	2001	2002	PC35H	53178-KV3-000	**184102150**		53170-MBW-006	**184122170**	
Cbr 600 Fs Sport	600	2001	2002	PC35H	53178-KV3-000	**184102150**		53170-MBW-006	**184122170**	
Cbr 600 Rr	600	2003	2006	PC37B	53178-MFG-D01	**184102260**		53170-MEE-006	**184122580**	
Cbr 600 Rr	600	2004	2005	PC37A	53178-MFG-D01	**184102260**		53170-MEE-006	**184122580**	
Cbr 600 Rr	600	2007	2008	PC40A	53178-MFG-D01	**184102260**		53170-MEL-006	**184122590**	
Cbr 600 Rr	600	2009	2012	PC40C	53178-MFG-D01	**184102260**		53170-MEL-006	**184122590**	
Cbr 600 Rr	600	2012	2016	PC40C	53182-MEE-000	**184102260**		53170-MEL-006	**184122590**	
Cbr 600 Rra Abs	600	2009	2012	PC40E	53178-MFG-D01	**184102260**		53170-MEL-006	**184122590**	
Cbr 600 Rra Abs	600	2012	2016	PC40E	53182-MEE-000	**184102260**		53170-MEL-006	**184122590**	
Fjs 600 A Silver Wing Abs	600	2003	2006	PF01B	53178-MCT-006	**184100611**		53175-MR1-671	**184120741**	
Fjs 600 D Silver Wing	600	2003	2006	PF01A	53178-MCT-006	**184100611**		53175-MR1-671	**184120741**	
Fjs 600 Silver Wing	600	2001	2002	PF01A	53178-MCT-006	**184100611**		53175-MR1-671	**184120741**	
Vt 600 C Shadow	600	1989	1995	PC21	-	**-**		53175-MR1-671	**184120741**	
Vt 600 C Shadow	600	1996	2000	PC21B	-	**-**		53175-MR1-671	**184120741**	
Vt 600 C Shadow	600	1996	2000	PC21D	-	**-**		53175-MR1-671	**184120741**	
Vt 600 C Shadow Sprocket Large Spline	600	1988	1988	PC21	-	**-**		53175-MR1-671	**184120741**	
Vt 600 C Shadow Sprocket Narrow Spline	600	1988	1988	PC21	-	**-**		53175-MR1-671	**184120741**	
Xl 600 Lm Paris Dakar	600	1985	1987	PD04	53178-MAN-600	**184102070**		-	**-**	
Xl 600 Rm	600	1986	1986	PD04	53178-MAN-600	**184102070**		-	**-**	
Xl 600 V Transalp	600	1987	1987	PD06	53178-MAN-600	**184102070**		-	**-**	
Xl 600 V Transalp	600	1989	1993	PD06	53178-MAN-600	**184102070**		-	**-**	
Xl 600 V Transalp	600	1994	1995	PD06	53178-MAN-600	**184102070**		53175-MAB-621	**184122420**	
Xl 600 V Transalp	600	1996	1996	PD06A	53178-MAN-600	**184102070**		53175-MAB-621	**184122420**	
Xl 600 V Transalp	600	1996	1996	PD06B	53178-MAN-600	**184102070**		53175-MAB-621	**184122420**	
Xl 600 V Transalp	600	1997	2000	PD10A	53178-MAN-600	**184102070**		53175-MAB-621	**184122420**	
Xl 600 V Transalp	600	1997	2000	PD10B	53178-MAN-600	**184102070**		53175-MAB-621	**184122420**	
Xl 600 V Transalp Sprocket Large Spline	600	1988	1988	PD06	53178-MAN-600	**184102070**		-	**-**	
Xl 600 V Transalp Sprocket Narrow Spline	600	1988	1988	PD06	53178-MAN-600	**184102070**		-	**-**	
Fmx 650	650	2005	2007	RD12A	53178-MAN-600	**184102070**		53175-MAB-621	**184122420**	
Fmx 650	650	2005	2007	RD12B	53178-MAN-600	**184102070**		53175-MAB-621	**184122420**	
Fx 650 Vigor	650	1999	2000	RD09A	53178-MAN-600	**184102070**		-	**-**	



LEVE

LEVERS

Modello *Model*	**CC**	**Da** *From*	**A** *To*	**Telaio** *Frame*	**OEM Leva sx** *Left Lever OEM Number*	**Leva sinistra** *Left Lever*	**Note leva sinistra** *Left Lever Notes*	**OEM Leva dx** *Right Lever OEM Number*	**Leva destra** *Right Lever*	**Note leva destra** *Right Lever Notes*
Fx 650 Vigor	650	1999	2000	RD09C	53178-MAN-600	**184102070**		-	-	
Nt 650 Gt Hawk/ Bros	650	1988	1990	RC312	53178-KV0-000	**184102520**		53175-MR1-671	**184120741**	
Ntv 650 Revere	650	1988	1993	RC33	53178-KV0-000	**184102520**		53175-MR1-671	**184120741**	
Ntv 650 Revere	650	1996	1997	RC33A	-	-		53175-MR1-671	**184120741**	
Ntv 650 Revere	650	1996	1997	RC33B	-	-		53175-MR1-671	**184120741**	
Ntv 650 Revere	650	1996	1997	RC33C	-	-		53175-MR1-671	**184120741**	
Nx 650 Dominator	650	1990	1994	RD02	53178-MAN-600	**184102070**		-	-	
Nx 650 Dominator	650	1995	1995	RD0870	53178-MAN-600	**184102070**		53175-MAB-621	**184122420**	
Nx 650 Dominator	650	1995	1995	RD0871	53178-MAN-600	**184102070**		53175-MAB-621	**184122420**	
Nx 650 Dominator	650	1996	2000	RD08A	53178-MAN-600	**184102070**		53170-MAN-911	**184122540**	
Nx 650 Dominator	650	1996	2000	RD08B	53178-MAN-600	**184102070**		53170-MAN-911	**184122540**	
Nx 650 Dominator Pignone Spina Larga	650	1988	1988	RD02	53178-MAN-600	**184102070**		-	-	
Nx 650 Dominator Pignone Spina Stretta	650	1989	1989	RD02	53178-MAN-600	**184102070**		-	-	
Slr 650	650	1997	1998	RD09A	53178-MAN-600	**184102070**		53175-MAK-003	**184122570**	
Slr 650	650	1997	1998	RD09C	53178-MAN-600	**184102070**		53175-MAK-003	**184122570**	
Xl 650 V Transalp	650	2000	2001	RD10A	53178-MAN-600	**184102070**		53175-MAB-621	**184122420**	
Xl 650 V Transalp	650	2000	2001	RD10B	53178-MAN-600	**184102070**		53175-MAB-621	**184122420**	
Xl 650 V Transalp	650	2002	2007	RD11A	53178-MAN-600	**184102070**		53175-MAB-621	**184122420**	
Xl 650 V Transalp	650	2002	2007	RD11B	53178-MAN-600	**184102070**		53175-MAB-621	**184122420**	
Xr 650 R	650	2000	2007	RE01A	53178-MAC-740	**184102060**		-	-	
Xrv 650 Africa Twin	650	1988	1990	RD03	53178-MAN-600	**184102070**		-	-	
Nc 700 D Integra Dct Abs	700	2012	2012	RC62A	53178-MCT-006	**184100611**		53175-KM9-006	**184120741**	
Nc 700 D Integra Dct Abs	700	2012	2012	RC62B	53178-MCT-006	**184100611**		53175-KM9-006	**184120741**	
Nc 700 D Integra Dct Abs	700	2013	2013	RC62A	53178-MCT-006	**184100611**		53175-KM9-006	**184120741**	
Nt 700 V Deauville	700	2006	2010	RC52A	53178-KV0-000	**184102520**		53170-MBR-J11	**184122180**	
Nt 700 V Deauville	700	2011	2013	RC59A	53178-KV0-000	**184102520**		53170-MBR-J11	**184122180**	
Nt 700 Va Deauville Abs	700	2006	2009	RC52B	53178-KV0-000	**184102520**		53170-MBR-J11	**184122180**	
Nt 700 Va Deauville Abs	700	2010	2010	RC52D	53178-KV0-000	**184102520**		53170-MBR-J11	**184122180**	
Nt 700 Va Deauville Abs	700	2011	2016	RC59B	53178-KV0-000	**184102520**		53170-MBR-J11	**184122180**	
Xl 700 V Transalp	700	2008	2009	RD13A	53178-MAN-600	**184102070**		53175-MAB-621	**184122420**	
Xl 700 V Transalp	700	2010	2010	RD13A	53178-MAN-600	**184102070**		-	-	
Xl 700 Va Transalp Abs	700	2008	2010	RD13B	53178-MAN-600	**184102070**		53175-MAB-621	**184122420**	
Xl 700 Va Transalp Abs	700	2011	2013	RD15B	53178-MAN-600	**184102070**		-	-	
Cb 750 F2 Seven Fifty	750	1992	1995	RC42	53178-KV0-000	**184102520**		53175-MR1-671	**184120741**	
Cb 750 F2 Seven Fifty	750	1996	2003	RC42A	53178-KV0-000	**184102520**		53175-MR1-671	**184120741**	
Cb 750 F2 Seven Fifty	750	1996	2003	RC42B	53178-KV0-000	**184102520**		53175-MR1-671	**184120741**	
Cb 750 Nighthawk	750	1991	1992	RC382	53178-KV0-000	**184102520**		53175-MR1-671	**184120741**	
Vf 750 C Magna	750	1993	1995	RC43	53178-KV0-000	**184102520**		53175-MR1-671	**184120741**	
Vf 750 C Magna	750	1996	2000	RC43A	53178-KV0-000	**184102520**		53175-MR1-671	**184120741**	
Vf 750 C Magna	750	1996	2000	RC43B	53178-KV0-000	**184102520**		53175-MR1-671	**184120741**	
Vf 750 C Magna	750	1996	2000	RC43C	53178-KV0-000	**184102520**		53175-MR1-671	**184120741**	
Vt 750 C Shadow	750	1997	2000	RC44A	53178-MM5-006	**184102220**		53175-MR1-671	**184120741**	
Vt 750 C Shadow	750	2004	2007	RC50A	53178-MM5-006	**184102220**		53175-MR1-671	**184120741**	
Vt 750 C Shadow	750	2008	2009	RC50B	53178-MM5-006	**184102220**		53175-MR1-671	**184120741**	
Vt 750 C2 Shadow Aero	750	1997	2002	RC44A	53178-MM5-006	**184102220**		53175-MR1-671	**184120741**	



Modello *Model*	CC	Da *From*	A *To*	Telaio *Frame*	OEM Leva sx *Left Lever OEM Number*	Leva sinistra *Left Lever*	Note leva sinistra *Left Lever Notes*	OEM Leva dx *Right Lever OEM Number*	Leva destra *Right Lever*	Note leva destra *Right Lever Notes*
Vt 750 C2 Shadow Spirit	750	2007	2009	RC53A	53178-MM5-006	**184102220**		53175-MR1-671	**184120741**	
Vt 750 C2S Shadow Abs	750	2010	2012	RC53B	53178-MM5-006	**184102220**		53175-MR1-671	**184120741**	
Vt 750 Ca Shadow	750	2006	2007	RC50A	53178-MM5-006	**184102220**		53175-MR1-671	**184120741**	
Vt 750 Ca Shadow	750	2008	2009	RC50B	53178-MM5-006	**184102220**		53175-MR1-671	**184120741**	
Vt 750 Cs Shadow Abs	750	2010	2012	RC50C	53178-MM5-006	**184102220**		53175-MR1-671	**184120741**	
Vt 750 Dc Black Widow	750	2000	2003	RC48A	53178-MM5-006	**184102220**		53175-MR1-671	**184120741**	
Vt 750 Dc Black Widow	750	2000	2003	RC48B	53178-MM5-006	**184102220**		53175-MR1-671	**184120741**	
Vt 750 S	750	2010	2013	RC58A	53178-MM5-006	**184102220**		53175-MR1-671	**184120741**	
Xlv 750 R	750	1983	1985	RD01	53178-MAN-600	**184102070**		-	**-**	
Xrv 750 Africa Twin	750	1990	1992	RD04	53178-MAN-600	**184102070**		-	**-**	
Xrv 750 Africa Twin	750	1993	1995	RD07	53178-MAN-600	**184102070**		-	**-**	
Xrv 750 Africa Twin	750	1996	2003	RD07A	53178-MAN-600	**184102070**		-	**-**	
Xrv 750 Africa Twin	750	1996	2003	RD07B	53178-MAN-600	**184102070**		-	**-**	
Vfr 800	800	2002	2010	RC46A	53180-MCF-006	**184102230**		53170-MBW-006	**184122170**	
Vfr 800 A Abs	800	2002	2013	RC46C	53180-MCF-006	**184102230**		53170-MBW-006	**184122170**	
Vfr 800 Fi	800	1998	1998	RC46A	53180-MCF-006	**184102230**		53170-MAT-006	**184122550**	
Vfr 800 Fi	800	1998	1999	RC46B	53180-MCF-006	**184102230**		53170-MAT-006	**184122550**	
Vfr 800 Fi	800	2000	2001	RC46D	53180-MCF-006	**184102230**		53170-MAT-006	**184122550**	
Vfr 800 Fi Jubi Modell	800	1999	1999	RC46B	53180-MCF-006	**184102230**		53170-MAT-006	**184122550**	
Vfr 800 X Crossrunner Abs	800	2011	2012	RC60A	53180-MEJ-006	**184102270**		53170-MEJ-006	**184122270**	
Cb 900 F Hornet	900	2002	2006	SC48B	53178-KV0-000	**184102520**		53170-MBR-J11	**184122180**	
Cbr 900 Rr Fireblade	900	1992	1995	SC28	53178-KV3-000	**184102150**		53170-KV0-006	**184122080**	
Cbr 900 Rr Fireblade	900	1996	1997	SC33D	53178-KV3-000	**184102150**		53170-KV0-006	**184122080**	
Cbr 900 Rr Fireblade	900	1997	1997	SC33A	53178-KV3-000	**184102150**		53170-KV0-006	**184122080**	
Cbr 900 Rr Fireblade	900	1998	1999	SC33A	53178-KV3-000	**184102150**		53170-MBW-006	**184122170**	
Cbr 900 Rr Fireblade	900	1998	1999	SC33D	53178-KV3-000	**184102150**		53170-MBW-006	**184122170**	
Cbr 900 Rr Fireblade	900	2000	2001	SC44B	53178-KV3-000	**184102150**		53170-MCF-006	**184122510**	
Cbr 900 Rr Fireblade	900	2002	2003	SC50B	53178-MFG-D01	**184102260**		53170-MCF-006	**184122510**	
Cb 1000 F Super Four	1000	1993	1995	SC30	53178-MM5-006	**184102220**		53170-KV0-006	**184122080**	
Cb 1000 F Super Four	1000	1996	1996	SC30A	53178-MM5-006	**184102220**		53170-KV0-006	**184122080**	
Cb 1000 F Super Four	1000	1996	1996	SC30C	53178-MM5-006	**184102220**		53170-KV0-006	**184122080**	
Cb 1000 R	1000	2008	2016	SC60A	53180-MEJ-006	**184102270**		53170-MEL-006	**184122590**	
Cb 1000 Ra Abs	1000	2008	2016	SC60C	53180-MEJ-006	**184102270**		53170-MEL-006	**184122590**	
Cbf 1000	1000	2006	2010	SC58A	53180-MCF-006	**184102230**		53170-MBR-J11	**184122180**	
Cbf 1000 A Abs	1000	2006	2012	SC58B	53180-MCF-006	**184102230**		53170-MBR-J11	**184122180**	
Cbf 1000 F	1000	2010	2014	SC64A	53180-MEJ-006	**184102270**		53170-MEJ-006	**184122270**	
Cbf 1000 Fa Abs	1000	2010	2016	SC64B	53180-MEJ-006	**184102270**		53170-MEJ-006	**184122270**	
Cbf 1000 Fa Abs	1000	2010	2016	SC64D	53180-MEJ-006	**184102270**		53170-MEJ-006	**184122270**	
Cbr 1000 F	1000	1987	1988	SC21	53178-MM5-006	**184102220**		53170-KV0-006	**184122080**	
Cbr 1000 F	1000	1989	1992	SC24	53178-MM5-006	**184102220**		53170-KV0-006	**184122080**	
Cbr 1000 F Dual Cbs	1000	1993	1995	SC24	53178-MM5-006	**184102220**		53170-KV0-006	**184122080**	
Cbr 1000 F Dual Cbs	1000	1996	2000	SC24B	53178-MM5-006	**184102220**		53170-KV0-006	**184122080**	
Cbr 1000 Ra Fireblade Abs	1000	2009	2012	SC59C	53178-MFG-D01	**184102260**		53170-MEL-006	**184122590**	



LEVE

LEVERS

Modello *Model*	**CC**	**Da** *From*	**A** *To*	**Telaio** *Frame*	**OEM Leva sx** *Left Lever OEM Number*	**Leva sinistra** *Left Lever*	**Note leva sinistra** *Left Lever Notes*	**OEM Leva dx** *Right Lever OEM Number*	**Leva destra** *Right Lever*	**Note leva destra** *Right Lever Notes*
Cbr 1000 Rr Fireblade	1000	2004	2005	SC57B	53180-MEJ-006	**184102270**		53170-MEL-006	**184122590**	
Cbr 1000 Rr Fireblade	1000	2004	2007	SC57A	53180-MEJ-006	**184102270**		53170-MEL-006	**184122590**	
Cbr 1000 Rr Fireblade	1000	2008	2012	SC59A	53178-MFG-D01	**184102260**		53170-MEL-006	**184122590**	
Cbr 1000 Rrs Fireblade Edition	1000	2007	2007	SC57D	53180-MEJ-006	**184102270**		53170-MEL-006	**184122590**	
Cbr 1000 Rrs Fireblade Edition	1000	2008	2008	SC59D	53180-MEJ-006	**184102270**		53170-MEL-006	**184122590**	
Vtr 1000 F Fire Storm	1000	1997	2000	SC36D	53180-MCF-006	**184102230**		53170-MBW-006	**184122170**	
Vtr 1000 F Fire Storm	1000	1997	2004	SC36B	53180-MCF-006	**184102230**		53170-MBW-006	**184122170**	
Vtr 1000 F Fire Storm	1000	2001	2002	SC36A	53180-MCF-006	**184102230**		53170-MBW-006	**184122170**	
Vtr 1000 F Fire Storm	1000	2003	2006	SC36C	53180-MCF-006	**184102230**		53170-MBW-006	**184122170**	
Vtr 1000 Sp1	1000	2000	2001	SC45A	53180-MCF-006	**184102230**		53170-MCF-006	**184122510**	
Vtr 1000 Sp2	1000	2002	2003	SC45A	53180-MCF-006	**184102230**		53170-MCF-006	**184122510**	
Vtr 1000 Sp2	1000	2004	2006	SC45A	53180-MEJ-006	**184102270**		53170-MCF-006	**184122510**	
Xl 1000 V Varadero	1000	2003	2006	SD02B	-	**-**		53170-MAT-006	**184122550**	
Xl 1000 V Varadero	1000	2003	2007	SD02A	-	**-**		53170-MAT-006	**184122550**	
Xl 1000 Va Varadero Abs	1000	2004	2006	SD02D	-	**-**		53170-MAT-006	**184122550**	
Xl 1000 Va Varadero Abs	1000	2004	2007	SD02C	-	**-**		53170-MAT-006	**184122550**	
Cbr 1100 Xx Super Blackbird	1100	1997	1997	SC35C	53180-MCF-006	**184102230**		53170-MAT-006	**184122550**	
Cbr 1100 Xx Super Blackbird	1100	1997	1998	SC35D	53180-MCF-006	**184102230**		53170-MAT-006	**184122550**	
Cbr 1100 Xx Super Blackbird	1100	1998	2008	SC35A	53180-MCF-006	**184102230**		53170-MAT-006	**184122550**	
Cbr 1100 Xx Super Blackbird	1100	1999	2000	SC35G	53180-MCF-006	**184102230**		53170-MAT-006	**184122550**	
Vt 1100 C Shadow	1100	1988	1989	SC23	53178-MM5-006	**184102220**		53175-MR1-671	**184120741**	
Vt 1100 C Shadow	1100	1994	1995	SC23	53178-MM5-006	**184102220**		53175-MR1-671	**184120741**	
Vt 1100 C2 Shadow Ace	1100	1995	1995	SC32	53178-MM5-006	**184102220**		53175-MR1-671	**184120741**	
Vt 1100 C2 Shadow Ace	1100	1996	1998	SC32B	53178-MM5-006	**184102220**		53175-MR1-671	**184120741**	
Vt 1100 C2 Shadow Ace	1100	1996	2000	SC32A	53178-MM5-006	**184102220**		53175-MR1-671	**184120741**	
Vt 1100 C3 Shadow Aero	1100	1998	2000	SC39A	53178-MM5-006	**184102220**		53175-MR1-671	**184120741**	
Vt 1100 C3 Shadow Aero	1100	1998	2000	SC39C	53178-MM5-006	**184102220**		53175-MR1-671	**184120741**	
Vt 1100 C3 Shadow Aero	1100	1998	2000	SC39E	53178-MM5-006	**184102220**		53175-MR1-671	**184120741**	
Vfr 1200 F Abs	1200	2010	2018	SC63A	53180-MEJ-006	**184102270**		53170-MEE-006	**184122580**	
Vfr 1200 X Crosstourer Abs	1200	2012	2013	SC70A	53180-MEJ-006	**184102270**		53170-MEJ-006	**184122270**	
Cb 1300 A Super Four	1300	2007	2008	SC54C	53180-MEJ-006	**184102270**		53170-MEJ-006	**184122270**	
Cb 1300 A Super Four	1300	2009	2009	SC54A	53180-MEJ-006	**184102270**		53170-MEJ-006	**184122270**	
Cb 1300 A Super Four Abs	1300	2005	2006	SC54C	53180-MEJ-006	**184102270**		53170-MEJ-006	**184122270**	
Cb 1300 F Super Four	1300	2003	2004	SC54A	53180-MEJ-006	**184102270**		53170-MEJ-006	**184122270**	
Cb 1300 Sa Super Four Abs	1300	2005	2013	SC54E	53180-MEJ-006	**184102270**		53170-MEJ-006	**184122270**	
Cb 1300 Super Four	1300	2005	2005	SC54A	53180-MEJ-006	**184102270**		53170-MEJ-006	**184122270**	
Cb-X4 1300 Dc	1300	1997	1999	SC38	53180-MCF-006	**184102230**		53170-MBW-006	**184122170**	
Vt 1300 Cx	1300	2010	2016	SC61A	53178-MM5-006	**184102220**		53175-MR1-671	**184120741**	
Vt 1300 Cxa Abs	1300	2010	2015	SC61B	53178-MM5-006	**184102220**		53175-MR1-671	**184120741**	



Modello *Model*	CC	Da *From*	A *To*	Telaio *Frame*	OEM Leva sx *Left Lever OEM Number*	Leva sinistra *Left Lever*	Note leva sinistra *Left Lever Notes*	OEM Leva dx *Right Lever OEM Number*	Leva destra *Right Lever*	Note leva destra *Right Lever Notes*
Vtx 1300	1300	2003	2007	SC52A	53178-MM5-006	**184102220**		53175-MR1-671	**184120741**	
Gl 1500 C Valkyrie F6C	1500	1997	2003	SC34B	53178-MM5-006	**184102220**		53175-MR1-671	**184120741**	
Gl 1500 C Valkyrie F6C	1500	2002	2003	SC34A	53178-MM5-006	**184102220**		53175-MR1-671	**184120741**	
Gl 1500 C Valkyrie F6C	1500	2002	2003	SC34B	53178-MM5-006	**184102220**		53175-MR1-671	**184120741**	
Vtx 1800 C	1800	2001	2003	SC46A	53178-MM5-006	**184102220**		53175-MR1-671	**184120741**	
HUSABERG										
Te 250 2T Enduro	250	2011	2011	-	54802031000	**184102360**		54813002100	**184122330**	
Te 300 2T Enduro	300	2011	2011	-	54802031000	**184102360**		54813002100	**184122330**	
Fe 390 Ie Enduro	390	2010	2011	-	54802031000	**184102360**		54813002100	**184122330**	
Fc 400 Cross	400	1998	2000	-	59002031000	**184102310**	Standard	50313002100	**184122110**	
Fc 400 Cross	400	1998	2000	-	-	**184102330**	Corta	50313002100	**184122110**	
Fe 400 E Enduro	400	1998	2003	-	59002031000	**184102310**	Standard	50313002100	**184122110**	
Fe 400 E Enduro	400	1998	2003	-	-	**184102330**	Corta	50313002100	**184122110**	
Fe 400 Enduro	400	1998	2000	-	59002031000	**184102310**	Standard	50313002100	**184122110**	
Fe 400 Enduro	400	1998	2000	-	-	**184102330**	Corta	50313002100	**184122110**	
Fc 450 Cross	450	2004	2006	-	59002031000	**184102310**	Standard	50313002100	**184122110**	
Fc 450 Cross	450	2004	2006	-	-	**184102330**	Corta	50313002100	**184122110**	
Fe 450 E Enduro	450	2004	2008	-	59002031000	**184102310**	Standard	50313002100	**184122110**	
Fe 450 E Enduro	450	2004	2008	-	-	**184102330**	Corta	50313002100	**184122110**	
Fe 450 Ie Enduro	450	2009	2011	-	54802031000	**184102360**		54813002100	**184122330**	
Fs 450 E Supermoto	450	2008	2008	-	59002031000	**184102310**	Standard	54813002100	**184122330**	
Fs 450 E Supermoto	450	2008	2008	-	-	**184102330**	Corta	54813002100	**184122330**	
Fx 450 Ie Cross	450	2010	2011	-	54802031000	**184102360**		54813002100	**184122330**	
Fc 470 Cross	470	2001	2002	-	59002031000	**184102310**	Standard	50313002100	**184122110**	
Fc 470 Cross	470	2001	2002	-	-	**184102330**	Corta	50313002100	**184122110**	
Fc 501 Cross	501	1998	2000	-	59002031000	**184102310**	Standard	50313002100	**184122110**	
Fc 501 Cross	501	1998	2000	-	-	**184102330**	Corta	50313002100	**184122110**	
Fe 501 E Enduro	501	1998	2004	-	59002031000	**184102310**	Standard	50313002100	**184122110**	
Fe 501 E Enduro	501	1998	2004	-	-	**184102330**	Corta	50313002100	**184122110**	
Fe 501 Enduro	501	1998	2000	-	59002031000	**184102310**	Standard	50313002100	**184122110**	
Fe 501 Enduro	501	1998	2000	-	-	**184102330**	Corta	50313002100	**184122110**	
Fc 550 Cross	550	2001	2006	-	59002031000	**184102310**	Standard	50313002100	**184122110**	
Fc 550 Cross	550	2001	2006	-	-	**184102330**	Corta	50313002100	**184122110**	
Fe 550 E Enduro	550	2004	2008	-	59002031000	**184102310**	Standard	50313002100	**184122110**	
Fe 550 E Enduro	550	2004	2008	-	-	**184102330**	Corta	50313002100	**184122110**	
Fe 570 Ie Enduro	570	2009	2011	-	54802031000	**184102360**		54813002100	**184122330**	
Fs 570 Ie Supermoto	570	2010	2011	-	54802031000	**184102360**		54813002100	**184122330**	
Fc 600 Cross	600	1998	2000	-	59002031000	**184102310**	Standard	50313002100	**184122110**	
Fc 600 Cross	600	1998	2000	-	-	**184102330**	Corta	50313002100	**184122110**	
Fe 600 E Enduro	600	1998	2000	-	59002031000	**184102310**	Standard	50313002100	**184122110**	
Fe 600 E Enduro	600	1998	2000	-	-	**184102330**	Corta	50313002100	**184122110**	
Fe 600 Enduro	600	1998	2000	-	59002031000	**184102310**	Standard	50313002100	**184122110**	
Fe 600 Enduro	600	1998	2000	-	-	**184102330**	Corta	50313002100	**184122110**	
Fe 650 E Enduro	650	2001	2008	-	59002031000	**184102310**	Standard	50313002100	**184122110**	
Fe 650 E Enduro	650	2001	2008	-	-	**184102330**	Corta	50313002100	**184122110**	
Fs 650 C Supermoto	650	2007	2008	-	59002031000	**184102310**	Standard	54813002100	**184122330**	
Fs 650 C Supermoto	650	2007	2008	-	-	**184102330**	Corta	54813002100	**184122330**	
Fs 650 E Supermoto	650	2007	2008	-	59002031000	**184102310**	Standard	54813002100	**184122330**	
Fs 650 E Supermoto	650	2007	2008	-	-	**184102330**	Corta	54813002100	**184122330**	
HUSQVARNA										
Te-Smr	125	2011	2013	A500AA\A500AB	800089813	**184102080**		800079067	**184122070**	
Te-Sms4	125	2011	2011	A500AA\A500AB	800089813	**184102080**		800079067	**184122070**	
Wre-Sm S	125	2007	2008	H300A	800089813	**184102080**		8A0079067	**184122070**	
Wre-Sm S	125	2009	2010	H200AA\H200AB	800089813	**184102080**		8A0079067	**184122070**	



LEVE

LEVERS

Modello *Model*	**CC**	**Da** *From*	**A** *To*	**Telaio** *Frame*	**OEM Leva sx** *Left Lever OEM Number*	**Leva sinistra** *Left Lever*	**Note leva sinistra** *Left Lever Notes*	**OEM Leva dx** *Right Lever OEM Number*	**Leva destra** *Right Lever*	**Note leva destra** *Right Lever Notes*
Wre-Sms	125	2011	2011	H200AA\H200AB	800089813	**184102080**		800079067	**184122070**	
Wre-Sms	125	2012	2012	H200AAC\H200ABC	800089813	**184102080**		800079067	**184122070**	
Te-Tc 250-450 Smr 450	250	2003	2004	-	8000A0911	**184102310**	Standard	-	**-**	
Te-Tc-Smr 250-450-510	250	2005	2005	-	8000A2837	**184102310**	Standard	-	**-**	
Te-Tc-Smr 250-450-510	250	2006	2007	-	8000A2837	**184102310**	Standard	8000A7146	**184122300**	
Te-Tc-Txc-Smr 250-310-450-510	250	2009	2009	-	8000A2837	**184102310**	Standard	8000A7146	**184122300**	
Te-Tc-Txc-Smr 250-450-510	250	2008	2008	-	8000A2837	**184102310**	Standard	8000A7146	**184122300**	
Te-Tc-Txc-Smr 250-310-450-510	310	2009	2009	-	8000A2837	**184102310**		8000A7146	**184122300**	
Te-Tc-Txc-Smr 310-450-510	310	2010	2010	-	8000A2837	**184102310**	Standard	8000A7146	**184122300**	
Wr 250-360 - Cr 250	360	1998	1998	-	-	**-**		800079096	**184122010**	
Wr 250-360 - Cr 250	360	2001	2001	-	-	**-**		800079096	**184122010**	Solo modello WR
Te 410E-610E Te 610E-Lt Sm 610S	410	2000	2000	-	800089813	**184102080**		800079096	**184122010**	
Te E	410	1999	1999	H710AC	800089813	**184102080**		800079096	**184122010**	
Sm 450 Rr	450	2006	2006	H822AB	8000A2837	**184102310**	Standard	8000A7146	**184122300**	
Sm 450 Rr	450	2008	2008	A222A	8000A2837	**184102310**	Standard	-	**-**	
Sm 450-530 Rr	450	2009	2009	-	8000A2837	**184102310**	Standard	-	**-**	
Te-Tc 250-450 Smr 450	450	2003	2004	-	8000A0911	**184102310**		-	**-**	
Te-Tc-Smr 250-450-510	450	2005	2005	-	8000A2837	**184102310**		-	**-**	
Te-Tc-Smr 250-450-510	450	2006	2007	-	8000A2837	**184102310**		8000A7146	**184122300**	
Te-Tc-Txc-Smr 250-310-450-510	450	2009	2009	-	8000A2837	**184102310**		8000A7146	**184122300**	
Te-Tc-Txc-Smr 250-450-510	450	2008	2008	-	8000A2837	**184102310**		8000A7146	**184122300**	
Te-Tc-Txc-Smr 310-450-510	450	2010	2010	-	8000A2837	**184102310**		8000A7146	**184122300**	
Smr 449-511	480	2011	2011	A600A\A601A	-	**-**		8000A7146	**184122300**	
Te Centennial	510	2004	2004	H803CB	8000A0911	**184102310**	Standard	-	**-**	
Te R	510	2004	2004	H803CA	8000A0911	**184102310**	Standard	-	**-**	
Te-Tc-Smr 250-450-510	510	2005	2005	-	8000A2837	**184102310**		-	**-**	
Te-Tc-Smr 250-450-510	510	2006	2007	-	8000A2837	**184102310**		8000A7146	**184122300**	
Te-Tc-Txc-Smr 250-310-450-510	510	2009	2009	-	8000A2837	**184102310**		8000A7146	**184122300**	
Te-Tc-Txc-Smr 250-450-510	510	2008	2008	-	8000A2837	**184102310**		8000A7146	**184122300**	
Te-Tc-Txc-Smr 310-450-510	510	2010	2010	-	8000A2837	**184102310**		8000A7146	**184122300**	
Sm 450-530 Rr	530	2009	2009	-	8000A2837	**184102310**		-	**-**	
Te 400-570 Sm 570R	570	2001	2001	-	-	**-**		800079096	**184122010**	
Te 400-570 Sm 570R	570	2001	2001	-	-	**-**		800079067	**184122070**	
Te 410-610 Tc 610	610	1999	2000	-	-	**-**		800079096	**184122010**	
Te 410E-610E Te 610E-Lt Sm 610S	610	2000	2000	-	800089813	**184102080**		800079096	**184122010**	Solo modello TE
Te 410E-610E Te 610E-Lt Sm 610S	610	2000	2000	-	800089813	**184102080**		800079067	**184122070**	Solo modello SM
Te E Dual Purpose - Sm S	610	2003	2004	H701AA	800089813	**184102080**		800079096	**184122010**	
Te E Dual Purpose - Sm S	610	2005	2006	A100AA\A100AB	800089813	**184102080**		-	**-**	



Modello *Model*	CC	Da *From*	A *To*	Telaio *Frame*	OEM Leva sx *Left Lever OEM Number*	Leva sinistra *Left Lever*	Note leva sinistra *Left Lever Notes*	OEM Leva dx *Right Lever OEM Number*	Leva destra *Right Lever*	Note leva destra *Right Lever Notes*
Te E Dual Purpose - Sm S Ie	610	2007	2007	A1AFEK\A1EAEK	800089813	**184102080**		-	-	
Te E, Te E Lt, Sm	610	1998	1999	-	800089813	**184102080**		800079096	**184122010**	
Te-Sm Ie	610	2008	2009	-	800089813	**184102080**		-	-	
Te-Sms	630	2010	2011	H400AA\H400AB	8000A2837	**184102310**	Standard	8000A7146	**184122300**	
HYOSUNG										
Comet Gt 125R Euro3 I	125	2008	2011	KM4MF52C	57620HN9100	**184122480**		-	-	
Gt 125R	125	2006	2006	MF51E	57620HN9100	**184122480**		-	-	
Gt 250 Carburetion	250	2004	2007	MJ51B	57620HN9100	**184122480**		-	-	
Gt 250 Fi Sentec	250	2007	2008	MJ52B	57620HN9100	**184122480**		-	-	
Gt 250R Carburetion	250	2005	2007	MJ51E	57620HN9100	**184122480**		-	-	
Gt650 Carburetion	650	2004	2006	MP51A	57620HN9100	**184122480**		-	-	
Gt650 R - Gt650 S Carburetion	650	2005	2006	MP51B\MP51C	57620HN9100	**184122480**		-	-	
KAWASAKI										
Bn Eliminator A3-A5	125	2000	2002	BN125AADA	460921206	**184102420**		460921203	**184122400**	
Bn Eliminator A6-A8	125	2003	2005	BN125AADA	460921206	**184102420**		460921203	**184122400**	
Bn Eliminator A6F-A7F	125	2006	2007	BN125AADA	460921206	**184102420**		460921203	**184122400**	
Klx Caf-Cbf-Ccf-Ccs-Cdf	125	2010	2013	LX125CCDA	460921206	**184102420**		460921140	**184122600**	
Klx Cds-Cef-Cff-Cgf	125	2013	2016	LX125CCDA	460921206	**184102420**		460921140	**184122600**	
Klx D-Tracker Daf-Dbf-Dcf-Ddf-Def	125	2010	2014	LX125CDDA	460921206	**184102420**		460921140	**184122600**	
Klx D-Tracker Hgf	150	2016	2016	LX150HHJ	460920050	**184102420**		-	-	
Klx150L Eef	150	2014	2014	LX150EEDA	460920050	**184102420**		460921140	**184122600**	
Klx S9F-Saf-Sbf-Scf-Sdf	250	2009	2013	LX250SSD	460921206	**184102420**		460921140	**184122600**	
Klx Sef-Sff-Sgf	250	2014	2016	LX250SSDA	460921206	**184102420**		460921140	**184122600**	
Klx Shf	250	2017	2017	LX250SSDA	460920050	**184102420**		460921140	**184122600**	
Z250Sl Abs Fff-Ffs-Fgf	250	2015	2016	BR250EFJP	460920050	**184102420**		-	-	
Z250Sl Abs Fhf	250	2017	2017	BR250EFJP	460920050	**184102420**		-	-	
Z250Sl Eff-Efs-Egf	250	2015	2016	BR250EEJP	460920050	**184102420**		-	-	
Zzr H10	250	1999	1999	EX250HHA	460921162	**184102100**		132361221	**184122000**	
Zzr H12-H13	250	2001	2002	EX250HHA	460921162	**184102100**		132361221	**184122000**	
Zzr H14	250	2003	2003	EX250HHA	460921162	**184102100**		132361221	**184122000**	
Zzr H7-H8	250	1996	1998	EX250H	460921162	**184102100**		132361221	**184122000**	
Kle Versys-X Abs Chf-Cjf	300	2017	2018	LE300CCDA	-	-		460921203	**184122400**	
Z300 Abs Bhf-Bhfa-Bjf-Bjfa	300	2017	2018	ER300ABDA	460920050	**184102420**		460921203	**184122400**	
Z300 Aff-Agf	300	2015	2016	ER300AADA	460920050	**184102420**		460921203	**184122400**	
Z300 Bff-Bgf Abs	300	2015	2016	ER300ABDA	460920050	**184102420**		460921203	**184122400**	
Zxr H2	400	1990	1990	ZX400H	460921161	**184102210**		132361185	**184122100**	
Zxr L1-L3	400	1991	1993	ZX400L	460921162	**184102100**		132361226	**184122000**	
Zxr L4-L8	400	1994	1998	ZX400L	460921162	**184102100**		132361226	**184122000**	
Zxr L9	400	1999	1999	ZX400LLA	460921162	**184102100**		132361226	**184122000**	
En A3-A4	500	1992	1993	EN500A	460921164	**184102200**		460921172	**184122210**	
En B1-B2	500	1994	1995	EN500A	460921164	**184102200**		460921172	**184122210**	
En C1-C5	500	1996	2000	EN500ACA	460921164	**184102200**		460921172	**184122210**	
En C6-C7	500	2001	2002	EN500ACA	460921164	**184102200**		460921172	**184122210**	
En C8	500	2003	2003	EN500ACA	460921164	**184102200**		460921172	**184122210**	
Er-5 A1-A4	500	1997	2000	ER500AAA	460921162	**184102100**	Modelli A2/A3/A4	132361226	**184122000**	
Er-5 A1-A4	500	1997	2000	ER500AAA	460921181	**184102420**	Modello A1	-	-	
Er-5 C1-C3	500	2001	2003	ER500ACA	460921162	**184102100**		132361226	**184122000**	
Er-5 C4P-C5P	500	2004	2005	ER500ACA	460921162	**184102100**		132361337	**184122380**	
Gpz S B5	500	1992	1993	EX500A	460921161	**184102210**		132361185	**184122100**	
Gpz S E10	500	2003	2003	EX500DEA	460921161	**184102210**		132361185	**184122100**	



LEVE

LEVERS

Modello *Model*	**CC**	**Da** *From*	**A** *To*	**Telaio** *Frame*	**OEM Leva sx** *Left Lever OEM Number*	**Leva sinistra** *Left Lever*	**Note leva sinistra** *Left Lever Notes*	**OEM Leva dx** *Right Lever OEM Number*	**Leva destra** *Right Lever*	**Note leva destra** *Right Lever Notes*
Gpz S E1-E4	500	1994	1997	EX500D	460921161	**184102210**		132361185	**184122100**	
Gpz S E5-E7	500	1998	2000	EX500DEA	460921161	**184102210**		132361185	**184122100**	
Gpz S E9	500	2002	2002	EX500DEA	460921161	**184102210**		132361185	**184122100**	
Kle A11-A12	500	2001	2002	LE500AAA	460921161	**184102210**		132361185	**184122100**	
Kle A13	500	2003	2004	LE500AAA	460921161	**184102210**		132361185	**184122100**	
Kle A1-A4	500	1991	1994	LE500A	460921161	**184102210**		132361185	**184122100**	
Kle A5-A9	500	1995	1999	LE500A	460921161	**184102210**		132361185	**184122100**	
Kle B1P	500	2005	2005	LE500ABA	460921161	**184102210**		132361185	**184122100**	
Kle B6F-B7F	500	2006	2007	LE500ABA	460921161	**184102210**		132361185	**184122100**	
Ninja Zx-6R F1-F3	600	1995	1997	ZX600F	460921161	**184102210**		132361185	**184122100**	
Ninja Zx-6R G1-G2	600	1998	1999	ZX600GGA	460921162	**184102100**		132361326	**184122150**	
Ninja Zx-6R J1P-J2P	600	2000	2001	ZX600JJA	460921211	**184102400**		132361326	**184122150**	
Ninja Zx-6R P7F-P8F	600	2007	2008	ZX600PPA	460920006	**184102410**		132360103	**184122390**	
Ninja Zx-6R R9F-Raf-Rbf-Rcf-Rdf	600	2009	2013	ZX600RRA	460920006	**184102410**		132360103	**184122390**	
Ninja Zx-6R Ref-Rff-Rgf	600	2014	2016	ZX600RRA	460920006	**184102410**		132360103	**184122390**	
Ninja Zx-6Rr K1H	600	2003	2003	ZX600KKA	460920006	**184102410**		132360024	**184122620**	
Ninja Zx-6Rr M1H	600	2004	2004	ZX600KMA	460920006	**184102410**		132360024	**184122620**	
Ninja Zx-6Rr N1H	600	2005	2005	ZX600NNA	460920006	**184102410**		-	-	
Zl Eliminator B1	600	1995	1997	ZL600B	460921164	**184102200**		460921172	**184122210**	
Zzr D1	600	1990	1990	ZX600D	460921161	**184102210**		132361185	**184122100**	
Zzr D2-D2A-D3	600	1991	1992	ZX600D	460921161	**184102210**		132361185	**184122100**	
Zzr E10	600	2002	2002	ZX600EEA	460921161	**184102210**		132361185	**184122100**	
Zzr E11	600	2003	2003	ZX600EEA	460921161	**184102210**		132361185	**184122100**	
Zzr E12H-E13H	600	2004	2005	ZX600EEA	460920003	**184102400**		132361337	**184122380**	
Zzr E1-E3	600	1993	1995	ZX600E	460921161	**184102210**		132361185	**184122100**	
Zzr E4-E6	600	1996	1998	ZX600E	460921161	**184102210**		132361185	**184122100**	
Zzr E6F	600	2006	2006	ZX600EEA	460921162	**184102100**		132361337	**184122380**	
Zzr E7-E9	600	1999	2001	ZX600EEA	460921161	**184102210**		132361185	**184122100**	
Ninja Zx-6R A1P	636	2002	2002	ZX636AAA	460921211	**184102400**		132361326	**184122150**	
Ninja Zx-6R Abs Fdf-Fef-Fff-Fffa	636	2013	2015	ZX636EFA	460920006	**184102410**		-	-	
Ninja Zx-6R Abs Fgf-Fgfa	636	2016	2016	ZX636EFA	460920006	**184102410**		-	-	
Ninja Zx-6R Abs Fhf	636	2017	2017	ZX636EFA	460920006	**184102410**		-	-	
Ninja Zx-6R B1H-B2H	636	2003	2004	ZX636BBA	460920006	**184102410**		132360024	**184122620**	
Ninja Zx-6R C1H	636	2005	2005	ZX636CCA	460920006	**184102410**		-	-	
Ninja Zx-6R C6F	636	2006	2006	ZX636CCA	460920006	**184102410**		-	-	
Ninja Zx-6R Edf-Eef-Eff-Effa	636	2013	2015	ZX636EEA	460920006	**184102410**		-	-	
Ninja Zx-6R Egf-Egfa	636	2016	2016	ZX636EEA	460920006	**184102410**		-	-	
Er-6F A6F-A8F	650	2006	2008	EX650AAA	460921162	**184102100**		132361337	**184122380**	
Er-6F Abs B6F-B8F	650	2006	2008	EX650ABA	460921162	**184102100**		132361337	**184122380**	
Er-6F Abs D9F-Daf-Dbf	650	2009	2011	EX650CDD	460920031	**184102100**		132360169	**184122640**	
Er-6F Abs Fcf-Fds-Fef-Fff-Fgf	650	2012	2016	EX650EFDA	460920031	**184102100**		132360169	**184122640**	
Er-6F C9F-Caf-Cbf	650	2009	2011	EX650CCD	460920031	**184102100**		132360169	**184122640**	
Er-6F Ecf-Eds-Eef-Eff-Egf	650	2012	2016	EX650EEDA	460920031	**184102100**		132360169	**184122640**	
Er-6N A6S-A8F	650	2006	2008	ER650AAA\ER650AAD	460921162	**184102100**		132361337	**184122380**	
Er-6N Abs B6F-B8F	650	2006	2008	ER650ABA	460921162	**184102100**		132361337	**184122380**	
Er-6N Abs D9F-Daf-Dbf	650	2009	2011	ER650CDD	460920031	**184102100**		132360169	**184122640**	
Er-6N Abs Fcf-Fds-Fef-Fff-Fgf	650	2012	2016	ER650EFDA	460920031	**184102100**		132360169	**184122640**	
Er-6N C9F-Caf-Cbf	650	2009	2011	ER650CCD	460920031	**184102100**		132360169	**184122640**	
Er-6N Ecf-Eds-Eef-Eff-Egf	650	2012	2016	ER650EEDA	460920031	**184102100**		132360169	**184122640**	



Modello *Model*	**CC**	**Da** *From*	**A** *To*	**Telaio** *Frame*	**OEM Leva sx** *Left Lever OEM Number*	**Leva sinistra** *Left Lever*	**Note leva sinistra** *Left Lever Notes*	**OEM Leva dx** *Right Lever OEM Number*	**Leva destra** *Right Lever*	**Note leva destra** *Right Lever Notes*
Kle Versys A7F-A8F-A9F	650	2007	2009	LE650AAA	460920031	**184102100**	Modello A9F	132360169	**184122640**	Modello A9F
Kle Versys A7F-A8F-A9F	650	2007	2009	LE650AAA	-	**-**		132361337	**184122380**	Modello A7F-A8F
Kle Versys Abs B7F-B8F-B9F	650	2007	2009	LE650ABA	460920031	**184102100**		132360169	**184122640**	
Kle Versys Abs Daf	650	2010	2010	LE650CDA	460920031	**184102100**		132360169	**184122640**	
Kle Versys Abs Dbf-Dcf-Ddf-Def	650	2011	2014	LE650CDD	460920031	**184102100**		132360169	**184122640**	
Kle Versys Abs Fff-Fgf	650	2015	2016	LE650EFDA	460920031	**184102100**		-	**-**	
Kle Versys Abs Fhf-Fhfa-Fjf-Fjfa	650	2017	2018	LE650EFDA	460920031	**184102100**		-	**-**	
Kle Versys Caf	650	2010	2010	LE650CCA	460920031	**184102100**		132360169	**184122640**	
Kle Versys Cbf-Ccf-Cdf-Cef	650	2011	2014	LE650CCD	460920031	**184102100**		132360169	**184122640**	
Kle Versys Eff-Egf	650	2015	2016	LE650EEDA	460920031	**184102100**		-	**-**	
Ninja 650 Abs Khf-Khfa-Kjf-Kjfa	650	2017	2018	EX650KKDA	-	**-**		132360140	**184122520**	
Ninja 650 Abs Kkf-Kkfa	650	2019	2019	EX650KKDA	-	**-**		132360140	**184122520**	
Vulcan S Abs Bff-Bgf-Bgfa	650	2015	2016	EN650ABDA	460920031	**184102100**		132360140	**184122520**	
Vulcan S Abs Dhf-Dhfa-Djf-Djfa	650	2017	2018	EN650DDDA	460920031	**184102100**		132360140	**184122520**	
Vulcan S Aff-Agf-Agfa	650	2015	2016	EN650AADA	460920031	**184102100**		132360140	**184122520**	
Vulcan S Cafe' Abs Ehf-Ejf	650	2017	2018	EN650DEDA	460920031	**184102100**		132360140	**184122520**	
Vulcan S Dkf-Dkfa	650	2019	2019	EN650DDDA	460920031	**184102100**		132360140	**184122520**	
Z650 Abs Hhf-Hjf-Hkf	650	2017	2019	ER650HHDA	460920031	**184102100**		132360140	**184122520**	
Ninja Zx-7R P1-P4	750	1996	1999	ZX750PPA	132361186	**184102140**		-	**-**	
Ninja Zx-7R P5-P7	750	2000	2002	ZX750PPA	132361186	**184102140**		-	**-**	
Ninja Zx-7Rr N1	750	1996	1998	ZX750	132361186	**184102140**		132361185	**184122100**	
Z750 Abs M7F-Maf-Mas	750	2007	2010	ZR750LMA	460920003	**184102400**		132360140	**184122520**	
Z750 Abs Mbf-Mcf	750	2011	2012	ZR750LMA	460920003	**184102400**		132360140	**184122520**	
Z750 J1H-J2H	750	2004	2005	ZR750JJA	460921162	**184102100**		132361337	**184122380**	
Z750 J6F	750	2006	2006	ZR750JJA	460921162	**184102100**		132361337	**184122380**	
Z750 L7F-Laf-Las	750	2007	2010	ZR750LLA	460920003	**184102400**		132360140	**184122520**	
Z750 Lbf-Lcf	750	2011	2012	ZR750LLA	460920003	**184102400**		132360140	**184122520**	
Z750R Abs Pbf-Pcf	750	2011	2012	ZR750NPA	460920003	**184102400**		132360139	**184122630**	
Z750R Nbf-Ncf	750	2011	2012	ZR750NNA	460920003	**184102400**		132360139	**184122630**	
Z750S K1H	750	2005	2005	ZR750	460921162	**184102100**		132361337	**184122380**	
Z750S K6F	750	2006	2006	ZR750	460921162	**184102100**		132361337	**184122380**	
Zr Zephyr C1-C4	750	1991	1994	ZR750C	460921162	**184102100**		132361221	**184122000**	
Zr-7 F1	750	1999	1999	ZR750FFA	460921162	**184102100**		132361221	**184122000**	
Zr-7 F3	750	2001	2001	ZR750FFA	460921162	**184102100**		132361221	**184122000**	
Zr-7 F5	750	2003	2003	ZR750FFA	460921162	**184102100**		132361221	**184122000**	
Zr-7S H1-H3	750	2001	2003	ZR750FHA	460921162	**184102100**		132361221	**184122000**	
Zxr H1 Stinger	750	1989	1989	ZX750H	132361186	**184102140**		132361185	**184122100**	
Zxr H2 Stinger	750	1990	1990	ZX750H	132361186	**184102140**		132361185	**184122100**	
Zxr J1-J2	750	1991	1992	ZX750J	132361186	**184102140**		132361185	**184122100**	
Zxr L1-L3	750	1993	1995	ZX750L	132361186	**184102140**		132361185	**184122100**	
Zxr R K1	750	1991	1991	ZX750K	132361186	**184102140**		132361185	**184122100**	
Zxr R M1-M2	750	1993	1994	ZX750M	132361186	**184102140**		132361185	**184122100**	
Ej 800 (W800) Abf-Abs-Acf-Acfa	800	2011	2012	EJ800AAA	460921162	**184102100**		132361221	**184122000**	
Ej 800 (W800) Adf-Adfa-Aef-Aefa	800	2013	2014	EJ800AAA	460921162	**184102100**		132361221	**184122000**	
Ej 800 (W800) Aff-Affa-Agf-Agfa-Ags	800	2015	2016	EJ800AAA	460921162	**184102100**		132361221	**184122000**	



LEVE

LEVERS

Modello *Model*	**CC**	**Da** *From*	**A** *To*	**Telaio** *Frame*	**OEM Leva sx** *Left Lever OEM Number*	**Leva sinistra** *Left Lever*	**Note leva sinistra** *Left Lever Notes*	**OEM Leva dx** *Right Lever OEM Number*	**Leva destra** *Right Lever*	**Note leva destra** *Right Lever Notes*
Vn A1-A4	800	1995	1998	VN800A	460921164	**184102200**		460921172	**184122210**	
Vn Classic B10P	800	2005	2005	VN800ABA	460921164	**184102200**		460921172	**184122210**	
Vn Classic B1-B4	800	1996	1999	VN800ABA	460921164	**184102200**		460921172	**184122210**	
Vn Classic B5-B7	800	2000	2002	VN800ABA	460921164	**184102200**		460921172	**184122210**	
Vn Classic B6F	800	2006	2006	VN800ABA	460921164	**184102200**		460921172	**184122210**	
Vn Classic B8	800	2003	2003	VN800ABA	460921164	**184102200**		460921172	**184122210**	
Vn Classic B9P	800	2004	2004	VN800ABA	460921164	**184102200**		460921172	**184122210**	
Z800 Abs Bds-Bef-Bff-Bgf	800	2013	2016	ZR800ABDA	460920003	**184102400**		132360140	**184122520**	
Z800 Ads-Aef-Aff-Agf	800	2013	2016	ZR800AADA	460920003	**184102400**		132360140	**184122520**	
Z800 E Abs Dds-Def-Dff-Dgf-Dgfa	800	2013	2016	ZR800CDDA	460920003	**184102400**		132360140	**184122520**	
Z800 E Abs Special Edition Fgf	800	2016	2016	ZR800FFDA	460920003	**184102400**		132360140	**184122520**	
Z800 E Cds-Cef-Cff-Cgf-Cgfa	800	2013	2016	ZR800CCDA	460920003	**184102400**		132360140	**184122520**	
Z800 E Special Edition Egf	800	2016	2016	ZR800EEDA	460920003	**184102400**		132360140	**184122520**	
Ninja Zx-9R B1-B3	900	1994	1996	ZX900B	132361186	**184102140**		132361185	**184122100**	
Ninja Zx-9R B4	900	1997	1997	ZX900B	132361186	**184102140**		132361185	**184122100**	
Ninja Zx-9R C1-C2	900	1998	1999	ZX900CCA	460921162	**184102100**		132361326	**184122150**	
Ninja Zx-9R E1P-E2P	900	2000	2001	ZX900EEA	460921211	**184102400**		132361326	**184122150**	
Ninja Zx-9R Euro2 F1P-F2P	900	2002	2003	ZX900EFA	460921211	**184102400**		132361326	**184122150**	
Ninja Zx-9R F1H-F2H	900	2002	2003	ZX900EFA	460921211	**184102400**		132361326	**184122150**	
Z900 A2 Djf	900	2018	2018	ZR900DDA	-	**-**		132360140	**184122520**	
Z900 Abs Bhf	900	2017	2017	ZR900BBDA	-	**-**		132360140	**184122520**	
Z900 Bjf-Bkf	900	2018	2019	ZR900BBA	-	**-**		132360140	**184122520**	
Z900Rs Cafe Ejf-Ekf	900	2018	2019	ZR900CEA	-	**-**		132360139	**184122630**	
Z900Rs Cjf-Cjfa-Cjfb	900	2018	2018	ZR900CCA	-	**-**		132360139	**184122630**	
Z900Rs Ckf-Ckfa-Ckfb	900	2019	2019	ZR900CCA	-	**-**		132360139	**184122630**	
Gtr A11	1000	1996	1997	ZG1000A	132361186	**184102140**		132361185	**184122100**	
Gtr A18	1000	2003	2003	ZGT00AAA	132361186	**184102140**		132361185	**184122100**	
Klv A1H-A2H	1000	2004	2005	JSKBS1122	46076S014	**184102120**		-	**-**	
Klz Versys Acf-Adf-Aef	1000	2012	2014	LZT00AAA	460920003	**184102400**		132361337	**184122380**	
Klz Versys Bff-Bgf	1000	2015	2016	LZT00BBA	460920031	**184102100**		-	**-**	
Klz Versys Bhf-Bjf-Bjfa	1000	2017	2018	LZT00BBA	460920031	**184102100**		-	**-**	
Ninja Zx-10R Abs Kbf-Kcf-Kdf-Kef	1000	2011	2014	ZXT00JKA	460920006	**184102410**		132360103	**184122390**	
Ninja Zx-10R Abs Kff-Kffa	1000	2015	2015	ZXT00JKA	460920006	**184102410**		132360103	**184122390**	
Ninja Zx-10R C1H	1000	2004	2004	ZXT00CCA	460920006	**184102410**		-	**-**	
Ninja Zx-10R C2H	1000	2005	2005	ZXT00CCA	460920006	**184102410**		-	**-**	
Ninja Zx-10R D6F-D7F	1000	2006	2007	ZXT00DDA	460920006	**184102410**		132360103	**184122390**	
Ninja Zx-10R E8F-E9F	1000	2008	2009	ZXT00DEA	460920006	**184102410**		132360103	**184122390**	
Ninja Zx-10R Faf	1000	2010	2010	ZXT00FFA	460920006	**184102410**		132360103	**184122390**	
Ninja Zx-10R Jbf-Jcf-Jdf-Jef	1000	2011	2014	ZXT00JJA	460920006	**184102410**		132360103	**184122390**	
Ninja Zx-10R Jff-Jffa	1000	2015	2015	ZXT00JJA	460920006	**184102410**		132360103	**184122390**	
Z1000 A1H-A3H	1000	2003	2005	ZRT00AAA	460920003	**184102400**		132361337	**184122380**	
Z1000 A6F	1000	2006	2006	ZRT00AAA	460920003	**184102400**		132361337	**184122380**	
Z1000 Abs C7F-C9F	1000	2007	2009	ZRT00BCA	460920003	**184102400**		132360139	**184122630**	
Z1000 Abs Eaf-Ebf-Ecf-Ecfa	1000	2010	2012	ZRT00DEA	460920003	**184102400**		132360139	**184122630**	
Z1000 Abs Edf-Edfa	1000	2013	2013	ZRT00DEA	460920003	**184102400**		132360139	**184122630**	



Modello *Model*	CC	Da *From*	A *To*	Telaio *Frame*	OEM Leva sx *Left Lever OEM Number*	Leva sinistra *Left Lever*	Note leva sinistra *Left Lever Notes*	OEM Leva dx *Right Lever OEM Number*	Leva destra *Right Lever*	Note leva destra *Right Lever Notes*
Z1000 Abs Gef-Gefa-Gff-Ggf	1000	2014	2016	ZRT00FGA	460920006	**184102410**		-	**-**	
Z1000 B7F-B9F	1000	2007	2009	ZRT00BBA	460920003	**184102400**		132360139	**184122630**	
Z1000 Daf-Das-Dbf-Dcf-Dcfa	1000	2010	2012	ZRT00DDA	460920003	**184102400**		132360139	**184122630**	
Z1000 Ddf-Ddfa	1000	2013	2013	ZRT00DDA	460920003	**184102400**		132360139	**184122630**	
Z1000 Fef-Fefa-Fff-Fgf	1000	2014	2016	ZRT00FFA	460920006	**184102410**		-	**-**	
Z1000Sx Abs Hbf-Hcf-Hdf	1000	2011	2013	ZXT00GHA	460920006	**184102410**		132360103	**184122390**	
Z1000Sx Abs Mef-Mff-Mgf	1000	2014	2016	ZXT00LMA	460920006	**184102410**		132360103	**184122390**	
Z1000Sx Gbf-Gcf-Gdf	1000	2011	2013	ZXT00GGA	460920006	**184102410**		132360103	**184122390**	
Z1000Sx Lef-Lff-Lgf	1000	2014	2016	ZXT00LLA	460920006	**184102410**		132360103	**184122390**	
Zx 10 B1-B3	1000	1988	1990	ZXT00B	132361186	**184102140**		132361185	**184122100**	
Gpz E1-E2	1100	1995	1997	ZX10E	132361186	**184102140**		132361185	**184122100**	
Zrx D1-D3	1100	1997	1999	ZRT10CDA	132361186	**184102140**		132361185	**184122100**	
Zzr C1-C2	1100	1990	1991	ZXT10C	132361186	**184102140**		132361185	**184122100**	
Zzr C3	1100	1992	1992	ZXT10C	132361186	**184102140**		132361185	**184122100**	
Zzr D1-D2	1100	1993	1994	ZXT10D	132361186	**184102140**		132361185	**184122100**	
Zzr D3-D4	1100	1995	1996	ZXT10D	132361186	**184102140**		132361185	**184122100**	
Zzr D5-D6	1100	1997	1998	ZXT10D	132361186	**184102140**		132361185	**184122100**	
Zzr D7	1100	1999	1999	ZXT10D	132361186	**184102140**		132361185	**184122100**	
Zzr C1H-C2H	1200	2002	2003	ZXT20CCA	132361186	**184102140**		132361185	**184122100**	
Zzr C4H	1200	2005	2005	ZXT20CCA	132361282	**184102130**		132361337	**184122380**	
Vn Classic D1-D2	1500	1996	1997	VNT50A	132361282	**184102130**		132361287	**184122120**	
Vn Classic E1	1500	1998	1998	VNT50A	132361282	**184102130**		132361287	**184122120**	
Vn Classic E2	1500	1999	1999	VNT50AEA	132361282	**184102130**		132361287	**184122120**	
KEEWAY										
F-Act	50	2007	2008	SFCS005003	40002BM0T000	**184102490**		45022J3AT000	**184122360**	
F-Act Evo	50	2009	2009	SFCS005005	40002BM0T000	**184102490**		45022J3AT000	**184122360**	
Focus	50	2006	2006	TSYTABMP1	40002BM0T000	**184102490**		45022J3AT000	**184122360**	
Hurricane	50	2006	2006	TSYTAB201	40002BM0T000	**184102490**		45022J3AT000	**184122360**	
Hurricane	50	2007	2008	SHRC005001	40002BM0T000	**184102490**		45022J3AT000	**184122360**	
Ry6	50	2010	2010	SRY6005000	40002BM0T000	**184102490**		-	**-**	
Ry8	50	2008	2008	SRY8005000	40002BM0T000	**184102490**		45022J3AT000	**184122360**	
Ry8 Sport	50	2007	2010	SRY8005001	40002BM0T000	**184102490**		45022J3AT000	**184122360**	
F-Act	125	2007	2008	SFCS012501	40002BM0T000	**184102490**		45022J3AT000	**184122360**	
Focus	125	2006	2006	TSYTEJ5B2	40002BM0T000	**184102490**		45022J3AT000	**184122360**	
F-Act	150	2007	2008	SFCS015001	40002BM0T000	**184102490**		45022J3AT000	**184122360**	
Focus	150	2006	2006	TSYTEJ5B1	40002BM0T000	**184102490**		45022J3AT000	**184122360**	
KTM										
Sx 65	65	2004	2013	-	59002031000	**184102310**	Standard	-	**-**	
Sx 65	65	2004	2013	-	54602031000	**184102330**	Corta	-	**-**	
Sx 85	85	2003	2006	-	59002031000	**184102310**	Standard	-	**-**	
Sx 85	85	2003	2006	-	54602031000	**184102330**	Corta	-	**-**	
Sx 85 17/14 Wheel	85	2007	2012	-	59002031000	**184102310**	Standard	-	**-**	
Sx 85 17/14 Wheel	85	2007	2012	-	54602031000	**184102330**	Corta	-	**-**	
Egs 125 2T	125	1994	1999	-	-	**-**		50313002100	**184122110**	
Exc 125 2T	125	2001	2008	-	59002031000	**184102310**	Standard	50313002100	**184122110**	
Exc 125 2T	125	2001	2008	-	54602031000	**184102330**	Corta	50313002100	**184122110**	
Exc 125 2T Sixdays	125	2009	2011	-	54802031000	**184102360**		54813002100	**184122330**	
Exe 125 2T	125	2000	2001	-	59002031000	**184102310**	Standard	50213020000	**184122010**	
Exe 125 2T	125	2000	2001	-	54602031000	**184102330**	Corta	50213020000	**184122010**	
Exe 125 2T Supermoto	125	2000	2001	-	59002031000	**184102310**	Standard	50213020000	**184122010**	
Exe 125 2T Supermoto	125	2000	2001	-	54602031000	**184102330**	Corta	50213020000	**184122010**	
Lc2 125 2T	125	1996	2000	-	-	**-**		50313002100	**184122110**	



LEVE

LEVERS

Modello *Model*	**CC**	**Da** *From*	**A** *To*	**Telaio** *Frame*	**OEM Leva sx** *Left Lever OEM Number*	**Leva sinistra** *Left Lever*	**Note leva sinistra** *Left Lever Notes*	**OEM Leva dx** *Right Lever OEM Number*	**Leva destra** *Right Lever*	**Note leva destra** *Right Lever Notes*
Sx 125 2T	125	2001	2008	-	59002031000	**184102310**	Standard	50313002100	**184122110**	
Sx 125 2T	125	2001	2008	-	54602031000	**184102330**	Corta	50313002100	**184122110**	
Egs 200 2T	200	1998	1999	-	-	**-**		50313002100	**184122110**	
Exc 200 2T	200	1998	1998	-	54802031000	**184102360**		50213020000	**184122010**	
Exc 200 2T	200	2001	2008	-	59002031000	**184102310**	Standard	50313002100	**184122110**	
Exc 200 2T	200	2001	2008	-	54602031000	**184102330**	Corta	50313002100	**184122110**	
Sx 200 2T	200	2003	2004	-	59002031000	**184102310**	Standard	50313002100	**184122110**	
Sx 200 2T	200	2003	2004	-	54602031000	**184102330**	Corta	50313002100	**184122110**	
Egs 250 2T	250	1995	1999	-	-	**-**		50313002100	**184122110**	
Exc 250 2T	250	2001	2005	-	59002031000	**184102310**	Standard	50313002100	**184122110**	
Exc 250 2T	250	2001	2005	-	54602031000	**184102330**	Corta	50313002100	**184122110**	
Exc 250 2T	250	2006	2013	-	54802031000	**184102360**		54813002100	**184122330**	
Exc 250 2T	250	2014	2014	-	54802031000	**184102360**		-	**-**	
Exc 250 2T Sixdays	250	2009	2013	-	54802031000	**184102360**		54813002100	**184122330**	
Exc 250 2T Sixdays	250	2014	2014	-	54802031000	**184102360**		-	**-**	
Exc 250 4T Racing	250	2002	2005	-	59002031000	**184102310**	Standard	50313002100	**184122110**	
Exc 250 4T Racing	250	2002	2005	-	54602031000	**184102330**	Corta	50313002100	**184122110**	
Exc 250 4T Racing	250	2006	2006	-	54802031000	**184102360**		54813002100	**184122330**	
Exc-F 250 4T	250	2007	2010	-	54802031000	**184102360**		54813002100	**184122330**	
Exc-F 250 4T Sixdays	250	2009	2010	-	54802031000	**184102360**		54813002100	**184122330**	
Exc-F 250 Ie4T	250	2011	2013	-	54802031000	**184102360**		54813002100	**184122330**	
Exc-F 250 Ie4T	250	2014	2014	-	54802031000	**184102360**		-	**-**	
Exc-F 250 Ie4T Sixdays	250	2011	2013	-	54802031000	**184102360**		54813002100	**184122330**	
Exc-F 250 Ie4T Sixdays	250	2014	2014	-	54802031000	**184102360**		-	**-**	
Sx 250 2T	250	2001	2005	-	59002031000	**184102310**	Standard	50313002100	**184122110**	
Sx 250 2T	250	2001	2005	-	54602031000	**184102330**	Corta	50313002100	**184122110**	
Sx 250 2T	250	2006	2013	-	54802031000	**184102360**		54813002100	**184122330**	
Sx 250 2T	250	2014	2014	-	54802031000	**184102360**		-	**-**	
Sx-F 250 4T	250	2006	2006	-	59002031000	**184102310**	Standard	54813002100	**184122330**	
Sx-F 250 4T	250	2006	2006	-	54602031000	**184102330**	Corta	54813002100	**184122330**	
Sx-F 250 4T	250	2007	2010	-	54802031000	**184102360**		54813002100	**184122330**	
Sx-F 250 Ie4T	250	2011	2013	-	54802031000	**184102360**		54813002100	**184122330**	
Sx-F 250 Ie4T	250	2014	2014	-	54802031000	**184102360**		-	**-**	
Egs 300 2T	300	1995	1999	-	-	**-**		50313002100	**184122110**	
Exc 300 2T	300	2001	2005	-	59002031000	**184102310**	Standard	50313002100	**184122110**	
Exc 300 2T	300	2001	2005	-	54602031000	**184102330**	Corta	50313002100	**184122110**	
Exc 300 2T	300	2006	2007	-	54802031000	**184102360**		54813002100	**184122330**	
Exc-E 300 2T	300	2007	2013	-	54802031000	**184102360**		54813002100	**184122330**	
Exc-E 300 2T	300	2014	2014	-	54802031000	**184102360**		-	**-**	
Exc-E 300 2T Sixdays	300	2009	2013	-	54802031000	**184102360**		54813002100	**184122330**	
Exc-E 300 2T Sixdays	300	2014	2014	-	54802031000	**184102360**		-	**-**	
Sx 300 2T	300	1995	1995	-	-	**-**		50313002100	**184122110**	
Exc-F 350 Ie4T	350	2012	2013	-	54802031000	**184102360**		54813002100	**184122330**	
Exc-F 350 Ie4T	350	2014	2014	-	54802031000	**184102360**		-	**-**	
Exc-F 350 Ie4T Sixdays	350	2012	2013	-	54802031000	**184102360**		54813002100	**184122330**	
Exc-F 350 Ie4T Sixdays	350	2014	2014	-	54802031000	**184102360**		-	**-**	
Sc 350 Lc4 Super Competition	350	1995	1995	-	-	**-**		50313002100	**184122110**	
Sx-F 350 Ie 4T	350	2011	2013	-	54802031000	**184102360**		54813002100	**184122330**	
Sx-F 350 Ie 4T	350	2014	2014	-	54802031000	**184102360**		-	**-**	
Egs 360 2T	360	1996	1996	-	-	**-**		50313002100	**184122110**	
Egs 360 2T	360	1996	1997	-	-	**-**		50313002100	**184122110**	
Egs 360 2T	360	1997	1997	-	-	**-**		50313002100	**184122110**	



Modello *Model*	CC	Da *From*	A *To*	Telaio *Frame*	OEM Leva sx *Left Lever OEM Number*	Leva sinistra *Left Lever*	Note leva sinistra *Left Lever Notes*	OEM Leva dx *Right Lever OEM Number*	Leva destra *Right Lever*	Note leva destra *Right Lever Notes*
Sx 360 2T	360	1996	1997	-	-	**-**		50313002100	**184122110**	
Egs 380 2T	380	1998	1999	-	-	**-**		50313002100	**184122110**	
Exc 380 2T	380	2001	2001	-	59002031000	**184102310**	Standard	50313002100	**184122110**	
Exc 380 2T	380	2001	2001	-	54602031000	**184102330**	Corta	50313002100	**184122110**	
Sx 380 2T	380	2001	2002	-	59002031000	**184102310**	Standard	50313002100	**184122110**	
Sx 380 2T	380	2001	2002	-	54602031000	**184102330**	Corta	50313002100	**184122110**	
Egs 400 Lc4	400	1995	1997	-	-	**-**		50313002100	**184122110**	
Egs-E 400 Lc4	400	1997	1997	-	-	**-**		50313002100	**184122110**	
Exc 400	400	2009	2011	-	54802031000	**184102360**		54813002100	**184122330**	
Exc 400 Racing	400	2001	2001	-	59002031000	**184102310**	Standard	-	**-**	
Exc 400 Racing	400	2001	2001	-	54602031000	**184102330**	Corta	-	**-**	
Exc 400 Racing	400	2002	2004	-	54802031000	**184102360**		50313002100	**184122110**	
Exc 400 Racing	400	2005	2005	-	59002031000	**184102310**	Standard	54813002100	**184122330**	
Exc 400 Racing	400	2005	2005	-	54602031000	**184102330**	Corta	54813002100	**184122330**	
Exc 400 Racing	400	2006	2007	-	54802031000	**184102360**		54813002100	**184122330**	
Lc4 400	400	1998	1998	-	-	**-**		50313002100	**184122110**	
Lc4-E 400	400	1998	2001	-	-	**-**		50313002100	**184122110**	
Lc4-E 400 Lse	400	1997	1998	-	-	**-**		50313002100	**184122110**	
Sc 400 Lc4 Super Competition	400	1995	1999	-	-	**-**		50313002100	**184122110**	
Sx 400 Racing	400	2001	2002	-	59002031000	**184102310**	Standard	50313002100	**184122110**	
Sx 400 Racing	400	2001	2002	-	54602031000	**184102330**	Corta	50313002100	**184122110**	
Sxc 400	400	1997	1998	-	-	**-**		50313002100	**184122110**	
Sxc 400 Tiainen	400	1999	1999	-	-	**-**		50313002100	**184122110**	
Exc 450	450	2009	2011	-	54802031000	**184102360**		54813002100	**184122330**	
Exc 450 Ie	450	2012	2013	-	54802031000	**184102360**		54813002100	**184122330**	
Exc 450 Ie	450	2014	2014	-	54802031000	**184102360**		-	**-**	
Exc 450 Ie Sixdays	450	2012	2013	-	54802031000	**184102360**		54813002100	**184122330**	
Exc 450 Ie Sixdays	450	2014	2014	-	54802031000	**184102360**		-	**-**	
Exc 450 R	450	2008	2008	-	54802031000	**184102360**		54813002100	**184122330**	
Exc 450 Racing	450	2003	2005	-	59002031000	**184102310**	Standard	50313002100	**184122110**	
Exc 450 Racing	450	2003	2005	-	54602031000	**184102330**	Corta	50313002100	**184122110**	
Exc 450 Racing	450	2006	2007	-	54802031000	**184102360**		54813002100	**184122330**	
Exc 450 Sixdays	450	2009	2011	-	54802031000	**184102360**		54813002100	**184122330**	
Smr 450 Ie Supermoto	450	2013	2014	-	54802031000	**184102360**		-	**-**	
Smr 450 Supermoto	450	2005	2008	-	59002031000	**184102310**	Standard	-	**-**	
Smr 450 Supermoto	450	2005	2008	-	54602031000	**184102330**	Corta	-	**-**	
Sx 450 Racing	450	2003	2006	-	59002031000	**184102310**	Standard	50313002100	**184122110**	
Sx 450 Racing	450	2003	2006	-	54602031000	**184102330**	Corta	50313002100	**184122110**	
Sx-F 450 Ie	450	2013	2013	-	54802031000	**184102360**		54813002100	**184122330**	
Sx-F 450 Ie	450	2014	2014	-	54802031000	**184102360**		-	**-**	
Sx-F 450 Racing	450	2007	2008	-	59002031000	**184102310**	Standard	54813002100	**184122330**	
Sx-F 450 Racing	450	2007	2008	-	54602031000	**184102330**	Corta	54813002100	**184122330**	
Exc 500 Ie	500	2012	2013	-	54802031000	**184102360**		54813002100	**184122330**	
Exc 500 Ie	500	2014	2014	-	54802031000	**184102360**		-	**-**	
Exc 500 Ie Sixdays	500	2012	2013	-	54802031000	**184102360**		54813002100	**184122330**	
Exc 500 Ie Sixdays	500	2014	2014	-	54802031000	**184102360**		-	**-**	
Sx 500 2T	500	1995	1995	-	-	**-**		50313002100	**184122110**	
Sx-F 505 Racing	505	2007	2008	-	59002031000	**184102310**	Standard	54813002100	**184122330**	
Sx-F 505 Racing	505	2007	2008	-	54602031000	**184102330**	Corta	54813002100	**184122330**	
Exc 520 Racing	520	2001	2002	-	59002031000	**184102310**	Standard	50313002100	**184122110**	
Exc 520 Racing	520	2001	2002	-	54602031000	**184102330**	Corta	50313002100	**184122110**	
Sx 520 Racing	520	2001	2002	-	59002031000	**184102310**	Standard	50313002100	**184122110**	
Sx 520 Racing	520	2001	2002	-	54602031000	**184102330**	Corta	50313002100	**184122110**	
Exc 525 Racing	525	2003	2005	-	59002031000	**184102310**	Standard	50313002100	**184122110**	
Exc 525 Racing	525	2003	2005	-	54602031000	**184102330**	Corta	50313002100	**184122110**	
Exc 525 Racing	525	2006	2006	-	54802031000	**184102360**		-	**-**	



LEVE

LEVERS

Modello *Model*	**CC**	**Da** *From*	**A** *To*	**Telaio** *Frame*	**OEM Leva sx** *Left Lever OEM Number*	**Leva sinistra** *Left Lever*	**Note leva sinistra** *Left Lever Notes*	**OEM Leva dx** *Right Lever OEM Number*	**Leva destra** *Right Lever*	**Note leva destra** *Right Lever Notes*
Exc 525 Racing	525	2007	2007	-	54802031000	**184102360**		54813002100	**184122330**	
Mxc 525 Desert Racing	525	2003	2005	-	59002031000	**184102310**	Standard	50313002100	**184122110**	
Mxc 525 Desert Racing	525	2003	2005	-	54602031000	**184102330**	Corta	50313002100	**184122110**	
Smr 525 Supermoto	525	2004	2005	-	59002031000	**184102310**	Standard	-	-	
Smr 525 Supermoto	525	2004	2005	-	54602031000	**184102330**	Corta	-	-	
Sx 525 Racing	525	2003	2004	-	59002031000	**184102310**	Standard	50313002100	**184122110**	
Sx 525 Racing	525	2003	2004	-	54602031000	**184102330**	Corta	50313002100	**184122110**	
Sx 525 Racing	525	2005	2006	-	59002031000	**184102310**	Standard	54813002100	**184122330**	
Sx 525 Racing	525	2005	2006	-	54602031000	**184102330**	Corta	54813002100	**184122330**	
Xc 525 Desert Racing	525	2006	2006	-	59002031000	**184102310**	Standard	-	-	
Xc 525 Desert Racing	525	2006	2006	-	54602031000	**184102330**	Corta	-	-	
Xc 525 Desert Racing	525	2007	2007	-	59002031000	**184102310**	Standard	54813002100	**184122330**	
Xc 525 Desert Racing	525	2007	2007	-	54602031000	**184102330**	Corta	54813002100	**184122330**	
Exc 530	530	2009	2011	-	54802031000	**184102360**		54813002100	**184122330**	
Exc 530 R	530	2008	2008	-	54802031000	**184102360**		54813002100	**184122330**	
Exc 530 Sixdays	530	2009	2011	-	54802031000	**184102360**		54813002100	**184122330**	
Sxc 540	540	1998	1998	-	-	-		50313002100	**184122110**	
Sxc 540 Tiainen	540	1999	1999	-	-	-		50313002100	**184122110**	
Smr 560 Supermoto	560	2006	2006	-	59002031000	**184102310**	Standard	-	-	
Smr 560 Supermoto	560	2006	2006	-	54602031000	**184102330**	Corta	-	-	
Smr 560 Supermoto	560	2007	2007	-	59002031000	**184102310**	Standard	-	-	
Smr 560 Supermoto	560	2007	2007	-	54602031000	**184102330**	Corta	-	-	
Egs 620 Lc4	620	1995	1998	-	-	-		50313002100	**184122110**	
Egs 620 Lc4 Dakar	620	1995	1995	-	-	-		50313002100	**184122110**	
Egs 620 Lc4 Lse	620	1997	1998	-	-	-		50313002100	**184122110**	
Egs 620 Lc4 Supermoto	620	1998	1998	-	-	-		50313002100	**184122110**	
Egs 620 Lc4-E	620	1997	1998	-	-	-		50313002100	**184122110**	
Egs 620 Lc4-E Adventure	620	1997	1998	-	-	-		50313002100	**184122110**	
Sc 620 Lc4 Super Competition	620	1994	2001	-	-	-		50313002100	**184122110**	
Sc 620 Lc4 Supermoto	620	2000	2001	-	-	-		50313002100	**184122110**	
Sx 620 Lc4	620	1994	1999	-	-	-		50313002100	**184122110**	
Sxc 620 Lc4	620	1997	1997	-	-	-		50313002100	**184122110**	
Smc 625 Supermoto	625	2004	2006	-	59002031000	**184102310**	Standard	-	-	
Smc 625 Supermoto	625	2004	2006	-	54602031000	**184102330**	Corta	-	-	
Sxc 625	625	2003	2006	-	59002031000	**184102310**	Standard	50313002100	**184122110**	
Sxc 625	625	2003	2006	-	54602031000	**184102330**	Corta	50313002100	**184122110**	
Adventure 640 Lc4	640	2003	2007	-	59002031000	**184102310**	Standard	-	-	
Adventure 640 Lc4	640	2003	2007	-	54602031000	**184102330**	Corta	-	-	
Adventure 640 R	640	1999	2000	-	-	-		50313002100	**184122110**	
Duke Ii 640 E	640	2003	2007	-	59002031000	**184102310**	Standard	-	-	
Duke Ii 640 E	640	2003	2007	-	54602031000	**184102330**	Corta	-	-	
Lc4-E 640	640	2003	2004	-	59002031000	**184102310**	Standard	50313002100	**184122110**	
Lc4-E 640	640	2003	2004	-	54602031000	**184102330**	Corta	50313002100	**184122110**	
Lc4-E 640	640	2005	2006	-	59002031000	**184102310**	Standard	-	-	
Lc4-E 640	640	2005	2006	-	54602031000	**184102330**	Corta	-	-	
Lc4-E 640 Supermoto	640	2003	2006	-	59002031000	**184102310**	Standard	-	-	
Lc4-E 640 Supermoto	640	2003	2006	-	54602031000	**184102330**	Corta	-	-	
Smc 660 Supermoto	660	2003	2006	-	59002031000	**184102310**	Standard	-	-	



Modello *Model*	**CC**	**Da** *From*	**A** *To*	**Telaio** *Frame*	**OEM Leva sx** *Left Lever OEM Number*	**Leva sinistra** *Left Lever*	**Note leva sinistra** *Left Lever Notes*	**OEM Leva dx** *Right Lever OEM Number*	**Leva destra** *Right Lever*	**Note leva destra** *Right Lever Notes*
Smc 660 Supermoto	660	2003	2006	-	54602031000	**184102330**	Corta	-	**-**	
Duke 690 Abs	690	2012	2013	-	59002031000	**184102310**	Standard	-	**-**	
Duke 690 Abs	690	2012	2013	-	54602031000	**184102330**	Corta	-	**-**	
Duke 690 R Abs	690	2013	2013	-	59002031000	**184102310**	Standard	61013002044	**184122280**	
Duke 690 R Abs	690	2013	2013	-	54602031000	**184102330**	Corta	61013002044	**184122280**	
Enduro 690	690	2009	2010	-	59002031000	**184102310**	Standard	50213020000	**184122010**	
Enduro 690	690	2009	2010	-	54602031000	**184102330**	Corta	50213020000	**184122010**	
Enduro 690 R	690	2009	2012	-	59002031000	**184102310**	Standard	50213020000	**184122010**	
Enduro 690 R	690	2009	2012	-	54602031000	**184102330**	Corta	50213020000	**184122010**	
Rally Factory Replica 690	690	2009	2010	-	59002031000	**184102310**	Standard	50313002100	**184122110**	
Rally Factory Replica 690	690	2009	2010	-	54602031000	**184102330**	Corta	50313002100	**184122110**	
Smc 690 R Supermoto	690	2012	2012	-	59002031000	**184102310**	Standard	-	**-**	
Smc 690 R Supermoto	690	2012	2012	-	54602031000	**184102330**	Corta	-	**-**	
Smc 690 Supermoto	690	2008	2011	-	59002031000	**184102310**	Standard	-	**-**	
Smc 690 Supermoto	690	2008	2011	-	54602031000	**184102330**	Corta	-	**-**	
Supermoto 690	690	2007	2009	-	59002031000	**184102310**	Standard	-	**-**	
Supermoto 690	690	2007	2009	-	54602031000	**184102330**	Corta	-	**-**	
Supermoto 690 Prestige	690	2007	2007	-	59002031000	**184102310**	Standard	-	**-**	
Supermoto 690 Prestige	690	2007	2007	-	54602031000	**184102330**	Corta	-	**-**	
Supermoto 690 R	690	2008	2010	-	59002031000	**184102310**	Standard	-	**-**	
Supermoto 690 R	690	2008	2010	-	54602031000	**184102330**	Corta	-	**-**	
Adventure 950 Lc8	950	2003	2005	-	59002031000	**184102310**	Standard	-	**-**	
Adventure 950 Lc8	950	2003	2005	-	54602031000	**184102330**	Corta	-	**-**	
Adventure 950 S Lc8	950	2003	2005	-	59002031000	**184102310**	Standard	-	**-**	
Adventure 950 S Lc8	950	2003	2005	-	54602031000	**184102330**	Corta	-	**-**	
Super Enduro 950 R Lc8	950	2006	2008	-	59002031000	**184102310**	Standard	50213020000	**184122010**	
Super Enduro 950 R Lc8	950	2006	2008	-	54602031000	**184102330**	Corta	50213020000	**184122010**	
Supermoto 950 Lc8	950	2006	2008	-	59002031000	**184102310**	Standard	-	**-**	
Supermoto 950 Lc8	950	2006	2008	-	54602031000	**184102330**	Corta	-	**-**	
Supermoto 950 R Lc8	950	2007	2008	-	59002031000	**184102310**	Standard	-	**-**	
Supermoto 950 R Lc8	950	2007	2008	-	54602031000	**184102330**	Corta	-	**-**	
Adventure 990 Lc8	990	2006	2007	-	59002031000	**184102310**	Standard	-	**-**	
Adventure 990 Lc8	990	2006	2007	-	54602031000	**184102330**	Corta	-	**-**	
Adventure 990 Lc8 Abs	990	2006	2013	-	59002031000	**184102310**	Standard	-	**-**	
Adventure 990 Lc8 Abs	990	2006	2013	-	54602031000	**184102330**	Corta	-	**-**	
Adventure 990 R Lc8	990	2006	2013	-	59002031000	**184102310**	Standard	-	**-**	
Adventure 990 R Lc8	990	2006	2013	-	54602031000	**184102330**	Corta	-	**-**	
Supermoto 990 Sm R Lc8	990	2009	2011	-	59002031000	**184102310**	Standard	-	**-**	
Supermoto 990 Sm R Lc8	990	2009	2011	-	54602031000	**184102330**	Corta	-	**-**	
Supermoto 990 Sm R Lc8 Abs	990	2012	2013	-	59002031000	**184102310**	Standard	-	**-**	
Supermoto 990 Sm R Lc8 Abs	990	2012	2013	-	54602031000	**184102330**	Corta	-	**-**	



LEVE

LEVERS

Modello *Model*	**CC**	**Da** *From*	**A** *To*	**Telaio** *Frame*	**OEM Leva sx** *Left Lever OEM Number*	**Leva sinistra** *Left Lever*	**Note leva sinistra** *Left Lever Notes*	**OEM Leva dx** *Right Lever OEM Number*	**Leva destra** *Right Lever*	**Note leva destra** *Right Lever Notes*
Supermoto 990 Sm T Lc8	990	2009	2009	-	59002031000	**184102310**	Standard	61013002044	**184122280**	
Supermoto 990 Sm T Lc8	990	2009	2009	-	54602031000	**184102330**	Corta	61013002044	**184122280**	
Supermoto 990 Sm T Lc8	990	2010	2011	-	59002031000	**184102310**	Standard	-	-	
Supermoto 990 Sm T Lc8	990	2010	2011	-	54602031000	**184102330**	Corta	-	-	
Supermoto 990 Sm T Lc8 Abs	990	2011	2013	-	59002031000	**184102310**	Standard	-	-	
Supermoto 990 Sm T Lc8 Abs	990	2011	2013	-	54602031000	**184102330**	Corta	-	-	
Adventure 1190 Abs	1190	2013	2014	-	59002031000	**184102310**	Standard	-	-	
Adventure 1190 Abs	1190	2013	2014	-	54602031000	**184102330**	Corta	-	-	
Adventure 1190 R Abs	1190	2013	2014	-	59002031000	**184102310**	Standard	-	-	
Adventure 1190 R Abs	1190	2013	2014	-	54602031000	**184102330**	Corta	-	-	
KYMCO										
Agility 2T R16	50	2010	2010	C11000	00153308	**184100721**		00153413	**184120761**	
Agility 2T R16	50	2012	2012	C11000	00153759	**184100741**		00153586	**184120581**	
Agility 4T R10	50	2006	2006	U60010	00152580	**184100711**		00153413	**184120761**	
Agility 4T R10	50	2007	2008	U60080	00152580	**184100711**		00153413	**184120761**	
Agility 4T R12	50	2007	2008	U60050	00152161	**184100481**		00153159	**184120581**	
Agility 4T R16	50	2008	2009	C10000	00153308	**184100721**		00153413	**184120761**	
Agility 4T R16	50	2012	2012	C10000	00153759	**184100741**		00153159	**184120581**	
Agility 4T R16 Plus Euro4	50	2019	2019	B1001	00153759	**184100741**		00153413	**184120761**	
Agility Plus 2T	50	2014	2014	13000	00153759	**184100741**		00153159	**184120581**	
Agility Plus 4T	50	2014	2014	12000	00153759	**184100741**		00153159	**184120581**	
Agility R12	50	2005	2005	U60000	00152161	**184100481**		00153159	**184120581**	
B&W	50	2002	2002	S80000	00153902	**184100741**		00153960	**184120571**	
B&W Euro2	50	2003	2003	S80010	00153902	**184100741**		00153960	**184120571**	
Dink Classic Euro2	50	2003	2003	T80000	00153902	**184100741**		00153960	**184120571**	
Dink Lc	50	1998	2002	SH10	00153902	**184100741**		00153960	**184120571**	
Fever Zx	50	1999	2000	SC10AS\SE10CA	00152161	**184100481**		00153760	**184120681**	
Fever Zx Euro2	50	2003	2004	SC10A\S45AW	00152161	**184100481**		00153760	**184120681**	
Mxer	50	2002	2003	L20000	00153984	**184100461**		-	-	
Mxer Euro2	50	2004	2004	L20010	00153984	**184100461**		-	-	
Mxu	50	2006	2007	A10030	00153984	**184100461**		-	-	
Mxu Sr	50	2006	2006	A10010	00153984	**184100461**		-	-	
People	50	1999	2000	B10001	00152050	**184100481**		-	-	
People	50	2004	2004	BA10AG	00152161	**184100481**		-	-	
People Euro2	50	2003	2003	B10020	00152161	**184100481**		-	-	
People Euro2	50	2008	2008	B10020	00152161	**184100481**		-	-	
People Euro2	50	2011	2011	B10020	00152161	**184100481**		-	-	
People S	50	2005	2008	B90000	00153759	**184100741**		00153760	**184120681**	
People S 4T	50	2006	2008	B91000	00153759	**184100741**		00153760	**184120681**	
Sento	50	2008	2008	U80000	00152161	**184100481**		-	-	
Sniper Dd	50	1994	1996	PR50BB	00155603	**184100751**		00154203	**184120761**	
Super 8	50	2007	2007	U70000	00153290	**184100741**		00153159	**184120581**	
Super 8 2T	50	2009	2009	U90000	00153290	**184100741**		00153159	**184120581**	
Super 8 2T	50	2013	2013	U91000	00153759	**184100741**		00153159	**184120581**	
Super 8 4T	50	2009	2009	U70300	00153290	**184100741**		00153159	**184120581**	
Super 8 4T	50	2013	2013	U71000	00153759	**184100741**		00153159	**184120581**	
Super 9	50	2000	2000	S10000	00153372	**184100541**		00153360	**184120681**	
Super 9 Sport Euro2	50	2003	2004	S10020	00153782	**184100541**		00153760	**184120681**	
Top Boy	50	1997	2000	SF10AG\SF10AF	00152580	**184100711**		00153413	**184120761**	
Vitality 2T	50	2004	2004	U30000	00152161	**184100481**		-	-	
Vitality 4T	50	2004	2004	U31000	00152161	**184100481**		-	-	



Modello *Model*	CC	Da *From*	A *To*	Telaio *Frame*	OEM Leva sx *Left Lever OEM Number*	Leva sinistra *Left Lever*	Note leva sinistra *Left Lever Notes*	OEM Leva dx *Right Lever OEM Number*	Leva destra *Right Lever*	Note leva destra *Right Lever Notes*
Yup Euro2	50	2003	2003	S60010	00152161	**184100481**		-	-	
Agility 4T	125	2006	2006	U62000	00152161	**184100481**		00153159	**184120581**	
Agility 4T Euro3	125	2006	2008	U62001	00152161	**184100481**		00153159	**184120581**	
Agility Carry Euro4	125	2017	2017	B2565	00153414	**184100751**		00153413	**184120761**	
Agility Plus	125	2014	2014	C21000	00153782	**184100541**		00153159	**184120581**	
Agility Plus E4	125	2016	2016	C41000	00153782	**184100541**		00153159	**184120581**	
Agility R16	125	2008	2008	C20000	00153414	**184100751**		00153413	**184120761**	
Agility R16	125	2012	2012	C20000	00153782	**184100541**		00153586	**184120581**	
B&W 125-150 Euro2	125	2003	2004	S30011\S30001	00153977	**184100471**		00153960	**184120571**	
Dink 125-150	125	1997	1998	SH25AA\SH30AA	00153984	**184100461**		00156915	**184120461**	
Dink Classic 125-150	125	2002	2002	SH25BB\SH30BB	00153977	**184100471**		00153960	**184120571**	
Dink Lx 125-150	125	1998	2000	SH25BA\SH30BA	00153977	**184100471**		00153960	**184120571**	
Downtown 125I	125	2009	2016	V21000	00153298	**184100761**		00153297	**184120801**	
Grand Dink 125-150 Euro2	125	2003	2004	S40011\S40001	00153977	**184100471**		00153960	**184120571**	
Like	125	2009	2009	D20000	00153782	**184100541**		00153760	**184120681**	
Like Lx	125	2012	2012	D20000	00153782	**184100541**		00153760	**184120681**	
Movie	125	1999	2000	SL25AA	00152161	**184100481**		00153760	**184120681**	
Movie 125 Euro3	125	2006	2007	S50012	00152161	**184100481**		00153760	**184120681**	
Movie XI 125-150	125	2001	2001	S50010\S50000	00152161	**184100481**		00153760	**184120681**	
Movie XI 125-150 Euro2	125	2003	2004	S50011\S50001	00152161	**184100481**		00153760	**184120681**	
People 125-150	125	1999	2000	B20000\B20001	00152050	**184100481**		-	-	
People 125-150 Euro2	125	2003	2003	B20010\B20020	00152050	**184100481**		-	-	
People Euro3	125	2007	2008	B20011	00152161	**184100481**		-	-	
People Euro3	125	2011	2011	B20011	00152161	**184100481**		-	-	
People Gti	125	2010	2010	V41000	00153977	**184100471**		00153960	**184120571**	
People Gti	125	2014	2014	V41000	00153977	**184100471**		00153960	**184120571**	
People One E4	125	2016	2016	D42000	00153782	**184100541**		00153159	**184120581**	
People One I Dd	125	2015	2015	40000	00153782	**184100541**		00153159	**184120581**	
People S	125	2005	2005	D10000	00152161	**184100481**		00153760	**184120681**	
People S Dd Euro3	125	2007	2008	D10000	00153782	**184100541**		00153760	**184120681**	
Super 8	125	2008	2009	U80100	00153290	**184100741**		00153159	**184120581**	
Vivio 125-150	125	2000	2000	SL25AB\SL30AC	00152161	**184100481**		00153760	**184120681**	
Agility R16	150	2008	2008	C30000	00153414	**184100751**		00153413	**184120761**	
Agility R16 Plus E4	150	2016	2016	C42000	00153782	**184100541**		00153159	**184120581**	
B&W 125-150	150	2000	2000	S30010\S30000	00153977	**184100471**		00153960	**184120571**	
Dink Classic 125-150 Euro2	150	2003	2003	SH25BC\SH30BC	00153977	**184100471**		00153960	**184120571**	
Dink Lx 125-150	150	1998	2000	SH25BA\SH30BA	00153974	**184100471**		00153960	**184120571**	
Grand Dink 125-150	150	2001	2002	S40010\S40000	00153977	**184100471**		00153960	**184120571**	
Heroism	150	1995	1997	SE30AD	00155603	**184100751**		00154203	**184120761**	
Movie 150 Euro3	150	2006	2007	S50002	00152161	**184100481**		00153760	**184120681**	
Movie XI 125-150	150	2001	2001	S50010\S50000	00152161	**184100481**		00153760	**184120681**	
Movie XI 125-150 Euro2	150	2003	2004	S50011\S50001	00152161	**184100481**		00153760	**184120681**	
People 125-150	150	1999	2000	B20000\B20001	00152050	**184100481**		-	-	
People 125-150 Euro2	150	2003	2003	B20010\B20020	00152050	**184100481**		-	-	
Vivio 125-150	150	2000	2000	SL25AB\SL30AC	00152161	**184100481**		-	-	
Agility I Plus	200	2014	2014	C32000	00153782	**184100541**		00153159	**184120581**	
Agility R16	200	2012	2012	C31000	00153782	**184100541**		00153586	**184120581**	
Dink Classic	200	2004	2004	SH40AA	00153977	**184100471**		00153960	**184120571**	
Downtown I	200	2010	2010	V22000	00153298	**184100761**		00153297	**184120801**	
Like 200I	200	2009	2009	D21000	00153782	**184100541**		00153760	**184120681**	
Like Lx	200	2012	2012	D21000	00153782	**184100541**		00153760	**184120681**	
People Gti	200	2010	2010	V42000	00153977	**184100471**		00153960	**184120571**	
People Gti	200	2014	2014	V42000	00153977	**184100471**		00153960	**184120571**	



LEVE

LEVERS

Modello *Model*	**CC**	**Da** *From*	**A** *To*	**Telaio** *Frame*	**OEM Leva sx** *Left Lever OEM Number*	**Leva sinistra** *Left Lever*	**Note leva sinistra** *Left Lever Notes*	**OEM Leva dx** *Right Lever OEM Number*	**Leva destra** *Right Lever*	**Note leva destra** *Right Lever Notes*
People S	200	2005	2005	D11000	00152161	**184100481**		00153760	**184120681**	
People S 200I	200	2007	2007	D12000	00153782	**184100541**		00153760	**184120681**	
B&W	250	2000	2000	S70000	00153977	**184100471**		00153960	**184120571**	
B&W Euro2	250	2003	2003	S70011	00153977	**184100471**		00153960	**184120571**	
Grand Dink	250	2001	2002	S41000	00153977	**184100471**		00153960	**184120571**	
Grand Dink Euro2	250	2003	2004	S41011	00153977	**184100471**		00153960	**184120571**	
People Lc	250	2003	2004	B50000	00153977	**184100471**		00153960	**184120571**	
People S	250	2006	2006	D20000	00153977	**184100471**		00153960	**184120571**	
People S 250I	250	2007	2007	D21000	00153977	**184100471**		00153960	**184120571**	
Yup	250	2003	2003	U20000	00153977	**184100471**		00153960	**184120571**	
Downtown 300I	300	2009	2009	V20000	00153298	**184100761**		00153297	**184120801**	
Downtown Abs	300	2010	2010	V20010	00153298	**184100761**		00153297	**184120801**	
Downtown Abs I	300	2011	2016	V20030	00153298	**184100761**		00153297	**184120801**	
Downtown I	300	2011	2011	V20020	00153298	**184100761**		00153297	**184120801**	
People Gti	300	2010	2010	V40000	00153977	**184100471**		00153960	**184120571**	
People Gti	300	2011	2011	V40020	00153977	**184100471**		00153960	**184120571**	
People Gti	300	2014	2014	V40020	00153977	**184100471**		00153960	**184120571**	
People Gti Abs	300	2012	2012	V40010	00153977	**184100471**		00153960	**184120571**	
People Gti Abs	300	2014	2014	V40010	00153977	**184100471**		00153960	**184120571**	
People Gti Abs E4	300	2016	2016	C80000	00153977	**184100471**		00153960	**184120571**	
People S 300I	300	2008	2008	D22000	00153977	**184100471**		00153960	**184120571**	
X Citing 300I	300	2008	2008	T72000	00153298	**184100761**		00153297	**184120801**	
X Citing 300I R	300	2008	2008	T72001	00153298	**184100761**		00153297	**184120801**	
X Citing 300I R	300	2009	2009	T72011	00153298	**184100761**		00153297	**184120801**	
Mxu Irs	500	2010	2010	A50100	00153984	**184100461**		-	-	
Mxu 700I	700	2013	2013	A50311	00153782	**184100541**		-	-	
Myroad I	700	2011	2011	V30000	00153298	**184100761**		00153297	**184120801**	
MALAGUTI										
Centro 4T	50	2008	2008	870201	12120903	**184100651**		12121003	**184120771**	
Centro SI	50	1994	1998	36T	12113303	**184100361**		12110703	**184120411**	
Centro SI 4T	50	2010	2010	870201	12120903	**184100651**		12121003	**184120771**	
Centro SI Kat	50	1999	2000	4900000	12113303	**184100361**		12113203	**184120411**	
Ciak	50	1999	2000	5200000	12113303	**184100361**		12113203	**184120411**	
Ciak Master 4T	50	2005	2006	770201	12113303	**184100361**		12113203	**184120411**	
Ciak Master Euro 2	50	2006	2006	64000	12113303	**184100361**		12113203	**184120411**	
Ciak Mono Euro 2	50	2003	2003	-	12113303	**184100361**		12113203	**184120411**	
Ciak Mono Euro 2 2.3	50	2003	2003	-	12113303	**184100361**		12113203	**184120411**	
Ciak Td	50	2000	2001	5200000	12114203	**184100631**		12113203	**184120411**	
Crosser Cr1	50	1995	1998	43	12113303	**184100361**		12113203	**184120411**	
F10 Ac	50	2008	2008	880201	12113303	**184100361**		12113203	**184120411**	
F10 Ac Eco	50	2009	2010	88003	12113303	**184100361**		12121003	**184120771**	
F10 Jet Line	50	1992	1998	35	12113303	**184100361**		12110703	**184120411**	
F10 Kat	50	1999	2000	48	12113303	**184100361**		12113203	**184120411**	
F10 Restyling Eu1	50	2001	2002	48	12113303	**184100361**		12113203	**184120411**	
F10 Restyling Eu2-2.3	50	2003	2004	48\48000	12113303	**184100361**		12113203	**184120411**	
F10 Restyling Euro2	50	2002	2003	48000	12113303	**184100361**		12113203	**184120411**	
F10 Restyling Euro2	50	2006	2006	48000	12113303	**184100361**		12113203	**184120411**	
F12 Aria Restyling Euro 2	50	2006	2006	46000	12113303	**184100361**		12113203	**184120411**	
F12 Lc Restyling Euro 2	50	2006	2006	62000	12114203	**184100631**		12113203	**184120411**	
F12 Phantom	50	1994	1998	40	12113303	**184100361**		12113203	**184120411**	
F12 Phantom Euro1	50	1999	2000	4600000	12113303	**184100361**		12113203	**184120411**	
F12 Phantom Lc	50	1994	1998	41	12113303	**184100361**		12113203	**184120411**	
F12 Phantom Lc Euro1	50	1999	2000	4700000	12114203	**184100631**		12113203	**184120411**	
F12 Phantom Lc Restyling Eu1	50	2001	2002	4700000	12114203	**184100631**		12113203	**184120411**	



Modello *Model*	CC	Da *From*	A *To*	Telaio *Frame*	OEM Leva sx *Left Lever OEM Number*	Leva sinistra *Left Lever*	Note leva sinistra *Left Lever Notes*	OEM Leva dx *Right Lever OEM Number*	Leva destra *Right Lever*	Note leva destra *Right Lever Notes*
F12 Phantom Lc Restyling Eu2	50	2002	2002	6200000	12114203	**184100631**		12113203	**184120411**	
F12 Phantom Lc Restyling Eu2-2.3	50	2003	2004	6200000	12114203	**184100631**		12113203	**184120411**	
F12 Phantom Lc Twin Disks	50	1998	1998	41	12114203	**184100631**		12113203	**184120411**	
F12 Phantom Restyling Eu1	50	2001	2002	4600000	12113303	**184100361**		12113203	**184120411**	
F12 Phantom Restyling Eu2	50	2002	2002	4600000	12113303	**184100361**		12113203	**184120411**	
F12 Phantom Restyling Eu2-2.3	50	2003	2004	4600000	12113303	**184100361**		12113203	**184120411**	
F12R Phantom Ac	50	2007	2008	830201	12120703	**184100671**		12113203	**184120411**	
F12R Phantom Ac	50	2009	2010	830201	12120903	**184100651**		12121003	**184120771**	
F12R Phantom Lc	50	2007	2010	8201	12114203	**184100631**		12113203	**184120411**	
F12R Phantom Lc	50	2007	2010	8201	12121103	**184100641**		12121003	**184120771**	
F15 Fire Fox	50	1996	1998	44	12113303	**184100361**		12113203	**184120411**	
F15 Fire Fox Air Cooled	50	2005	2006	73K20173	12113303	**184100361**		12113203	**184120411**	
F15 Fire Fox Euro2	50	2002	2003	44	12114203	**184100631**		12113203	**184120411**	
F15 Fire Fox Restyling Euro2-2.3	50	2003	2004	44	12114203	**184100631**		12113203	**184120411**	
F15 Fire Fox Twin Disks & Special	50	1998	1999	44	12114203	**184100631**		12113203	**184120411**	
F15 Fire Fox Twin Disks Digit Kat	50	1998	2000	4400000	12114203	**184100631**		12113203	**184120411**	
F15 Lc Restyling Euro 2	50	2004	2005	44000044	12114203	**184100631**		12113203	**184120411**	
F15 Lc-Tds Restyling Euro 1	50	2001	2001	4400000	12114203	**184100631**		12113203	**184120411**	
Yesterday - Yesterday Euro	50	1997	2000	45	12113303	**184100361**		12113203	**184120411**	
Ciak	100	1999	2000	510000	12114203	**184100631**		12113203	**184120411**	
F12 Phantom	100	1999	2000	500000	12114203	**184100631**		12113203	**184120411**	
Blog	125	2009	2010	890020	12121103	**184100641**		12121003	**184120771**	
Blog	125	2011	2011	8904518	12121103	**184100641**		12121003	**184120771**	
Centro Ie	125	2008	2009	840102	12119803	**184100661**		12119703	**184120781**	
Centro SI	125	2009	2010	840102	12121103	**184100641**		12121003	**184120771**	
Centro SI	125	2011	2011	84009207	12121103	**184100641**		12121003	**184120771**	
Ciak	125	2000	2001	590000	12113303	**184100361**		12113203	**184120411**	
Ciak Master	125	2004	2004	590000	12113303	**184100361**		12113203	**184120411**	
Ciak Master Euro 3	125	2006	2006	ZJM780201	12113303	**184100361**		12113203	**184120411**	
Ciak Restyling Euro2	125	2003	2003	590000	12113303	**184100361**		12113203	**184120411**	
F18 Warrior	125	2000	2002	57000001	12114203	**184100631**		12113203	**184120411**	
Madison	125	1999	2001	530000	12114303	**184120591**		12114303	**184120591**	
Madison 3	125	2006	2009	810102	12114303	**184120591**		12114303	**184120591**	
Madison R Restyling	125	2002	2002	530000	12114303	**184120591**		12114303	**184120591**	
Madison R Restyling Euro2	125	2003	2004	690102	12114303	**184120591**		12114303	**184120591**	
Phantom Max	125	2003	2003	660000	12114303	**184120591**		12114303	**184120591**	
Ciak	150	2000	2002	600000	12113303	**184100361**		12113203	**184120411**	
Ciak Master	150	2004	2004	600000	12113303	**184100361**		12113203	**184120411**	
Ciak Restyling Euro2	150	2003	2003	600000	12113303	**184100361**		12113203	**184120411**	
F18 Warrior	150	2000	2002	58000001	12114203	**184100631**		12113203	**184120411**	
Madison T	150	1999	2001	550000	12114303	**184120591**		12114303	**184120591**	
Blog	160	2009	2010	900020	12121103	**184100641**		12121003	**184120771**	
Blog	160	2011	2011	90004358	12121103	**184100641**		12121003	**184120771**	
Centro Ie	160	2008	2009	850102	12119803	**184100661**		12119703	**184120781**	
Centro SI	160	2009	2010	850102	12121103	**184100641**		12121003	**184120771**	
Centro SI	160	2011	2011	85011583	12121103	**184100641**		12121003	**184120771**	



LEVE

LEVERS

Modello *Model*	**CC**	**Da** *From*	**A** *To*	**Telaio** *Frame*	**OEM Leva sx** *Left Lever OEM Number*	**Leva sinistra** *Left Lever*	**Note leva sinistra** *Left Lever Notes*	**OEM Leva dx** *Right Lever OEM Number*	**Leva destra** *Right Lever*	**Note leva destra** *Right Lever Notes*
Madison R	180	2001	2002	630000	12114303	**184120591**		12114303	**184120591**	
Ciak Master Euro 2	200	2006	2006	790201	12113303	**184100361**		12113203	**184120411**	
Madison S Restyling	200	2002	2002	650000	12114303	**184120591**		12114303	**184120591**	
Madison S Restyling Euro2	200	2003	2003	650000	12114303	**184120591**		12114303	**184120591**	
Phantom Max	200	2003	2003	670000	12114303	**184120591**		12114303	**184120591**	
Madison 3	250	2006	2009	800102	12114303	**184120591**		12114303	**184120591**	
Madison Rs Restyling	250	2004	2004	650000	12114303	**184120591**		12114303	**184120591**	
Madison S	250	1999	2001	540000	12114303	**184120591**		12114303	**184120591**	
Password	250	2005	2006	760102	12118103	**184120591**		12114303	**184120591**	
Password Eu3	250	2007	2008	7601A2	12118103	**184120591**		12114303	**184120591**	
Phantom Max	250	2004	2004	67004110	12114303	**184120591**		12114303	**184120591**	
Madison K	400	2002	2002	610000	12114303	**184120591**		12114303	**184120591**	
Madison K Restyling	400	2002	2004	610000	12114303	**184120591**		12114303	**184120591**	
Spidermax Gt	500	2004	2005	7101A271	12114303	**184120591**		12114303	**184120591**	
Spidermax Gt Euro3	500	2006	2006	7101B271	12114303	**184120591**		12114303	**184120591**	
Spidermax Rs	500	2008	2008	8600	12114303	**184120591**		12114303	**184120591**	
MBK										
Cs Mach G Euro1	50	2002	2003	5RW	5JHH39120000	**184100401**		5RWH39220000	**184120891**	
Cs Mach G Euro2	50	2002	2004	5RW	5JHH39120000	**184100401**		5RWH39220000	**184120891**	
Ct S Sorriso	50	1991	1992	3NT7	1NTH39120000	**184100131**		-	-	
Ct Ss Sorriso	50	1993	1995	3NTD	1NTH39120000	**184100131**		-	-	
Cw Booster	50	1990	1991	3WW	3VLH39120000	**184100010**		3VLH39220000	**184120010**	
Cw Booster	50	2001	2002	5NT	5JHH39120000	**184100401**		5NTH39220000	**184120821**	
Cw Booster	50	2004	2004	5WW2	5JHH39120000	**184100401**		5JHH39220000	**184120481**	
Cw Booster (Ita)	50	1992	1994	3WW	3VLH39120000	**184100010**		3VLH39220000	**184120010**	
Cw Booster Naked	50	2003	2003	1D12	5JHH39120000	**184100401**		5NTH39220000	**184120821**	
Cw Booster Spirit	50	1996	1998	4VU	4KHH39120000	**184100151**		2NA839220100	**184120151**	
Cw Booster Spirit (Ita)	50	1999	1999	4VU9	4SBH39121000	**184100421**		4VVH39221000	**184120471**	
Cw Booster Spirit (Ita)	50	2000	2000	5LE\5MM	4SBH39120000	**184100161**	Grigia	-	-	
Cw Booster Spirit (Ita)	50	2000	2000	5LE\5MM	4SBH39121000	**184100421**	Nera	4VVH39221000	**184120471**	
Cw Booster Spirit Euro2	50	2002	2002	5RH2	5JHH39120000	**184100401**		5NTH39220000	**184120821**	
Cw Booster Spirit Euro2	50	2003	2003	5XW\5XX	5JHH39120000	**184100401**		5NTH39220000	**184120821**	
Cw L Booster	50	2001	2003	5SX	5JHH39120000	**184100401**		5NTH39220000	**184120821**	
Cw L Booster Spirit	50	2003	2003	5XY2\5YA2	5JHH39120000	**184100401**		5NTH39220000	**184120821**	
Cw R Booster Road (Ita)	50	1994	1995	4PA1	4KHH39120000	**184100151**		2NA839220100	**184120151**	
Cw Rs Booster Ng	50	2001	2002	5NU	5JHH39120000	**184100401**		5JHH39220000	**184120481**	
Cw Rs Booster Ng	50	2003	2003	1B02	5JHH39120000	**184100401**		5JHH39220000	**184120481**	
Cw Rs Booster Ng (Ita)	50	1995	1998	4SB	4SBH39120000	**184100161**		4SBH39220000	**184120171**	
Cw Rs Booster Ng (Ita)	50	1999	1999	5FX2	4SBH39121000	**184100421**		4SBH39221000	**184120511**	
Cw Rs Booster Ng Euro1	50	1999	2000	5LF	4SBH39121000	**184100421**		4SBH39221000	**184120511**	
Cw Rsp Booster Rocket (Ita)	50	1997	1998	4UP	4SBH39120000	**184100161**		4TDH39220000	**184120181**	
Cw Rsx Booster Track (Ita)	50	1996	1998	4YB	4SBH39120000	**184100161**		4SBH39220000	**184120171**	
Cw Sp Booster Spirit Euro2	50	2002	2002	5RY2	5JHH39120000	**184100401**		5NTH39220000	**184120821**	
Ew Stunt	50	2000	2002	5LH	5JHH39120000	**184100401**		5JHH39220000	**184120481**	
Ya Ta New Sorriso	50	1995	1996	4SD1	1NTH39120000	**184100131**		-	-	
Ye Evolis (Ita)	50	1992	1994	4EF	3VLH39120000	**184100010**		2NA839220100	**184120151**	
Ye Evolis (Ita)	50	1995	1995	4EF	4KHH39120000	**184100151**		2NA839220100	**184120151**	
Yh Flipper	50	1998	1998	5EU	5EUH39120000	**184100411**		5EUH39220000	**184120491**	



Modello *Model*	CC	Da *From*	A *To*	Telaio *Frame*	OEM Leva sx *Left Lever OEM Number*	Leva sinistra *Left Lever*	Note leva sinistra *Left Lever Notes*	OEM Leva dx *Right Lever OEM Number*	Leva destra *Right Lever*	Note leva destra *Right Lever Notes*
Yh Flipper	50	2001	2002	5PF	5EUH39120000	**184100411**		5EUH39220000	**184120491**	
Yh Flipper Catalitico	50	1999	2000	5LD	5EUH39120000	**184100411**		5EUH39220000	**184120491**	
Yh Flipper Euro2	50	2003	2004	5UB	5EUH39120000	**184100411**		5EUH39220000	**184120491**	
Ym Fizz (Ita)	50	1994	1995	4KH	4KHH39120000	**184100151**		2NA839220100	**184120151**	
Yn R Ovetto (Che-Ita)	50	1997	2001	5AD\5MR	5ADH39120200	**184100141**		5ADH39220100	**184120401**	
Yn R Ovetto Euro1	50	2002	2004	5RN	5ADH39120200	**184100141**		5ADH39220100	**184120401**	
Yn R Ovetto Euro2	50	2002	2003	5RN	5ADH39120200	**184100141**		5ADH39220100	**184120401**	
Yq L Nitro Jaguar	50	2004	2004	5SB9	5BRH39120100	**184120391**		5BRH39120100	**184120391**	
Yq Nitro	50	2001	2002	5PE	5BRH39120100	**184120391**		5BRH39120100	**184120391**	
Yq Nitro	50	2004	2004	5SB	5BRH39120100	**184120391**		5BRH39120100	**184120391**	
Yq Nitro (Ita)	50	1997	1998	5BR	5BRH39120100	**184120391**		5BRH39120100	**184120391**	
Yq Nitro (Ita)	50	1999	2000	5LC	5BRH39120100	**184120391**		5BRH39120100	**184120391**	
Yq Nitro Euro2	50	2003	2003	5SB	5BRH39120100	**184120391**		5BRH39120100	**184120391**	
Yn Ovetto	100	2000	2002	5KK	5ADH39120200	**184100141**		5ADH39220100	**184120401**	
Yw Booster	100	1999	2001	4VP	4VPH39121000	**184100801**		-	**-**	
Xn Doodo	125	2000	2001	5MF2	5DSH39120100	**184100491**		5DSH39220100	**184120601**	
Xq Thunder	125	2001	2002	5HT	5DSH39220100	**184120601**		5DSH39220100	**184120601**	
Yp E Skyliner	125	2003	2003	5XL2	5DSH39220100	**184120601**		5DSH39220100	**184120601**	
Yp Skyliner	125	1998	2000	5DS	5DSH39120100	**184100491**		5DSH39220100	**184120601**	
Xn Doodo	150	2001	2002	5PR	5DSH39120100	**184100491**		5DSH39220100	**184120601**	
Xq Thunder	150	2001	2002	5LG	5DSH39220100	**184120601**		5DSH39220100	**184120601**	
Yp Skyliner	150	2000	2000	5NP2	5DSH39120100	**184100491**		5DSH39220100	**184120601**	
Yp Skyliner	150	2001	2002	5NS	5DSH39220100	**184120601**		5DSH39220100	**184120601**	
Yp Skyliner	250	2000	2001	5GM	5CG839121100	**184100501**		5CG839220100	**184120611**	
Yp Skyliner	250	2002	2003	5SJ	5CG839121100	**184100501**		5CG839220100	**184120611**	
Yp Skyliner Abs	250	2003	2003	5SJ7	5CG839121100	**184100501**		5CG839220100	**184120611**	
Xc Kilibre	300	2003	2003	5SE2	5DSH39220100	**184120601**		5DSH39220100	**184120601**	
MOTO GUZZI										
Breva	850	2006	2007	LPB00	981046	**184102300**		981050	**184122340**	
Griso	850	2006	2007	LSB00	981046	**184102300**		981050	**184122340**	
Norge	850	2007	2007	LP000	981046	**184102300**		981050	**184122340**	
Bellagio - Aquila Nera	940	2007	2013	LY000\LYA00	981046	**184102300**		981050	**184122340**	
Mgs-01 Corsa	1000	2004	2007	LR	AP8133667	**184102280**		AP8133664	**184122280**	
Breva	1100	2005	2007	LPC00	981046	**184102300**		981050	**184122340**	
Griso	1100	2005	2008	LS000\LSC	981046	**184102300**		981050	**184122340**	
Breva	1200	2007	2007	LPG00\LPG01	981046	**184102300**		981050	**184122340**	
Griso 8V - 8V Special Edition	1200	2007	2013	LSE00\LSE03	981046	**184102300**		981050	**184122340**	
Griso Se 8V	1200	2015	2016	LSG01	981046	**184102300**		981050	**184122340**	
Norge	1200	2006	2008	LPH011\LPL\LPU0	981046	**184102300**		981050	**184122340**	
Norge 8V Polizia Stradale	1200	2014	2014	LPS03	981046	**184102300**		981050	**184122340**	
Norge Gt 8V - Polizia	1200	2010	2016	LPS01\LPT00	981046	**184102300**		981050	**184122340**	
Sport	1200	2006	2007	LPM00\LPM01	981046	**184102300**		981050	**184122340**	
Sport 8V	1200	2008	2013	LPJ20\LPR00\LPR01	981046	**184102300**		981050	**184122340**	
Stelvio	1200	2008	2008	LZ000	981046	**184102300**		981050	**184122340**	
Stelvio 8V Std - Ntx	1200	2011	2017	LZE00\LZG00	981046	**184102300**		981050	**184122340**	
Stelvio Std - Ntx	1200	2009	2010	LZA\LZB	981046	**184102300**		981050	**184122340**	
MOTO MORINI										
9 1/2	1200	2007	2008	ZLM020101	M13200008400	**184102300**		-	**-**	
Corsaro	1200	2007	2007	ZLM0101	M13200008400	**184102300**		-	**-**	
Corsaro Carbon	1200	2007	2007	ZLM0101	M13200008400	**184102300**		-	**-**	
Corsaro Veloce	1200	2007	2008	ZLM0101	M13200008400	**184102300**		-	**-**	
Granpasso	1200	2008	2009	ZLM030101	R2131041	**184102280**		R2140031	**184122280**	
Scrambler	1200	2009	2009	ZLM020401	M13200008400	**184102300**		-	**-**	



LEVE

LEVERS

Modello *Model*	CC	Da *From*	A *To*	Telaio *Frame*	OEM Leva sx *Left Lever OEM Number*	Leva sinistra *Left Lever*	Note leva sinistra *Left Lever Notes*	OEM Leva dx *Right Lever OEM Number*	Leva destra *Right Lever*	Note leva destra *Right Lever Notes*
PEUGEOT										
Buxy 50	50	1995	1997	VGA 427	-	**184100021**		-	**-**	
Buxy 50 Rs	50	1996	1997	VGA 427	-	**184100021**		-	**-**	
Elyseo 50 45 Km/h	50	2002	2003	VGA G1AAE	-	**-**		752868	**184120671**	Ajp
Elyseo 50 45 Km/h	50	2002	2003	VGA G1AAE	-	**-**		752864	**184120701**	Heng Tong
Elyseo 50 50 Km/h	50	1998	2001	VGA G1AAK	-	**-**		752868	**184120671**	Ajp
Elyseo 50 50 Km/h	50	1998	2001	VGA G1AAK	-	**-**		752864	**184120701**	Heng Tong
Jet Force 50 C-Tech	50	2005	2006	VGA A1AAAA	752868	**184120671**		-	**-**	Ajp
Jet Force 50 C-Tech	50	2007	2012	VGA A1AABA	752868	**184120671**		-	**-**	Ajp
Jet Force 50 C-Tech Rally Victories	50	2006	2007	VGA A1AAAA	752868	**184120671**		-	**-**	Ajp
Jet Force 50 C-Tech Rcup	50	2007	2009	VGA A1AABA	752868	**184120671**		-	**-**	Ajp
Jet Force 50 Darkside	50	2008	2015	VGA A1AABA	752868	**184120671**		-	**-**	Ajp
Jet Force 50 Ice Blade	50	2010	2012	VGA A1AABA	752868	**184120671**		-	**-**	Ajp
Jet Force 50 Tsdi	50	2003	2007	VGA A1AAJA	752868	**184120671**		752868	**184120671**	Ajp
Jet Force 50 Tsdi Sbc	50	2003	2006	VGA A1AAJB	752868	**184120671**		752868	**184120671**	Ajp
Looxor 50	50	2002	2004	VGA B1AAAA	-	**184100021**		752868	**184120671**	Ajp
Looxor 50	50	2005	2006	VGA B1AABA	-	**184100021**		752868	**184120671**	Ajp
Looxor 50 Tsdi	50	2002	2003	VGA B1AAJA	-	**184100021**		752868	**184120671**	Ajp
Looxor 50 Tsdi	50	2004	2006	VGA B1AA1A	-	**184100021**		752868	**184120671**	Ajp
Ludix 50 Classic 1 Seater	50	2004	2007	VGA L1AABM/EM	752868	**184120671**		752868	**184120671**	Ajp
Ludix 50 Classic 2 Seater	50	2006	2007	VGA L1AAEA	752868	**184120671**		752868	**184120671**	Ajp
Ludix 50 Elegance	50	2004	2007	VGA L1AABA/EA	-	**184100021**		752868	**184120671**	Ajp
Ludix 50 Ep	50	2008	2014	-	-	**184100021**		752868	**184120671**	Ajp
Ludix 50 Ii Dt One Luxe 2 Sitzer	50	2008	2011	VGA L1AADA	-	**-**		752868	**184120671**	Ajp
Ludix 50 Ii Elegance	50	2008	2011	VGA L1AAEA	-	**184100021**		752868	**184120671**	Ajp
Ludix 50 Ii Lc Blaster Ice Blade	50	2010	2011	VGA L1ACFA	-	**-**		752868	**184120671**	Ajp
Ludix 50 Ii Lc Blaster Rcup	50	2008	2009	VGA L1ACFA	-	**-**		752868	**184120671**	Ajp
Ludix 50 Ii Lc Blaster Rs12	50	2008	2011	VGA L1ACFA	-	**-**		752868	**184120671**	Ajp
Ludix 50 Ii Snake Furious	50	2008	2011	VGA L1AAFA	-	**-**		752868	**184120671**	Ajp
Ludix 50 Ii Trend 12 Inch	50	2008	2011	VGA L1AAFA	-	**184100021**		752868	**184120671**	Ajp
Ludix 50 Lc Blaster 10 Zoll	50	2005	2007	VGA L1ACCA	-	**184100021**		752868	**184120671**	Ajp
Ludix 50 Lc Rs Blaster 12 Zoll	50	2007	2007	-	-	**-**		752868	**184120671**	Ajp
Ludix 50 One 1 Sitzer	50	2004	2007	VGA L1AAAM/DM	752868	**184120671**		752868	**184120671**	Ajp
Ludix 50 One 2 Sitzer	50	2006	2007	VGA L1AADA	752868	**184120671**		752868	**184120671**	Ajp
Ludix 50 Pro 2T	50	2008	2014	-	-	**184100021**		752868	**184120671**	Ajp
Ludix 50 Pro 4T	50	2014	2015	-	-	**184100021**		752868	**184120671**	Ajp
Ludix 50 Snake	50	2004	2007	VGA L1AAACA/FA	-	**184100021**		752868	**184120671**	Ajp
Ludix 50 Trend 10 Inch	50	2004	2007	VGA L1AAAAA	-	**184100021**		752868	**184120671**	Ajp
Rapido 50 St	50	1985	1993	-	-	**184122460**		-	**184122460**	
Speedake 50	50	1995	1997	VGA 427	-	**184100021**		-	**-**	
Speedfight 1 50 Ac Dt	50	1997	1998	VGA S1B00A	-	**184100021**		752868	**184120671**	Ajp
Speedfight 1 50 Ac Dt	50	1997	1998	VGA S1B00A	-	**184100021**		752864	**184120701**	Heng Tong
Speedfight 1 50 Ac Dt	50	1999	2000	VGA S1B0KA	-	**184100021**		752868	**184120671**	Ajp



Modello *Model*	CC	Da *From*	A *To*	Telaio *Frame*	OEM Leva sx *Left Lever OEM Number*	Leva sinistra *Left Lever*	Note leva sinistra *Left Lever Notes*	OEM Leva dx *Right Lever OEM Number*	Leva destra *Right Lever*	Note leva destra *Right Lever Notes*
Speedfight 1 50 Ac Dt	50	1999	2000	VGA S1B0KA	-	**184100021**		752864	**184120701**	Heng Tong
Speedfight 1 50 Lc Dd	50	1999	1999	VGA S1B0KB	752868	**184120671**		752864	**184120701**	Heng Tong
Speedfight 1 50 Lc Dd	50	1999	2000	VGA S1B0KB	752868	**184120671**		752868	**184120671**	Ajp
Speedfight 1 50 Lc Dt	50	1997	1998	VGA S1B00B	752868	**184120671**		752864	**184120701**	Heng Tong
Speedfight 1 50 Lc Dt	50	1997	1998	VGA S1B00B	-	**-**		752868	**184120671**	Ajp
Speedfight 2 50 Ac Dt	50	2001	2004	VGA S1B0KA	-	**184100021**		752868	**184120671**	Ajp
Speedfight 2 50 Ac Dt	50	2001	2004	VGA S1B0KA	-	**184100021**		752864	**184120701**	Heng Tong
Speedfight 2 50 Ac Dt	50	2005	2009	VGA S1BADA/GA	-	**184100021**		752868	**184120671**	Ajp
Speedfight 2 50 Ac Dt	50	2005	2009	VGA S1BADA/GA	-	**184100021**		752864	**184120701**	Heng Tong
Speedfight 2 50 Ac Dt Rally Victories	50	2006	2007	VGA S1BADA/GA	-	**184100021**		752868	**184120671**	Ajp
Speedfight 2 50 Ac Dt Rally Victories	50	2006	2007	VGA S1BADA/GA	-	**184100021**		752864	**184120701**	Heng Tong
Speedfight 2 50 Ac Dt Silver Sport	50	2005	2007	VGA S1BADA/GA	-	**184100021**		752868	**184120671**	Ajp
Speedfight 2 50 Ac Dt Silver Sport	50	2005	2007	VGA S1BADA/GA	-	**184100021**		752864	**184120701**	Heng Tong
Speedfight 2 50 Ac Dt Wrc 307	50	2005	2005	VGA S1BADA/GA	-	**184100021**		752868	**184120671**	Ajp
Speedfight 2 50 Ac Dt Wrc 307	50	2005	2005	VGA S1BADA/GA	-	**184100021**		752864	**184120701**	Heng Tong
Speedfight 2 50 Lc Dd	50	2003	2004	VGA S1BBAA	752868	**184120671**		752868	**184120671**	Ajp
Speedfight 2 50 Lc Dd	50	2003	2004	VGA S1BBAA	752868	**184120671**		752864	**184120701**	Heng Tong
Speedfight 2 50 Lc Dd	50	2005	2009	VGA S1BBBA/BBCA	752868	**184120671**		752868	**184120671**	Ajp
Speedfight 2 50 Lc Dd	50	2005	2009	VGA S1BBBA/BBCA	752868	**184120671**		752864	**184120701**	Heng Tong
Speedfight 2 Lc Silversport	50	2005	2006	-	-	**-**		757025	**184120691**	Ajp
Squab 50	50	1996	1997	VGA S1A03	-	**184100021**		752868	**184120671**	Ajp
Squab 50	50	1996	1997	VGA S1A03	-	**184100021**		752864	**184120701**	Heng Tong
Sv 50 Dt M	50	1997	1998	VGA 395	-	**184100021**		-	**-**	
Sv 50 Tt	50	1993	1997	VGA 395	-	**184100021**		-	**-**	
Sv 50 Tt Junior Telegabel	50	1993	1996	VGA 395	-	**184100021**		-	**-**	
Tkr 50 Metal-X	50	2002	2002	-	-	**-**		757025	**184120691**	Ajp
Tkr 50 Streetboard	50	2001	2001	VGA S1A0KB	-	**184100021**		752868	**184120671**	Ajp
Tkr 50 Streetboard	50	2001	2001	VGA S1A0KB	-	**184100021**		752864	**184120701**	Heng Tong
Tkr 50 Streetzone	50	2003	2003	VGA S1AAAA	-	**-**		752868	**184120671**	Ajp
Tkr2 50 Wrc	50	2004	2006	-	-	**-**		757025	**184120691**	Ajp
Trekker 50 Off Road	50	1998	2000	VGA S1A0KB	-	**184100021**		752868	**184120671**	Ajp
Trekker 50 Off Road	50	1998	2000	VGA S1A0KB	-	**184100021**		752864	**184120701**	Heng Tong
Trekker 50 Road	50	1998	2000	VGA S1A0KB	-	**184100021**		752868	**184120671**	Ajp
Trekker 50 Road	50	1998	2000	VGA S1A0KB	-	**184100021**		752864	**184120701**	Heng Tong
Trekker 50 Streetboard	50	1999	2000	VGA S1A0KB	-	**184100021**		752868	**184120671**	Ajp
Trekker 50 Streetboard	50	1999	2000	VGA S1A0KB	-	**184100021**		752864	**184120701**	Heng Tong
Tweet 50	50	2010	2012	-	802223	**184101130**		-	**-**	
Tweet 50	50	2018	2019	-	802223	**184101130**		-	**-**	
Tweet 50 Active	50	2018	2018	-	802223	**184101130**		-	**-**	
Tweet 50 Allure	50	2018	2018	-	802223	**184101130**		-	**-**	
Tweet 50 Double Black	50	2016	2017	-	802223	**184101130**		-	**-**	



LEVE

LEVERS

Modello *Model*	**CC**	**Da** *From*	**A** *To*	**Telaio** *Frame*	**OEM Leva sx** *Left Lever OEM Number*	**Leva sinistra** *Left Lever*	**Note leva sinistra** *Left Lever Notes*	**OEM Leva dx** *Right Lever OEM Number*	**Leva destra** *Right Lever*	**Note leva destra** *Right Lever Notes*
Tweet 50 Evo	50	2013	2017	-	802223	**184101130**		-	-	
Tweet 50 Evo	50	2019	2019	-	802223	**184101130**		-	-	
Tweet 50 Paris	50	2016	2017	-	802223	**184101130**		-	-	
Tweet 50 Pro	50	2017	2017	-	802223	**184101130**		-	-	
Tweet 50 Rs	50	2011	2018	-	802223	**184101130**		-	-	
V-Clic 50 4T	50	2007	2014	LAEAGZ40	-	-		-	**184122410**	
V-Clic 50 4T Silver Sport	50	2008	2008	LAEAGZ40	-	-		-	**184122410**	
Vivacity 50	50	1999	2001	VGA S1C0KA	-	**184100021**		752868	**184120671**	Ajp
Vivacity 50	50	1999	2001	VGA S1C0KA	-	**184100021**		752864	**184120701**	Heng Tong
Vivacity 50	50	2002	2002	VGA S1C0KF	-	**184100021**		752868	**184120671**	Ajp
Vivacity 50	50	2002	2002	VGA S1C0KF	-	**184100021**		752864	**184120701**	Heng Tong
Vivacity 50 2 Blueline	50	2005	2005	-	-	-		752868	**184120671**	Ajp
Vivacity 50 2 Blueline	50	2005	2005	-	-	-		752864	**184120701**	Heng Tong
Vivacity 50 2 Rs	50	2008	2008	-	-	-		752868	**184120671**	Ajp
Vivacity 50 3 2T New Sportline	50	2011	2012	-	-	-		752868	**184120671**	Ajp
Vivacity 50 Blueline	50	2004	2004	-	-	-		752868	**184120671**	Ajp
Vivacity 50 Blueline	50	2004	2004	-	-	-		752864	**184120701**	Heng Tong
Vivacity 50 Compact	50	2003	2004	VGA S1C0EA	-	**184100021**		752868	**184120671**	Ajp
Zenith 50 Lm	50	1996	1997	VGA 441	-	**184100021**		752868	**184120671**	Ajp
Zenith 50 Ln	50	1998	1998	VGA 441	-	**184100021**		752868	**184120671**	Ajp
Zenith 50 M	50	1997	1997	VGA 441	-	**184100021**		-	-	
Zenith 50 N	50	1998	1998	VGA 441	-	**184100021**		-	-	
Sv 80	80	1993	1995	VGA 403	-	**184100021**		-	-	
Sv 80 L	80	1996	1996	VGA 403	-	**184100021**		-	-	
Elyseo 100	100	1998	2000	VGA G2AA	-	-		752868	**184120671**	Ajp
Elyseo 100	100	2001	2001	VGA G2AAK	-	-		752868	**184120671**	Ajp
Looxor	100	2001	2001	-	-	-		757025	**184120691**	Ajp
Speedfight 1 100	100	1998	2000	VGA S2AB	752868	**184120671**		752868	**184120671**	Ajp
Speedfight 2 100	100	2001	2002	VGA S2AB	752868	**184120671**		752868	**184120671**	Ajp
Speedfight 2 100	100	2001	2002	VGA S2AB	752868	**184120671**		752864	**184120701**	Heng Tong
Speedfight 2 100	100	2003	2004	VGA S2ABK	752868	**184120671**		752868	**184120671**	Ajp
Speedfight 2 100	100	2003	2004	VGA S2ABK	752868	**184120671**		752864	**184120701**	Heng Tong
Speedfight 2 100	100	2005	2007	VGA S2ABL	752868	**184120671**		752868	**184120671**	Ajp
Speedfight 2 100	100	2005	2007	VGA S2ABL	752868	**184120671**		752864	**184120701**	Heng Tong
Speedfight 2 100 Wrc 206	100	2004	2004	VGA S2ABK	752868	**184120671**		752868	**184120671**	Ajp
Speedfight 2 100 Wrc 206	100	2004	2004	VGA S2ABK	752868	**184120671**		752864	**184120701**	Heng Tong
Speedfight 2 100 Wrc 307	100	2005	2005	VGA S2ABL	752868	**184120671**		752868	**184120671**	Ajp
Speedfight 2 100 Wrc 307	100	2005	2005	VGA S2ABL	752868	**184120671**		752864	**184120701**	Heng Tong
Sv 100	100	1998	1998	VGA F121	-	-		752864	**184120701**	Heng Tong
Trekker 100 Road	100	1998	2000	VGA S2AA	-	**184100021**		752868	**184120671**	Ajp
Trekker 100 Road	100	1998	2000	VGA S2AA	-	**184100021**		752864	**184120701**	Heng Tong
Vivacity 100	100	1999	2002	VGA S2AC	-	**184100021**		752868	**184120671**	Ajp
Vivacity 100	100	1999	2002	VGA S2AC	-	**184100021**		752864	**184120701**	Heng Tong
Vivacity 100	100	2003	2004	VGA S2ACK	-	**184100021**		752868	**184120671**	Ajp
Vivacity 100	100	2003	2004	VGA S2ACK	-	**184100021**		752864	**184120701**	Heng Tong
Vivacity 100	100	2005	2007	VGA S2ACL	-	-		752868	**184120671**	Ajp
Vivacity 100	100	2005	2007	VGA S2ACL	-	-		752864	**184120701**	Heng Tong
Elyseo 125 Dt	125	1998	2000	VGA G2AB	-	-		752868	**184120671**	Ajp
Elyseo 125 Dt Advantage	125	2004	2004	VGA G2AB	-	-		752868	**184120671**	Ajp
Sv 125	125	1993	1995	VGA 421	-	**184100021**		-	-	
Sv 125 L	125	1996	1997	VGA 421	-	**184100021**		-	-	



Modello *Model*	CC	Da *From*	A *To*	Telaio *Frame*	OEM Leva sx *Left Lever OEM Number*	Leva sinistra *Left Lever*	Note leva sinistra *Left Lever Notes*	OEM Leva dx *Right Lever OEM Number*	Leva destra *Right Lever*	Note leva destra *Right Lever Notes*
Tweet 125	125	2011	2014	-	802223	**184101130**		-	-	
Tweet 125 Abs	125	2018	2019	-	802223	**184101130**		-	-	
Tweet 125 Active Sbc	125	2018	2018	-	802223	**184101130**		-	-	
Tweet 125 Allure	125	2016	2016	-	802223	**184101130**		-	-	
Tweet 125 Allure Sbc	125	2018	2018	-	802223	**184101130**		-	-	
Tweet 125 Double Black	125	2016	2016	-	802223	**184101130**		-	-	
Tweet 125 Evo	125	2015	2016	-	802223	**184101130**		-	-	
Tweet 125 Ie Double Black Sbc	125	2017	2017	-	802223	**184101130**		-	-	
Tweet 125 Ie Paris Sbc	125	2017	2017	-	802223	**184101130**		-	-	
Tweet 125 Paris	125	2016	2017	-	802223	**184101130**		-	-	
Tweet 125 Pro	125	2014	2016	-	802223	**184101130**		-	-	
Tweet 125 Pro Sbc	125	2017	2017	-	802223	**184101130**		-	-	
Tweet 125 Rs	125	2011	2016	VGA LW2AAA	802223	**184101130**		-	-	
Tweet 125 Rs Sbc	125	2017	2018	-	802223	**184101130**		-	-	
Tweet 125 Sbc	125	2017	2019	-	802223	**184101130**		-	-	
Tweet 150	150	2011	2011	VGA LW2BAV	802223	**184101130**		-	-	
Tweet 150	150	2016	2016	-	802223	**184101130**		-	-	
Tweet 150 Abs	150	2017	2019	-	802223	**184101130**		-	-	
Tweet 150 Active Abs	150	2018	2018	-	802223	**184101130**		-	-	
Tweet 150 Allure Abs	150	2018	2018	-	802223	**184101130**		-	-	
Tweet 150 Double Black	150	2016	2017	-	802223	**184101130**		-	-	
Tweet 150 Evo	150	2013	2015	-	802223	**184101130**		-	-	
Tweet 150 Paris	150	2016	2017	-	802223	**184101130**		-	-	
Tweet 150 Rs	150	2014	2016	-	802223	**184101130**		-	-	
Tweet 150 Rs Abs	150	2017	2018	-	802223	**184101130**		-	-	
PIAGGIO										
Boss	50	1988	1989	CBS1T	228967	**184100310**		228966	**184121080**	
Ciao	50	1980	1988	C7E2T\C7V4T	228967	**184100310**		228966	**184121080**	
Ciao Px	50	-	-	-	178582	**184101100**		177340	**184121070**	
Ciao Sc	50	-	-	-	156378	**184101060**		156378	**184101060**	
Ciao Tre	50	1971	1999	CT31T	228967	**184100310**		228966	**184121080**	
Fly 2T	50	2005	2007	C44100	564683	**184100601**		646803	**184120731**	Grimeca
Fly 2T	50	2010	2011	C44700	564683	**184100601**		646803	**184120731**	Grimeca
Fly 4T	50	2005	2007	C44200	564683	**184100601**		646803	**184120731**	Grimeca
Fly 4T & 25-30 Km/h	50	2008	2011	C44500	564683	**184100601**		646803	**184120731**	Grimeca
Fly 4T Motore Chn	50	2006	2007	C44500	564683	**184100601**		646803	**184120731**	Grimeca
Free	50	1992	1994	FCS1T	269070	**184100170**		-	-	
Free Delivery	50	2000	2001	FCS2T	564689	**184100111**		564690	**184120091**	
Free FI	50	1995	2002	FCS2T	564689	**184100111**		564690	**184120091**	
Liberty	50	1997	2005	C1500	564642	**184100201**		494948	**184120261**	Grimeca
Liberty	50	1997	2005	C1500	564642	**184100201**		497039	**184120641**	Heng Tong
Liberty 2T	50	2006	2006	C42100	564683	**184100601**		497042	**184120711**	Heng Tong
Liberty 2T	50	2007	2008	C42500	564683	**184100601**		497042	**184120711**	Heng Tong
Liberty 2T Rst	50	2004	2004	C42100	564683	**184100601**		646803	**184120731**	Grimeca
Liberty 2T Sport	50	2006	2006	C42106	564683	**184100601**		646803	**184120731**	Grimeca
Liberty 2T Sport	50	2007	2008	C42501	564683	**184100601**		497042	**184120711**	Heng Tong
Liberty 4T	50	2000	2002	C2800	564642	**184100201**		494948	**184120261**	Grimeca
Liberty 4T	50	2000	2002	C2800	564642	**184100201**		497039	**184120641**	Heng Tong
Liberty 4T	50	2005	2008	C42400	564683	**184100601**		497042	**184120711**	Heng Tong
Liberty 4T Delivery - Single	50	2010	2014	C42401	648083	**184100731**		497042	**184120711**	Heng Tong
Liberty 4T Delivery Tnt	50	2009	2009	C42401	648083	**184100731**		497042	**184120711**	Heng Tong



LEVE

LEVERS

Modello *Model*	**CC**	**Da** *From*	**A** *To*	**Telaio** *Frame*	**OEM Leva sx** *Left Lever OEM Number*	**Leva sinistra** *Left Lever*	**Note leva sinistra** *Left Lever Notes*	**OEM Leva dx** *Right Lever OEM Number*	**Leva destra** *Right Lever*	**Note leva destra** *Right Lever Notes*
Liberty 4T Ptt - Double - Nexive	50	2009	2015	C42402\C42404	648083	**184100731**		497042	**184120711**	Heng Tong
Liberty 4T Ptt (Deu)	50	2007	2012	C42406	648083	**184100731**		497042	**184120711**	Heng Tong
Liberty 4T Ptt (Deu)	50	2007	2012	C42406	648083	**184100731**		646803	**184120731**	Grimeca
Liberty 4T Rst	50	2004	2004	C42200	564683	**184100601**		497042	**184120711**	Heng Tong
Liberty 4T Rst	50	2004	2004	C42200	564683	**184100601**		646803	**184120731**	Grimeca
Liberty 4T Sport	50	2006	2008	C42405	564683	**184100601**		497042	**184120711**	Heng Tong
Liberty Moc 2T & Elle	50	2009	2013	C49100	564683	**184100601**		497042	**184120711**	Heng Tong
Liberty Moc 4T & Elle	50	2009	2016	C49200	564683	**184100601**		497042	**184120711**	Heng Tong
Liberty Ptt Eu2	50	2004	2005	C37401	564642	**184100201**		497039	**184120641**	Heng Tong
Nrg	50	1994	1996	SAL1T	564689	**184100111**		564690	**184120091**	
Nrg Extreme	50	1999	2000	-	564682	**184100531**		-	**-**	
Nrg Mc3	50	2001	2004	C320\210	564682	**184100531**		497041	**184120651**	Heng Tong
Nrg Power Dd	50	2005	2005	C45100	646833	**184120711**	Heng Tong	646833	**184120711**	Heng Tong
Nrg Power Dd	50	2006	2015	C45100	497042	**184120711**	Heng Tong	497042	**184120711**	Heng Tong
Nrg Power Dd Serie Speciale	50	2007	2012	C45100	646833	**184120711**	Heng Tong	646833	**184120711**	Heng Tong
Nrg Power Dt	50	2006	2015	C45300	564683	**184100601**		497042	**184120711**	Heng Tong
Nrg Power Dt Serie Speciale	50	2007	2008	C45300	564683	**184100601**		646803	**184120731**	Grimeca
Nrg Power Purejet	50	2004	2006	C45200	497042	**184120711**	Heng Tong	497042	**184120711**	Heng Tong
Nrg Power Purejet	50	2007	2009	C45200	646833	**184120711**	Heng Tong	646833	**184120711**	Heng Tong
Nrg Power Purejet	50	2010	2011	C45200	497042	**184120711**	Heng Tong	497042	**184120711**	Heng Tong
Nrg Purejet	50	2002	2004	C320001	497042	**184120711**	Heng Tong	497042	**184120711**	Heng Tong
Nrg Purejet	50	2010	2010	C45200	646833	**184120711**	Heng Tong	646833	**184120711**	Heng Tong
Nrg Rst Mc2	50	1996	1998	C04000	-	**-**		271449	**184120101**	
Ntt	50	1995	1996	SAL1T	564689	**184100111**		564690	**184120091**	
Quartz	50	1992	1996	NSP1T	564689	**184100111**		494951	**184120231**	
Si FI2	50	1991	1997	SRM1T\SRV1T	268015	**184100300**		268014	**184120330**	
Typhoon	50	2001	2004	C29000	564689	**184100111**		564690	**184120091**	
Typhoon	50	2005	2008	C29000	564683	**184100601**		497042	**184120711**	Heng Tong
Typhoon	50	2009	2011	C48100	564683	**184100601**		497042	**184120711**	Heng Tong
Typhoon 2T Euro2	50	2010	2016	LBMC501	564681	**184100861**		646832	**184120651**	Heng Tong
Typhoon 2T Euro3 Ch	50	2011	2011	LBMC5	564681	**184100861**		646832	**184120651**	Heng Tong
Velofax	50	1996	1999	VTAC	269070	**184100170**		-	**-**	
Vespa	50	1963	1969	-	70578	**184100212**		70578	**184100212**	
Vespa Et2	50	1997	2005	C1600\38100	564642	**184100201**		494948	**184120261**	Grimeca
Vespa Et2	50	1997	2005	C1600\38100	564642	**184100201**		497039	**184120641**	Heng Tong
Vespa Et2 Iniezione	50	1997	2000	C1200	564642	**184100201**		494948	**184120261**	Grimeca
Vespa Et4	50	2000	2005	C26100	564642	**184100201**		494948	**184120261**	Grimeca
Vespa Et4	50	2000	2005	C26100	564642	**184100201**		497039	**184120641**	Heng Tong
Vespa FI	50	1990	1990	V5N1T	-	**184100261**	Cromata	-	**184120291**	Cromata
Vespa FI	50	1990	1990	V5N1T	265948	**184100961**	Nera	265947	**184120281**	Nera
Vespa FI	50	1990	1990	V5N1T	-	**184100971**	Grigia	-	**184120911**	Grigia
Vespa FI2 Automatica	50	1990	1991	V5P2T	-	**184100261**	Cromata	-	**184120291**	Cromata
Vespa FI2 Automatica	50	1990	1991	V5P2T	265948	**184100961**	Nera	265947	**184120281**	Nera
Vespa FI2 Automatica	50	1990	1991	V5P2T	-	**184100971**	Grigia	-	**184120911**	Grigia
Vespa FI2 Hp	50	1991	1997	V5N2T	-	**184100261**	Cromata	-	**184120291**	Cromata
Vespa FI2 Hp	50	1991	1997	V5N2T	265948	**184100961**	Nera	265947	**184120281**	Nera
Vespa FI2 Hp	50	1991	1997	V5N2T	-	**184100971**	Grigia	-	**184120911**	Grigia
Vespa Lx 2T	50	2005	2013	C38101	564683	**184100601**		497042	**184120711**	Heng Tong
Vespa Lx 2T Touring & 30Km	50	2010	2013	C38101	564683	**184100601**		497042	**184120711**	Heng Tong
Vespa Lx 4T	50	2005	2009	C38300	564683	**184100601**		646803	**184120731**	Grimeca
Vespa Lx 4T-4V	50	2009	2013	C38700	564683	**184100601**		497042	**184120711**	Heng Tong



Modello *Model*	CC	Da *From*	A *To*	Telaio *Frame*	OEM Leva sx *Left Lever OEM Number*	Leva sinistra *Left Lever*	Note leva sinistra *Left Lever Notes*	OEM Leva dx *Right Lever OEM Number*	Leva destra *Right Lever*	Note leva destra *Right Lever Notes*
Vespa Lx 4T-4V Touring	50	2010	2013	C38700	564683	**184100601**		497042	**184120711**	Heng Tong
Vespa Lxv 2T	50	2006	2009	C38102	648115	**184100821**		-	**-**	
Vespa Lxv 2T Navy	50	2008	2008	C38102	648115	**184100821**		-	**-**	
Vespa Primavera 2T	50	2013	2017	C53200	564683	**184100601**		497042	**184120711**	Heng Tong
Vespa Primavera 4T 2V 25 Km/h	50	2014	2016	C53300	564683	**184100601**		497042	**184120711**	Heng Tong
Vespa Primavera 4T-4V	50	2013	2016	C53100	564683	**184100601**		497042	**184120711**	Heng Tong
Vespa R	50	1970	1983	V5A1T	70578	**184100212**		70578	**184100212**	
Vespa S 2T & College	50	2007	2012	C38103	564683	**184100601**		497042	**184120711**	Heng Tong
Vespa S 4T-4V & College	50	2008	2012	M38600	564683	**184100601**		497042	**184120711**	Heng Tong
Vespa Special	50	1972	1972	V5B1T	147319	**184100881**		147319	**184100881**	
Vespa Special	50	1975	1983	V5B3T	165279	**184100211**		165279	**184100211**	
Vespa Special	50	1975	1983	V5B3T	165279	**184100431**		165279	**184100431**	
Vespa Special	50	1975	1983	V5B3T	165279	**184100431**		165279	**184100431**	
Vespa Sprint 2T 2V	50	2014	2016	C53201	564683	**184100601**		497042	**184120711**	Heng Tong
Vespa Sprint 4T 2V 25 Km/h	50	2014	2016	C53301	564683	**184100601**		497042	**184120711**	Heng Tong
Vespa Sprint 4T 4V	50	2014	2016	C53101	564683	**184100601**		497042	**184120711**	Heng Tong
Zip	50	1992	1993	SSL1T	269070	**184100170**		-	**-**	
Zip	50	1995	1996	SSP2T	269070	**184100170**		-	**-**	
Zip	50	2000	2004	C25000	564682	**184100531**		-	**-**	
Zip 2T	50	2008	2013	C25E0	564682	**184100531**		497041	**184120651**	Heng Tong
Zip 4T	50	2000	2005	C25000	564682	**184100531**		-	**-**	
Zip 4T	50	2006	2013	LBMC25C	564682	**184100531**		-	**-**	
Zip 4T 25Km/h	50	2006	2016	-	564682	**184100531**		497041	**184120651**	Heng Tong
Zip Bimodale	50	1994	1997	BMZ1T	269070	**184100170**		-	**-**	
Zip Fast Raider	50	1993	1994	SSP1T	564689	**184100111**		494951	**184120231**	
Zip Fast Raider Rst	50	1996	1997	C0700	564689	**184100111**		494951	**184120231**	
Zip Rst	50	1996	1999	C0600	564689	**184100111**		564690	**184120091**	
Zip Sp	50	1996	2000	C1100	564689	**184100111**		494951	**184120231**	
Zip Sp	50	2001	2004	C250004	564682	**184100531**		497041	**184120651**	Heng Tong
Zip Sp Euro2	50	2006	2013	C25000	564682	**184100531**		497041	**184120651**	Heng Tong
Fly 4T	100	2006	2014	M53100	564683	**184100601**		646803	**184120731**	Grimeca
Free	100	2002	2003	M2910	564689	**184100111**		564690	**184120091**	
Zip 4T	100	2006	2010	M25200	564682	**184100531**		497041	**184120651**	Heng Tong
Beverly	125	2001	2003	M2810\M2820	497031	**184120601**	Brembo	497031	**184120601**	Brembo
Beverly	125	2001	2003	M2810\M2820	600475	**184120661**	Heng Tong	600475	**184120661**	Heng Tong
Beverly Euro 3	125	2007	2008	M28900	646829	**184120601**	Brembo	646829	**184120601**	Brembo
Beverly Euro 3	125	2007	2008	M28900	600475	**184120661**	Heng Tong	600475	**184120661**	Heng Tong
Beverly Euro 3 Mic	125	2007	2007	M28900	646829	**184120601**	Brembo	646829	**184120601**	Brembo
Beverly Euro 3 Mic	125	2007	2007	M28900	600475	**184120661**	Heng Tong	600475	**184120661**	Heng Tong
Beverly Euro 3 Sport	125	2007	2008	M28900	600475	**184120661**	Heng Tong	646829	**184120601**	Brembo
Beverly Euro 3 Sport	125	2007	2008	M28900	600475	**184120661**	Heng Tong	600475	**184120661**	Heng Tong
Beverly Rst	125	2004	2007	M28400	646829	**184120601**	Brembo	646829	**184120601**	Brembo
Beverly Rst	125	2004	2007	M28400	600475	**184120661**	Heng Tong	600475	**184120661**	Heng Tong
Beverly Rst 4T 4V Ie Euro3	125	2010	2015	ZAMP69100	600475	**184120661**	Heng Tong	646829	**184120601**	Brembo
Beverly Rst 4T 4V Ie Euro3	125	2010	2015	ZAMP69100	600475	**184120661**	Heng Tong	600475	**184120661**	Heng Tong
Beverly Tourer Euro3	125	2007	2010	M28901	646829	**184120601**	Brembo	646829	**184120601**	Brembo
Beverly Tourer Euro3	125	2007	2010	M28901	600475	**184120661**	Heng Tong	600475	**184120661**	Heng Tong
Carnaby	125	2007	2010	M60200	646829	**184120601**	Brembo	646829	**184120601**	Brembo
Carnaby	125	2007	2010	M60200	600475	**184120661**	Heng Tong	600475	**184120661**	Heng Tong



LEVE

LEVERS

Modello *Model*	**CC**	**Da** *From*	**A** *To*	**Telaio** *Frame*	**OEM Leva sx** *Left Lever OEM Number*	**Leva sinistra** *Left Lever*	**Note leva sinistra** *Left Lever Notes*	**OEM Leva dx** *Right Lever OEM Number*	**Leva destra** *Right Lever*	**Note leva destra** *Right Lever Notes*
Fly	125	2005	2007	M42100	564683	**184100601**		646803	**184120731**	Grimeca
Fly Euro3	125	2007	2007	M57100	564683	**184100601**		646803	**184120731**	Grimeca
Fly Euro3	125	2008	2011	M57200	564683	**184100601**		646803	**184120731**	Grimeca
Hexagon Gtx	125	2000	2000	M2000000\M2000001	-	**-**		494952	**184120111**	Grimeca
Hexagon Lx4	125	1998	1999	M1500	564683	**184100601**		494952	**184120111**	Grimeca
Hexagon Lx-Lxt	125	1998	1999	M0500\M0600	564683	**184100601**		646803	**184120731**	Grimeca
Liberty	125	1998	2000	M1100	564642	**184100201**		494948	**184120261**	Grimeca
Liberty	125	2001	2002	M2200	564642	**184100201**		494948	**184120261**	Grimeca
Liberty	125	2001	2002	M2200	564642	**184100201**		497039	**184120641**	Heng Tong
Liberty 4T	125	2006	2007	M38100	564683	**184100601**		497042	**184120711**	Heng Tong
Liberty 4T 2V Euro3	125	2009	2012	M67100	564683	**184100601**		497042	**184120711**	Heng Tong
Liberty 4T 2V Ie Ptt - Ita	125	2012	2013	M38900	648083	**184100731**		497042	**184120711**	Heng Tong
Liberty 4T Euro3	125	2006	2008	M38600	564683	**184100601**		646803	**184120731**	Grimeca
Liberty 4T Euro3 Delivery - Single	125	2007	2015	M38602	648083	**184100731**		497042	**184120711**	Heng Tong
Liberty 4T Euro3 Delivery - Tnt - Nexive	125	2008	2015	P38602	648083	**184100731**		497042	**184120711**	Heng Tong
Liberty 4T Sport Euro3	125	2006	2008	M38601	564683	**184100601**		497042	**184120711**	Heng Tong
Liberty Rst	125	2004	2005	M38100	564683	**184100601**		497042	**184120711**	Heng Tong
Liberty Rst Ptt	125	2005	2011	M38103	648083	**184100731**		497042	**184120711**	Heng Tong
Liberty Sport	125	2006	2006	M38104	564683	**184100601**		497042	**184120711**	Heng Tong
Mp3	125	2006	2008	M47300	600475	**184120661**	Heng Tong	646829	**184120601**	Brembo
Mp3 Ibrido	125	2009	2010	M65100	600475	**184120661**	Heng Tong	646829	**184120601**	Brembo
Mp3 Ie	125	2008	2009	M63100	600475	**184120661**	Heng Tong	646829	**184120601**	Brembo
Mp3 Ie Touring	125	2011	2012	M63100	600475	**184120661**	Heng Tong	646829	**184120601**	Brembo
Mp3 Yourban Erl	125	2011	2013	M71200	600475	**184120661**	Heng Tong	646829	**184120601**	Brembo
Skipper	125	1994	1997	CSM1T\CVM1T	564689	**184100111**		494951	**184120231**	
Skipper 4T	125	2000	2002	M2100	564681	**184100861**		494952	**184120111**	Grimeca
Skipper Lx	125	1998	1999	M120\130	564681	**184100861**		494952	**184120111**	Grimeca
Typhoon 4T 2V Euro3	125	2010	2011	C5010	564681	**184100861**		646832	**184120651**	Heng Tong
Vespa	125	1958	1965	VNA\VNB	33882	**184100891**		033882	**184100891**	
Vespa Et4	125	1996	1998	M0400	564642	**184100201**		494948	**184120261**	Grimeca
Vespa Et4	125	1996	1998	M0400	564642	**184100201**		497039	**184120641**	Heng Tong
Vespa Et4	125	1999	2002	M1900	564642	**184100201**		494948	**184120261**	Grimeca
Vespa Et4	125	1999	2002	M1900	564642	**184100201**		497039	**184120641**	Heng Tong
Vespa Fl	125	1989	1990	VMX7T	-	**184100261**	Cromata	-	**184120291**	Cromata
Vespa Fl	125	1989	1990	VMX7T	265948	**184100961**	Nera	265947	**184120281**	Nera
Vespa Fl	125	1989	1990	VMX7T	-	**184100971**	Grigia	-	**184120911**	Grigia
Vespa Granturismo	125	2003	2005	M311\312	497042	**184120711**	Heng Tong	497042	**184120711**	Heng Tong
Vespa Granturismo	125	2006	2007	M31101	497042	**184120711**	Heng Tong	497042	**184120711**	Heng Tong
Vespa Granturismo Euro 3	125	2006	2007	M31300	497042	**184120711**	Heng Tong	497042	**184120711**	Heng Tong
Vespa Gts 4T Ie Super	125	2009	2016	M45300	497042	**184120711**	Heng Tong	497042	**184120711**	Heng Tong
Vespa Gts Euro3	125	2007	2012	M31300	497042	**184120711**	Heng Tong	497042	**184120711**	Heng Tong
Vespa Gts Ie Abs E4	125	2016	2016	MA3100\3200	497042	**184120711**	Heng Tong	497042	**184120711**	Heng Tong
Vespa Lx	125	2005	2006	M44100	564683	**184100601**		497042	**184120711**	Heng Tong
Vespa Lx 4T 3V Ie - Touring	125	2012	2013	-	564683	**184100601**		497042	**184120711**	Heng Tong
Vespa Lx 4T Euro3 Touring	125	2010	2011	M68100	564683	**184100601**		497042	**184120711**	Heng Tong
Vespa Lx 4T Fl	125	2009	2009	M44100	564683	**184100601**		497042	**184120711**	Heng Tong
Vespa Lx Euro 3	125	2006	2008	M44300	564683	**184100601**		497042	**184120711**	Heng Tong
Vespa Lx Euro 3 Ie	125	2009	2011	M68100	564683	**184100601**		497042	**184120711**	Heng Tong
Vespa Lx Primavera 4T 3V Ie	125	2013	2016	M81100	564683	**184100601**		497042	**184120711**	Heng Tong
Vespa Lxv 4T Euro3	125	2006	2009	M44301	648115	**184100821**		-	**-**	



Modello *Model*	CC	Da *From*	A *To*	Telaio *Frame*	OEM Leva sx *Left Lever OEM Number*	Leva sinistra *Left Lever*	Note leva sinistra *Left Lever Notes*	OEM Leva dx *Right Lever OEM Number*	Leva destra *Right Lever*	Note leva destra *Right Lever Notes*
Vespa Lxv 4T Navy Euro3	125	2007	2008	M44301	648115	**184100821**		-	-	
Vespa Lxv Ie 4T	125	2010	2013	P68102	648115	**184100821**		-	-	
Vespa Primavera 4T 3V Iget Abs	125	2016	2016	MA1100	564683	**184100601**		497042	**184120711**	Heng Tong
Vespa Primavera Et3	125	1967	1967	VMA2T	147319	**184100881**		147319	**184100881**	
Vespa Primavera Et3	125	1976	1983	VMB1T	165279	**184100211**		165279	**184100211**	
Vespa Primavera Et3	125	1976	1983	VMB1T	165279	**184100431**		165279	**184100431**	
Vespa Primavera Et3	125	1976	1983	VMB1T	165279	**184100431**		165279	**184100431**	
Vespa Primavera Et3	125	-	-	-	610285M	**184100941**	Grigia	610285M	**184100941**	Grigia
Vespa Px	125	1998	2001	VNX2\VLX1\VSX1	138336	**184100251**		138336	**184100251**	
Vespa Px	125	2011	2017	M74100	138336	**184100251**		138336	**184100251**	
Vespa Px 30 Anni	125	2007	2008	M09302	138336	**184100251**		138336	**184100251**	
Vespa Px Arcobaleno (Freno A Disco)	125	1984	1997	-	2425314	**184100911**		494804	**184120791**	
Vespa Px Euro 2	125	2001	2007	M09302	138336	**184100251**		138336	**184100251**	
Vespa Px T5	125	1985	1989	VNX5T	-	**184100250**	Nera	-	**184100250**	Nera
Vespa Px T5	125	1985	1989	VNX5T	2425314	**184100251**	Grigia	2425314	**184100251**	Grigia
Vespa Pxe Arcobaleno	125	1981	1983	VNX\VLX\VSX	-	**184100250**	Nera	-	**184100250**	Nera
Vespa Pxe Arcobaleno	125	1981	1983	VNX\VLX\VSX	2425314	**184100251**	Grigia	2425314	**184100251**	Grigia
Vespa S 4T 3V Ie	125	2012	2012	MM68301	564683	**184100601**		497042	**184120711**	Heng Tong
Vespa S 4T Euro 3	125	2007	2008	M44302	564683	**184100601**		497042	**184120711**	Heng Tong
Vespa S 4T Ie & College	125	2009	2011	M68101	564683	**184100601**		497042	**184120711**	Heng Tong
Vespa Sprint 4T 3V Ie	125	2014	2015	M81300\01	564683	**184100601**		497042	**184120711**	Heng Tong
Vespa Sprint Iget 4T 3V Abs	125	2016	2017	MA1300	564683	**184100601**		497042	**184120711**	Heng Tong
Vespa Super	125	1965	1965	VNC1T	70578	**184100212**		070578	**184100212**	
X Evo	125	2007	2016	M36601	600475	**184120661**	Heng Tong	600475	**184120661**	Heng Tong
X7 Euro 3	125	2008	2008	M62100	600475	**184120661**	Heng Tong	600475	**184120661**	Heng Tong
X7 Evo Ie Euro 3	125	2009	2010	M62101	600475	**184120661**	Heng Tong	600475	**184120661**	Heng Tong
X8	125	2004	2004	PM36200\PM36300	497170	**184120661**	Heng Tong	497170	**184120661**	Heng Tong
X8	125	2005	2006	M36301	600475	**184120661**	Heng Tong	600475	**184120661**	Heng Tong
X8 Premium Euro 2	125	2006	2006	M36301	600475	**184120661**	Heng Tong	600475	**184120661**	Heng Tong
X8 Premium Euro 3	125	2006	2007	M36600	600475	**184120661**	Heng Tong	600475	**184120661**	Heng Tong
X8 Street Euro 2	125	2006	2007	M49100	647552	**184100851**		600475	**184120661**	Heng Tong
X8 Street Euro 2	125	2006	2007	M49100	600475	**184120661**	Heng Tong	600475	**184120661**	Heng Tong
X9	125	2001	2002	M2300001	497031	**184120601**	Brembo	497031	**184120601**	Brembo
X9 Evolution	125	2003	2003	M2300035	497031	**184120601**	Brembo	497031	**184120601**	Brembo
X9 Evolution	125	2005	2006	M23000	600475	**184120661**	Heng Tong	600475	**184120661**	Heng Tong
X9 Evolution Euro3	125	2007	2007	M48100	600475	**184120661**	Heng Tong	600475	**184120661**	Heng Tong
Zip	125	2000	2002	M2500	564682	**184100531**		-	-	
Fly	150	2005	2007	M42200	564683	**184100601**		646803	**184120731**	Grimeca
Fly Euro3	150	2008	2011	M57100	564683	**184100601**		646803	**184120731**	Grimeca
Liberty 4T Euro3	150	2008	2008	M38700	564683	**184100601**		497042	**184120711**	Heng Tong
Liberty 4T Sport Euro3	150	2008	2008	M38701	564683	**184100601**		497042	**184120711**	Heng Tong
Liberty Moc 4T Euro3	150	2009	2013	M67200	564683	**184100601**		497042	**184120711**	Heng Tong
Vespa	150	1958	1965	VBA\VBB	033882	**184100891**		033882	**184100891**	
Vespa Gl	150	1957	1962	VNB	070578	**184100212**		070578	**184100212**	
Vespa Gs	150	1955	1958	VS	033882	**184100891**		033882	**184100891**	
Vespa Lx	150	2005	2006	M44200	564683	**184100601**		497042	**184120711**	Heng Tong



LEVE

LEVERS

Modello *Model*	**CC**	**Da** *From*	**A** *To*	**Telaio** *Frame*	**OEM Leva sx** *Left Lever OEM Number*	**Leva sinistra** *Left Lever*	**Note leva sinistra** *Left Lever Notes*	**OEM Leva dx** *Right Lever OEM Number*	**Leva destra** *Right Lever*	**Note leva destra** *Right Lever Notes*
Vespa Lx 4T 3V Ie - Touring	150	2012	2013	M68400	564683	**184100601**		497042	**184120711**	Heng Tong
Vespa Lx 4T FI	150	2009	2009	M44400	564683	**184100601**		497042	**184120711**	Heng Tong
Vespa Lx Euro 3	150	2006	2008	M44400	564683	**184100601**		497042	**184120711**	Heng Tong
Vespa Lx Euro 3 Ie	150	2009	2011	M68200	564683	**184100601**		497042	**184120711**	Heng Tong
Vespa Lx Touring	150	2010	2012	-	564683	**184100601**		497042	**184120711**	Heng Tong
Vespa Primavera 4T 3V Iget Abs	150	2016	2017	MA1200	564683	**184100601**		497042	**184120711**	Heng Tong
Vespa Primavera 4T-3V	150	2013	2016	M81200	564683	**184100601**		497042	**184120711**	Heng Tong
Vespa Px	150	2011	2017	M74200	138336	**184100251**		138336	**184100251**	
Vespa S 4T	150	2008	2009	M44402	564683	**184100601**		646803	**184120731**	Grimeca
Vespa S 4T Ie & College	150	2009	2012	M68201	564683	**184100601**		497042	**184120711**	Heng Tong
X8 Street Euro 2	150	2006	2008	M49200	647552	**184100851**		600475	**184120661**	Heng Tong
X8 Street Euro 2	150	2006	2008	M49200	600475	**184120661**	Heng Tong	600475	**184120661**	Heng Tong
Vespa Gs	160	1962	1962	VSB	033882	**184100891**		033882	**184100891**	
Vespa Rally	180	1968	1968	VSD1T	120487	**184100901**		120487	**184100901**	
X9 Amalfi	180	2000	2003	M2300002	497031	**184120601**	Brembo	497031	**184120601**	Brembo
Carnaby	200	2007	2008	M60100	646829	**184120601**	Brembo	646829	**184120601**	Brembo
Carnaby	200	2007	2008	M60100	600475	**184120661**	Heng Tong	600475	**184120661**	Heng Tong
Liberty	200	2006	2006	M38400	564683	**184100601**		646803	**184120731**	Grimeca
Liberty 4T Euro3	200	2006	2008	M38500	564683	**184100601**		497042	**184120711**	Heng Tong
Liberty 4T Sport Euro3	200	2006	2007	M38501	564683	**184100601**		497042	**184120711**	Heng Tong
Liberty Rst	200	2004	2004	M3840001	564683	**184100601**		646803	**184120731**	Grimeca
Liberty Sport	200	2006	2006	M38401	564683	**184100601**		646803	**184120731**	Grimeca
Vespa Granturismo	200	2006	2007	M31200	497042	**184120711**	Heng Tong	497042	**184120711**	Heng Tong
Vespa Rally	200	1972	1972	VSE1T	120487	**184100901**		120487	**184100901**	
X8	200	2005	2007	M36200	600475	**184120661**	Heng Tong	600475	**184120661**	Heng Tong
X9	200	2002	2003	M2300003	497031	**184120601**	Brembo	497031	**184120601**	Brembo
X9 Evolution	200	2003	2003	M2300003	497031	**184120601**	Brembo	497031	**184120601**	Brembo
Beverly	250	2005	2007	M28500	646829	**184120601**	Brembo	646829	**184120601**	Brembo
Beverly	250	2006	2007	M28500	600475	**184120661**	Heng Tong	600475	**184120661**	Heng Tong
Beverly Cruiser	250	2007	2009	M28802	649196	**184120921**		649196	**184120921**	
Beverly Euro 3 Mic	250	2007	2007	M28800	646829	**184120601**	Brembo	646829	**184120601**	Brembo
Beverly Euro 3 Mic	250	2007	2007	M28800	600475	**184120661**	Heng Tong	600475	**184120661**	Heng Tong
Beverly Ie Euro 3	250	2006	2008	M28800	646829	**184120601**	Brembo	646829	**184120601**	Brembo
Beverly Ie Euro 3	250	2006	2008	M28800	600475	**184120661**	Heng Tong	600475	**184120661**	Heng Tong
Beverly Rst	250	2004	2005	M28500	497031	**184120601**	Brembo	497031	**184120601**	Brembo
Beverly Rst	250	2004	2005	M28500	600475	**184120661**	Heng Tong	600475	**184120661**	Heng Tong
Beverly Sport	250	2006	2008	M28800	646829	**184120601**	Brembo	646829	**184120601**	Brembo
Beverly Sport	250	2006	2008	M28800	600475	**184120661**	Heng Tong	600475	**184120661**	Heng Tong
Beverly Tourer Euro3	250	2007	2009	M28801	646829	**184120601**	Brembo	646829	**184120601**	Brembo
Beverly Tourer Euro3	250	2007	2009	M28801	600475	**184120661**	Heng Tong	600475	**184120661**	Heng Tong
Carnaby	250	2008	2008	M60300	600475	**184120661**	Heng Tong	600475	**184120661**	Heng Tong
Carnaby	250	2008	2009	M60300	646829	**184120601**	Brembo	646829	**184120601**	Brembo
Hexagon Gt-Gtx	250	1998	2000	M1400	-	-		494891	**184120731**	Grimeca
Mp3	250	2006	2008	M47201	600475	**184120661**	Heng Tong	646829	**184120601**	Brembo
Mp3 Lt	250	2008	2009	M64100	600475	**184120661**	Heng Tong	646829	**184120601**	Brembo
Mp3 Mic	250	2008	2009	M63200	600475	**184120661**	Heng Tong	646829	**184120601**	Brembo
Vespa Gts	250	2005	2016	M45100	497042	**184120711**	Heng Tong	497042	**184120711**	Heng Tong
Vespa Gts Abs	250	2005	2012	45101	497042	**184120711**	Heng Tong	497042	**184120711**	Heng Tong
X Evo	250	2007	2016	M36401	600475	**184120661**	Heng Tong	600475	**184120661**	Heng Tong
X7 Euro 3	250	2008	2008	M62200	600475	**184120661**	Heng Tong	600475	**184120661**	Heng Tong
X8 Euro3	250	2005	2008	M36400	600475	**184120661**	Heng Tong	600475	**184120661**	Heng Tong
X9	250	2000	2001	M23000	646829	**184120601**	Brembo	646829	**184120601**	Brembo
X9 Evolution	250	2004	2004	M23000000	600475	**184120661**	Heng Tong	600475	**184120661**	Heng Tong



Modello *Model*	CC	Da *From*	A *To*	Telaio *Frame*	OEM Leva sx *Left Lever OEM Number*	Leva sinistra *Left Lever*	Note leva sinistra *Left Lever Notes*	OEM Leva dx *Right Lever OEM Number*	Leva destra *Right Lever*	Note leva destra *Right Lever Notes*
X9 Evolution	250	2006	2006	M23000	600475	**184120661**	Heng Tong	600475	**184120661**	Heng Tong
Beverly Rst 4T 4V Ie Euro3	300	2010	2015	ZAMP69200	646829	**184120601**	Brembo	646829	**184120601**	Brembo
Beverly Rst 4T 4V Ie Euro3	300	2010	2015	ZAMP69200	600475	**184120661**	Heng Tong	600475	**184120661**	Heng Tong
Beverly Tourer Euro3	300	2009	2010	M28A00	646829	**184120601**	Brembo	646829	**184120601**	Brembo
Beverly Tourer Euro3	300	2009	2010	M28A00	600475	**184120661**	Heng Tong	600475	**184120661**	Heng Tong
Carnaby Cruiser	300	2009	2012	M60400	600475	**184120661**	Heng Tong, Nera	600475	**184120661**	Heng Tong, Nera
Carnaby Cruiser	300	2009	2012	M60400	665870	**184121001**	Heng Tong, Grigia	665870	**184121001**	Heng Tong, Grigia
Mp3 300 Ie Lt	300	2010	2011	M64102	600475	**184120661**	Heng Tong	646829	**184120601**	Brembo
Mp3 300 Ie Mic	300	2010	2011	M63301	600475	**184120661**	Heng Tong	646829	**184120601**	Brembo
Mp3 4T 4V Ie Erl Ibrido	300	2010	2013	M72100	600475	**184120661**	Heng Tong	646829	**184120601**	Brembo
Mp3 4T 4V Ie Lt Ibrido	300	2010	2011	M72100	600475	**184120661**	Heng Tong	646829	**184120601**	Brembo
Mp3 Ie E4 Lt Business - Sport Abs	300	2016	2018	TA1100\TA19L	-	**-**		646829	**184120601**	Brembo
Mp3 Ie Lt- Ie Lt Sport	300	2011	2014	M64102	600475	**184120661**	Heng Tong	646829	**184120601**	Brembo
Mp3 Ie Lt Touring	300	2011	2013	M64102	600475	**184120661**	Heng Tong	646829	**184120601**	Brembo
Mp3 Ie Touring	300	2011	2012	M63301	600475	**184120661**	Heng Tong	646829	**184120601**	Brembo
Mp3 Yourban Erl	300	2011	2015	M71200	600475	**184120661**	Heng Tong	646829	**184120601**	Brembo
Mp3 Yourban Lt Erl	300	2011	2012	M75100	600475	**184120661**	Heng Tong	646829	**184120601**	Brembo
Mp3 Yourban Lt Rl E4	300	2017	2018	TA0100	600475	**184120661**	Heng Tong	646829	**184120601**	Brembo
Vespa Gts Ie & Touring	300	2012	2016	M45200	497042	**184120711**	Heng Tong	497042	**184120711**	Heng Tong
Vespa Gts Ie Abs E4	300	2016	2017	MA3300	497042	**184120711**	Heng Tong	497042	**184120711**	Heng Tong
Vespa Gts Ie Touring	300	2011	2012	M45200	497042	**184120711**	Heng Tong	497042	**184120711**	Heng Tong
Vespa Gts Super	300	2008	2016	M45200	497042	**184120711**	Heng Tong	497042	**184120711**	Heng Tong
X7 Evo Ie Euro 3	300	2009	2010	M62201	600475	**184120661**	Heng Tong	600475	**184120661**	Heng Tong
Beverly 4T 4V Ie Euro3 Sport Touring	350	2011	2014	M6930	646829	**184120601**	Brembo	646829	**184120601**	Brembo
Beverly Euro 3	400	2006	2007	M34300	646829	**184120601**	Brembo	646829	**184120601**	Brembo
Beverly Euro 3	400	2006	2007	M34300	600475	**184120661**	Heng Tong	646829	**184120601**	Brembo
Beverly Tourer Euro3	400	2008	2010	M34400	646829	**184120601**	Brembo	646829	**184120601**	Brembo
Beverly Tourer Euro3	400	2008	2010	M34400	600475	**184120661**	Heng Tong	646829	**184120601**	Brembo
Mp3	400	2007	2008	M59100\01	600475	**184120661**	Heng Tong	646829	**184120601**	Brembo
Mp3 Ie Lt - Mp3 Ie Lt Sport	400	2008	2010	M64200	600475	**184120661**	Heng Tong	646829	**184120601**	Brembo
Mp3 Ie Lt Touring	400	2011	2011	M64200	600475	**184120661**	Heng Tong	646829	**184120601**	Brembo
Mp3 Mic	400	2008	2010	M59102	600475	**184120661**	Heng Tong	646829	**184120601**	Brembo
Mp3 Rl Touring	400	2011	2011	M59101	600475	**184120661**	Heng Tong	646829	**184120601**	Brembo
X Evo	400	2007	2011	M52101	600475	**184120661**	Heng Tong	646829	**184120601**	Brembo
X8 Euro3	400	2006	2008	M52100	600475	**184120661**	Heng Tong	646829	**184120601**	Brembo
Beverly	500	2002	2006	M34100	646829	**184120601**	Brembo	646829	**184120601**	Brembo
Beverly	500	2005	2006	M34100	600475	**184120661**	Heng Tong	646829	**184120601**	Brembo
Beverly Cruiser	500	2007	2012	M34500	649196	**184120921**		649196	**184120921**	
Beverly Euro 3	500	2006	2008	M34200	646829	**184120601**	Brembo	646829	**184120601**	Brembo
Beverly Euro 3	500	2006	2008	M34200	600475	**184120661**	Heng Tong	646829	**184120601**	Brembo
Mp3 Lt Business Abs	500	2014	2016	M86100	600475	**184120661**	Heng Tong	646829	**184120601**	Brembo
Mp3 Lt E4 Sport - Business	500	2016	2018	TA1200	600475	**184120661**	Heng Tong	646829	**184120601**	Brembo
Mp3 Lt Sport - Business	500	2011	2013	M64300	600475	**184120661**	Heng Tong	646829	**184120601**	Brembo
Mp3 Rl Sport - Business	500	2011	2012	M59200	600475	**184120661**	Heng Tong	646829	**184120601**	Brembo



LEVE

LEVERS

Modello *Model*	**CC**	**Da** *From*	**A** *To*	**Telaio** *Frame*	**OEM Leva sx** *Left Lever OEM Number*	**Leva sinistra** *Left Lever*	**Note leva sinistra** *Left Lever Notes*	**OEM Leva dx** *Right Lever OEM Number*	**Leva destra** *Right Lever*	**Note leva destra** *Right Lever Notes*
Mp3 Sport Abs	500	2014	2016	M86100	600475	**184120661**	Heng Tong	646829	**184120601**	Brembo
X9	500	2001	2002	M2700	497031	**184120601**	Brembo	497031	**184120601**	Brembo
X9 Evolution	500	2003	2005	M2700004	600829	**184120531**	Grimeca	600829	**184120531**	Grimeca
X9 Evolution	500	2003	2005	M2700004	497031	**184120601**	Brembo	497031	**184120601**	Brembo
X9 Evolution	500	2006	2007	M27000	646829	**184120601**	Brembo	646829	**184120601**	Brembo
X9 Evolution Abs	500	2006	2007	M27000	600829	**184120531**	Grimeca	600829	**184120531**	Grimeca
RIEJU										
Paseo 50 4T	50	2007	2008	-	-	**-**		-	**184122410**	
Toreo 50 4T	50	2007	2008	-	-	**-**		-	**184122410**	
SACHS										
49Er 50 4T 10´ Rad	50	2005	2006	-	-	**-**		-	**184122410**	
49Er 50 4T 12´ Rad	50	2007	2009	FY50QT-5	-	**-**		-	**184122410**	
Bee 50 4T	50	2007	2010	FY50QT-13	-	**-**		-	**184122410**	
Limbo 50 Lm	50	1997	1997	441	-	**-**		-	**184120671**	Ajp
Limbo 50 Lm	50	1997	1997	441	-	**-**		-	**184120691**	Ajp
Squab 50	50	1997	1997	S1A03	-	**-**		-	**184120671**	Ajp
Squab 50	50	1997	1997	S1A03	-	**-**		-	**184120691**	Ajp
Squab 50	50	1997	1997	S1A03	-	**-**		-	**184120701**	Heng Tong
SHERCO										
Enduro 450 4,5 I	450	2007	2008	-	2127085000	**184102250**	Corta	-	**-**	
Se 450 4,5 I-F	450	2009	2011	-	2127085000	**184102250**	Corta	-	**-**	
Se 450 4,5 I-F Supermotard	450	2008	2010	-	2127085000	**184102250**	Corta	-	**-**	
Enduro 510 5,1 I	510	2007	2008	-	2127085000	**184102250**	Corta	-	**-**	
Se 510 5,1 I-F	510	2009	2009	-	2127085000	**184102250**	Corta	-	**-**	
Se 510 5,1 I-F	510	2011	2011	-	2127085000	**184102250**	Corta	-	**-**	
Se 510 5,1 I-F Supermotard	510	2008	2010	-	2127085000	**184102250**	Corta	-	**-**	
SUZUKI										
Aj Zz Sepia S	50	1995	1997	CA1HC	-	**-**		57421-29C00-000	**184120621**	
Ug110 Hokuto	110	2000	2000	A7111	-	**-**		57421-29C00-000	**184120621**	
An S-Y	125	1995	2000	CF42A	-	**-**		57421-29C00-000	**184120621**	
Dr125 Sm K9-L0	125	2009	2010	CS111	57621-13E00-000	**184102500**		57421-44E00-000	**184122370**	
Dr-Z125 K8-L0	125	2008	2010	DF43A\DF43B	57621-13E00-000	**184102500**		-	**-**	
Dr-Z125L L6-L7	125	2016	2017	DF43B	57621-13E00-000	**184102500**		-	**-**	
Gz Marauder W-Y	125	1998	2000	AP111	57621-33E00-000	**184102010**		57300-32C10-000	**184122120**	
Rg125F N-R	125	1992	1994	NF13A	57620-38C00-000	**184102180**		-	**-**	
Rv125 Van Van K3-K7	125	2003	2007	BT111	57621-33E01-000	**184102010**		57421-14F00-000	**184120631**	
Rv125 Van Van K8-L0	125	2008	2010	BT111	57621-33E01-000	**184102010**		57421-14F00-000	**184120631**	
Rv125 Van Van L3	125	2013	2013	BT111	57621-40F00-000	**184102010**		57421-14F00-000	**184120631**	
Rv125 Van Van L5	125	2015	2015	BT111	57621-40F00-000	**184102010**		57421-14F00-000	**184120631**	
Uc Epicuro X-K1	125	1999	2001	AX111\AX211\AX311	-	**-**		57421-29C00-000	**184120621**	
Uh125 Burgman K2-K6	125	2002	2006	BP111	57500-14F00-000	**184100521**		57421-14F00-000	**184120631**	
Uh125 Burgman K7-L3	125	2007	2013	CC111\CC112	57500-14F00-000	**184100521**		57421-14F00-000	**184120631**	
Uh125 Burgman L4	125	2014	2014	C8111\C8112	57500-14F00-000	**184100521**		57421-14F00-000	**184120631**	
Uh125 Burgman L6	125	2016	2016	C8111\C8112	57500-14F00-000	**184100521**		57421-14F00-000	**184120631**	
Uh125A Burgman L7-L9	125	2017	2019	C8132	57500-14F00-000	**184100521**		57421-14F00-000	**184120631**	
Ux Sixteen K8-L0	125	2008	2010	CN111	57500-14F00-000	**184100521**		57421-14F00-000	**184120631**	
Ux Sixteen L1	125	2011	2011	CN111	57500-14F00-000	**184100521**		57421-14F00-000	**184120631**	
Vl Intruder K5-K7	125	2005	2007	A4111\A4211	57621-33E01-000	**184102010**		-	**-**	
Vl Intruder Y-K1	125	2000	2001	A4121	57621-33E00-000	**184102010**		-	**-**	
An150 T-Y	150	1996	2000	CG41A	-	**-**		57421-29C00-000	**184120621**	
Uc Epicuro X-K1	150	1999	2001	AY111	-	**-**		57421-29C00-000	**184120621**	
Uh200 Burgman K2-K6	150	2002	2006	BR111	57500-14F00-000	**184100521**		57421-14F00-000	**184120631**	



Modello *Model*	CC	Da *From*	A *To*	Telaio *Frame*	OEM Leva sx *Left Lever OEM Number*	Leva sinistra *Left Lever*	Note leva sinistra *Left Lever Notes*	OEM Leva dx *Right Lever OEM Number*	Leva destra *Right Lever*	Note leva destra *Right Lever Notes*
Ux Sixteen K8-L0	150	2008	2010	CP111	57500-14F00-000	**184100521**		57421-14F00-000	**184120631**	
Ux Sixteen L1	150	2011	2011	CP111	57500-14F00-000	**184100521**		57421-14F00-000	**184120631**	
Rv200 Van-Van	200	2016	2016	BT221	57621-40F00-000	**184102010**		57300-33E01-000	**184122150**	
Uh200 Burgman K7-L6	200	2007	2016	-	57500-14F00-000	**184100521**		57421-14F00-000	**184120631**	
Uh200(A) Burgman L5	200	2015	2015	C9111\C9112	57500-14F00-000	**184100521**		57421-14F00-000	**184120631**	
Uh200A Burgman L7-L9	200	2017	2019	-	57500-14F00-000	**184100521**		57421-14F00-000	**184120631**	
An250 Burgman W-K6	250	1998	2006	AN111	57500-14F00-000	**184100521**		57421-14F00-000	**184120631**	
Gz Marauder K2	250	2002	2002	AR121\AR141	57621-33E01-000	**184102010**		-	**-**	
Gz Marauder X-K1	250	1999	2001	AR111\AR121\AR131	57621-33E01-000	**184102010**		57300-32C10-000	**184122120**	
Tu250X V-K1	250	1997	2001	AB111	57621-33E00-000	**184102010**		57300-32C01-000	**184122120**	
Vl Intruder K5-K7	250	2005	2007	A5111	57621-33E01-000	**184102010**		57300-32C10-000	**184122120**	
Vl Intruder Y-K1	250	2000	2001	A5121	57621-33E01-000	**184102010**		57300-32C10-000	**184122120**	
An400 Burgman L4-L6	400	2014	2016	CG111\CG113\CG114	-	**-**		57421-14F00-000	**184120631**	
An400 Burgman X-L3	400	1999	2011	-	57500-14F00-000	**184100521**		57421-14F00-000	**184120631**	
Dr-Z400 Y-K3	400	2000	2003	BE111	57621-13E00-000	**184102500**		57421-44E00-000	**184122370**	
Dr-Z400E K5-K7	400	2005	2007	BB111\BF111	57621-13E00-000	**184102500**		57421-44E00-000	**184122370**	
Dr-Z400S K5-K9	400	2005	2009	BC111	57621-13E00-000	**184102500**		57421-44E00-000	**184122370**	
Dr-Z400S Y-K4	400	2000	2004	BC111	57621-13E00-000	**184102500**		57421-44E00-000	**184122370**	
Dr-Z400Sm K5-K9	400	2005	2009	B8111\B8211	57621-13E00-000	**184102500**		57421-44E00-000	**184122370**	
Gs500 K1-K2	500	2001	2002	BK111	57620-01D00-000	**184102180**		57300-33E01-000	**184122150**	
Gs500 K3-K6	500	2003	2006	BK111\BK211\BK221	57620-01D00-000	**184102180**		57420-33E01-000	**184122150**	
Gs500E K-T	500	1989	1996	GM51A	57620-01D00-000	**184102180**		57300-32C01-000	**184122120**	
Gs500H/Fh K7	500	2007	2007	BK211\BK221\BK411	57620-01D00-000	**184102180**		57420-0AE00-000	**184122210**	
Gsf600 Bandit S-W	600	1995	1998	GN77A	57620-01D00-000	**184102180**		-	**-**	
Gsf600 Bandit Y-K4	600	2000	2004	A8111\A8112\A8113	57620-38C00-000	**184102180**		57300-33E01-000	**184122150**	
Gsr600 K6-L0	600	2006	2010	B9111\B9211	57621-33E01-000	**184102010**		57300-44G00-000	**184122610**	
Gsx-R600 K1-K3	600	2001	2003	BG111\BG121\BG211	57621-33E01-000	**184102010**		57300-33E01-000	**184122150**	
Gsx-R600 K4-K5	600	2004	2005	B2111\B2121\B2211	57621-40F00-000	**184102010**		57300-29G00-000	**184122310**	
Gsx-R600 V-Y	600	1997	2000	AD111\AD121\AD211	57621-33E00-000	**184102010**		57300-32C10-000	**184122120**	
Vs600Gl Intruder S-V	600	1995	1997	VN51A	57621-38A02-000	**184102030**		-	**-**	
Dl650 V-Strom K7-L0	650	2007	2010	B1111\B1211\B1112	-	**-**		57300-44G00-000	**184122610**	
Dl650 V-Strom L2	650	2012	2012	C7111	57621-33E01-000	**184102010**		-	**-**	
Dl650A V-Strom Abs L3	650	2013	2013	C7111\C7211	57621-40F00-000	**184102010**		-	**-**	
Dl650A V-Strom Abs L4	650	2014	2014	C7111\C7211	57621-40F00-000	**184102010**		-	**-**	
Dl650A V-Strom Abs L5	650	2015	2015	C7111\C7211	57621-40F00-000	**184102010**		-	**-**	
Dl650A(Ue)/Xa(Ue) V-Strom	650	2017	2017	C733A\C743F	57621-40F00-000	**184102010**		-	**-**	
Dl650A(Ue)/Xa(Ue) L6 V-Strom	650	2016	2016	C711?\C721?	57621-40F00-000	**184102010**		-	**-**	
Dl650Xt V-Strom	650	2015	2015	C7112\C7212	57621-40F00-000	**184102010**		-	**-**	
Gsf Bandit K5-K6	650	2005	2006	B5111\B5112\B5113	57621-38G00-000	**184102390**		57300-33E01-000	**184122150**	
Gsf Bandit K7-K8	650	2007	2008	CJ122\CJ212\CJ111	57500-24F10-000	**184102120**		-	**-**	
Gsf Bandit K9-L0	650	2009	2010	CZ123\CZ111	57500-24F20-000	**184102120**		-	**-**	
Gsf Bandit L1	650	2011	2011	CZ123\CZ111	57500-24F21-000	**184102120**		57300-10G31-000	**184122380**	
Gsf Bandit L2	650	2012	2012	CZ123\CZ111	57500-24F21-000	**184102120**		57300-10G31-000	**184122380**	
Gsx F K8-L0	650	2008	2010	CJ135\CJ225\CJ136	57500-24F20-000	**184102120**		-	**-**	
Gsx F L1	650	2011	2011	CJ135\CJ225\CJ136	57500-24F21-000	**184102120**		57300-10G31-000	**184122380**	
Gsx F L2	650	2012	2012	CJ135\CJ225\CJ136	57500-24F21-000	**184102120**		57300-10G31-000	**184122380**	
Ls650P Savage G-R	650	1986	1994	NP41A	57620-24B01-000	**184102200**		-	**-**	
Ls650P Savage T-V	650	1996	1997	NP41A	57620-24B01-000	**184102200**		-	**-**	
Sfv Gladius K9-L0	650	2009	2010	CX111\CX211\CX112	57621-40F00-000	**184102010**		-	**-**	



LEVE

LEVERS

Modello *Model*	**CC**	**Da** *From*	**A** *To*	**Telaio** *Frame*	**OEM Leva sx** *Left Lever OEM Number*	**Leva sinistra** *Left Lever*	**Note leva sinistra** *Left Lever Notes*	**OEM Leva dx** *Right Lever OEM Number*	**Leva destra** *Right Lever*	**Note leva destra** *Right Lever Notes*
Sfv Gladius L1-L4	650	2011	2014	CX111\CX211\CX112	57621-40F00-000	**184102010**		-	-	
Sfv650(U/A/Ua) Gladius L5	650	2015	2015	CX111\CX211\CX112	57621-40F00-000	**184102010**		-	-	
Sv K3-K7	650	2003	2007	BY111\BY132\BY113	-	-		57300-44G00-000	**184122610**	
Sv K8-L0	650	2008	2010	BY111\BY132\BY113	-	-		57300-44G00-000	**184122610**	
Sv650A L7	650	2017	2017	CX123\CX243	57621-40F00-000	**184102010**		-	-	
Gsr750(A)L6	750	2016	2016	C5111\C5112	57621-40F00-000	**184102010**		-	-	
Gsr750L2	750	2012	2012	C5111\C5211	57621-40F00-000	**184102010**		-	-	
Gsr750L3	750	2013	2013	C5111\C5211	57621-40F00-000	**184102010**		-	-	
Gsr750Z(A)L4	750	2014	2014	C5111\C5112	57621-40F00-000	**184102010**		-	-	
Gsr750Z(A)L5	750	2015	2015	C5111\C5112	57621-40F00-000	**184102010**		-	-	
Gsx750 W-K1	750	1998	2001	AE111\AE121\AE211	57620-01D00-000	**184102180**		-	-	
Gsx-R750 K4-K5	750	2004	2005	B3111\B3121\B3211	57621-40F00-000	**184102010**		57300-29G00-000	**184122310**	
Gsx-R750 T-X	750	1996	1999	GR7DA	57621-33E00-000	**184102010**		57300-32C10-000	**184122120**	
Gsx-R750 Y-K3	750	2000	2003	BD111\BD121\BD211	57621-33E01-000	**184102010**		57300-33E01-000	**184122150**	
Vs750Gl Intruder F-M	750	1985	1991	VR51A	57621-38A02-000	**184102030**		-	-	
Vl800 Intruder C800 K6-L0	800	2006	2010	BM111\BM211	57620-24B01-000	**184102200**		57300-41F10-000	**184122380**	
Vl800 Intruder Volusia K1-K5	800	2001	2005	BM111\BM121	57620-24B01-000	**184102200**		57300-41F00-000	**184122380**	
Vs800 Gl Intruder N-S	800	1992	1995	VS52A	57621-38A02-000	**184102030**		-	-	
Vz800 Intruder M800 K5-K9	800	2005	2009	B4111\B4211	57620-24B01-000	**184102200**		57300-41F10-000	**184122380**	
Vz800 Marauder V-K2	800	1997	2002	AF111	57620-24B01-000	**184102200**		57300-32C10-000	**184122120**	
Rf900R R-T	900	1994	1996	GT73A	57621-38A02-000	**184102030**		-	-	
Dl1000 V-Strom	1000	2014	2014	DD111	57500-24F22-000	**184102120**		57300-10G32-000	**184122380**	
Dl1000 V-Strom L5	1000	2015	2015	DD111	57500-24F22-000	**184102120**		57300-10G32-000	**184122380**	
Dl1000 V-Strom L6	1000	2016	2016	DD111	57500-24F22-000	**184102120**		57300-10G32-000	**184122380**	
Gsx-R1000 K1-K2	1000	2001	2002	BL111	57621-40F00-000	**184102010**		57300-33E01-000	**184122150**	
Gsx-R1000 K3-K4	1000	2003	2004	BZ111\BZ211	57621-40F00-000	**184102010**		57300-33E01-000	**184122150**	
Gsx-R1000 K7-K8	1000	2007	2008	CL111\CL211	57500-24F00-000	**184102120**		57300-29G00-000	**184122310**	
Sv1000 K6-K7	1000	2006	2007	BX431\BX441\BX621	57500-24F00-000	**184102120**		57300-33E01-000	**184122150**	
Sv1000K3-K5	1000	2003	2005	BX111\BX121\BX211	57500-24F00-000	**184102120**		57300-33E01-000	**184122150**	
Tl1000R W-Y	1000	1998	2000	AM111	57500-02FA0-000	**184102120**		57420-33E01-000	**184122150**	
Tl1000S V-K1	1000	1997	2001	AG111	57621-33E00-000	**184102010**		57300-32C01-000	**184122120**	
Gsx-R K-L	1100	1989	1990	GV73B	57621-38A02-000	**184102030**		-	-	
Gsx-R M-N	1100	1991	1992	GV73F	57621-38A02-000	**184102030**		-	-	
Gsx-R W P-T	1100	1993	1996	GU75A	57621-38A02-000	**184102030**		-	-	
Gsf Bandit K1-K5	1200	2001	2005	A9111\A9112	57500-24F00-000	**184102120**		57300-33E01-000	**184122150**	
Gsf Bandit K6	1200	2006	2006	CB111\CB114	57500-24F00-000	**184102120**		57300-44G00-000	**184122610**	
Gsf Bandit T-Y	1200	1996	2000	GV75A	57621-38A02-000	**184102030**		-	-	
Gsx1200 X-K1	1200	1999	2001	A3111	57621-38A02-000	**184102030**		57420-33E01-000	**184122150**	
Gsf1250 Bandit K7-L0	1250	2007	2010	CH113\CH124	57500-24F20-000	**184102120**		-	-	
Gsf1250 Bandit L0	1250	2010	2010	CH122\CH124	57500-24F20-000	**184102120**		-	-	
Gsf1250 Bandit L1	1250	2011	2011	CH122\CH124	57500-24F21-000	**184102120**		57300-10G31-000	**184122380**	
Gsf1250S Bandit L1	1250	2011	2011	CH111\CH113	57500-24F21-000	**184102120**		57300-10G31-000	**184122380**	
Gsf1250S Bandit L2	1250	2012	2012	CH111\CH113	57500-24F21-000	**184102120**		57300-10G31-000	**184122380**	
Gsf1250Sa Bandit L5-L6	1250	2015	2016	CH113	57500-24F22-000	**184102120**		57300-10G32-000	**184122380**	
Gsx1250Fa L0	1250	2010	2010	CH135	57500-24F20-000	**184102120**		-	-	
Gsx1250Fa L1	1250	2011	2011	CH135	57500-24F21-000	**184102120**		57300-10G31-000	**184122380**	
Gsx1250Fa L2	1250	2012	2012	CH135	57500-24F21-000	**184102120**		57300-10G31-000	**184122380**	
Gsx1250Fa L4	1250	2014	2014	CH135	57500-24F22-000	**184102120**		57300-10G32-000	**184122380**	
Gsx1250Fa L6	1250	2016	2016	CH135	57500-24F22-000	**184102120**		57300-10G32-000	**184122380**	
Gsz1300R Hayabusa K4-K7	1300	2004	2007	A1111\A1131\A1211	57500-24F00-000	**184102120**		57300-33E01-000	**184122150**	



Modello *Model*	CC	Da *From*	A *To*	Telaio *Frame*	OEM Leva sx *Left Lever OEM Number*	Leva sinistra *Left Lever*	Note leva sinistra *Left Lever Notes*	OEM Leva dx *Right Lever OEM Number*	Leva destra *Right Lever*	Note leva destra *Right Lever Notes*
Gsz1300R Hayabusa K8-L0	1300	2008	2010	CK111\CK211	57500-24F20-000	**184102120**		-	-	
Gsz1300R Hayabusa L1	1300	2011	2011	CK111\CK211	57500-24F21-000	**184102120**		57300-10G31-000	**184122380**	
Gsz1300R Hayabusa L2	1300	2012	2012	CK111\CK211	57500-24F21-000	**184102120**		57300-10G31-000	**184122380**	
Gsz1300R Hayabusa X-K3	1300	1999	2003	A1111\A1131\A1211	57500-24F00-000	**184102120**		57300-33E01-000	**184122150**	
Gsx K2-K5	1400	2002	2005	BN111\BN211	57500-24F00-000	**184102120**		57300-33E01-000	**184122150**	
Gsx K6-K7	1400	2006	2007	BN111\BN121	57500-24F00-000	**184102120**		57300-10G10-000	**184122380**	
Vl Intruder Lc K5-K8	1500	2005	2008	AL211	57620-10F00-000	**184102130**		57300-48E00-000	**184122120**	
Vl Intruder Lc W-K3	1500	1998	2003	AL111	57620-10F00-000	**184102130**		57300-32C10-000	**184122120**	
SYM										
Cinderella	50	1999	2002	HA05W-6\HA05W-6	-	-		53175GW0750	**184120431**	
Dd	50	2002	2002	FT05W-6	53178T46900	**184100381**		53175GW0750	**184120431**	
Dd Eu2	50	2003	2007	FT05V1-6	53178T46900	**184100381**		53175GW0750	**184120431**	
Fiddle Ii	50	2008	2008	AW05W-6	5317AGAKV00	**184100481**		53175AAA000	**184121110**	
Fiddle Ii S	50	2009	2010	AF05W-T	5317AGAKV00	**184100481**		53175AAA000	**184121110**	
Fiddle Ii S	50	2011	2013	AF05W2-T	5317AGAKV00	**184100481**		53175AAA000	**184121110**	
Fiddle III	50	2014	2014	XA05W1-IT	-	-		53175AAA000	**184121110**	
Jet Euro X Eu2	50	2003	2007	BL05W7-6	-	-		53175T6V000	**184121100**	
Jet Sport X	50	2007	2011	BK05W2-6	53178HMA000	**184101120**		53175HMA000	**184121090**	
Jet4	50	2009	2010	AD05W1-6	5317AGAKV00	**184100481**		53175T6V000	**184121100**	
Jet4 R 2T	50	2011	2014	JD05W1-6	5317AGAKV00	**184100481**		53175AAA000	**184121110**	
Simply Ii	50	2014	2014	AE05W-T	5317AGAKV00	**184100481**		53175AAA000	**184121110**	
Super Fancy	50	1998	2000	G5H3-6	-	-		53175GW0750	**184120431**	
Symphony	50	2009	2009	AY05W-T	5317AGAKV00	**184100481**		53175AAA000	**184121110**	
Symphony S	50	2010	2010	AY05W2-T	53178ARB000	**184101130**		53175T6V000	**184121100**	
Symphony S	50	2011	2011	AY05W4-T	53178ARB000	**184101130**		53175AAA000	**184121110**	
Symphony S	50	2012	2014	AY05W6-T	53178ARB000	**184101130**		53175AAA000	**184121110**	
Symphony Sr	50	2010	2010	AZ05W1-T	53178ARB000	**184101130**		53175T6V000	**184121100**	
Symphony Sr	50	2011	2011	AZ05W4-T	53178ARB000	**184101130**		53175AAA000	**184121110**	
Symphony Sr	50	2012	2014	AZ05W6-T	53178ARB000	**184101130**		53175AAA000	**184121110**	
Symphony St	50	2015	2015	XB05W1-EU	53178ARB001	**184101130**		-	-	
Symphony St 50 Euro4	50	2018	2018	XB05W4-EU	53178ARB001	**184101130**		53175T6V000	**184121100**	
Symply	50	2007	2008	AV05W-T	5317AGAKV00	**184100481**		53175AAA000	**184121110**	
Symply Ii	50	2009	2009	AE05W-T	5317AGAKV00	**184100481**		53175AAA000	**184121110**	
X Pro	50	2013	2013	AE05W4-EU	5317AGAKV00	**184100481**		53175AAA000	**184121110**	
Cinderella	100	1999	2001	HA10V2\HA10W\HA10V2\ HA10W	-	-		53175GW0750	**184120431**	
Fiddle Ii	125	2008	2008	AW12W-6	5317AGAKV00	**184100481**		53175AAA000	**184121110**	
Fiddle Ii	125	2009	2009	AW12W-T	5317AGAKV00	**184100481**		53175AAA000	**184121110**	
Fiddle Ii	125	2010	2013	AX12W1-T	5317AGAKV00	**184100481**		53175T6V000	**184121100**	
Fiddle III	125	2014	2014	XA12W1-IT	5317AGAKV00	**184100481**		53175AAA000	**184121110**	
Fiddle III 125 Cbs Euro4	125	2018	2018	XA12W2-EU	53178ARB000	**184101130**		-	-	
Gts 125	125	2006	2007	LM12W3-6	53178HMA000	**184101120**		53175HMA000	**184121090**	
Gts Joymax	125	2006	2007	LM12W-6	53178HMA000	**184101120**		53175HMA000	**184121090**	
Hd Eu2	125	2003	2004	LH12W-6	-	-		53175HHA000	**184120581**	
Hd Euro3	125	2007	2008	LH12W8-6	-	-		53175HHA000	**184120581**	
Hd Evo	125	2005	2006	LH12W5-6	53178HHW000	**184101110**		53175HHA000	**184120581**	
Hd Evo Euro3	125	2007	2008	LH12WB-6	53178HHW000	**184101110**		53175HHA000	**184120581**	
Hd Evo Euro3	125	2010	2011	LH12WB-6	53178HHW000	**184101110**		53175HHA000	**184120581**	
Hd Evo Tamburo Euro3	125	2008	2009	LH12WA-6	-	-		53175HHA000	**184120581**	
Hd2	125	2011	2011	LC12W1-6	53178HHW000	**184101110**		53175HHA000	**184120581**	
Hd2	125	2014	2014	LC12W1-6	53178HHW000	**184101110**		53175HHA000	**184120581**	
Jet V	125	2011	2011	HM12VA-6	-	-		53175AAA000	**184121110**	



LEVE

LEVERS

Modello *Model*	**CC**	**Da** *From*	**A** *To*	**Telaio** *Frame*	**OEM Leva sx** *Left Lever OEM Number*	**Leva sinistra** *Left Lever*	**Note leva sinistra** *Left Lever Notes*	**OEM Leva dx** *Right Lever OEM Number*	**Leva destra** *Right Lever*	**Note leva destra** *Right Lever Notes*
Jet14 125 Lc Euro4	125	2018	2018	XC12WW-EU	53178ARB000	**184101130**		53175T6V000	**184121100**	
Jet4	125	2009	2010	AD12W1-6	5317AGAKV00	**184100481**		53175T6V000	**184121100**	
Symphony	125	2009	2009	AY12W-T	5317AGAKV00	**184100481**		53175AAA000	**184121110**	
Symphony Cargo 125 Cbs Euro4	125	2017	2017	AY12W9-EU	-	**-**		53175T6V000	**184121100**	
Symphony S	125	2009	2009	AY12W1-T	53178ARB000	**184101130**		53175AAA000	**184121110**	
Symphony S	125	2010	2010	AY12W4-T	53178ARB000	**184101130**		53175T6V000	**184121100**	
Symphony S	125	2012	2012	AY12W7-T	53178ARB000	**184101130**		53175T6V000	**184121100**	
Symphony S	125	2013	2014	AY12W7-T	53178ARB000	**184101130**		53175AAA000	**184121110**	
Symphony S Euro4	125	2016	2016	AY12W8-EU	53178ARB000	**184101130**		53175T6V000	**184121100**	
Symphony Sr	125	2010	2010	AZ12W1-T	53178ARB000	**184101130**		53175T6V000	**184121100**	
Symphony Sr	125	2012	2014	AZ12W3-T	53178ARB000	**184101130**		53175AAA000	**184121110**	
Symphony St	125	2015	2015	XB12W1-EU	53178ARB000	**184101130**		-	**-**	
Symphony St 125I Cbs Euro4	125	2018	2018	XB12W3-EU	53178ARB000	**184101130**		-	**-**	
Symphony St 125I Lc Abs Euro4	125	2018	2018	XB12WW-EU	53178ARB000	**184101130**		-	**-**	
Symphony St Euro4	125	2016	2016	XB12W2-EU	53178ARB000	**184101130**		53175T6V000	**184121100**	
Symply	125	2007	2008	AV12W-T	-	**-**		53175AAA000	**184121110**	
Symply Ii	125	2009	2010	AV12W5-T	5317AGAKV00	**184100481**		53175AAA000	**184121110**	
Symply Ii	125	2014	2014	AE12W1-6	5317AGAKV00	**184100481**		53175AAA000	**184121110**	
X Pro	125	2013	2013	AE12W4-EU	-	**-**		53175T6V000	**184121100**	
Fiddle Ii	150	2010	2010	AX15W1-T	5317AGAKV00	**184100481**		53175T6V000	**184121100**	
Fiddle Ii	150	2012	2012	AX15W1-T	5317AGAKV00	**184100481**		53175AAA000	**184121110**	
Symphony S	150	2009	2009	AY15W1-T	53178ARB000	**184101130**		53175T6V000	**184121100**	
Symphony S	150	2010	2010	AY15W3-T	53178ARB000	**184101130**		53175T6V000	**184121100**	
Symphony S	150	2012	2012	AY15W6-T	53178ARB000	**184101130**		53175AAA000	**184121110**	
Symphony S	150	2013	2014	AY15W6-T	53178ARB000	**184101130**		53175AAA000	**184121110**	
Symphony Sr	150	2010	2010	AZ15W1-T	53178ARB000	**184101130**		53175T6V000	**184121100**	
Symphony Sr	150	2012	2014	AZ15W6-T	53178ARB000	**184101130**		53175AAA000	**184121110**	
Fiddle III	200	2015	2015	XA20W1-IT	53178ARB000	**184101130**		53175AAA000	**184121110**	
Fiddle III 200 Euro4	200	2017	2017	XA20W2-EU	53178ARB000	**184101130**		53175T6V000	**184121100**	
Hd Eu2	200	2003	2004	LH18W-6	-	**-**		53175HHA000	**184120581**	
Hd Euro3 I	200	2007	2007	LH18W8-6	-	**-**		53175HHA000	**184120581**	
Hd Evo Euro2	200	2005	2006	LH18W5-6	53178HHW000	**184101110**		53175HHA000	**184120581**	
Hd Evo Euro3 I	200	2007	2007	LH18W7-6	53178HHW000	**184101110**		53175HHA000	**184120581**	
Hd Evo I Euro3	200	2010	2012	LH18W7-6	53178HHW000	**184101110**		53175HHA000	**184120581**	
Hd Evo I Tamburo Euro3	200	2008	2009	LH182WA-6	-	**-**		53175HHA000	**184120581**	
Hd2 I	200	2011	2011	LC18W1-6	53178HHW000	**184101110**		53175HHA000	**184120581**	
Hd2 I	200	2014	2014	LC18W1-6	53178HHW000	**184101110**		53175HHA000	**184120581**	
Jet14 200 Euro4	200	2018	2018	XC20W1-EU	53178ARB000	**184101130**		-	**-**	
Symphony St	200	2015	2015	XB20W1-EU	53178ARB001	**184101130**		53175AAA000	**184121110**	
Symphony St 200 Euro4	200	2017	2017	XB20W2-EU	53178ARB001	**184101130**		-	**-**	
Symphony St 200I Abs Euro4	200	2018	2018	XB20W3-EU	53178ARB000	**184101130**		-	**-**	
Gts	250	2007	2008	LM25W-P	53178HMA000	**184101120**		53175HMA000	**184121090**	
Gts 250	250	2006	2007	LM25W-6	53178HMA000	**184101120**		53175HMA000	**184121090**	
Joymax	250	2005	2007	LM25W-6\LM25W-T	53178HMA000	**184101120**		53175HMA000	**184121090**	
Joymax Euro3 I	250	2007	2008	LM25W1-T	53178HMA000	**184101120**		53175HMA000	**184121090**	
Cruisym 300 Euro4	300	2017	2017	LV30W1-EU	53178HMA000	**184101120**		53175HMA000	**184121090**	
Joymax 300 Z Euro4	300	2019	2019	LW30W1-EU	53178HMA000	**184101120**		53175HMA000	**184121090**	
Joymax Evo	300	2009	2009	LM30W-6	53178HMA000	**184101120**		53175HMA000	**184121090**	
Joymax Evo I	300	2010	2010	LM30W-T	53178HMA000	**184101120**		53175HMA000	**184121090**	
Joymax I	300	2012	2012	LN30W1-T	53178HMA000	**184101120**		53175HMA000	**184121090**	
Joymax I	300	2014	2014	LN30W2-IT	53178HMA000	**184101120**		53175HMA000	**184121090**	
Joymax I Abs	300	2013	2013	LN30W6-IT	53178HMA000	**184101120**		53175HMA000	**184121090**	
Joymax I Abs	300	2014	2014	LN30W8-IT	53178HMA000	**184101120**		53175HMA000	**184121090**	



Modello *Model*	CC	Da *From*	A *To*	Telaio *Frame*	OEM Leva sx *Left Lever OEM Number*	Leva sinistra *Left Lever*	Note leva sinistra *Left Lever Notes*	OEM Leva dx *Right Lever OEM Number*	Leva destra *Right Lever*	Note leva destra *Right Lever Notes*
Joymax I Sport Abs-S&S Euro4	300	2017	2017	LN30WA-EU	53178HMA000	**184101120**		53175HMA000	**184121090**	
YAMAHA										
Bw'S	50	2004	2007	SA231	5JHH39120000	**184100401**		5JHH39220000	**184120481**	
Bw'S	50	2008	2012	SA231	5JHH39121000	**184100010**	Tamburo	5JHH39220000	**184120481**	
Bw'S	50	2008	2012	SA231	5JHH39120000	**184100401**		5JHH39220000	**184120481**	
Bw'S	50	2013	2016	SA231	5JHH39121000	**184100010**		5JHH39220000	**184120481**	
Bw'S Bump	50	1997	1998	4SB	4SBH39120000	**184100161**		4SBH39220000	**184120171**	
Bw'S Easy	50	2013	2013	SA236	5JHH39121000	**184100010**		-	-	
Bw'S Naked	50	2003	2003	SA064	5JHH39120000	**184100401**		5NTH39220000	**184120821**	
Bw'S Naked	50	2004	2004	SA231	5JHH39120000	**184100401**		5JHH39220000	**184120481**	
Bw'S Naked	50	2009	2016	SA231	5JHH39120000	**184100401**		5JHH39220000	**184120481**	
Bw'S Next Generation	50	1997	1998	4SB	4SBH39120000	**184100161**		4SBH39220000	**184120171**	
Bw'S Next Generation	50	1999	2000	SA051	4SBH39121000	**184100421**		4SBH39221000	**184120511**	
Bw'S Next Generation	50	2001	2003	SA051	5JHH39120000	**184100401**		5JHH39220000	**184120481**	
Bw'S Next Generation	50	2004	2006	SA056	5JHH39120000	**184100401**		5JHH39220000	**184120481**	
Bw'S Original	50	1997	1998	3WW\4VV	4KHH39120000	**184100151**		4VVH39220000	**184120161**	
Bw'S Original	50	1999	2000	SA061	4SBH39121000	**184100421**		4VVH39221000	**184120471**	
Bw'S Original	50	2001	2002	SA061	5JHH39120000	**184100401**		5NTH39220000	**184120821**	
Bw'S Original Euro2	50	2003	2003	SA064	5JHH39120000	**184100401**		5NTH39220000	**184120821**	
Bw'S R	50	2001	2001	SA061	5JHH39120000	**184100401**		5NTH39220000	**184120821**	
Cs Jog R	50	2002	2002	SA221	5JHH39120000	**184100401**		5RWH39220000	**184120891**	
Cs Jog R	50	2006	2012	SA22V	5JHH39120000	**184100401**		5RWH39220000	**184120891**	
Cs Jog R	50	2013	2015	SA486	5JHH39120000	**184100401**		5RWH39220000	**184120891**	
Cs Jog R Euro2	50	2002	2005	SA224	5JHH39120000	**184100401**		5RWH39220000	**184120891**	
Ct S	50	1990	1995	3NT6	1NTH39120000	**184100131**		-	-	
Ct Ss	50	1992	1995	3NTC	1NTH39120000	**184100131**		-	-	
Cw Bw'S Original Euro2	50	2002	2002	SA064	5JHH39120000	**184100401**		5NTH39220000	**184120821**	
Cw L Bw'S	50	2003	2003	SA064	5JHH39120000	**184100401**		5NTH39220000	**184120821**	
Cw L Bw'S	50	2004	2004	SA231	5JHH39120000	**184100401**		5JHH39220000	**184120481**	
Cw Rs Spy	50	1995	1998	4UP1\4UP2\4UP4	4SBH39120000	**184100161**		4TDH39220000	**184120181**	
Cw Sp Bw'S Original Euro2	50	2002	2002	SA064	5JHH39120000	**184100401**		5NTH39220000	**184120821**	
Dt R - Dt Rsm	50	2003	2005	70K10\70K1A	-	-		1D4F61650000	**184122230**	
Dt R - Dt X	50	2006	2006	70K10\70K1A	-	-		1D4F61650000	**184122230**	
Ew Slider	50	2000	2002	SA091	5JHH39120000	**184100401**		5JHH39220000	**184120481**	
Pw50	50	1982	1999	4X4	2T4839120100	**184102160**		-	-	
Pw50	50	2004	2011	3PT00	2T4839120200	**184102160**		-	-	
Pw50	50	2013	2018	3PT00	2T4839120300	**184102160**		-	-	
Tzr	50	2003	2006	RA031	5WXH39120000	**184102190**		5WXH39220000	**184122220**	
Tzr	50	2007	2008	RA033	5WXH39120000	**184102190**		5WXH39220000	**184122220**	
Tzr	50	2010	2011	RA033	5D7H39120000	**184102450**		5WXH39220000	**184122220**	
Tzr	50	2012	2012	RA041	5D7H39120100	**184102450**		5WXH39220000	**184122220**	
Tzr Rr	50	2005	2005	RA031	5WXH39120000	**184102190**		5WXH39220000	**184122220**	
Ya R Axis	50	1995	1996	4PC3\4PC6	4KHH39120000	**184100151**		-	-	
Yh Why	50	1998	1998	SA031	5EUH39120000	**184100411**		5EUH39220000	**184120491**	
Yh Why	50	2001	2002	SA03B	5EUH39120000	**184100411**		5EUH39220000	**184120491**	
Yh Why	50	2006	2006	SA03E	5EUH39120000	**184100411**		5EUH39220000	**184120491**	
Yh Why Euro1	50	1999	2000	SA031	5EUH39120000	**184100411**		5EUH39220000	**184120491**	
Yh Why Euro2	50	2003	2005	SA03E	5EUH39120000	**184100411**		5EUH39220000	**184120491**	
Ym Breeze	50	1994	1995	4KH1\4KH3	4KHH39120000	**184100151**		2NA839220100	**184120151**	
Yn F Neo'S 4	50	2009	2010	SA401	5JHH39121000	**184100010**		-	-	
Yn F Neo'S 4	50	2012	2015	SA461	5JHH39121000	**184100010**		-	-	
Yn F Neo'S 4	50	2018	2018	SA461	5JHH39121000	**184100010**		-	-	
Yn Neo'S	50	2004	2006	SA211	5ADH39120200	**184100141**		5ADH39220100	**184120401**	



LEVE

LEVERS

Modello *Model*	**CC**	**Da** *From*	**A** *To*	**Telaio** *Frame*	**OEM Leva sx** *Left Lever OEM Number*	**Leva sinistra** *Left Lever*	**Note leva sinistra** *Left Lever Notes*	**OEM Leva dx** *Right Lever OEM Number*	**Leva destra** *Right Lever*	**Note leva destra** *Right Lever Notes*
Yn Neo'S	50	2007	2012	SA341	5JHH39121000	**184100010**		-	-	
Yn Neo'S	50	2012	2016	SA451	5JHH39121000	**184100010**		-	-	
Yn Neo'S Easy	50	2013	2013	SA457	5JHH39121000	**184100010**		-	-	
Yn Neo'S Euro2	50	2002	2003	SA211	5ADH39120200	**184100141**		5ADH39220100	**184120401**	
Yn R Neo'S	50	1997	2001	5AD\SA151	5ADH39120200	**184100141**		5ADH39220100	**184120401**	
Yn R Neo'S	50	2002	2002	SA151	5ADH39120200	**184100141**		5ADH39220100	**184120401**	
Yq Aerox	50	1997	1998	5BR\5BR00	5BRH39120000	**184120391**		5BRH39120000	**184120391**	
Yq Aerox	50	2001	2002	SA141	5BRH39120100	**184120391**		5BRH39120100	**184120391**	
Yq Aerox	50	2004	2008	SA144	5BRH39120100	**184120391**		5BRH39120100	**184120391**	
Yq Aerox	50	2009	2012	SA144	3C6H39120000	**184120841**		3C6H39120000	**184120841**	
Yq Aerox R	50	1999	2000	5BR00	5BRH39120100	**184120391**		5BRH39120100	**184120391**	
Yq L Aerox Euro2	50	2003	2003	SA144	5BRH39120100	**184120391**		5BRH39120100	**184120391**	
Bw'S	100	1999	2001	SB021	4VPH39121000	**184100801**		-	-	
Yn Neo'S	100	1999	2002	SB041	5ADH39120200	**184100141**		5ADH39220100	**184120401**	
Dt125R	125	1989	1992	3PY1\2\3\4	3FY839120100	**184102110**		3FY839220000	**184122470**	
Nxc Cygnus X	125	2004	2006	SE081	5MLH39120000	**184100781**		5MLH39220000	**184120871**	
Nxc Cygnus X	125	2007	2011	SE411	5MLH39120000	**184100781**		5MLH39220000	**184120871**	
Tdr	125	1989	1990	3SH1\3XD0	3FY839120100	**184102110**		-	-	
Tdr	125	1991	1993	3SH1\3SH3\3XD1	3FY839120100	**184102110**		-	-	
Tdr125R	125	1993	1994	3SH2\3XE2	3FY839120100	**184102110**		-	-	
Vp X-City	125	2008	2011	SE431	1B9H39220000	**184100621**		1B9H39120000	**184120751**	
Wr125R	125	2009	2011	DE071	5D7H39120000	**184102450**		5D7H39220000	**184122070**	
Wr125X	125	2009	2011	DE072	5D7H39120000	**184102450**		5D7H39220000	**184122070**	
Wr125X	125	2013	2014	DE072	5D7H39120100	**184102450**		-	-	
Xn Teo'S	125	2000	2000	SE041	5DSH39120100	**184100491**		5DSH39220100	**184120601**	Brembo
Xn Teo'S	125	2000	2000	SE041	5DSH39220100	**184120601**	Brembo	5DSH39220100	**184120601**	Brembo
Xq Maxster	125	2001	2002	SE051	5DSH39220100	**184120601**	Brembo	5DSH39220100	**184120601**	Brembo
Xt125R	125	2005	2005	7401A	-	**-**		1D4F61650000	**184122230**	
Xt125R	125	2006	2006	7401A	3D6H39120000	**184102510**		1D4F61650000	**184122230**	
Xt125R	125	2007	2007	7401E	3D6H39120000	**184102510**		-	-	
Xt125R	125	2007	2008	7401G	3D6H39120000	**184102510**		-	-	
Xt125X	125	2005	2005	7401B	-	**-**		1D4F61650000	**184122230**	
Xt125X	125	2006	2006	7401B	3D6H39120000	**184102510**		1D4F61650000	**184122230**	
Xt125X	125	2007	2007	13D4	3D6H39120000	**184102510**		-	-	
Xt125X	125	2007	2007	7401F	3D6H39120000	**184102510**		-	-	
Xt125X	125	2008	2008	7401H	3D6H39120000	**184102510**		-	-	
Yp125 Majesty	125	1998	2000	SE021	5DSH39120100	**184100491**		5DSH39220100	**184120601**	Brembo
Yp125 Majesty	125	1998	2000	SE021	5DSH39220100	**184120601**	Brembo	5DSH39220100	**184120601**	Brembo
Yp125 Majesty	125	2001	2002	SE061	5DSH39220100	**184120601**	Brembo	5DSH39220100	**184120601**	Brembo
Yp125E Majesty	125	2003	2006	SE066	5DSH39220100	**184120601**	Brembo	5DSH39220100	**184120601**	Brembo
Yp125E Majesty	125	2007	2009	SE068	5DSH39220100	**184120601**	Brembo	5DSH39220100	**184120601**	Brembo
Yp125R X-Max	125	2006	2009	SE321	1B9H39220000	**184100621**		1B9H39120000	**184120751**	
Yp125R X-Max	125	2010	2012	SE541	1B9H39220000	**184100621**		1B9H39120000	**184120751**	
Yp125R X-Max	125	2012	2016	-	1B9H39220000	**184100621**		1B9H39120000	**184120751**	
Yp125R X-Max Abs	125	2011	2011	SE544	1B9H39220000	**184100621**		1B9H39120000	**184120751**	
Yp125Ra X-Max Abs	125	2013	2013	SE644	1B9H39220000	**184100621**		1B9H39120000	**184120751**	
Yp125Ra X-Max Abs	125	2014	2016	SE684	1B9H39220000	**184100621**		1B9H39120000	**184120751**	
Yp125Ra X-Max Abs	125	2017	2017	SEC31	1B9H39220000	**184100621**		1B9H39120000	**184120751**	
Yw Bw'S	125	2010	2010	SE551	4VPH39121000	**184100801**		-	-	
Yz125Lc	125	2000	2000	CE05C	5HD839120000	**184102090**		4SS839220100	**184122090**	
Yzf-R125	125	2008	2011	RE061	5D7H39120000	**184102450**		5D7H39220000	**184122070**	
Xn Teo'S	150	2001	2002	SG071	5DSH39120100	**184100491**		5DSH39220100	**184120601**	Brembo
Xn Teo'S	150	2001	2002	SG071	5DSH39220100	**184120601**	Brembo	5DSH39220100	**184120601**	Brembo
Xq Maxster	150	2001	2002	SG061	5DSH39220100	**184120601**	Brembo	5DSH39220100	**184120601**	Brembo
Yp150 Majesty	150	2000	2000	SG051	5DSH39120100	**184100491**		5DSH39220100	**184120601**	Brembo
Yp150 Majesty	150	2000	2000	SG051	5DSH39220100	**184120601**	Brembo	5DSH39220100	**184120601**	Brembo
Yp150 Majesty	150	2001	2002	SG081	5DSH39220100	**184120601**	Brembo	5DSH39220100	**184120601**	Brembo
Yp180E Majesty	180	2003	2006	SG121	5DSH39220100	**184120601**	Brembo	5DSH39220100	**184120601**	Brembo



Modello *Model*	CC	Da *From*	A *To*	Telaio *Frame*	OEM Leva sx *Left Lever OEM Number*	Leva sinistra *Left Lever*	Note leva sinistra *Left Lever Notes*	OEM Leva dx *Right Lever OEM Number*	Leva destra *Right Lever*	Note leva destra *Right Lever Notes*
Sr Classic	250	1996	1996	21L2	21LH39121000	**184102020**		-	-	
Vp X-City	250	2007	2008	SG191	1B9H39220000	**184100621**		1B9H39120000	**184120751**	
Vp X-City	250	2009	2012	SG192\SG194	1B9H39220000	**184100621**		1B9H39120000	**184120751**	
Vp X-City	250	2013	2015	SG194	1B9H39220000	**184100621**		1B9H39120000	**184120751**	
Wr250F	250	2003	2004	CG16W\CG163	5TJ839120000	**184102170**		5MV839220000	**184122130**	
Wr250F	250	2005	2005	CG22W\CG223	5TJ839128000	**184102370**		5MV839220000	**184122130**	
Wr250F	250	2006	2006	CG24W\CG24Y	5TJ839128000	**184102370**		1C3839225000	**184122130**	
Wr250F	250	2007	2007	CG26W	5TJ839128000	**184102370**		1C3839225000	**184122130**	
Wr250F	250	2008	2011	CG30W	5TJ839128000	**184102370**		1C3839225000	**184122130**	
Wr250F	250	2015	2017	WRE251	5TJ839128200	**184102370**		1C3839225100	**184122130**	
Wr250F	250	2018	2018	-	5TJ839128200	**184102370**		-	-	
Yp250 Majesty	250	2000	2001	SG041	5CG839121100	**184100501**		5CG839220100	**184120611**	
Yp250 Majesty	250	2002	2003	SG048	5CG839121100	**184100501**		5CG839220100	**184120611**	
Yp250 Majesty Abs	250	2003	2003	SG04B	5CG839121100	**184100501**		5CG839220100	**184120611**	
Yp250 Majesty Dx	250	1998	1999	SG021\SG022	5CG839121100	**184100501**		5CG839220100	**184120611**	
Yp250R Black X-Max	250	2009	2009	SG162	1B9H39220000	**184100621**		1B9H39120000	**184120751**	
Yp250R X-Max	250	2005	2006	SG161	1B9H39220000	**184100621**		1B9H39120000	**184120751**	
Yp250R X-Max	250	2007	2009	SG162	1B9H39220000	**184100621**		1B9H39120000	**184120751**	
Yp250R X-Max	250	2010	2012	SG221	1B9H39220000	**184100621**		1B9H39120000	**184120751**	
Yp250R X-Max	250	2012	2013	SG251	1B9H39220000	**184100621**		1B9H39120000	**184120751**	
Yp250R X-Max	250	2014	2016	SG261	1B9H39220000	**184100621**		1B9H39120000	**184120751**	
Yp250R X-Max Sport	250	2011	2012	SG224	1B9H39220000	**184100621**		1B9H39120000	**184120751**	
Yp250Ra X-Max Abs	250	2011	2012	SG222	1B9H39220000	**184100621**		1B9H39120000	**184120751**	
Yp250Ra X-Max Abs	250	2012	2013	SG252	1B9H39220000	**184100621**		1B9H39120000	**184120751**	
Yp250Ra X-Max Abs	250	2014	2015	SG262	1B9H39220000	**184100621**		1B9H39120000	**184120751**	
Yp250Ra X-Max Abs	250	2016	2016	SG262\SG266	1B9H39220000	**184100621**		1B9H39120000	**184120751**	
Yz250F	250	2007	2007	CG27C	-	-		5XC83922G000	**184122350**	
Yz250Lc	250	2000	2000	CG08C	5HD839120000	**184102090**		4SS839220100	**184122090**	
Xc Versity	300	2006	2006	SH014	5DSH39220100	**184120601**	Brembo	5DSH39220100	**184120601**	Brembo
Rd Lc	350	1991	1991	4CE	-	-		36Y839220000	**184122200**	
Rd Lcf	350	1986	1986	1WT	-	-		36Y839220000	**184122200**	
Wr400F	400	2000	2000	5GS5\6\7\8	5HD839120000	**184102090**		4SS839220100	**184122090**	
Yp400 Majesty	400	2004	2005	SH021\4\SH025\6	5GJ839120000	**184100561**		5GJ839220000	**184120561**	
Yp400 Majesty	400	2006	2006	SH025\SH026	5GJ839120000	**184100561**		5GJ839220000	**184120561**	
Yp400 Majesty	400	2007	2008	SH051\SH052	5GJ839120000	**184100561**		5GJ839220000	**184120561**	
Yp400 Majesty	400	2009	2011	SH055\SH056\SH057	4B5839120000	**184100791**		4B5839220000	**184120851**	
Yp400 Majesty Abs	400	2007	2008	SH054	5GJ839120000	**184100561**		5GJ839220000	**184120561**	
Yp400 Majesty Abs	400	2009	2011	SH056\SH059	4B5839120000	**184100791**		4B5839220000	**184120851**	
Yp400R X-Max	400	2013	2016	SH071	1SDH39220000	**184101051**		1SDH39120000	**184121011**	
Yp400R X-Max Momodesign	400	2014	2014	SH071	1SDH39220000	**184101051**		1SDH39120000	**184121011**	
Yp400Ra X-Max	400	2018	2019	SH121	1SDH39220000	**184101051**		1SDH39120000	**184121011**	
Yp400Ra X-Max Abs	400	2014	2017	SH072	1SDH39220000	**184101051**		1SDH39120000	**184121011**	
Yp400Ra X-Max Ironmax Abs	400	2016	2016	SH072	1SDH39220000	**184101051**		1SDH39120000	**184121011**	
Yp400Ra X-Max Momodesign Abs	400	2014	2014	SH076	1SDH39220000	**184101051**		1SDH39120000	**184121011**	
Yz426F	426	2000	2001	CJ01C	5HD839120000	**184102090**		4SS839220100	**184122090**	
Wr450F	450	2003	2004	CJ04W	5TJ839120000	**184102170**		5MV839220000	**184122130**	
Wr450F	450	2005	2005	CJ07W	5TJ839128000	**184102370**		5MV839220000	**184122130**	
Wr450F	450	2006	2011	-	5TJ839128000	**184102370**		1C3839225000	**184122130**	
Wr450F	450	2012	2012	DJ031	5TJ839128100	**184102370**		-	-	
Wr450F	450	2013	2013	DJ031	5TJ839128100	**184102370**		1C3839225100	**184122130**	
Wr450F	450	2014	2014	DJ031	5TJ839128100	**184102370**		-	-	
Wr450F	450	2016	2017	WRE45\CJ19W	5TJ839128200	**184102370**		-	-	
Wr450F	450	2018	2018	-	5TJ839128200	**184102370**		-	-	
Rd	500	1984	1984	47X	-	-		36Y839220000	**184122200**	
Xp T-Max	500	2001	2003	SJ011\4\5\6	5GJ839120000	**184100561**		5GJ839220000	**184120561**	



LEVE

LEVERS

Modello *Model*	**CC**	**Da** *From*	**A** *To*	**Telaio** *Frame*	**OEM Leva sx** *Left Lever OEM Number*	**Leva sinistra** *Left Lever*	**Note leva sinistra** *Left Lever Notes*	**OEM Leva dx** *Right Lever OEM Number*	**Leva destra** *Right Lever*	**Note leva destra** *Right Lever Notes*
Xp T-Max	500	2004	2006	SJ031\SJ032	5GJ839120000	**184100561**		5GJ839220000	**184120561**	
Xp T-Max	500	2007	2007	SJ051\SJ032	5GJ839120000	**184100561**		5GJ839220000	**184120561**	
Xp T-Max	500	2008	2011	SJ061\SJ062	4B5839120000	**184100791**		4B5839220000	**184120851**	
Xp T-Max Abs	500	2005	2006	SJ034	5GJ839120000	**184100561**		5GJ839220000	**184120561**	
Xp T-Max Abs	500	2007	2007	SJ052	5GJ839120000	**184100561**		5GJ839220000	**184120561**	
Xp T-Max Abs	500	2008	2011	SJ064	4B5839120000	**184100791**		4B5839220000	**184120851**	
Xp T-Max Abs Sv	500	2010	2011	SJ064	4B5839120000	**184100791**		4B5839220000	**184120851**	
Xp T-Max Black Max	500	2006	2006	SJ031	5GJ839120000	**184100561**		5GJ839220000	**184120561**	
Xp T-Max Black Max-Night Max	500	2007	2007	SJ051	5GJ839120000	**184100561**		5GJ839220000	**184120561**	
Xp T-Max Sv	500	2011	2011	SJ061	4B5839120000	**184100791**		4B5839220000	**184120851**	
Xp T-Max White Max	500	2010	2010	SJ061\SJ062	4B5839120000	**184100791**		4B5839220000	**184120851**	
Xp T-Max	530	2012	2014	SJ091	4B5839120000	**184100791**		4B5839220000	**184120851**	
Xp T-Max Abs	530	2012	2014	SJ092	4B5839120000	**184100791**		4B5839220000	**184120851**	
Xp T-Max Sp	530	2015	2015	SJ098	4B5839120000	**184100791**		4B5839220000	**184120851**	
Xp T-Max Sp Abs	530	2015	2016	SJ099	4B5839120000	**184100791**		4B5839220000	**184120851**	
Xt	550	1982	1983	5Y3	3FY839120100	**184102110**		-	-	
Srx	600	1986	1987	1XL	-	-		36Y839220000	**184122200**	
Xj N	600	1995	1997	4KE\4BR	-	-		3YX839220900	**184122190**	
Xj N	600	1999	2001	4KE	-	-		3YX839220900	**184122190**	
Xj S Diversion	600	1992	2002	-	-	-		3YX839220900	**184122190**	
Xt	600	1984	1986	43F	3FY839120100	**184102110**		3FY839220000	**184122470**	
Xt	600	1987	1988	2KF	3FY839120100	**184102110**		3YR839220000	**184122240**	
Xt	600	1989	1990	3PW1\3PX1\2WK2	3FY839120100	**184102110**		3YR839220000	**184122240**	
Xt E	600	1990	2002	-	3FY839120100	**184102110**		3YR839220000	**184122240**	
Xt K	600	1991	1993	3YP1	3FY839120100	**184102110**		3YR839220000	**184122240**	
Xt Z Tenere	600	1983	1985	34L\50T\55W	3FY839120100	**184102110**		3FY839220000	**184122470**	
Xt Z Tenere	600	1986	1990	1VJ	3FY839120100	**184102110**		3YR839220000	**184122240**	
Xvs A Drag Star Classic	650	1998	2002	VM035	5BN839120000	**184102200**		-	-	
Xvs A Drag Star Classic	650	2004	2006	VM041	5BN839120000	**184102200**		-	-	
Xvs Drag Star	650	1997	1999	4VR00\4VR00	4TR839120000	**184102200**		-	-	
Xvs Drag Star	650	2000	2002	VM031\VM032\VM031\ VM032	4TR839120000	**184102200**		-	-	
Xt660R	660	2004	2011	-	3FY839120100	**184102110**		-	-	
Xt660R	660	2014	2014	DM018	3FY839120100	**184102110**		-	-	
Xt660X	660	2004	2011	-	3FY839120100	**184102110**		-	-	
Xt660X	660	2014	2014	DM01B	3FY839120100	**184102110**		-	-	
Xt660Z Tenere	660	1991	1996	3YF\4BW	3FY839120100	**184102110**		3FY839220000	**184122470**	
Fz	750	1986	1986	1FN	1AE839120000	**184102530**		36Y839220000	**184122200**	
Fz	750	1987	1987	2MG	1AE839120000	**184102530**		36Y839220000	**184122200**	
Fz	750	1989	1989	3KS1\3KS2\3KT1	1AE839120000	**184102530**		36Y839220000	**184122200**	
Fz	750	1990	1990	3KS3\3KT2\3KU2	1AE839120000	**184102530**		36Y839220000	**184122200**	
Fzx	750	1988	1988	2JE	1AE839120000	**184102530**		36Y839220000	**184122200**	
Xtz Super Tenere	750	1989	1995	-	3FY839120100	**184102110**		3FY839220000	**184122470**	
Yzf R	750	1993	1996	-	4FM839120100	**184102130**		-	-	
Yzf R7 Ow02	750	1999	2000	RM011	4FM839120100	**184102130**		-	-	
Yzf Sp	750	1993	1995	4HS1	4FM839120100	**184102130**		-	-	
Tdm	850	1991	2001	-	-	-		3YX839220900	**184122190**	
Xj S Diversion	900	1995	2001	-	-	-		3YX839220900	**184122190**	
Fz1	1000	2006	2009	RN165\RN166\RN167	4XV839121100	**184102000**		5VS839220000	**184122340**	
Fz1 Fazer	1000	2006	2006	RN161\RN162\RN163	4XV839121100	**184102000**		5VS839220000	**184122340**	
Fz1 Fazer	1000	2007	2008	RN161\RN162\RN164	4XV839121100	**184102000**		-	-	
Fz1 Fazer	1000	2009	2010	RN161\RN162\RN164	4XV839121100	**184102000**		5VS839220000	**184122340**	
Fz1 Fazer	1000	2011	2012	RN16D	4XV839121100	**184102000**		5VS839220000	**184122340**	
Fz1 Fazer Abs	1000	2007	2012	RN168\RN169	4XV839121100	**184102000**		5VS839220000	**184122340**	
Fz1-N	1000	2011	2011	RN16H	4XV839121100	**184102000**		5VS839220000	**184122340**	
Fz1-Na	1000	2010	2011	RN16R	4XV839121100	**184102000**		5VS839220000	**184122340**	



Modello *Model*	CC	Da *From*	A *To*	Telaio *Frame*	OEM Leva sx *Left Lever OEM Number*	Leva sinistra *Left Lever*	Note leva sinistra *Left Lever Notes*	OEM Leva dx *Right Lever OEM Number*	Leva destra *Right Lever*	Note leva destra *Right Lever Notes*
Fzr	1000	1987	1988	2GH	1AE839120000	**184102530**		36Y839220000	**184122200**	
Fzs Fazer	1000	2001	2003	RN061\RN066	4XV839121100	**184102000**		-	**-**	
Fzs Fazer	1000	2004	2005	RN066\RN141	4XV839121100	**184102000**		-	**-**	
Gts	1000	1993	1993	4BH	-	**-**		3YX839220900	**184122190**	
Gts A (Abs)	1000	1993	1993	4FE1\4FV2	-	**-**		3YX839220900	**184122190**	
Yzf-R1	1000	1998	2003	-	4XV839121100	**184102000**		-	**-**	
Yzf-R1	1000	2004	2005	RN121\RN124	4XV839121100	**184102000**		5VY839220000	**184122320**	
Yzf-R1	1000	2006	2006	RN126\RN127	4XV839121100	**184102000**		5VY839220000	**184122320**	
Yzf-R1	1000	2007	2007	RN191	4XV839121100	**184102000**		-	**-**	
Yzf-R1	1000	2008	2008	RN191\RN192	4XV839121100	**184102000**		-	**-**	
Yzf-R1Sp	1000	2006	2006	RN129	4XV839121100	**184102000**		5VY839220000	**184122320**	
Bt Bulldog	1100	2002	2004	RP051	5JNH39120000	**184102190**		3TJ839220100	**184122160**	
Bt Bulldog	1100	2005	2006	RP052	5JNH39120000	**184102190**		5VS839220000	**184122340**	
Xvs A Drag Star Classic	1100	2000	2003	VP161	5BN839120000	**184102200**		-	**-**	
Xvs A Drag Star Classic	1100	2005	2006	VP161	5BN839120000	**184102200**		-	**-**	
Xvs Drag Star	1100	1999	2000	5EL\5EL	4TR839120000	**184102200**		-	**-**	
Xvs Drag Star	1100	2001	2002	VP057\VP057	4TR839120000	**184102200**		-	**-**	
Fj	1200	1986	1991	-	1AE839120000	**184102530**		36Y839220000	**184122200**	
Fj A (Abs)	1200	1991	1991	3XW	1AE839120000	**184102530**		36Y839220000	**184122200**	
Xjr1300 - Xjr1300Sp	1300	1999	2001	RP021\RP022\RP024	4FM839120100	**184102130**		3TJ839220100	**184122160**	



LEVE SINISTRE - *LEFT HAND LEVERS*

184100010

MBK: R.O. 3VLH39120000
YAMAHA: R.O. 5JHH39121000



184100021

APRILIA: R.O. AP8218153



184100031

APRILIA: R.O. AP8213279



184100041

APRILIA: R.O. AP8218176



184100051

APRILIA: R.O. AP8218329



184100061

APRILIA: R.O. AP8218274



184100071

APRILIA: R.O. AP8118461



184100111

GILERA: R.O. 564689
PIAGGIO: R.O. 564689



184100131

MBK: R.O. 1NTH39120000
YAMAHA: R.O. 1NTH39120000



184100141

MBK: R.O. 5ADH39120200
YAMAHA: R.O. 5ADH39120200



184100151

MBK: R.O. 4KHH39120000
YAMAHA: R.O. 4KHH39120000



184100161

MBK: R.O. 4SBH39120000
YAMAHA: R.O. 4SBH39120000





184100170

PIAGGIO: R.O. 269070



184100201

PIAGGIO: R.O. 564642



184100211

PIAGGIO: R.O. 165279



184100212

PIAGGIO: R.O. 070578



184100250

PIAGGIO



184100251

PIAGGIO: R.O. 138336-2425314



184100261

PIAGGIO



184100300

PIAGGIO: R.O. 268015



184100310

PIAGGIO: R.O. 228967-242648



184100341

HONDA: R.O. 53178GW2900



184100361

MALAGUTI: R.O. 12113303



184100371

HONDA: R.O. 53178GCG930





LEVE

LEVERS

184100381

HONDA



184100391

HONDA



184100401

MBK: R.O. 5JHH39120000
YAMAHA: R.O. 5JHH39120000



184100411

MBK: R.O. 5EUH39120000
YAMAHA: R.O. 5EUH39120000



184100421

MBK: R.O. 4SBH39121000
YAMAHA: R.O. 4SBH39121000



184100431 NEW

PIAGGIO: R.O. 165279



184100441

HONDA: R.O. 53178-GCS-000



184100451

HONDA: R.O. 53178-KFG-006



184100461

KYMCO: R.O. 00153984



184100471

KYMCO: R.O. 00153977-00153974



184100481

KYMCO: R.O. 00152161-00152163-00152050
SYM: R.O. 5317AGAKV00



184100491

MBK: R.O. 5DSH39120100
YAMAHA: R.O. 5DSH39120100





184100501

MBK: R.O. 5CG839121100
YAMAHA: R.O. 5CG839121100



184100521

SUZUKI: R.O. 57500-14F00-000



184100531

GILERA: R.O. 564682
PIAGGIO: R.O. 564682



184100541

KYMCO: R.O. 00153372-00153782



184100561

YAMAHA: R.O. 5GJ839120000



184100571

APRILIA: R.O. AP8213601
DERBI: R.O. AP8213601



184100581

APRILIA: R.O. AP8590035
DERBI: R.O. AP8590035



184100601

DERBI: R.O. 564683
GILERA: R.O. 564683
PIAGGIO: R.O. 564683



184100611

HONDA: R.O. 53178MCT006



184100621

YAMAHA: R.O. 1B9H39220000



184100631

MALAGUTI: R.O. 12114203



184100641

MALAGUTI: R.O. 12121103





LEVE

LEVERS

184100651

MALAGUTI: R.O. 12120903



184100661

MALAGUTI: R.O. 12119803



184100671

MALAGUTI: R.O: 12120703



184100711

KYMCO: R.O. 00152580



184100721

KYMCO: R.O. 00153308



184100731

PIAGGIO: R.O. 648083



184100741

KYMCO: R.O. 00153759-00153902-00153290



184100751

KYMCO: R.O. 00155603-00153414



184100761

KYMCO: R.O. 00153298



184100771

APRILIA: R.O. AP8133809



184100781

YAMAHA: R.O: 5MLH39120000



184100791

YAMAHA: R.O. 4B5839120000





184100801

MBK: R.O. 4VPH39121000
YAMAHA: R.O. 4VPH39121000



184100821

PIAGGIO: R.O. 648115



184100851

GILERA: R.O. 497172-647552



184100861

APRILIA: R.O. 564681
DERBI: R.O. 564681
PIAGGIO: R.O. 564681



184100881

PIAGGIO: R.O. 147319



184100891

PIAGGIO: R.O. 033882



184100901

PIAGGIO: R.O. 120487



184100911

PIAGGIO: R.O. 2425314



184100941

PIAGGIO: R.O. 610285M



184100961

PIAGGIO: R.O. 265948



184100971

PIAGGIO



184101001

APRILIA: R.O. AP8218495





LEVE

LEVERS

184101051

YAMAHA: R.O. 1SDH39120000



184101060

PIAGGIO: R.O. 156378



184101100

PIAGGIO: R.O. 178582



184101110 NEW

SYM: R.O. 53178HHW000



184101120 NEW

SYM: R.O. 53178HMA000



184101130 NEW

SYM: R.O. 53178ARB000



184102000

APRILIA: R.O. 893926



184102010

APRILIA: R.O. 00H00904291
DERBI: R.O. 00H00904291
GILERA: R.O. 00H00904291
SUZUKI: R.O. 57621-33E00-000



184102020

YAMAHA: R.O. 21LH39121000





184102030

SUZUKI: R.O. 57621-38A02-000



184102040

DERBI: R.O. 00H00903291



184102050

CAGIVA: R.O. 00F00910291
DERBI: R.O. 00F00910291
GILERA: R.O. 00F00910291



184102060

HONDA: R.O. 53178MAC740



184102070

HONDA: R.O. 53178MAN600-53178MG7003



184102080

APRILIA: R.O. AP8218326
CAGIVA: R.O. 8AA067163
HUSQVARNA: R.O. 800089813



184102090

YAMAHA: R.O. 5HD839120000



184102100

KAWASAKI: R.O. 460921162-460920031



184102110

YAMAHA: R.O. 3FY839120100



184102120

SUZUKI: R.O. 57500-24F10-000



184102130

HONDA: R.O. 53175GR2010
KAWASAKI: R.O. 132361282
SUZUKI: R.O. 57620-10F00-000
YAMAHA: R.O. 4FM839120100



184102140

KAWASAKI: R.O. 132361186





184102150

HONDA: R.O. 53178KV3000



184102160

YAMAHA: R.O. 2T4839120100



184102170

YAMAHA: R.O. 5TJ839120000



184102180

SUZUKI: R.O. 57620-38C00-000



184102190

YAMAHA: R.O. 5WXH39120000



184102200

KAWASAKI: R.O. 460921164
SUZUKI: R.O. 57620-24B01-000
YAMAHA: R.O.5BN839120000



184102210

KAWASAKI: R.O. 460921161



184102220

HONDA: R.O. 53178MM5006



184102230

HONDA: R.O. 53180MCF006



184102240

GAS GAS: R.O. E200701



184102250

BETA: R.O. 2127085000
GAS GAS: R.O. BT27922040
SHERCO: R.O. 2127085000



184102260

HONDA: R.O. 53178-MGF-D01





184102270

HONDA: R.O. 53180MEJ006



184102280

APRILIA: R.O. AP8133667
BENELLI: R.O. R301565002000
DUCATI: R.O. 63140171A
MOTO GUZZI: R.O. AP8133667
MOTO MORINI: R.O. R2131041



184102290

DUCATI: R.O. 63140341A-62610131A



184102300

APRILIA: R.O. AP8113758-AP8118659-AP8118718
DUCATI: R.O. 62640351A
MOTO GUZZI: R.O. 981046-AP8118659
MOTO MORINI: R.O. M13200008400



184102310

HUSABERG: R.O. 59002031000
HUSQVARNA: R.O. 8000A0911-8000A2837
KTM: R.O. 59002031000



184102330

HUSABERG
KTM: R.O. 54602031000



184102360

BETA
HUSABERG: R.O. 54802031000
KTM: R.O. 54802031000



184102370

YAMAHA: R.O. 5TJ839128000



184102380

DUCATI: R.O. 62640071C-62610031D





LEVE

LEVERS

184102390

SUZUKI: R.O. 57621-38G00-000



184102400

KAWASAKI: R.O. 460921211-460920003



184102410

KAWASAKI: R.O. 460920006



184102420

KAWASAKI: R.O. 460921206-460920050-460921181



184102430

DAELIM: R.O. 53178BA79500



184102440

HONDA: R.O. 53190443610



184102450

YAMAHA: R.O. 5D7H39120000-5D7H39120100



184102470

HONDA: R.O. 53178KWN930



184102480

HARLEY DAVIDSON: R.O 4694507A



184102490

KEEWAY: R.O. 40002BM0T000



184102500

SUZUKI: R.O. 57621-13E00-000



184102510 NEW

APRILIA: R.O. AP8218076
BMW
CAGIVA: R.O. 8A0047820
GILERA: R.O. 951633
YAMAHA: R.O. 3D6H39120000





184102520 NEW

HONDA: R.O. 53178KV0000



184102530 NEW

YAMAHA: R.O. 1AE839120000



184102540 NEW

GAS GAS: R.O. BT280222040



184102550 NEW

BMW: R.O. 32727692857



184122480

HYOSUNG: R.O. 57620HN9100



LEVE DESTRE - *RIGHT HAND LEVERS*

184120010

APRILIA: R.O. AP8218189
MBK: R.O. 3VLH39220000



184120021

APRILIA: R.O. AP8218273-AP8218156



184120051

APRILIA: R.O. AP8218273



184120061

APRILIA: R.O. AP8218288-AP8213284



184120091

GILERA: R.O. 564690
PIAGGIO: R.O. 564690



184120101

GILERA: R.O. 271449
PIAGGIO: R.O. 271449





LEVE

LEVERS

184120111

GILERA: R.O. 494952
PIAGGIO: R.O. 494952



184120151

MBK: R.O. 2NA839220100
YAMAHA: R.O. 2NA839220100



184120161

YAMAHA: R.O. 4VVH39220000



184120171

MBK: R.O. 4SBH39220000
YAMAHA: R.O. 4SBH39220000



184120181

MBK: R.O. 4TDH39220000
YAMAHA: R.O. 4TDH39220000



184120231

GILERA: R.O. 494951
PIAGGIO: R.O. 494951



184120261

PIAGGIO: R.O. 494948



184120281

PIAGGIO: R.O. 265947



184120291

PIAGGIO: R.O. 274547





184120330

PIAGGIO: R.O. 268014



184120391

MBK: R.O. 5BRH39120100
YAMAHA: R.O. 5BRH39120000-5BRH39120100



184120401

MBK: R.O. 5ADH39220100
YAMAHA: R.O. 5ADH39220100



184120411

MALAGUTI: R.O. 12110703-12113203



184120421

HONDA: R.O. 53175-GCG-930



184120431

HONDA



184120441

HONDA: R.O. 53175GAV700



184120461

KYMCO: R.O. 00156915



184120471

MBK: R.O. 4VVH39221000
YAMAHA: R.O: 4VVH39221000





LEVE

LEVERS

184120481

MBK: R.O. 5JHH39220000
YAMAHA: R.O. 5JHH39220000



184120481

YAMAHA: R.O. 3C6H39120000



184120491

MBK: R.O. 5EUH39220000
YAMAHA: R.O. 5EUH39220000



184120501

APRILIA: R.O. AP8218549



184120511

MBK: R.O. 4SBH39221000
YAMAHA: R.O: 4SBH39221000



184120521

APRILIA: R.O. AP8118542



184120531

APRILIA: R.O. AP8218480
PIAGGIO: R.O. 600829



184120541

HONDA: R.O. 53175GCS006



184120551

HONDA: R.O. 53175KAB000



184120561

YAMAHA: R.O. 5GJ839220000



184120571

KYMCO: R.O. 00153960



184120581

KYMCO: R.O. 00153586-00153159





184120591

MALAGUTI: R.O. 12114303-12118103



184120601

GILERA: R.O. 497031-646829
MBK: R.O. 5DSH39220100
PIAGGIO: R.O. 497031-646829
YAMAHA: R.O. 5DSH39220100



184120611

MBK: R.O. 5CG839220100
YAMAHA: R.O. 5CG839220100



184120621

SUZUKI: R.O. 57421-29C00-000



184120631

SUZUKI: R.O. 57421-14F00-000



184120641

PIAGGIO: R.O. 497039



184120651

APRILIA: R.O. 497041-646832
DERBI: R.O. 497041
PIAGGIO: R.O. 497041-646832



184120661

APRILIA: R.O. 600475
GILERA: R.O. 600475
PIAGGIO: R.O. 600475-497170



184120671

PEUGEOT: R.O. 752868
SACHS



184120681

KYMCO: R.O. 00153760-00153360



184120691

PEUGEOT: R.O. 757025
SACHS



184120701

PEUGEOT: R.O. 752864
SACHS





LEVE

LEVERS

184120711

GILERA: R.O. 497042
PIAGGIO: R.O. 646833-497042
DERBI: R.O. 646833-497042



184120731

DERBI: R.O. 646803
PIAGGIO: R.O. 646803-494891



184120741

HONDA: R.O. 53175KM9006



184120751

YAMAHA: R.O. 1B9H39120000



184120761

KYMCO: R.O. 00153413-00154203



184120771

MALAGUTI: R.O. 12121003



184120781

MALAGUTI: R.O. 12119703



184120791

PIAGGIO: R.O. 494804



184120801

KYMCO: R.O. 00153297



184120821

MBK: R.O. 5NTH39220000
YAMAHA: R.O. 5NTH39220000



184120841

YAMAHA: R.O. 3C6H39120000



184120851

YAMAHA: R.O. 4B5839220000





184120871

YAMAHA: R.O. 5MLH39220000



184120891

MBK: R.O. 5RWH39220000
YAMAHA: R.O. 5RWH39220000



184120921

PIAGGIO: R.O. 649196



184120931

APRILIA: R.O. AP8218640



184120941

APRILIA: R.O. AP8218481-AP8218482



184120971

APRILIA: R.O. AP8213597



184121001

PIAGGIO: R.O. 665870



184121011

YAMAHA: R.O. 1SDH39120000



184121070

PIAGGIO: R.O. 177340





LEVE

LEVERS

184121080

PIAGGIO: R.O. 228966



184121090 NEW

SYM: R.O. 53175HMA000



184121100 NEW

SYM: R.O. 53175T6V000



184121110 NEW

SYM: R.O. 53175AAA000



184122000

KAWASAKI: R.O. 132361221-132361226



184122010

HUSQVARNA: R.O. 800079096
KTM: R.O. 50213020000



184122020

DERBI: R.O. 00H00906203
GAS GAS: R.O. R390002PL



184122030

GILERA: R.O. 344917



184122050

DAELIM: R.O. 53175BA40000
HONDA: R.O. 53175MK7671





184122060

CAGIVA: R.O. 00H00901201
DERBI: R.O. 00H00902201



184122070

HUSQVARNA: R.O. 800079067-8A0079067
YAMAHA: R.O. 5D7H39220000



184122080

HONDA: R.O. 53170KV0006



184122090

YAMAHA: R.O. 4SS839220100



184122100

KAWASAKI: R.O. 132361185



184122110

HUSABERG: R.O. 50313002100
KTM: R.O. 50313002100



184122120

CAGIVA: R.O. 800095726
KAWASAKI: R.O. 132361287
SUZUKI: R.O. 57300-32C10-000



184122130

YAMAHA: R.O. 5MV839220000-1C3839225000-1C3839225100



184122150

KAWASAKI: R.O. 132361326
SUZUKI: R.O. 57300-33E01-000



184122160

YAMAHA: R.O. 3TJ839220100



184122170

HONDA: R.O. 53170MBW006



184122180

HONDA: R.O. 53170MBRJ11





LEVE

LEVERS

184122190

YAMAHA: R.O. 3YX839220900



184122200

YAMAHA: R.O. 36Y839220000



184122210

KAWASAKI: R.O. 460921172
SUZUKI: R.O. 57420-0AE00-000



184122220

YAMAHA: R.O. 5WXH39220000



184122230

YAMAHA: R.O. 1D4F61650000



184122240

YAMAHA: R.O. 3YR839220000



184122250

GAS GAS: R.O. BT27922045



184122260

BMW: R.O. 32727655208



184122270

HONDA: R.O. 53170MEJ006



184122280

APRILIA: R.O. AP8133664
BENELLI: R.O. R301564046000
DUCATI: R.O. 62640271A-63140191A
KTM: R.O. 61013002044
MOTO GUZZI: R.O. AP8133664
MOTO MORINI: R.O. R2140031

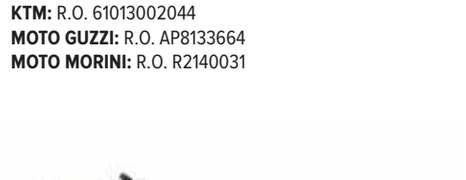

184122290

DUCATI: R.O. 63140331A-62610121A-63140561A

184122300

APRILIA: R.O. AP8113757
DUCATI: R.O. 62640071A
HUSQVARNA: R.O. 8000A7146



184122310

SUZUKI: R.O. 57300-29G00-000



184122320

YAMAHA: R.O. 5VY839220000



184122330

HUSABERG: R.O. 54813002100
KTM: R.O. 54813002100



184122340

MOTO GUZZI: R.O. 981050
YAMAHA: R.O. 5VS839220000



184122350

YAMAHA: R.O. 5XC83922G000



184122360

KEEWAY: R.O. 45022J3AT000



184122370

SUZUKI: R.O. 57421-44E00-000



184122380

KAWASAKI: R.O. 132361337
SUZUKI: R.O. 57300-10G31-000



184122390

KAWASAKI: R.O. 132360103



184122400

KAWASAKI: R.O. 460921203



184122410

HONDA: R.O. 53175KPK901
PEUGEOT
RIEJU
SACHS



184122420

HONDA: R.O. 53175MAB621





LEVE

LEVERS

184122430

DUCATI: R.O. 62640701A
GILERA: R.O. 649165



184122440

HARLEY DAVIDSON: R.O. 4694606A



184122450

DERBI: R.O. 00F00902292-00G00903201-864339
HM: R.O. K01300120



184122460

PEUGEOT



184122470

YAMAHA: R.O. 3FY839220000



184122490

DUCATI: R.O. 037039345-62610021A



184122500

BETA: R.O. 2127105000
GAS GAS: R.O. BT613003013



184122510 NEW

HONDA: R.O. 53170MCF006



184122520 NEW

KAWASAKI: R.O. 132360140



184122530 NEW

APRILIA: R.O. AP9100787
BETA: R.O. 2127104000
GAS GAS: R.O. BC250022045
HM-MOTO/VENT-MOTO: R.O. SM27108
HONDA: R.O. 53170MEB003



184122540 NEW

HONDA: R.O. 53170MAN911



184122550 NEW

HONDA: R.O. 53170MAT006





184122560 NEW

HONDA: R.O. 53175KK4010



184122570 NEW

HONDA: R.O. 53175MAK003



184122580 NEW

HONDA: R.O. 53170MEE006



184122590 NEW

HONDA: R.O. 53170MEL006



184122600 NEW

DAELIM
KAWASAKI: R.O. 460921140



184122610 NEW

SUZUKI: R.O. 57300-44G00-000



184122620 NEW

KAWASAKI: R.O. 132360024



184122630 NEW

KAWASAKI: R.O. 132360139



184122640 NEW

KAWASAKI: R.O. 132360169





LEVE PER APPLICAZIONI VARIE - *VARIOUS APPLICATION LEVERS*

184140010

LEVA STARTER | *STARTER LEVER*

MBK 50: Boster 92 • Booster R • Booster Spirit 96 (Freno a disco, Impianto Grimeca - *Brake disc model, Grimeca caliper*)



184140020

COMANDO STARTER | *STARTER CONTROL*

APRILIA 50: Rally 96 LC (Freno a disco, Impianto Grimeca - *Brake disc model, Grimeca caliper*) • Sr 96 • Sr Viper 93 • Urban Kid 93



184140050

LEVA ALZAVALVOLA PER DECOMPRESSIONE | *DECOMPRESSION VALVE CONTROL LEVER*

PIAGGIO 50: Bravo Erre 2 75-81 • Ciao 80-88 • SI 79-88 • Superbravo 85-90
R.O. 176946



184140060

LEVA ALZAVALVOLA PER DECOMPRESSIONE | *DECOMPRESSION VALVE CONTROL LEVER*

PIAGGIO 50: Ciao • Si
R.O. 268099



184140080 NEW

LEVA UNIVERSALE ALZAVALVOLA PER DECOMPRESSIONE | *UNIVERSAL DECOMPRESSION VALVE CONTROL LEVER*





121856120

VITE LEVA FRENO E FRIZIONE | *LEVER SECURING SCREW*
Confezione 50 pz. | *50 Pcs Packing*

PIAGGIO 50-90-125: Vespa Primavera ET3 • Vespa PX • Vespa PE
R.O. 150235-012136



121858170

BARILOTTO LEVA FRENO AL MANUBRIO | *PIVOT PINS FOR BRAKE LEVER*
Confezione 10 pz. | *10 Pcs Packing*
Ø 10x16 mm, Gambo 7,9 mm | *Stem 7,9 mm*



121858280

NOTTOLINO PER LEVA CROSS | *CROSS LEVER RATCHET*
Confezione 10 pz | *10 pcs Packing*



121858290

NOTTOLINO PER LEVA NYLON | *NYLON LEVER RATCHET*
Confezione 10 pz. | *10 Pcs Packing*



121858640

VITE PER LEVA | *LEVER SCREW WITH NUT*
Confezione 5 pz. | *5 Pcs Packing*
Vari Modelli Vespa | *Various Vespa Models*
R.O. 6610283M



121860033

LEVETTA FRENO POSTERIORE | *REAR BRAKE LEVER*

PIAGGIO 125-150-200: Vespa PX • Vespa PXE Arcobaleno VNX-VLX-VSX-VNX2-VLX2-VSX2
R.O. 1001014



121950010

MOLLA RITORNO LEVA | *LEVER RETURN SPRING*
Confezione 25 pz. | *25 Pcs Packing*



121950020

MOLLA RITORNO LEVA SINISTRA | *LEFT LEVER RETURN SPRING*
Confezione 25 pz. | *25 Pcs Packing*



121860323

KIT SERRACAVO FRENO ANTERIORE | *FRONT BRAKE CABLE NIPPLE*
Confezione 5 pz. | *5 Pcs Packing*
Vari Modelli Vespa | *Various Vespa Models*
R.O. 177271



184171000 NEW



184171010 NEW



184171020 NEW



184171030 NEW



184171040 NEW



184171050 NEW



184171060 NEW



184171070 NEW



184171080 NEW



184171090 NEW



184171100 NEW



184171110 NEW



184171120 NEW



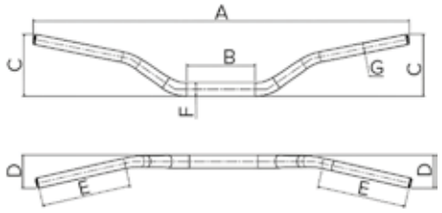

Codice RMS *RMS Code*	Codice Domino *Domino code*	Materiale *Material*	Piega *Bend*	Colore *Color*	A [mm]	B [mm]	C [mm]	D [mm]	E [mm]	F [mm]	G [mm]	X [mm]
184171090	**0462.94.10.04-1**	Alluminio Ergal 7075	Alta	Nero	810	147	133	72	190	Ø 28,5	Ø 22,15	-
184171100	**1130.94.10.04-1**	Alluminio Ergal 7075	Media	Nero	810	140	120	63	198	Ø 28,5	Ø 22,15	-
184171110	**0460.94.10.04-0**	Alluminio Ergal 7075	Alta	Nero	800	133	118	90	190	Ø 28,5	Ø 22	-
184171120	**0465.94.10.04-1**	Alluminio Ergal 7075	Barozzi	Nero	810	144	125	67	194	Ø 28,5	Ø 22,15	-

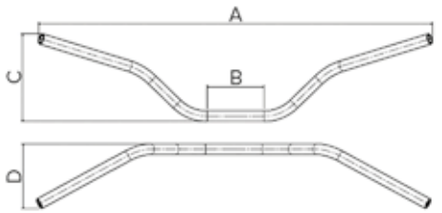

Codice RMS *RMS Code*	Codice Domino *Domino code*	Materiale *Material*	Piega *Bend*	Colore *Color*	A [mm]	B [mm]	C [mm]	D [mm]	E [mm]	F [mm]	G [mm]	X [mm]
184171000	**0141.31.20.04**	Acciaio verniciato	Alta	Nero	790	150	144	121	-	-	-	-
184171010	**0221.31.20.04**	Acciaio verniciato	Alta	Nero	810	135	163	104	-	-	-	-
184171020	**0259.31.20.04**	Acciaio verniciato	Alta	Nero	855	190	188	127	-	-	-	-
184171030	**2500.32.17.04**	Alluminio Avional 2014	Barozzi	Antracite scuro	802	155	138	72	-	-	-	-
184171040	**0113.31.27.04-3**	Acciaio verniciato	Alta	Antracite	807	144,5	122	78	-	-	-	-
184171050	**0217.31.60.04**	Acciaio cromato	Alta	Cromato	785	105	190	114	-	-	-	-
184171070	**0415.31.60.04**	Acciaio cromato	Media	Cromato	662	125	106	120	-	-	-	-
184171080	**0419.31.60.04**	Acciaio cromato	Bassa	Cromato	760	101	35	104	-	-	-	-

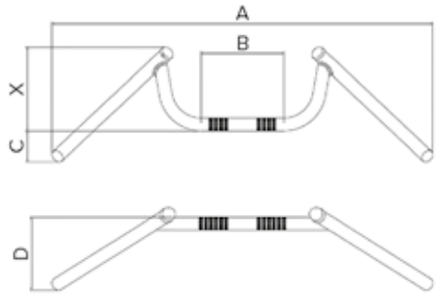

Codice RMS *RMS Code*	Codice Domino *Domino code*	Materiale *Material*	Piega *Bend*	Colore *Color*	A [mm]	B [mm]	C [mm]	D [mm]	E [mm]	F [mm]	G [mm]	X [mm]
184171060	**0284.31.60.04**	Acciaio cromato	-	Cromato	725	160	10	VAR	-	-	-	134

184040040

Freno Disco | *Brake Disc*

APRILIA 50: Scarabeo



184040050

APRILIA 50: Scarabeo 03



184040090

Leva in alluminio pressofuso, fulcro leva 29 mm | *Die cast aluminium lever, lever fulcrum 29 mm*

GILERA 50: Typhoon • Storm 97
R.O. 272002



184040100

PIAGGIO 50: NTT • NRG • Typhoon Martini • Typhoon Street



184040110

Leva in alluminio pressofuso, fulcro leva 29 mm | *Die cast aluminium lever, lever fulcrum 29 mm*

PIAGGIO 50: NRG • Thyphoon 97
R.O. 274998



184040140

MBK 50: Ovetto
YAMAHA 50: Neo's



184040160

MBK 50: Booster R Spirit



184040190

Destro | *Right*

PEUGEOT 50: Buxy • Speedake • Zenith



184040210

PIAGGIO 50: Free 98-99 • Free F1 97
R.O. 564704 - Ex 560026



184040240

PIAGGIO 50: Quartz • Zip Fast Rider
PIAGGIO 125-150: Skipper
R.O. 267955



184040300

PIAGGIO 50: Liberty 2T 97-05 • Liberty 4T 00-02 • Vespa ET2 97-05 • Vespa ET2 Iniezione 97-05 • Vespa ET4 90-05
PIAGGIO 125: Vespa ET4 90-05
R.O. 274211



184040410

Leva in plastica | *Plastic lever*

PIAGGIO 50: Ciao PX
R.O. 188056



184040430

Leva in alluminio | *Aluminium lever*

PIAGGIO 50: Si 90-91
R.O. 229004



184040470

PIAGGIO 50: Zip RST 98-99
PIAGGIO 125: Skipper 94-97
R.O. 274496



184040520

MBK 50: Booster N.G. 00 • Booster Spirit 00
YAMAHA 50: Bw's 00 • Bw's N.G. 00



184040570

DERBI 50: Senda R Drd X-Treme 2T Eu2 10-15 • Senda SM Drd Racing 2T Eu2 10-15 • Senda SM Racing Eu4 18 • Senda SM X-Treme Eu4 18 • Senda X-Treme R Eu4 18
GILERA 50: RCR 11-15 • RCR Eu4 18 • SMT 11-17 • SMT Eu4 18 • SMT Racing 11-12
R.O. 866942



184040580

Leva nera | *Black lever*

APRILIA 100: Scarabeo 00-04



184040590

Leva nera | *Black lever*

APRILIA 50: Scarabeo < 05 • Scarabeo 4T < 05
APRILIA 100: Scarabeo 4T 05



184040600

Leva in alluminio | *Aluminium lever*

GILERA 50: Typhoon < 05 • Liberty 2T < 05 • Liberty 4T < 05 • NRG < 02 • Vespa 4T 4V < 08 • Vespa LX 4T < 05 • Vespa S 2T < 07 • Vespa LX 2T < 05 • Fly 4T < 06
100: Fly 4t < 04
125: Fly 05-08 • Liberty 4T 04-08
150: Fly < 05 • Liberty 4T < 08 • Vespa LX < 05 • Vespa S 4T < 08
200: Liberty 4T < 07 • Liberty ST < 04
R.O. CM063804



184040631

KYMCO 50: Agility Carry 11
R.O. 00153431



184040640

PIAGGIO 50: Liberty 4T Delivery Single 10-14
PIAGGIO 125: Liberty 4T Eu3 Delivery Single 07-12 Modello poste Italiane
R.O. 601652



184040650

PIAGGIO 50: Liberty 4T Delivery TNT 09 • Liberty 4T PTT 07-12 • Liberty 4T PTT Double 09-12
PIAGGIO 125: Liberty 4T Eu3 Delivery TNT 08-09 • Liberty RST PTT 05-11
R.O. 601013



184040660

Leva in acciaio | *Steel lever*

PIAGGIO 50: Ciao SC 78
R.O. 162806



184080020

APRILIA 50: Amico Sport • Amico LX • SR 92-93
R.O. AP8218137



184080030

APRILIA 50: Scarabeo 97
R.O. AP8218214



184080050

Modello con freno a disco | *Brake disc model*
APRILIA 50: Scarabeo



184080110

APRILIA 50: Sonic • SR WWW
APRILIA 125-150-250: Leonardo > 99
ITALJET 50: Torpedo
MBK 50: Ovetto
PIAGGIO 50-100: Diesis
YAMAHA 50: Neo's



184080140

Corsa Filo Gas mm 20/70° | *Throttle stroke mm 20/70°*
DERBI 50: Vamos
PEUGEOT 50: Buxy • Speedake • Zenith • SV
PEUGEOT 125: SV
RIZZATO 50: Scooter



184080510

DERBI 125: Senda SR 4T • Senda SM R 06
RIEJU 50: Enduro SMX • SMX Pro > 06 • MRX Pro 06 • RR 06 • SMX • MRX < 06 • Spike 06



184080080

GILERA 50: Typhoon
PIAGGIO 50: Ape Mix
R.O. 566485



184080740

2 cavi | *2 cables*
KTM: Off Road < 2015
HUSQVARNA: 4T



184080750

2 cavi | *2 cables*
KTM: 4T 16>
HUSQVARNA: 4T 16>



184080130

MBK 50: Booster R



184080430

Senza Manopole | *Without grip*

MBK 50: Booster N.G. 00 • Booster R 04 • Booster Spirit 00 • Stunt
YAMAHA 50: Bw's 00 • Bw's N.G. 00 • Slider
RIEJU 50: RS2 Matrix Pro 07 • RS2 NKD 07



184080680

2 cavi | *2 cables*

MOTO GUZZI 750: Breva • Nevada • V7 Cafè Classic • Cafè Racer
R.O. GU32603310



184080090

PIAGGIO 50: NRG 94-96 • NTT 95-96
R.O. 564703



184080100

Leva in alluminio pressofuso | *Die cast aluminium lever*

PIAGGIO 50: NRG • Typhoon 97
R.O. 957270



184080200

PIAGGIO 50: Zip 95
R.O. 274531



184080330

Leva in plastica | *Plastic lever*

PIAGGIO 50: Ciao PX 88
R.O. 188057 Ex 178583



184080350

Leva in alluminio | *Aluminium lever*

PIAGGIO 50: Si 90-91
R.O. 228969



184080400

PIAGGIO 50: Free 98-99 • Free F1 97
R.O. 560026



184080490

Senza manopole e trasmissione | *Without grip and trasmission*

PIAGGIO 50: NRG • Vespa LX 4T
PIAGGIO 125: Beverly
PIAGGIO 200: Carnaby • Beverly
R.O. CM060915



184080500

Lunghezza tubo 112 mm | *Tube lenght 112 mm*

PIAGGIO 50-125: Vespa LX 4T
R.O. CM060977



184080650

Leva in acciaio | *Steel lever*

PIAGGIO 50: Ciao SC
R.O. 162804



184080470

PIAGGIO 125: Liberty 4T (Universale) • MP3 ie 08-09
PIAGGIO 250: MP3 RST > 06 • X9 • X7 ie • Carnaby 08 • MP3 LT 08-09
PIAGGIO 300: Vespa GTS • MP3 ie LT 10-11 • MP3 ie MIC 10-11 • MP3 ie LT - ie LT Sport 11-14
PIAGGIO 400: Beverly > 03 • Beverly Tourer Euro 3 08-10 • MP3 ie LT - ie LT Sport 08-10 • MP3 MIC 08-10
PIAGGIO 500: X9 • Beverly > 02
R.O. CM079724



184080480

Lunghezza tubo 124 mm | *Tube lenght 124 mm*

PIAGGIO 125-150: Beverly • MP3 • Vespa GTS • X9 • X-Evo
R.O.CM060975



184080520

2 cavi | *2 cables*



184080530

Modello Moped | *Moped model*
Corsa massima mm 43 (36 mm/148°) | *Max stroke mm 43 (36 mm/148°)*
Monocavo | *Single cable*



184080540

Modello Commandos | *Commandos model*
Corsa massima mm 42 (36 mm/79°) | *Max stroke mm 42 (36 mm/79°)*
Senza manopole | *Without grip*



184080560

Modello Commandos | *Commandos model*
Corsa massima mm 47 (36 mm/75°) | *Max stroke mm 47 (36 mm/75°)*
Senza manopole | *Without grip*



184080570

Racing
Corsa massima mm 44 (36 mm/90°) | *Max stroke mm 44 (36 mm/90°)*
Ghiera Bianca apertura 55° | *White ring opening 55°*
Ghiera Rossa apertura 53° | *Red ring opening 53°*
Ghiera Verde apertura 60° | *Green ring opening 60°*
Senza manopole | *Without grip*
2 cavi | *2 cables*



184080580

Gas Cross Con Carrucola | *Throttle Controls With Pulley*
Modello HR Cross 2T, completo di coprigas | *HR Cross model 2 strokes, with throttle covering*
Corsa massima mm 48,5 (36 mm/66°) | *Max stroke mm 48,5 (36 mm/66°)*



184080590

Modello HR Cross 2T, senza manopola | *HR Cross model 2 strokes, Without grip*
Corsa massima mm 48,5 (36 mm/66°) | *Max stroke mm 48,5 (36 mm/66°)*



184080610

Modello Endross | *Endross Model*
Modello Endross con movimento orizzontale, ghiera doppia corsa | *Endross Model with horizontal run, dual stroke ring nut*
Corsa massima mm 48 | *Max stroke mm 48*
Versione cross 36 mm/67° | *Cross version 36 mm/67°*
Versione enduro 36 mm/78° | *Enduro version 36 mm/78°*



184080620

Modello Commandos | *Commandos model*
Corsa massima mm 42 (36 mm/79°) | *Max stroke mm 42 (36 mm/79°)*
Monocavo | *Single cable*



184080630

Modello da Trial | *Trial Model*
Corsa massima mm 44 (28 mm/124°) | *Max stroke mm 44 (28 mm/124°)*



184080660

Moto Rally Cafè racer | *Rally Cafè racer Motorcycle*
Corsa massima mm 25 | *Max stroke mm 25*
Monocavo | *Single cable*



184080670

Moto Modello Lario | *Lario Model*
Corsa massima mm 25 | *Max stroke mm 25*
Monocavo | *Single cable*





TUBO COMANDO CAMBIO - *SHIFT CONTROL*

184040320

4 Velocità | *4 Speed*

PIAGGIO 50: Vespa S
V5SA1T
R.O. 138223



184040330

4 Velocità | *4 Speed*

PIAGGIO 50: Vespa 50 Special
V5B3T
R.O. 135935

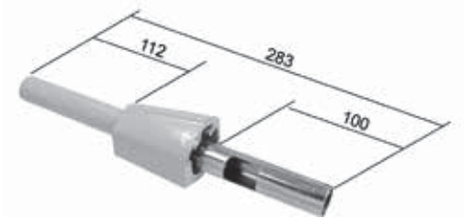

184040370

3 Velocità | *3 Speed*

PIAGGIO 50-90: Vespa 50-90
V5A1T-V9A1T
R.O. 1380115



184040380

4 Velocità | *4 Speed*

PIAGGIO 125: Vespa Primavera • Vespa TS • Vespa GT • Vespa GTR • Vespa Super
PIAGGIO 150: Vespa GL • Vespa Sprint • Vespa Sprint Veloce • Vespa Super
PIAGGIO 180-200: Vespa Rally
VMA2T-VNL3T-VSE1T-VNC1T-VBC1T
R.O. 090538

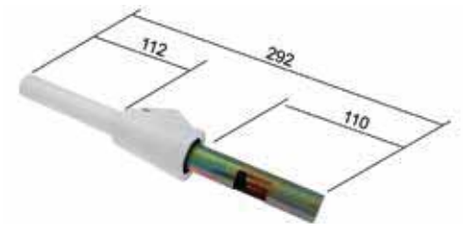

184040390

Freno a disco | *Brake disc*
Con sede per comando lampeggiatori | *With seat for flashers control*

PIAGGIO 125: Vespa PX 30 Anni 07-08 • Vespa PXE Arcobaleno • Vespa PX Euro2 01-07
R.O. 219356



184040400

3 Velocità | *3 Speed*

PIAGGIO 50: Vespa R
PIAGGIO 90: Vespa 90
V5A1T-V9B1T
R.O. 138011

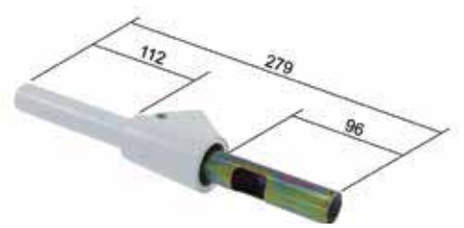

184040700

4 Velocità | *4 Speed*

PIAGGIO 125-150: Vespa 125-150 • Vespa GS
PIAGGIO 160: Vespa GS
R.O. 60555

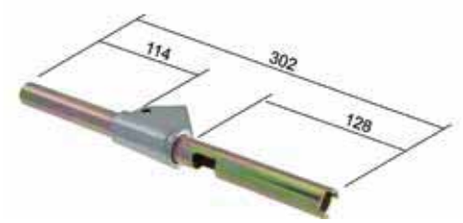

184040720

4 Velocità | *4 Speed*

PIAGGIO 125: Vespa Primavera • Vespa ET3 • Vespa TS • Vespa GTR • Vespa Sprint • Vespa Super
PIAGGIO 150: Vespa Super
PIAGGIO 200: Vespa Rally
VMAT2-VMB1T-VNLBT-VNL2T-VLB1T-VBC1T-VBC1T-VSE1T
R.O. 137840

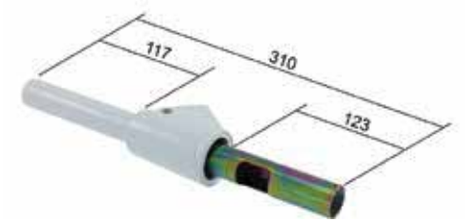

184040730

Per modelli senza lampeggiatori | *For vehicles without flashers*

PIAGGIO 125: Vespa PX
PIAGGIO 150: Vespa PX
PIAGGIO 200: Vespa PE
R.O. 139780

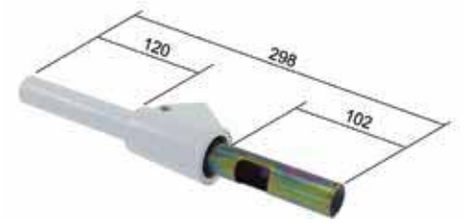



TUBO COMANDO GAS - *THROTTLE CONTROL*

184080270

3 Velocità | *3 Speed*

PIAGGIO 50: Vespa 50 • Vespa R • Vespa S • Vespa Sprinter
PIAGGIO 90: Vespa 90
V5A1T-V5SA1T-V5SS2T-V9A1T
R.O. 70690



184080290

PIAGGIO 50: Vespa PK • Vespa Rush • Vespa N • Vespa PK Automatica • Vespa PK XL • Vespa PK XL Plurimatic
PIAGGIO 125: Vespa PX • Vespa PXE Arcobaleno • Vespa PX 30 Anni • Vespa PX Euro2
R.O. 139778



184080320

PIAGGIO 50-90: Vespa > 77
R.O. 138013



184080690

PIAGGIO 125-150: Vespa '64

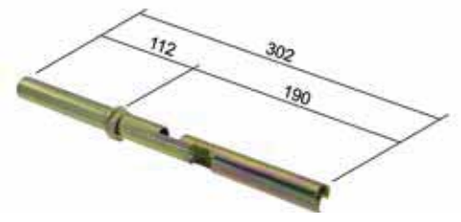

184080700

PIAGGIO 125: Vespa Primavera • Vespa Super • Vespa GT
PIAGGIO 150: Vespa Super • Vespa Sprint • Vespa Sprint Veloce • Vespa GL
PIAGGIO 180-200: Vespa Rally
VMA2T-VBC1T-VLB1T-VNL2T-VSE1T-VSD1T
R.O. 70589



184080710

4 Velocità | *4 Speed*

PIAGGIO 50-90: Vespa SS
R.O. 101464



184080720

PIAGGIO 50: Vespa 50 Special
V5B3T
R.O. 137939



184080753

PIAGGIO 125: Cosa 2 91-97 • Cosa CL-CLX 88-91
R.O. 228531



184040783

TUBETTO GAS | *THROTTLE CONTROL*

PIAGGIO 50 : Vespa N • Vespa L • Vespa R
R.O. 139798



121858480

CORSOIO CON VITE | *SLIDING BLOCK WITH SCREW*

PIAGGIO 50: Ciao • Si
R.O. 229935



121858510

RONDELLA | *WASHER*
Confezione 20 pz. | *20 Pcs Packing*

PIAGGIO 125-150-200: Vespa PX • Vespa PXE Arcobaleno VNX-VLX-VSX-VNX2-VLX2-VSX2
R.O. 139890



121860300

KIT PIPETTE GUIDAFILO UNIVERSALI PER COMANDI GAS XM2 | *UNIVERSAL CABLE BENDS KIT FOR XM2 THROTTLE CONTROLS*
Per comando gas 184080570 | *For throttle control 184080570*



184040610

PULEGGIA CAMBIO | *GEAR PULLEY*

PIAGGIO 50: Vespa N • Vespa PK • Vespa PK Automatica • Vespa PK XL • Vespa PK XL Plurimatic • Vespa Rush
PIAGGIO 125: Vespa PK XL • Vespa PX • Vespa PX 30 Anni • Vespa PX Euro2 • Vespa PXE Arcobaleno • Vespa T5
PIAGGIO 150: Vespa PX
R.O. 139796



184040620

PULEGGIA GAS | *THROTTLE PULLEY*

PIAGGIO 50: Vespa N • Vespa PK • Vespa PK Automatica • Vespa PK XL • Vespa PK XL Plurimatic • Vespa Rush
PIAGGIO 125: Vespa PK XL • Vespa PX • Vespa PX 30 Anni • Vespa PX Euro2 • Vespa PXE Arcobaleno • Vespa T5
PIAGGIO 150: Vespa PX
R.O. 139797



163620210

TRASMISSIONE COMANDO GAS KRR 03 UNIVERSALE | *KRR 03 UNIVERSAL THROTTLE CABLE SET*
Per comando gas 184080570 | *For throttle control 184080570*





184040673

BUSSOLA CAVO | *BUSH*

PIAGGIO 50: Vespa N • Vespa PK • Vespa PK Automatica • Vespa PK XL • Vespa PK XL Plurimatic • Vespa Rush
PIAGGIO 125: Vespa PK XL • Vespa PX • Vespa PX 30 Anni • Vespa PX Euro2 • Vespa PXE Arcobaleno • Vespa T5
PIAGGIO 150: Vespa PX
R.O. 133912



184040683

BUSSOLA CAVO | *BUSH*

PIAGGIO 50: Vespa N • Vespa PK • Vespa PK Automatica • Vespa PK XL • Vespa PK XL Plurimatic • Vespa Rush
PIAGGIO 125: Vespa PK XL • Vespa PX • Vespa PX 30 Anni • Vespa PX Euro2 • Vespa PXE Arcobaleno • Vespa T5
PIAGGIO 150: Vespa PX
R.O. 133913



184140070

COMANDO STARTER | *STARTER CONTROL*



121860390 NEW

SDOPPIATORE UNIVERSALE Ø 6,25 mm | *UNIVERSAL SPLITTER Ø 6,25 mm*



121860400 NEW

SDOPPIATORE UNIVERSALE Ø 6,8 mm | *UNIVERSAL SPLITTER Ø 6,8 mm*



121860410 NEW

SDOPPIATORE UNIVERSALE Ø 6,8 mm | *UNIVERSAL SPLITTER Ø 6,8 mm*



121860420 NEW

MOLTIPLICATORE DI CORSA 1 : 1.33 | *OVERDRIVE STROKE 1 : 1.33*



121860430 NEW

COPRIGAS UNIVERSALE | *UNIVERSAL CABLE PROTECTION*



184140090 NEW

COMANDO CHOKE UNIVERSALE | *UNIVERSAL CHOKE*



184040690 NEW

KIT BOCCOLE MANUBRIO | *HANDLEBAR MOUNTING BUSHINGS KIT*
Per installazione dei coprimanubrio inferiore: 142680503 - 142680513 - 142680514 | *Adapt for handbar lower part installation: 142680503 - 142680513 - 142680514*
Composizione kit:
2 x 184040790
2 x 184040800
1 x 184040810

LML 125-150: Star 2t • Star 4t
PIAGGIO 80-125-150-200: Vespa PX 80 80-90 • Vespa P125X 77-82 • Vespa PX 125 81-07 • Vespa T5 92-95 • Vespa P150X 78-85 • Vespa PX 150 83-07 • Vespa PX 200 83-05



184040790 NEW

BOCCOLA MANUBRIO | *HANDLEBAR BUSHING*
Ø27 x Ø24 x 11mm
Confezione 10 pz. | *10 Pcs Packing*

LML 125-150: Star 2t • Star 4t
PIAGGIO 80-125-150-200: Vespa PX 80 80-90 • Vespa P125X 77-82 • Vespa PX 125 81-07 • Vespa T5 92-95 • Vespa P150X 78-85 • Vespa PX 150 83-07 • Vespa PX 200 83-05



184040800 NEW

BOCCOLA MANUBRIO | *HANDLEBAR BUSHING*
Ø27 x Ø24 x 17mm
Confezione 10 pz. | *10 Pcs Packing*

LML 125-150: Star 2t • Star 4t
PIAGGIO 80-125-150-200: Vespa PX 80 80-90 • Vespa P125X 77-82 • Vespa PX 125 81-07 • Vespa T5 92-95 • Vespa P150X 78-85 • Vespa PX 150 83-07 • Vespa PX 200 83-05



184040810 NEW

BOCCOLA MANUBRIO | *HANDLEBAR BUSHING*
Ø27 x Ø24 x 39mm
Confezione 10 pz. | *10 Pcs Packing*

LML 125-150: Star 2t • Star 4t
PIAGGIO 80-125-150-200: Vespa PX 80 80-90 • Vespa P125X 77-82 • Vespa PX 125 81-07 • Vespa T5 92-95 • Vespa P150X 78-85 • Vespa PX 150 83-07 • Vespa PX 200 83-05





MANOPOLE DOMINO - *DOMINO GRIPS*

184160020

Nero | *Black*

Modello **GP** - *Model* **GP**



Estremità aperta
Open end

184160030

Nero | *Black*

Modello **TOURING** - *Model* **TOURING**



Estremità aperta
Open end

184160040

Nero | *Black*

PIAGGIO 50: Ciao 80-88 • Si 79-88 • Ape P 80-85 • Ape TM P 85-89 • Bravo 3 87-90 • Bravo Erre 2 75-81
R.O. 185256



Estremità chiusa
Closed end

184160050

Nero | *Black*

PIAGGIO 50: Ciao Tre 71-99 • Ciao 80-88 • Superbravo 85-90 • Ape TMP 85-89 • Superbravo 3 87-90
R.O. 233072 - 233075



Estremità chiusa
Closed end

184160060

Nero | *Black*

PIAGGIO 50: Sfera Maquillage 2 94 • Sfera 91-03 • Si FL2 91-97
R.O. 267205 - 267206



Estremità chiusa
Closed end

184160070

Nero | *Black*

APRILIA 50-125: SR Motard • Sport City One
DERBI 50-125-150: Boulevard • Variant Sport
GILERA 50-125: Easy Moving • Typhoon • Typhoon X-XR
PIAGGIO 50-125-150: Fly • NRG • Sfera • Typhoon • Vespa FL2 • Vespa S • Vespa LX • Zip • Zip SP
R.O. 274489 - 274490



Estremità chiusa
Closed end



MANOPOLE

GRIPS

184160080

Nero | *Black*

PIAGGIO 50: Vespa FL2 HP



184160150

Nero | *Black*

Modello **SCOOTER** - *Model* **SCOOTER**



184160400

Nero / Grigio | *Black / Grey*

Modello **XM2** - *Model* **XM2**



184160410

Nero / Rosso | *Black / Red*

Modello **XM2** - *Model* **XM2**



184160420

Nero / Blu | *Black / Blue*

Modello **XM2** - *Model* **XM2**



184160430

Nero / Rosso | *Black / Red*

Modello **CROSS** - *Model* **CROSS**





184160440

Nero / Giallo | *Black / Yellow*
Modello **CROSS** - *Model* **CROSS**



184160450

Nero / Grigio | *Black / Grey*
Modello **CROSS** - *Model* **CROSS**



184160460

Nero | *Black*
Modello **CROSS/ENDURO** - *Model* **CROSS/ENDURO**



184170080

Azzurro | *Blue*
Modello **CROSS/ENDURO** - *Model* **CROSS/ENDURO**



184160480

Rosso | *Red*
Modello **CROSS/ENDURO** - *Model* **CROSS/ENDURO**



184161080 NEW

Giallo Fluo | *Fluorescent yellow*
Modello **CROSS/ENDURO** - *Model* **CROSS/ENDURO**





MANOPOLE

GRIPS

184160500

Grigio / Nero | *Grey / Black*
Modello **TRIAL** - *Model* **TRIAL**



184160510

Nero / Rosso | *Black / Red*
Modello **TRIAL** - *Model* **TRIAL**



184160520

Nero / Grigio | *Black / Grey*
Modello **TRIAL** - *Model* **TRIAL**



184160530

Nero | *Black*
Modello **DAKAR** - *Model* **DAKAR**



184160540

Nero | *Black*
Modello **DAKAR** - *Model* **DAKAR**



184160570

Nero | *Black*
Modello **INDOOR** - *Model* **INDOOR**





184160580

Nero | *Black*

APRILIA 125-300: SR Max
GILERA 50-125-200: Runner Purejet • Runner SP • Runner VX-VXR
GILERA 500: Fuoco
PIAGGIO 50: NRG Power
PIAGGIO 125-200-250-300: Hexagon • MP3 • Vespa Granturismo • Vespa GTS • X7 • X8 • X9 • Skipper
R.O. 271452 - 271453



184160590

Nero | *Black*

PIAGGIO 125-250-300: Vespa GT • Vespa GTV • Beverly Cruiser
PIAGGIO 500: Beverly Cruiser
R.O. 648550 - 648551



184160600

Nero | *Black*

PIAGGIO 125-250-300: Beverly • Beverly RST • Beverly Tourer • Beverly Sport
R.O. 583255 - 583256



184160620

Nero / Rosso | *Black / Red*
Modello **DSH** - *Model* **DSH**



184160630

Nero / Verde | *Black / Green*
Modello **DSH** - *Model* **DSH**



184160640

Nero / Arancio | *Black / Orange*
Modello **DSH** - *Model* **DSH**





MANOPOLE

GRIPS

184160650

Grigio / Arancio | *Grey / Orange*
Modello **DSH** - *Model* **DSH**



184160660

Nero / Grigio | *Black / Grey*
Modello **DSH** - *Model* **DSH**



184161070 NEW

Nero / Giallo | *Black / Yellow*
Modello **DSH** - *Model* **DSH**



184160700

Nero | *Black*
HONDA 300: SH 07-14
HONDA 700: Integra 12-13



184160701

Nero | *Black*
HONDA 300: SH 07-14
HONDA 700: Integra 12-13



184160710

Para Compound
Modello **RETRÒ** - *Model* **RETRÒ**





184160720

Nero | *Black*
YAMAHA SCOOTER



184160730

Grigio | *Grey*
Modello **DSH SOFT PLUS** - *Model* **DSH SOFT PLUS**



184160740

Verde | *Green*
Modello **DSH SOFT PLUS** - *Model* **DSH SOFT PLUS**



184160750

Nero | *Black*
SUZUKI



184160760

Camouflage sabbia | *Camouflage sand*
Modello **DSH DESERT** - *Model* **DSH DESERT**



184160770

Camouflage verde | *Camouflage green*
Modello **DSH JUNGLE** - *Model* **DSH JUNGLE**





MANOPOLE

GRIPS

184160780

Camouffage urban | *Camouffage urban*
Modello **DSH URBAN** - *Model* **DSH URBAN**



184160790

Giallo / Nero | *Yellow / Black*
Modello **DSH SNAKE** - *Model* **DSH SNAKE**



184160800

Blu / Bianco | *Blue / White*
Modello **DSH SNAKE** - *Model* **DSH SNAKE**



184160810

Arancio / Nero | *Orange / Black*
Modello **DSH SNAKE** - *Model* **DSH SNAKE**



184160820

Verde / Nero | *Green / Black*
Modello **DSH SNAKE** - *Model* **DSH SNAKE**



184160830

Rosso / Nero | *Red / Black*
Modello **DSH SNAKE** - *Model* **DSH SNAKE**





184160900

Nero | *Black*
Modello **DAYTONA** - *Model* **DAYTONA**



184160910

Para Compound
Modello **DAYTONA** - *Model* **DAYTONA**



184160930

Para Compound
Modello **CAFÈ RACER** - *Model* **CAFÈ RACER**



184160940

Antracite / Grigio | *Grey / Anthracite*
Modello **TURISMO** - *Model* **TURISMO**



184160950

Argento / Antracite | *Silver / Anthracite*
Modello **TURISMO** - *Model* **TURISMO**



184160960

Rosso / Nero | *Red / Black*
Modello **TURISMO** - *Model* **TURISMO**





MANOPOLE

GRIPS

184160970 NEW

Antracite / Rosso | *Anthracite / Red*
Modello **TURISMO** - *Model* **TURISMO**



184160980 NEW

Verde / Nero | *Green / Black*
Modello **TURISMO** - *Model* **TURISMO**



184160990 NEW

Antracite / Verde | *Anthracite / Green*
Modello **TURISMO** - *Model* **TURISMO**



184161090 NEW

Antracite / Nero | *Anthracite / Black*
Modello **TURISMO** - *Model* **TURISMO**



184170000 NEW

Blu / Nero | *Blue / Black*
Modello **TURISMO** - *Model* **TURISMO**



184170010 NEW

Antracite / Blu | *Anthracite / Blue*
Modello **TURISMO** - *Model* **TURISMO**





184170020 NEW

Antracite / Giallo | *Anthracite / Yellow*
Modello **TURISMO** - *Model* **TURISMO**



184170030 NEW

Antracite / Arancione | *Anthracite / Orange*
Modello **TURISMO** - *Model* **TURISMO**



184170040 NEW

Marrone / Nero | *Brown / Black*
Modello **TURISMO** - *Model* **TURISMO**



184170050 NEW

Argento / Marrone | *Silver / Brown*
Modello **TURISMO** - *Model* **TURISMO**



184170060 NEW

Marrone / Grigio | *Brown / Silver*
Modello **TURISMO** - *Model* **TURISMO**



184170070 NEW

Nero | *Black*
Modello **JAPAN STYLE** - *Model* **JAPAN STYLE**





MANOPOLE

GRIPS

184161000 NEW

Nero / Rosso | *Black / Red*
Modello **A360** - *Model* **A360**



184161010 NEW

Nero / Verde | *Black / Green*
Modello **A360** - *Model* **A360**



184161020 NEW

Nero / Arancio | *Black / Orange*
Modello **A360** - *Model* **A360**



184161030 NEW

Nero / Giallo | *Black / Yellow*
Modello **A360** - *Model* **A360**



184161040 NEW

Nero / Grigio | *Black / Grey*
Modello **A360** - *Model* **A360**



184161050 NEW

Blu / Bianco | *Blue / White*
Modello **A360** - *Model* **A360**





184161060 NEW

Grigio / Arancio | *Grey / Orange*
Modello **A360** - *Model* **A360**



184161100 NEW

Nero | *Black*
BMW: Modelli > 2013 con Navigator



184161110 NEW

Nero | *Black*
BMW: Modelli < 2013



184160090

Nero | *Black*
PIAGGIO 50-125: Vespa PK • Vespa PK XL
R.O.227077



184160100

Nero | *Black*
PIAGGIO 50: Vespa Special 69-83 • Vespa Special Elestart 69-75
PIAGGIO 125: Vespa Primavera 67-83 • Vespa ET3 76
R.O.141924



184160110

Nero | *Black*
PIAGGIO 125: Vespa PX • Vespa GT • Vespa GTR • Vespa Super
PIAGGIO 150: Vespa PX • Vespa Sprint • Vespa Super
PIAGGIO 180: Vespa Rally
PIAGGIO 200: Vespa PE • Rally
R.O.141923





184160120

Nero | *Black*

PIAGGIO 125-150-200: Vespa PXE Arcobaleno
R.O.179833



184160140

Grigio | *Grey*

PIAGGIO 125: Vespa PX • Vespa GT • Vespa GTR • Vespa Super
PIAGGIO 150: Vespa PX • Vespa Sprint • Vespa Super
PIAGGIO 180: Vespa Rally
PIAGGIO 200: Vespa PE • Rally



184160180

184160280

Nero | *Black*
Gomma morbida | *Soft compound*
Modello **STRONG GRIP** - *Model* **STRONG GRIP**



184160190

Nero | *Black*
Estremità cromate | *Chromed ends*
Modello **CUSTOM** - *Model* **CUSTOM**



184160200

Carbon look
Estremità cromate | *Chromed ends*
Modello **CUSTOM** - *Model* **CUSTOM**



184160210

Nero | *Black*

Modello **AIR GRIP** - *Model* **AIR GRIP**





184160220

Nero | *Black*

Modello **EASY GRIP** - *Model* **EASY GRIP**



184160230

Nero | *Black*

Modello **SUPER GRIP** - *Model* **SUPER GRIP**



184160240

Nero | *Black*
Estremità cromate | *Chromed ends*
Modello **CUSTOM** - *Model* **CUSTOM**



184160250

Nero | *Black*



184160260

Nero | *Black*



184160270

Nero | *Black*



184160290

Trasparente | *Transparent*
Terminale Carbon ed anelli Silver | *Carbon End - Silver Rings*



184160300

Trasparente | *Transparent*
Terminale ed anelli Rosso | *Red End - Red Rings*



184160310

Trasparente | *Transparent*
Terminale ed anelli Blu | *Blue End - Blue Rings*





184160330

Nero | *Black*
Terminale ed anelli Silver | *Silver End - Silver Rings*



184160340

Nero | *Black*
Terminale ed anelli Rosso | *Red End - Red Rings*



184160350

Nero | *Black*
Terminale ed anelli Blu | *Blue End - Blue Rings*



184160390

Nero | *Black*

PIAGGIO 125-150-200: Vespa PX Freno a disco 98-01
PIAGGIO 125: Vespa PX Millenium
R.O. 582234



184160550

Grigio | *Grey*

PIAGGIO 50: Vespa Special 69-83 • Vespa Special Elestart 69-75
PIAGGIO 125: Vespa Primavera 67-83 • Vespa ET3 76



184160560

Grigio | *Grey*

PIAGGIO 50: Vespa 50 Rush 88 • Vespa N 90
R.O. 248317



184160670

Nero | *Black*
Inserto in alluminio Silver | *Silver Alloy ends*



184160680

Nero | *Black*
Inserto in alluminio Rosso | *Red Alloy ends*



184160690

Nero | *Black*
Inserto in alluminio Blu | *Blue Alloy ends*





184160840

Nero | *Black*
Modello **VINTAGE** - *Model* **VINTAGE**



184160850

Marrone | *Brown*
Modello **VINTAGE** - *Model* **VINTAGE**



184160860

Caffè | *Coffee*
Modello **VINTAGE** - *Model* **VINTAGE**



184160870

Nero | *Black*
Modello **VINTAGE** - *Model* **VINTAGE**



184160880

Marrone | *Brown*
Modello **VINTAGE** - *Model* **VINTAGE**



184160890

Caffè | *Coffee*
Modello **VINTAGE** - *Model* **VINTAGE**



484040020

Spugna Nera | *Black Foam*



184160610

KIT COPERTINA COPRIMANOPOLA | *GRIP COVER*



APRILIA

121630020

50: SR WWW • SR Ditech • Rally 98



121630300

Motori Piaggio | *Piaggio Engine*
Fornito con distanziale e bullone lungo da utilizzare per la versione con motore Piaggio | *With Piaggio engine assembly kit*

50: SR Ditech 2T Factory Street



121630360

Motori Piaggio | *Piaggio Engine*

50: Scarabeo Street 2T



GILERA

121630050

50: Typhoon - Storm



121630060

50: Stalker



121630310

50: Runner SP • Runner Poggiali • Runner Purejet





CAVALLETTI LATERALI

SIDE STANDS

HONDA

121630280

125-150: SH 01-09



121630510

125-150: SH dal 10



KYMCO

121630590

50: Like 2T 09 • Like 4T 09
125: Like LX 12
200: Like I 09 • Like LX 12
R.O. 00150178





LML

121630490

Con ritorno automatico | *Automatic return model*

125-150: Star 2T



121630491

Con ritorno automatico | *Automatic return model*
Cromato | *Chromed*

125-150: Star 2T



MALAGUTI

121630550

50: DVD



MBK

121630150

50: Nitro



121630160

50: Ovetto



121630170

50: Booster R • Booster NG



121630200

50: Booster • Booster Track



121630320

50: Booster Spirit Euro2



121630440

50: CS Mach G





121630450

50: Booster 4T



PEUGEOT

121630460

Ruota 14" | *Wheel 14"*
50: Ludix



121630500

Ruota 12" | *Wheel 12"*
50: Ludix



121630610

50: Kisbee



121630640

50: Speedfight 3



PIAGGIO

121630050

50: NRG • NTT • NRG Extreme



121630060

50: Zip SP



121630250

50: Zip 2T-4T • Zip Fast Rider • Sfera • Quartz



121630260

50: Vespa ET2



121630310

50: NRG Extreme



121630340

50-125-150: Liberty Modello Poste | *Postal service Model* R.O. 646545





121630350

50: Liberty 2T - 4T '00



121630410

250: X7 IE



121630420

50: NRG Power DD • NRG Purejet



121630470

Con ritorno automatico | *Automatic return*

50-90-125: Vespa • Vespa Primavera



121630471

50-125: Vespa PK



121630480

Con ritorno automatico | *Automatic return*

50-125: Vespa PK



121630481

Con ritorno automatico | *Automatic return*
Cromato | *Chromed*

50-90-125: Vespa • Vespa Primavera



121630490

Con ritorno automatico | *Automatic return*

125-150-200: Vespa PX



121630491

Con ritorno automatico | *Automatic return*
Cromato | *Chromed*

125-150-200: Vespa PX





CAVALLETTI LATERALI

SIDE STANDS

121630520

125: Vespa GTS
200: Vespa GTV • Vespa Granturismo
250: Vespa GT 60 • Vespa GTS



121630521

Cromato | *Chromed*
125: Vespa GTS
200: Vespa GTV • Vespa Granturismo
250: Vespa GT 60 • Vespa GTS



121630580

50: Vespa LX 2T Touring 10-13 • Vespa LX 4T 4V Touring 10-13 • Vespa S 2T 07-12 • Vespa S 4T 4V 08-12
125: Vespa LX 4T Touring 10-11 • Vespa LXV IE 4T 10-12 • Vespa S 4T 3V IE 12-13 • Vespa S 4T ie 09-11
150: Vespa LX Touring 10-12 • Vespa S 4T IE 08-12
R.O. 56466R



121630620

50: Vespa Primavera 2T 13-14
125: Vespa Primavera LX 4T 3V IE 13
150: Vespa Primavera 4T 3V 13



121630630

Cromato | *Chromed*
50: Vespa Primavera 2T 13-14
125: Vespa Primavera LX 4T 3V IE 13
150: Vespa Primavera 4T 3V 13



121630651

Cromato | *Chromed*
50: Vespa Sprint 13-14





121630660

125: Beverly Euro3 Mic 07 • Beverly Euro3 Sport 07-08 • Beverly Euro3 07-08 • Beverly RST 05-07 • Beverly Tourer Euro3 07-10
250: Beverly Euro3 Mic 07 • Beverly Cruiser 07-09 • Beverly ie Euro3 06-08 • Beverly Sport 06-08 • Beverly Tourer Euro3 08-09 • Beverly 06-07
300: Beverly Tourer Euro3 09-10



121630661

Cromato | *Chromed*

125: Beverly Euro3 Mic 07 • Beverly Euro3 Sport 07-08 • Beverly Euro3 07-08 • Beverly RST 05-07 • Beverly Tourer Euro3 07-10
250: Beverly Euro3 Mic 07 • Beverly Cruiser 07-09 • Beverly IE Euro3 06-08 • Beverly Sport 06-08 • Beverly Tourer Euro3 08-09 • Beverly 06-07
300: Beverly Tourer Euro3 09-10



121630670

125: Beverly RST 4T 4V IE Euro3 10-13
300: Beverly RST 4T 4V IE Euro3 10-14
350: Beverly RST 4T 4V IE Euro3 Sport Touring 11-14



121630671

Cromato | *Chromed*

125: Beverly RST 4T 4V IE Euro3 10-13
300: Beverly RST 4T 4V IE Euro3 10-14
350: Beverly RST 4T 4V IE Euro3 Sport Touring 11-14



YAMAHA

121630150

50: Aerox



121630160

50: Neo's



121630170

50: Bw's



121630200

50: Bump • Bw's



121630320

50: Bw's Original Euro2



121630440

50: Jog R



121630600

50: Neo's 4T



SCOOTER CINESI - *CHINESE SCOOTERS*

121630560

Scooter Cinesi 50 4T - *Chinese Scooters 50 4T*



121630570

Scooter Cinesi 125 4T - *Chinese Scooters 125 4T*



APRILIA

121610030

50: SR • Gulliver 94-03
R.O. AP8232819



121610040

Con staffa fissaggio modificata | *With modified fixing bracket*

50-80-100: Scarabeo 2T
R.O. AP8232927



121610070

50: Sonic GP 98-08
R.O. AP8232987



121610100

Motori Piaggio | *Piaggio Engine*

50: Scarabeo 2T • Scarabeo Net 2T • Scarabeo Street 2T
R.O. AP8235177



121610430

Con staffa fissaggio modificata | *With modified fixing bracket*

50: Scarabeo Motori Minarelli 2T



121610440

Con staffa fissaggio modificata | *With modified fixing bracket*

50: SR Motori Minarelli 2T



121610950

50: Scarabeo Quattro 09 • Scarabeo 4T 02-06 • Scarabeo 4T Restyling 06-09 • Scarabeo 4T 4V Net 09-12
100: Scarabeo 4T 01-12
R.O. 600183



121610390

Motori Piaggio | *Piaggio Engine*

100-125-150: Scarabeo 4T
R.O. 581835



121610410

125-150: Habana
R.O. 580902 - 56467R



DERBI

121610950

125: Sonar 4T 09 -11
150: Sonar 09
R.O. 600183



GILERA

121610110

50: Runner • Ice • NRG 96-12
R.O. 581537



121610120

50: Typhoon • Typhoon X 2T 01-11 Typhoon Euro2 10-12 • Typhoon Euro3 11
R.O. 581505



121610130

50: Stalker • Runner 97-00 • Runner Poggiali 02 • Runner Purejet 02-04 • Runner SP 02-04
R.O. 581785



121610140

125: Typhoon 95-98 •Typhoon XR 98-00 • Runner FX - FXR
R.O. 580985



HONDA

121610530

125-150: Chiocciola 4T • Arobase



121610540

125-150: SH 4T
R.O. 50500-KPR-900



INNOCENTI

121610960

Zincato | *Galvanized*
Ruota 10" | *Wheel 10"*
125-150-200: Lambretta LI 3° DL serie
R.O. 19957030



121611070

125-150: Lambretta LI 2°Serie



ITALJET

121610200

50: Pista 2T 92



KYMCO

121610760

Ruota 16" | *Wheel 16"*

50: Agility 4T R16 08-12
R.O. 00150056



121610150

125-150: People 4T 03-11
R.O. 00165700



121610730

Ruota 12" | *Wheel 12"*

125: Agility RS 4T 09 • Agility 4T Euro3 06-08
R.O. 00164128



121610740

125: Super 8 4T 08-09
R.O. 00150051



121610820

125-200: People 4T
R.O. 00165704



LML

121610691

Zincato | *Galvanized*

125-150: Star 2T



MALAGUTI

121610180

50: F10 • Yesterday
R.O. 15803499



121610190

50: F12 Aria • F12 LC • F15 • Centro
R.O. 15804055



121610230

50: Ciak
R.O. 15804899



121610450

Con staffa fissaggio modificata | *With modified fixing bracket*
50: F12 • F15



121610620

Con staffa fissaggio modificata | *With modified fixing bracket*
50: F12 • F15 • Ciak



MBK

121610180

50: Sorriso • Evolis 91-93



121610200

50: Booster 90-94 • Spirit • Road • Ng • Rocket
R.O. 5WWF71110000



121610220

50: Ovetto 97-01
R.O. 5ADF71110100



121610230

50: Flipper 2T
R.O. 5EUF71111000



121610240

50: Stunt 00-02
R.O. 5JHF71110000



121610250

50: Booster NG • Track • Bump
R.O. 5LUF71110000



121610260

50: Nitro 2T 00-03
100: Booster



121610440

Con staffa fissaggio modificata | *With modified fixing bracket*

50: Nitro



121610450

Con staffa fissaggio modificata | *With modified fixing bracket*

50: Ovetto 97-01



121610620

Con staffa fissaggio modificata | *With modified fixing bracket*

50: Flipper



PEUGEOT

121610650

Ruota 12"- 14" | *Wheel 12"- 14"*

50: Ludix
R.O. 761700



121610390

Motori Piaggio | *Piaggio Engine*

125-150: Looxor
R.O. 746916



PIAGGIO

121610100

50: Zip • Zip Fast Rider 93-94 • Zip RST 2T 96-99
R.O. 581226



121610120

50: Typhoon • Typhoon X 12
R.O. 581505



121610130

50: NRG 2T 96-12
R.O. 581785



121610290

50: Free 92-94 • Free Delivery 00-01 • Free FL 95-02
R.O. 271144



121610300

50: Sfera RST 2T 91-93 • Quartz 92-96
R.O. 259209



121610320

50: Vespa 2T ET2 97-00 • Vespa LX 2T 10-13 • Vespa LXV 2T Navy 08 • Vespa S 2T & College 07-12 • Sfera 95-00
R.O. 582155





121610390

50: Liberty 4T 00-02
125: Liberty 01-02
R.O. 581835



121610410

50-100-125-150: Fly 4T
125: Zip 00-02
150: Vespa ET4
R.O. 601708-56467R-582018



121610490

50: SI • SI FL2 2T 91-93
R.O. 185869



121610500

50: Ciao PX 2T 80-04
R.O. 25523001



121610640

Foro Ø 10 mm | *Hole Ø 10 mm*
50: Liberty Poste
125: Liberty >05 Modello Poste | *Postal service model*
R.O. 647563



121610950

50: Liberty 4T 04-13
125: Liberty 4T 06-12
150: Liberty 4T 08-13
200: Liberty 4T 06-08 • Liberty RST 04
R.O. 600183



121610970

50: Vespa Sprint 4T 4V 14
R.O. 1C000274



121610980

50: Vespa Primavera 4T 4V 14
R.O. 1C000011



121610990

50: Vespa Primavera 2T 13-14
R.O. 1C000276



121611000

50: Vespa Sprint 2T 14
R.O. 1C000885



121611030

50: Ciao 1° serie
R.O. 10463101



121610140

125-150: Skipper 2T 94-97
R.O. 560011



121610330

125: Vespa ET4 • Sfera RST 96-98
R.O. 562593



121610670

Nero Ø 22 mm | *Black Ø 22 mm*
Ruota 10" | *Wheel 10"*
50-125: Vespa PK
V5X1T-V5X2T-V5S1T-VMX1T-VMX5T-VM6XT
R.O. 2162476



121610940

125: Vespa LX 4T 3V IE • Vespa Touring 12-13 • Vespa S 4T 3V IE 12-13
150: Vespa LX 4T 3V IE • Vespa Touring 12-13
R.O. 668451



121611010

125: Vespa LX 4T Euro3 Touring 10-11 • Vespa LX 4T FL 09 • Vespa LX Euro3 IE 09-11 • Vespa LX Euro3 06-08 • Vespa LX 05-06 • Vespa LXV 4T Euro3 06-09 • Vespa LXV 4T Navy Euro3 07-08 • Vespa LXV ie 4T 10-13 • Vespa S 4T Euro3 07-08 • Vespa S 4T ie & College 09-11
150: Vespa LX 4T FL 09 • Vespa LX Eu3 ie 09-11 • Vespa LX Euro3 06-08 • Vespa LX Touring 10-12 • Vespa LX 05-06 • Vespa S 4T ie & College 09- 12 • Vespa S 4T 08-09
R.O. 56467R



121611060

125: Liberty 2T Versione PTT
R.O. 581092



121610350

Nero Ø 20 mm | *Black Ø 20 mm*
Ruota 10" | *Wheel 10"*

50-90: Vespa
125: Vespa Primavera • Vespa ET3
V5A1-V5A2T-V5B1T-V3T-V9A1-VMA2-VMB1
R.O. 1353845



121610351

Zincato Ø 20 mm | *Galvanized Ø 20 mm*
Ruota 10" | *Wheel 10"*

50-90: Vespa
125: Vespa Primavera • Vespa ET3
V5A1-V5A2T-V5B1T-V3T-V9A1-VMA2-VMB1
R.O. 1353845



121610352

Cromato Ø 20 mm | *Chromed Ø 20 mm*
Ruota 10" | *Wheel 10"*

50-90: Vespa
125: Vespa Primavera • Vespa ET3
V5A1-V5A2T-V5B1T-V3T-V9A1-VMA2-VMB1
R.O. 1353845



PIAGGIO - VESPA

121610671

Zincato Ø 22 mm | *Galvanized Ø 22 mm*
Ruota 10" | *Wheel 10"*

50: Vespa PK • Vespa PK XL • Vespa FL • Vespa FL2
125: Vespa PK XL 86-89 • Vespa FL 89-90
V5X1T-V5X2T-V5S1T-VMX1T-VMX5T-VM6XT
R.O. 2162476



121610672

Cromato Ø 22 mm | *Chromed Ø 22 mm*
Ruota 10" | *Wheel 10"*

50: Vespa PK • Vespa PK XL • Vespa FL • Vespa FL2
125: Vespa PK XL 86-89 • Vespa FL 89-90
V5X1T-V5X2T-V5S1T-VMX1T-VMX5T-VM6XT
R.O. 2162476



121610830

Zincato Ø 16 mm | *Galvanized Ø 16 mm*
Ruota 9" | *Wheel 9"*

50: Vespa < 67
90: Vespa < 67
V5A-V5SA1-V9A
R.O. 070161



121610360

Nero Ø 22 mm | *Black Ø 22 mm*
Ruota 10" | *Wheel 10"*

125-150-200: Cosa 1 e 2
VSR1T-VNR2T-VLR2T
R.O. 2533615



121610370

Nero Ø 22 mm | *Black Ø 22 mm*
Ruota 10" | *Wheel 10"*

125-150-200: Vespa PX • Vespa PXE Arcobaleno
VNX-VLX-VSX-VNX2-VLX2-VSX2



121610371

Zincato Ø 22 mm | *Galvanized Ø 22 mm*
Ruota 10" | *Wheel 10"*

125-150-200: Vespa PX • Vespa PXE Arcobaleno
VNX-VLX-VSX-VNX2-VLX2-VSX2
R.O. 1761606



121610372

Cromato Ø 22 mm | *Chromed Ø 22 mm*
Ruota 10" | *Wheel 10"*

125-150-200: Vespa PX • Vespa PXE Arcobaleno
VNX-VLX-VSX-VNX2-VLX2-VSX2



121610380

Nero Ø 22 mm | *Black Ø 22 mm*
Ruota 10" | *Wheel 10"*

125-150-200: Vespa PX • Vespa PXE Arcobaleno
VNX-VLX-VSX-VNX2-VLX2-VSX2



121610790

Nero Ø 22 mm | *Black Ø 22 mm*
Ruota 10" | *Wheel 10"*

125: Vespa T5
VNX5T
R.O. 232904



121610800

Zincato Ø 20 mm | *Galvanized Ø 20 mm*
Ruota 8" | *Wheel 8"*

125: Vespa
VNB1-VNB2-VNB3-VNB4-VNB5
R.O. 54140



121610870

Zincato Ø 15 mm | *Galvanized Ø 15 mm*
Ruota 8" | *Wheel 8"*

125: Vespa 51-54
VM1T-VM2T-VL1T-VL2T
R.O. 017013



121610880

Zincato Ø 16 mm | *Galvanized Ø 16 mm*
Ruota 8" | *Wheel 8"*

125: Vespa
VNA1T-VNA2T-VNB1-VNB2-VBA1T-VBB1T
R.O. 083814



121610910

Zincato Ø 15 mm | *Galvanized Ø 15 mm*
Ruota 8" | *Wheel 8"*

125: Vespa



121611020

Zincato | *Galvanized*
Ruota 8" | *Wheel 8"*

125: Vespa U 53
VU1T



121610810

Zincato Ø 20 mm | *Galvanized Ø 20 mm*
Ruota 10" | *Wheel 10"*

150: Vespa M > 61
VNB2-VNB3-VNB4-VNB5-VNB6
R.O. 54141



121610860

Zincato Ø 15 mm | *Galvanized Ø 15 mm*
Ruota 10" | *Wheel 10"*

150: Vespa GS
VS4-VS5
R.O. 026452



121610900

Zincato Ø 15 mm | *Galvanized Ø 15 mm*
Ruota 10" | *Wheel 10"*

150: Vespa



121611051

Zincato Ø 20 mm | *Galvanized Ø 20 mm*
Ruota 10" | *Wheel 10"*

125: Vespa GT • Vespa GTR
150: Vespa GL • Vespa Sprint • Vespa Sprint Veloce
160: Vespa GS
180-200: Vespa Rally
VNL2-VLB1-VLA-VSE1
R.O. 091047



121611052

Cromato Ø 20 mm | *Chromed Ø 20 mm*
Ruota 10" | *Wheel 10"*

125: Vespa GT • Vespa GTR
150: Vespa GL • Vespa Sprint • Vespa Sprint Veloce
160: Vespa GS
180-200: Vespa Rally
VNL2-VLB1-VLA-VSE1
R.O. 091047



YAMAHA

121610200

50: Bump • Bw's
R.O. 4YBF71110000



121610220

50: Neo's • 106 R • Mach



121610230

Con staffa fissaggio modificata | *With modified fixing bracket*

50: Why
R.O. 5EUF71111000



121610240

50: Slider 00-02
R.O. 5JHF71110000



121610250

50: Bw's • Ng • Track • Bump



121610260

50: Aerox
100: Bw's '99-01



121610440

Con staffa fissaggio modificata | *With modified fixing bracket*

50: Aerox



121610450

Con staffa fissaggio modificata | *With modified fixing bracket*

50: Neo's



121610620

Con staffa fissaggio modificata | *With modified fixing bracket*

50: Why



SCOOTER CINESI - *CHINESE SCOOTERS*

121610840

Scooter Cinesi 50 4T - *Chinese Scooters 50 4T*



121610850

Scooter Cinesi 125 4T - *Chinese Scooters 125 4T*





121619010

KIT PERNO MOLLE CAVALLETTO CENTRALE | *CENTRAL STAND SPRING AND PIN KIT*

APRILIA 50-100-125-150: Scarabeo • SR 94-97 • Rally Gulliver • Sonic GP
BETA 50: Quadra • Ark



121619030

KIT PERNO MOLLE CAVALLETTO CENTRALE | *CENTRAL STAND SPRING AND PIN KIT*

APRILIA 125-150: Scarabeo • Leonardo



121619050

KIT PERNO MOLLE CAVALLETTO CENTRALE | *CENTRAL STAND SPRING AND PIN KIT*

PIAGGIO 125: Liberty 98-00 • Vespa ET4 96-99 • Sfera RST 95-97



121619060

KIT PERNO MOLLE CAVALLETTO CENTRALE | *CENTRAL STAND SPRING AND PIN KIT*

GILERA 125-180: Runner • Runner VX-VXR
PIAGGIO 50-125-150: Liberty 4T 00> • Vespa ET4 4T 99> • Skipper • Hexagon • Zip 4T



121619070

KIT MOLLE CAVALLETTO CENTRALE | *CENTRAL STAND SPRING SET*

KYMCO 125-150: People



121619080

KIT PERNO MOLLE CAVALLETTO CENTRALE | *CENTRAL STAND SPRING AND PIN KIT*

ITALJET 50: Pista
MBK 50: Booster 90-94 • Booster Spirit Road • NG • Rocket • Booster NG 00 • Stunt • Track
YAMAHA 50: Bump • Slider • Spy • Bw's Original • NG Bump



121619150

KIT MOLLE CAVALLETTO CENTRALE | *CENTRAL STAND SPRING SET*

HONDA 125-150: Sh



121619160

KIT MOLLE CAVALLETTO CENTRALE | *CENTRAL STAND SPRING SET*

HONDA 125-150: Chiocciola • Arobase



121619170

KIT PERNO MOLLE CAVALLETTO CENTRALE | *CENTRAL STAND SPRING AND PIN KIT*

GILERA 50: Typhoon • Stalker • Runner
PIAGGIO 50: Free • Liberty • Zip • Sfera • Quartz • Vespa ET2





121619180

PERNO CAVALLETTO CON SEEGER (124 mm) | *STAND PIN WITH SEEGER (124 mm)*

GILERA 50: DNA



121619190

PERNO CAVALLETTO CON SEEGER (124 mm) | *STAND PIN WITH SEEGER (124 mm)*
Versione 2005 | *Model 2005*

GILERA 50: Easy Moving • Runner • Stalker Storm • Typhoon
PIAGGIO 50: Free FL • NRG • NRG RST • Liberty • NTT • Sfera RST • Sfera Maquillage 2 • Vespa ET2 • Zip (Tutti i modelli - *All models*)



121619200

KIT PERNO MOLLE CAVALLETTO CENTRALE | *CENTRAL STAND SPRING AND PIN KIT*

KIMCO 125-150: Dink



121890010

MOLLA CAVALLETTO | *STAND SPRING*

MBK 50: Booster



121890020

MOLLA CAVALLETTO | *STAND SPRING*

PIAGGIO 50: Sfera • Liberty
PIAGGIO 125: Vespa ET4 95-00



121890030

MOLLA CAVALLETTO | *STAND SPRING*

PIAGGIO 50-90-125: Vespa Primavera ET3 • Vespa PX T5
R.O. 277269



121890040

MOLLA CAVALLETTO | *STAND SPRING*

PIAGGIO 50-125: Vespa PK • Vespa PK XL • Vespa PK XL Rush • Vespa FL
R.O. 2216255



121890050

MOLLA CAVALLETTO | *STAND SPRING*

PIAGGIO 125-150-200: Vespa PX • Vespa PXE Arcobaleno
R.O. 176169



121890060

KIT MOLLE CAVALLETTO CENTRALE | *CENTRAL STAND SPRING SET*

APRILIA 50: SR





121890080

MOLLA CAVALLETTO | *STAND SPRING*

PIAGGIO 125-150-200: Cosa
VLR1T-VLR-VSX2
R.O. 257430



121890090

MOLLA CAVALLETTO | *STAND SPRING*

PIAGGIO 125-150: Vespa PX T5
VNX5T
R.O. 176444



121890100

MOLLE CAVALLETTO | *STAND SPRINGS*

PIAGGIO 50: Ciao
R.O. 139136 - 139137



121890110

MOLLE CAVALLETTO | *STAND SPRINGS*

PIAGGIO 50: Si
R.O. 164166 - 164167



121830050

GOMMINO CAVALLETTO CENTRALE | *CENTRAL STAND RUBBER*

KYMCO 50-125-150-200: Agility • Agility RS • Agility Carry • Agility R16 • People S • Dink • Like • Super 8
KYMCO 250-300-500: People S • X-Citing • Downtown
R.O. 00166100



121830630

TAMPONE CAVALLETTO | *CENTRAL STAND BUFFER*

PIAGGIO 125-150-200: Vespa PX Euro2 • Vespa PX 30 Anni • Vespa PXE Arcobaleno • Vespa PX T5
VNX-VLX-VSX-VNX5T-VLR1T-VLR-VSR1
R.O. 174773



121830140

GOMMINI CAVALLETTO | *RUBBER PADS*
Diametro interno Ø20 mm | *Internal diameter Ø20 mm*

PIAGGIO 50-90-125: Vespa 50-90 • Vespa Primavera ET3 • Vespa Primavera
R.O. 135387 - 135388



121830150

GOMMINI CAVALLETTO | *RUBBER PADS*

PIAGGIO 50-125: Vespa PK • Vespa PK XL • Vespa Rush • Vespa N • Vespa FL
125-150-200: Vespa PX • Vespa PE
R.O. 176166



121830159

GOMMINI CAVALLETTO | *RUBBER PADS*
Confez. Industriale 100 Cp. | *Packing 100 pcs*

PIAGGIO 50-125: Vespa PK • Vespa PK XL • Vespa Rush • Vespa N • Vespa FL
125-150-200: Vespa PX • Vespa PE
R.O. 176166





121830540

GOMMINI CAVALLETTO | *RUBBER PADS*
Diametro interno Ø20 mm | *Internal diameter Ø20 mm*

PIAGGIO 125: Vespa GTR • Vespa TS
PIAGGIO 150: Vespa Sprint • Vespa Sprint Veloce • Vespa GL • Vespa Super
180-200: Vespa Rally
R.O. 54146 - 54147



121619130

COPPIA PIASTRINE CAVALLETTO CENTRALE | *CENTRAL STAND BRACKETS*

PIAGGIO 50-90-125: Vespa ET3 • Vespa Primavera
R.O. 135390 - 135391



121619140

COPPIA PIASTRINE CAVALLETTO CENTRALE | *CENTRAL STAND BRACKETS*

PIAGGIO 125-150-200: Vespa PX • Vespa PE
R.O. 176167 - 176168



121619210

COPPIA PIASTRINE CAVALLETTO CENTRALE | *CENTRAL STAND BRACKETS*

PIAGGIO 150: Vespa GL • Vespa Sprint
R.O. 59188 - 59189



121619220

COPPIA PIASTRINE CAVALLETTO CENTRALE | *CENTRAL STAND BRACKETS*

PIAGGIO 50: Vespa 1° Serie



121619230

COPPIA PIASTRINE CAVALLETTO CENTRALE | *CENTRAL STAND BRACKETS*

PIAGGIO 150: Vespa GS



121619250

COPPIA PIASTRINE CAVALLETTO CENTRALE | *CENTRAL STAND BRACKETS*

PIAGGIO 50-125: Vespa PK XL • Vespa PK • Vespa FL • Vespa PK XL Rush • Vespa N • Vespa HP
R.O. 233120 - 216252





121570050

PIAGGIO 50: Vespa PK FL2
R.O. 266303



121570080

PIAGGIO 50: Vespa Rush • Vespa N • Vespa PK
PIAGGIO 125: Vespa PK XL
R.O. 265752



121570090

Perno Ø16 mm | *Pin Ø16 mm*
Asse ruota Ø18 mm | *Wheel axle Ø18 mm*
PIAGGIO 125-150-200: Vespa PX 1° Serie (Fino al 1981 - *To 1981*)
R.O. 183435



121570100

Perno Ø20 mm | *Pin Ø20 mm*
Asse ruota Ø22 mm | *Wheel axle Ø22 mm*
PIAGGIO 125-150-200: Vespa PX 2° Serie (Dal 1982 - *To 1982*)
R.O. 178050



121570110

PIAGGIO 50: Vespa PK • Vespa PK XL
R.O. 244830



121570120

Perno Ø22 mm | *Pin Ø22 mm*
Asse ruota Ø22 mm | *Wheel axle Ø22 mm*
PIAGGIO 125-150-200: Vespa PX Arcobaleno
R.O. 216744



121570150

PIAGGIO 50-90: Vespa 50-90
PIAGGIO 125: Vespa Primavera ET3
R.O. 183678



121570170

Ruota 10" | *Wheel 10"*
PIAGGIO 150: Vespa Sprint
R.O. 152339



121570191

MBK 50: Booster NG 95-03 • Booster Rocket 97-98 • Nitro 97-00
YAMAHA 50: Bw'S NG 99-06 • Spy 95-98 • Aerox 97-02 • Aerox R 99-00
R.O. 5BRF33400200



121570461

HONDA 125-150: SH 01-12
R.O. 53219-KPR-900 • 53219-KPR-901



121570491

HONDA 125-150: SH ie 13-16
R.O. 53219-K01-900



121570480

HONDA 300: SH 07-15
R.O. 53219-KTW-900



121580070

Per Forcella KYB | *For KYB fork*

MBK 50: Booster Spirit 99-00
YAMAHA 50: Bw's Original 99-00
R.O. 4VUF31100000

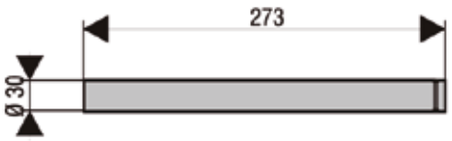

APRILIA

184220010
184220011

SUPERIORE | *UPPER*

50: Sport City One 2T 08-11
R.O. 56002R



184220020
184220021

INFERIORE | *LOWER*

50: Sport City One 2T 08-11
R.O. 56003R



184220100
184220101
184220013

COMPLETA | *COMPLETE*

50: Sport City One 2T 08-11
R.O. 56002R - 56003R



184220140

COMPLETA | *COMPLETE*

50: Area 51 98-00 • Gulliver 95-98 • Gulliver Lc 96-98 • Rally 95-03 • Rally Liquid Cooled 96-99 • Scarabeo 93-05 • Scarabeo Street 05-06 • Scarabeo Street 2T RST 06-09 • Scarabeo 2T Net 09-10 • Scarabeo 4T 4V Net 10-12 • SR 93-01 • SR Street 03-12 • SR Ditech Eu2 02-04 • SR H2O Ditech 00-04 • SR Liquid Cooled 94-96 • SR Stealth Racing 97-99
100: Scarabeo 4T 10-12 • Scarabeo 4T Net • Scarabeo Eu3 10
R.O. AP8203666



184220300

SUPERIORE | *UPPER*

50: Sport City One 4T 08-10 • SR Motard 4T 4V 13-14 • SR Motard 2T 12-14
125: Sport City One 4T Eu3 08-11 • SR Motard 12-14
R.O. CM061303



184220350

COMPLETA | *COMPLETE*

125: Leonardo 96-02 • Leonardo ST 01-04 • Sport City 04-06 • Scarabeo 03-06 • Scarabeo Eu 3 06-07 • Scarabeo Motore Rotax 99-04 • Sport City 04-06 • Sport City Eu 3 06-08 • Sport City Cube 08-10 • Sport City Street 12
150: Leonardo 96-02 • Scarabeo 96-02
200: Sport City 04-06 • Scarabeo 96-02
250: Leonardo 99-04 • Leonardo ST 01 • Sport City Cube 08-10
300: Sport City Street 12
500: Atlantic 01-04
R.O. AP8123794 - 8123685





184220450

COMPLETA | *COMPLETE*

250: Scarabeo Light 06-08
300: Scarabeo Light 09-10
400: Scarabeo Light 06-08
R.O. 6008725



CPI

184220380

COMPLETA | *COMPLETE*

50: Aragon 2T



184220480

COMPLETA | *COMPLETE*

50: Gtr Lc - Hussar - Oliver - Popcorn

DERBI

184220010

184220011

SUPERIORE | *UPPER*

50: GP1 Open Eu2 06-09
125: GP1 Eu2 06 • GP1 Low Seat Eu3 07-08
125-150: Boulevard 02-04 • Boulevard Eu3 04-07
200: Boulevard 05
250: GP1 06-07 • GP1 Low Seat Eu3 07-08
R.O. 56002R



184220020

184220021

INFERIORE | *LOWER*

50: GP1 Open Eu2 06-09
125: GP1 Eu2 06 • GP1 Low Seat Eu3 07-08
125-150: Boulevard 02-04 • Boulevard Eu3 04-07
200: Boulevard 05
250: GP1 06-07 • GP1 Low Seat Eu3 07-08
R.O. 56003R



184220100

184220101

184220013

COMPLETA | *COMPLETE*

50: GP1 Open Eu2 06-09
125: GP1 Eu2 06 • GP1 Low Seat Eu3 07-08
125-150: Boulevard 02-04 • Boulevard Eu3 04-07
200: Boulevard 05
250: GP1 06-07 • GP1 Low Seat Eu3 07-08
R.O. 56002R - 56003R



184220300

SUPERIORE | *UPPER*

50: Boulevard 2T 09-12 • Boulevard 4T Eu2 09
125: Variant Sport 4T E3 12
125-150: Boulevard 4T Eu3 08-12
R.O. CM061303



GILERA

184220010
184220011

SUPERIORE | *UPPER*

50: Easy Moving 95-96 • Ice 01-05 • Runner 97-00 • Runner Poggiali 02 • Runner Purejet 02-06 • Runner Sp 02-04 • Stalker 97-04 • Storm 94-95 • Typhoon 94-97 • Typhoon X 98-99 • Typhoon XR 00
125: Typhoon 95-98 • Typhoon X-XR 99-00
125-180: Runner FX-FXR 97-02
125-180-200: Runner VX VXR 00-04
R.O. 56002R



184220020
184220021

INFERIORE | *LOWER*

50: Easy Moving 95-96 • Ice 01-05 • Runner 97-00 • Runner Poggiali 02 • Runner Purejet 02-06 • Runner SP 02-04 • Stalker 97-04 • Storm 94-95 •Typhoon 94-97 •Typhoon X 98-99 •Typhoon XR 00
125: Typhoon 95-98 • Typhoon X-XR 99-00
125-180: Runner FX-FXR
125-180-200: Runner VX VXR 00-04
R.O. 56003R



184220100
184220101
184220013

COMPLETA | *COMPLETE*

50: Easy Moving 95-96 • Ice 01-05 • Runner 97-00 • Runner Poggiali 02 • Runner Purejet 02-06 • Runner Sp 02-04 • Stalker 97-04 • Storm 94-95 • Typhoon 94-97 •Typhoon X 98-99 •Typhoon XR 00
125: Typhoon 95-98 • Typhoon X-XR 99-00
125-180: Runner FX-FXR 97-02
125-180-200: Runner VX-VXR 00-04
R.O. 56002R - 56003R



184220300

SUPERIORE | *UPPER*

50: Runner Purejet 07 • Runner Purejet St 08 • Runner Sp 05-07 • Runner Sp Special Edition 07 • Runner Sp St & Simoncelli 08-09 • Stalker 05- 11 • Stalker Naked 08 • Stalker Special Edition 07-08 • Storm Eu2 07
125: Runner Vx 05-06 • Runner Vx 4T Eu3 06-07 • Runner Vx 4T St Eu3 08-10 • Runner Vx Race 06 • Runner Vx Sc 06-07
200: Runner Vxr 05-06 • Runner Vxr 4T St Eu3 08-09 • Runner Vxr Eu3 07 • Runner Vxr Race 06
500: Fuoco Eu3 07-11
R.O. CM061303



184220510

COMPLETA | *COMPLETE*

125: Nexus Eu3 Ie 08 • Nexus Eu3 07-08
300: Nexus Eu3 08
R.O. 6009215



184220520

COMPLETA | *COMPLETE*

500: Fuoco Eu3 07-13
R.O. 6019175





184220540

COMPLETA | *COMPLETE*
500: Fuoco 4T-4V Ie Eu3 13
R.O. 6670825



HONDA

184220170

COMPLETA | *COMPLETE*
50: Sky



184220180

COMPLETA | *COMPLETE*
50: SH 96>



184220260

COMPLETA | *COMPLETE*
110: Vision
125-150: @ • Dylan • SH • PCX • S-Wing • Forza



184220322

NTN

SUPERIORE | *UPPER*
400: Silver Wing
R.O. 91015-KT8-005



184220332

NTN

INFERIORE | *LOWER*
400: Silver Wing
R.O. 91016-MR7-003



184220342

184220340

COMPLETA | *COMPLETE*
400: Silver Wing



184220360

COMPLETA | *COMPLETE*
125-150: Pantheon 2T/4T
250: Foresight



184220370

COMPLETA | *COMPLETE*
300: SH 07-14



ITALJET

184220270

COMPLETA | *COMPLETE*
50-125-150: Torpedo



KYMCO

184220200

COMPLETA | *COMPLETE*
50: B&W 02 • Dink 98-02 • Dink Classic Eu2 03 • Heroism 95-97 • People 99
125: B&W 00 • B&W Eu2 00 • Dink 97-98 • Dink LX 98-00 • Grand Dink 01-02 • Heroism 95-97 • Movie 99-00 • Movie XL 01 • People 99-00 • People Eu2 03 • Vivio 00
150: B&W 00 • B&W Eu2 00 • Dink 97-98 • Dink LX 98-00 • Grand Dink 01-02 • Heroism 95-97 • Movie 99-00 • Movie XL 01 • People 99-00 • People Eu2 03 • Vivio 00
250: B&W 00 • Grand Dink 01-02 • People 03 • Yup 03



184220210

COMPLETA | *COMPLETE*
50: CX 93 • CX Super 94-97 • DJ W 94-00 • DJ X 91- 93 • Fever ZX 99-00 • Fever ZX Eu2 03-04 • Filly 98-00 • Filly LX 01-02 • K12 95-00 • KB 95-00 • Sniper 93-96 • Super 9 00 • Super 9 Sport Eu2 03-04 • Top Boy 97-00 • Vitality 2T 04 • Vitality 4T 04 • Yup 02 • Yup Eu2 03
R.O. 155027



184220322

NTN®

SUPERIORE | *UPPER*
125: Downtown I 09 • Gran Dink 12 • K-XCT 12 • People GTI 10
200: Downtown I 10 • People GTI 10
250: People S i 07 • People S 06 • Venox Eu3 07 • X-Citing I 05-07
300: Downtown Abs i 09-11 • Grand Dink 12 • K-XCT 12 • People GTI/Abs 10-12 • People S I 08 • X-Citing I/R 08-09
400: X-Citing 13
500: X-Citing /I/R 05-09
700: My Road I 11
R.O. 00155125





184220332

INFERIORE | *LOWER*

125: Downtown I 09 • Gran Dink 12 • K-XCT 12 • People GTI 10
200: Downtown I 10 • People GTI 10
250: People S 07 • People S 06 • Venox Eu3 07 • X-Citing I 05-07
300: Downtown I/Abs i 09-11 • Grand Dink 12 • K-XCT 12 • People GTI/Abs 10-12 • People S I 08 • X-Citing I/R 08-09
400: X-Citing I 13
500: X-Citing /I/R 05-09
700: My Road I 11
R.O. 00155125



184220342

184220340

COMPLETA | *COMPLETE*

125: Downtown I 09 • Gran Dink 12 • K-XCT 12 • People GTI 10
200: Downtown I 10 • People GTI 10
250: People S i 07 • People S 06 • Venox Eu3 07 • X-Citing I 05-07
300: Downtown I/Abs 09-11 • Grand Dink 12 • K-XCT 12 • People GTI/Abs 10-12 • People S I 08 • X Citing I/R 08-09
400: X-Citing I 13
500: X-Citing /I/R 05-09
700: My Road I 11
R.O. 00155125



184220460

COMPLETA | *COMPLETE*

50-125-150: Agility 08-12



MALAGUTI

184220230

SUPERIORE | *UPPER*

50: Ciak 99-00 • Ciak Master 04 • Ciak Master Eu2 06 • Ciak Mono Eu2 03 • Ciak Mono Eu2 2.3 03 • Ciak TD 00-01 • F10 AC 08 • F10 AC Eco 09 • F10 Jet Line 92-98 • F10 Kat 99-00 • F10 RST Eu1 01-02 • F10 RST Eu2-3 03-04 • F10 RST Eu2 06 • F10 RST Eu2 02-03 • Yesterday Euro 97-00



184220240

INFERIORE | *LOWER*

50: Ciak 99-00 • Ciak Master 04 • Ciak Master Eu2 06 • Ciak Mono Eu2 03 • Ciak Mono Eu2 2.3 03 • Ciak TD 00-01 • F10 AC 08 • F10 AC Eco 09 • F10 Jet Line 92-98 • F10 Kat 99-00 • F10 RST Eu1 01-02 • F10 RST Eu2-3 03-04 • F10 RST Eu2 06 • F10 RST Eu2 02-03 • Yesterday Euro 97-00



184220220

COMPLETA | *COMPLETE*

50: Ciak 99-00 • Ciak Master 04 • Ciak Master 4T 05-06 • Ciak Master Eu2 06 • Ciak Mono Eu2 03 • Ciak Mono Eu2 03 • Ciak TD 00-01 • F10 AC 08 • F10 AC Eco 09 • F10 Jet Line 92-98 • F10 Kat 99-00 • F10 RST Eu2-3 03-04 • F10 RST Eu2 06 • F10 RST Eu2 02-03 • Yesterday Euro 97-00



184220150

COMPLETA | *COMPLETE*

50: Crosser CR1 95-98 • F10 RST Eu1 01-02 • F12 Aria Rst Eu2 06 • F12 LC RST Eu2 06 • F12 Phantom 94-98 • F12 Phantom Eu1 99-00 • F12 Phantom LC 94-98 • F12 Phantom LC Eu1 99-00 • F12 Phantom LC RST Eu1 01-02 • F12 Phantom LC RST Eu2 02 • F12 Phantom LC RST Eu2-2.3 03-04 • F12 Phantom LC Twin Disks 98 • F15 Fire Fox 96-98 • F15 Fire Fox Air Cooled 05-06 • F15 Fire Fox Eu2 02-03 • F15 Fire Fox RST Eu2-3 03- 04 • F15 Fire Fox Twin Disks & Special 98-99 • F15 Fire Fox Twin Disks Digit Kat 98-00 • F15 LC RST Eu2 04-05 • F15 LC RST Eu1 01
R.O. 10401700



184220310

COMPLETA | *COMPLETE*

50: Centro 4T 08 • Centro SL 4T 10 • F12R Phantom AC 07-10 • F12R Phantom LC 07-10
100: Ciak 99-00
125: Blog IE 09-11 • Centro IE 08-09 • Centro SL IE 09-11 • Ciak 00-01 • Ciak Master 04 • Ciak Master Eu3 06 • Ciak RST Eu2 03 • F18 Warrior 00-02 • Madison 3 06-09 • Phantom Max 03
150: Ciak 00-02 • Ciak Master 04 • F18 Warrior 00-02 • Ciak Restyling Eu2 03
160: Blog IE 09-11 • Centro IE 09-11 • Centro SL IE 09
200: Ciak Master Eu2 06 • Phantom Max 03
250: Madison 3 06-09 • Phantom Max 04
R.O. 10403000



MBK

184220230

SUPERIORE | *UPPER*

50: Booster 90-04 • Booster Road 94-95 • Evolis 92-95 • Fizz 94-95 • Forte 94-96 • New Sorriso 95-96 • Nitro Jaguar 04 • Nitro 02-04 • Ovetto Eu1-Eu2 02- 04 • Sorriso 91-95 • Stunt 00-02 • Target 91-95 • Mach G 02-04
100: Booster 99-01 • Nitro 00-02
125: Flame/F/R 95-00 • Doodo 00-01 • Thunder 01-02 • Skyliner 98-03
150: Vertex 97 • Doodo 01-02 • Thunder 01-02 • Skyliner 00-02
180: Skyliner 03
250: Skyliner 00-03 • Skyliner Abs 03
300: Kilibre 03



184220240

INFERIORE | *LOWER*

50: Booster 90-04 • Booster Road 94-95 • Evolis 92-95 • Fizz 94-95 • Forte 94-96 • New Sorriso 95-96 • Ovetto 02-04 • Sorriso 91-95 • Target 91-95 • Mach G 02-04



184220150

COMPLETA | *COMPLETE*

50: Booster 90-04 • Booster Road 94-95 • Evolis 92-95 • Fizz 94-95 • Forte 94-96 • New Sorriso 95-96 • Mach 02-04 • Ovetto 02-04 • Sorriso 91-95 • Target 91-95



184220250

INFERIORE | *LOWER*

50: Nitro 02-04 • Nitro Eu2 03 • Stunt 00-02 • Nitro Jaguar 04
100: Nitro 00-02
125: Doodo 00-01 • Thunder 01-02 • Skyliner 98-03
150: Doodo 00-01 • Skyliner 00-02 • Thunder 01-02
180: Skyliner 03



184220280

COMPLETA | *COMPLETE*

50: Nitro 01-04 • Nitro Eu2 03 • Nitro Jaguar 04 • Stunt 00-02
100: Nitro 00-02
125: Doodo 00-01 • Skyliner 98-03 • Thunder 01-02
150: Doodo 01-02 • Skyliner 00-02 • Thunder 01-02 • Vertex 97
180: Skyliner 03



184220160

COMPLETA | *COMPLETE*

50: Booster 01-03 • Booster NG 95-03 • Booster NG Eu1 99-00 • Booster Naked 03 • Booster Rocket 97-98 • Booster Spirit 96-00 • Booster Spirit Eu2 02-03 • Booster Track 96-98 • Flipper 98-02 • Flipper Eu2 03-04 • Flipper Kat 99-00 • Ovetto 97-01 • Nitro 97-01
100: Ovetto 00-02



184220390

COMPLETA | *COMPLETE*

100: Booster 99-01
125: Flame F/R 95-00



184220430

COMPLETA | *COMPLETE*

300: Kilibre 03



PEUGEOT

184220180

COMPLETA | *COMPLETE*

50: Metropolis LM 91 • SV Geo 50 91-95
100: SV L 100 98
125: SV Geo 91-95
R.O. 704980



184220290

COMPLETA | *COMPLETE*

50: Elyseo 99 • Elystar 03-05 • Jetforce 03 • Looxor 01-03 • Ludix 04 • Speedfight 01-03 • Trekker 98-00 • Vivacity 99-00
100: Elyseo 00-01 • Looxor 01 • Speedfight 97-00 • X-Fight 00
125: Elystar 02-03 • Jetforce 03-04 • Looxor 02-03
150: Elystar 02-03 • Jetforce 03-04 • Looxor 02-03



184220550

COMPLETA | *COMPLETE*

125-250-400: Geopolis



184220560

COMPLETA | *COMPLETE*

50: Speedfight 3 • Kisbee • Kisbee U • Kisbee X •Viva 3L • 2T • 4T
125: Viva 3L 4T •Vivacity



PIAGGIO

184220010
184220011

SUPERIORE | *UPPER*

50: Fly 2T 05-07 • Liberty 97-05 • Liberty 2T Rst 04 • Liberty 4T 00-02 • Liberty 4T Rst 04 • Liberty Ptt Eu2 04-05 • Nrg 94-96 • Nrg Extreme 99-00 • Nrg Power Dd 05 • Nrg Power Purejet 04-05 • Nrg Purejet 02-04 • Nrg Rst Mc2 96-98 • Ntt 95-96 • Quartz 92-96 • Sfera 91-93 • Sfera Maquillage 2 94 • Sfera Rst 95-97 • Typhoon 01-04 • Vespa Et2 Iniez 97-00 • Vespa Et4 00-05 • Vespa LX 2T Touring 10 • Vespa LX 4T-4V Touring 10 • Vespa N 89-90 • Vespa PK Autom 84-89 • Vespa PK XL 85-88 • Vespa PK XL Plurimatic 85-90 • Vespa PK XL Rush 88-89 • Zip 00-04 • Zip 95-96 • Zip 4T 00-05 • Zip Bimodale 94-97 • Zip Fast Raider 93-94 • Zip Fast Raider Rst 96-97 • Zip Rst 96-99 • Zip Sp 96-04
80: Skr City 99
100: Free 02-03
125: Cosa 2 91-97 • Cosa Cl-Clx 88-91 • Hexagon 94-97 • Hexagon Gtx 00 • Hexagon LX-LXT 98-99 • Hexagon LX4 98-99 • Liberty 98-02 • Sfera 95-97 • Skipper 94-97 • Skipper 4T 00-02 • Skipper LX 98-99 • Super Hexagon Gtx 12” 01-02 • Vespa Et4 96-02 • Vespa PK XL 86-89 • Vespa PX Eu2 01-07 • Vespa S 4T Ie 09 • Zip 00-02
200: Liberty Rst 04
250: Hexagon Gt-Gtx 98-00 (R.O. 56002R)



184220020
184220021

INFERIORE | *LOWER*

50: Fly 2T 05-07 • Liberty 97-05 • Liberty 2T RST 04 • Liberty 4T 00-02 • Liberty 4T RST 04 • Liberty PTT Eu2 04-05 • NRG 94-96 • NRG Extreme 99-00 • NRG Power DD 05 • NRG Purejet 02-05 • NRG RST Mc2 96-98 • Quartz 92-96 • Sfera 91-93 • Sfera Maquillage 2 94 • Sfera RST 95-97 •Typhoon 01- 04 • Vespa ET2 Iniezione 97-00 • Vespa ET4 00-05 • Vespa LX 2T Touring 10 • Vespa LX 4T-4V Touring 10 • Vespa N 89-90 • Vespa PK Automatica 84-89 • Vespa PK XL 85-88 • Vespa PK XL Plurimatic 85-90 • Vespa PK XL Rush 88-89 • Zip 00-04 • Zip 95-96 • Zip 4T 00-05 • Zip Bimodale 94-97 • Zip Fast Rider 93-94 • Zip Fast Rider RST 96- 97 • Zip RST 96-99 • Zip Sp 96-04
80: Skr City 99
100: Free 02-03
125: Cosa 2 91-97 • Cosa CL-CLX 88-91 • Hexagon 94- 97 • Hexagon GTX 00 • Hexagon LX-LXT 98-99 • Hexagon LX4 98-99 • Liberty 98-02 • Sfera 95-97 • Skipper 94-97 • Skipper 4T 00-02 • Skipper LX 98-99 • Super Hexagon GTX 12” 01-02 • Vespa ET4 96-02 • Vespa PK XL 86-89 • Vespa PX Eu2 01-07 • Vespa S 4T Ie 09 • Zip 00-02
200: Liberty RST 04
250: Hexagon GT-GTX 98-00
R.O. 56003R



184220100
184220101
184220013

COMPLETA | *COMPLETE*

50: Fly 2T 05-07 • Liberty 97-05 • Liberty 2T RST 04 • Liberty 4T 00-02 • Liberty 4T RST 04 • Liberty PTT Eu2 04-05 • NRG 94-96 • NRG Extreme 99-00 • NRG Power DD 05 • NRG Purejet 02-05 • NRG RST Mc2 96-98 • NTT 95-96 • Quartz 92-96 • Sfera 91-93 • Sfera Maquillage2 94 • Sfera RST 95-97 • Typhoon 01-04 • Vespa ET2 Iniezione 97-00 • Vespa ET4 00-05 • Vespa LX 2T Touring 10 • Vespa LX 4T-4V Touring 10 • Vespa N 89-90 • Vespa PK Automatica 84-89 • Vespa PK XL 85-88 • Vespa PK XL Plurimatic 85-90 • Vespa PK XL Rush 88-89 • Zip 00-04 • Zip 95-96 • Zip 4T 00-05 • Zip Bimodale 94-97 • Zip Fast Rider 93-94 • Zip Fast Rider RST 96-97 • Zip RST 96-99 • Zip Sp 96-04
80: Skr City 99
100: Free 02-03
125: Cosa 2 91-97 • Cosa CL-CLX 88-91 • Hexagon 94-97 • Hexagon GTX 00 • Hexagon LX-LXT 98-99 • Hexagon LX4 98-99 • Liberty 98-02 • Sfera 95-97 • Skipper 94-97 • Skipper 4T 00-02 • Skipper LX 98-99 • Super Hexagon GTX 01-02 • Vespa ET4 96-02 • Vespa PK XL 86-89 • Vespa PX 01-07 • Vespa S 4T Ie 09 • Zip 00-02
200: Liberty RST 04
250: Hexagon GT-GTX 98-00
R.O. 56002R - 56003R





184220300

SUPERIORE | *UPPER*

50: Fly 4T 05-07 • Liberty 2T 06-08 • Liberty 2T Sport 06-08 • Liberty 4T 05-08 • Liberty Moc 4T & Elle 09-11 • NRG MC3 01-04 • NRG Power DD 06-10 • NRG Power DT 06-08 • NRG Power Pur Jet 06-09 • Typhoon 05-09 • Vespa 67-82 • Vespa ET2 97-05 • Vespa LX 2T 05-08 • Vespa LX 2T FL 09-10 • Vespa LX 4T 05-08 • Vespa LX 4T-4V 09 • Vespa LXV 2T 06-08 • Vespa LXV 2T Navy 08 • Vespa PK 82-84 • Zip 2T 08-10 • Zip 4T 06-08 • Zip SP 06-09
100: Fly 4T 06-07
125: Fly 05-07 • Liberty 4T 06-08 • Liberty 4T Eu3 Delivery 08 • Liberty 4T Sport Eu3 06-08 • Liberty RST PTT 05-11 • MP3 Ie 07-09 • Vespa Granturismo 03-07 • Vespa GTS Eu3 07-09 • Vespa GTV 07-08 • Vespa GTV 4T Navy Eu3 08 • Vespa LX 05-06 • Vespa LX 4T FL 09 • Vespa LX Eu3 06-08 • Vespa LXV 4T Eu3 06-09 • Vespa LXV 4T Navy Eu3 08 • Vespa PX 98-01 • Vespa PX 30 Anni 07-08 • Vespa PX T5 85-89 • Vespa PXE Arcobaleno 81-97 • Vespa S 4T Eu3 07-08
150: Fly 05-07 • Liberty 4T Eu3 08 • Liberty 4T Sport Eu3 08 • Liberty Moc 4T 09-10 • Vespa LX 05-06 • Vespa LX 4T FI 09 • Vespa LX Eu3 06-08 • Vespa S 4T 08-09
200: Liberty 06 • Liberty 4T Eu3 07-08 • Liberty 4T Sport Eu3 06-07 • Liberty Sport 06 • Vespa Granturismo 06-07
250: MP3 06-08 • MP3 Lt 09 • MP3 Mic 08-09 • Vespa GT 60 Eu3 06-07 • Vespa GTS Abs 05-10 • Vespa GTV 06-09 • Vespa GTV 4T Navy Eu3 08
300: MP3 300 Ie LT 10 • Vespa GTS Super 08-09
400: MP3 07-08 • MP3 Mic 08-09
R.O. CM061303



184220450

COMPLETA | *COMPLETE*

125: Beverly Eu3 07-08 • Beverly RST 4T 4V Ie Eu3 10-13 • Beverly Tourer Eu3 07-10 • Beverly Eu3 Mic /Sport 07-08 • Carnaby 07-10
200: Carnaby 07-08
250: Beverly 06-07 • Beverly Cruiser 07-09 • Beverly Eu3 Mic 07 • Beverly Ie Eu3 06-08 • Beverly Sport 06-08 • Beverly Tourer Eu3 08-09 • Carnaby 08
300: Beverly RST 4T 4V Ie Eu3 10-13 • Beverly Tourer Eu3 09-10 • Carnaby Cruiser 09-12
350: Beverly 4T 4V Ie Eu3 Sport 11-13
R.O. 6008725



184220510

COMPLETA | *COMPLETE*

125: X7 Eu3 08 • X7 Evo IE Eu3 09-10
250: X7 Eu3 08 • X Evo 07-13
300: X7 Evo IE Eu3 09-10
400: X8 Eu3 06-08
R.O. 6009215



184220110

COMPLETA | *COMPLETE*

50: Boss 88-89 • Bravo 3 87-90 • Bravo Erre 2 75-81 • SI 79-88 • SI FL2 91-97 • SI Mix 96-99 • Superbravo 3 87-90 • Superbravo 85-90
R.O. 564746
Con Dado Superiore Cod. 18 420 0020 | *With Open Nut Cod. 18 420 0020*
R.O. 249324



184220270

COMPLETA | *COMPLETE*

50: Boss 88-89 • Bravo 3 87-90 • Bravo erre 2 75- 81 • Free Delivery 00-01 • Free FL 95-02 • Free 92-94 • SI FL2 91-97 • SI Mix 96-99 • SI 79-88 • Superbravo 3 87-90 • Superbravo 85-90 • Zip 92-96
125: MP3 Ibrido 09
250: MP3 Mic 08-09 • MP3 06-08
400: MP3 Mic 08-11 • MP3 07-08
R.O. 564746



184220520

COMPLETA | *COMPLETE*

125: MP3 Ie 08-09 • MP3 Ibrido 09-10 • MP3 IE Touring 11-12 • MP3 06-08
250: MP3 LT 09 • MP3 Mic 08-09
300: MP3 IE LT 10-11 • MP3 IE Mic 10-11 • MP3 4T 4V IE LT Ibrido 10-11 • MP3 4T 4V IE Ibrido 10-13 • MP3 IE LT Touring 11-12 • MP3 IE LT IE Sport 11-13 • MP3 IE Touring 11-12
400: MP3 RL Touring 11 • MP3 07-08 • MP3 IE LT • Mp3 IE LT Sport 08-10 • MP3 IE LT Touring 11 • MP3 Mic 08-11
500: MP3 LT Sport Business 11-12
R.O. 601957



184220030

SUPERIORE | *UPPER*

50: Ape FL • Ape FL2 89-95 • Ape FL3 Europa 96-99 • Ape P 80-85 • Ape TMP 85-89 • Ape Mix 2T 98- 08
R.O. 493616



184220041 NEW

INFERIORE | *LOWER*

50: Ape FL • Ape FL2 89-95 • Ape FL3 Europa 96-99 • Ape P 80-85 • Ape TMP 85-89 • Ape Mix 2T 98-08
R.O. 493617



184220050

SUPERIORE | *UPPER*

220: Ape Car P2-P3 78-85 • Ape MP P501-P601 78-96
420: Ape Car Max Diesel 86-96
R.O. 153507



184220060 NEW

INFERIORE | *LOWER*

220: Ape MP P501-P601 78-96
R.O. 153508



184220071 NEW

INFERIORE | *LOWER*

220: Ape Car P2-P3 78-85
420: Ape Car Max Diesel 86-96
R.O. 154536



184220080

SUPERIORE | *UPPER*

220: Ape TM 09-12 • Ape TM P602 82-83 • Ape TM P703-P703V • Ape FL2 84-05
420: Ape TM D LCS 05-12 • Ape TM P703-P703V • Ape Diesel 87-04
R.O. 493618



184220090

INFERIORE | *LOWER*

220: Ape TM 09-12 • Ape TM P602 82-83 • Ape TM P703-P703V • Ape FL2 84-05
420: Ape TM D LCS 05-12 • Ape TM P703-P703V • Ape Diesel 87-04
R.O. 493619



184220540

COMPLETA | *COMPLETE*

125: MP3 Yourban 11-12
300: MP3 Yourban 11 • MP3 Yourban LT 11-12
R.O. 6670825



184220583

COMPLETA | *COMPLETE*

125: Vespa
VNA



184220570

COMPLETA | *COMPLETE*

50: Ciao
R.O. 814231



SCOOTER CINESI - *CHINESE SCOOTERS*

184220470

COMPLETA | *COMPLETE*

Baotian: BT50QT9-QT12



184220480

COMPLETA | *COMPLETE*

Baotian: BT 49 QT-18
Keeway: F-ACT 50 Flash



SUZUKI

184220400

COMPLETA | *COMPLETE*

125: Marauder 98-10 • Vanvan 03-10 • Burgman 02-10 • Intruder 00-07
150: Burgman 02-06
200: Burgman 07-10
250: Burgman 98-06 • Marauder 99-07 • Intruder 00-07
400: Burgman 99-06



SYM

184220490

COMPLETA | *COMPLETE*

50: Fiddle II 08 • Fiddle II S 09-13 • Jet 4 09-10 • Jet 4 R2T 11-13 • Symphony 09 • Symphony S 10-12 • Symphony SR 10-12 • Symply 07-08 • Symply II 09 • XPro 13
125: Fiddle II 08-10 • Jet V 11 • Jet 4 09-10 • Shark 99-02 • Symphony S 09-12 • Symphony SR 10-12 • Symphony 09 • Symply 07-08 • Symply II 09-10 • Vs Eu3 06-08 • XPro 13
150: Fiddle II 10-12 • Shark 00-01 • Symphony 09-12 • Symphony SR 10-12 • Vs / Eu3 06-08



184220500

COMPLETA | *COMPLETE*

250: Joymax Eu3 I 07-08
300: Joymax Evo 09 • Evo I 10



YAMAHA

184220230

SUPERIORE | *UPPER*

50: Aerox 02-11 • Aerox Eu2 03 • Axis 95-96 • Breeze 94-95 • CTS 90-95 • Jog Z 95 • Jog R 02-11 • Jor Eu2 02-05 • Neo'S 02-11 • Neo'S 4 09-11 • Slider 00-02 • Bw'S Naked 04-11 • Bw'S 04-11 • CRZ 91-95
100: Aerox 00-02 • Bw'S 99-01
125: Beluga 90-95 • Cygnus/R 95-03 • X City 08-10 • Maxster 01-02 • Majesty 98-09 • Teo's 00
150: Beluga 01-02 • Cygnus 01-02 • Flyone /R 90-98 • Majesty 00-02 • Maxster 01-02 • Teo'S 01-02
180: Majesty 03-06
250: X-City 07-13 • Majesty 96-03 • Majesty Dx 98-99 • Majesty Abs 03
300: Versity 03-06



184220240

INFERIORE | *LOWER*

50: Axis 95-96 • Bw'S Naked 04-11 • Bw'S 04-11 • Breeze 94-95 • CRZ 91-95 • CTS/SS 90-95 • Giggle 08 • Jog Z 95 • Jog Eu2 02-05 • Jog R 02-11 • Neo'S 02-11 • Neo'S Eu2 02-03 • Neo'S 4 09-11 • Slider 02



184220150

COMPLETA | *COMPLETE*

50: Axis 95-96 • Breeze 94-95 • Bw'S Naked 04- 11 • Bw'S 04-11 • CTS/SS 90-95 • CRZ 91-95 • Jog Z 95 • Jog R Eu2 02-05 • Jog R 02-11 • Neo'S 02-11 • Neo'S Eu2 02-03 • Neo'S 4 09-11 • Slider 02



184220250

INFERIORE | *LOWER*

50: Aerox 01-13 • Aerox Eu2 03 • Slider 00-02 • Aerox Naked 13
100: Aerox 00-02 • Slider 00-02
125: Majesty 01-05 • X-Max 07-09 • YZF-R 08-11
150: Majesty 01-02
180: Majesty 03-06
250: X Max 05-09 • Black X Max 09



184220280

COMPLETA | *COMPLETE*

50: Ew Slider 00-02 • Aerox 01-13 • Aerox Eu 2 03 • Aerox Naked 13
100: Aerox 00-02
125: Majesty 98-09 • Maxster 01-02 • Teo's 00
150: Majesty 00 • Maxster 01-02 • Teo's 01-02



184220160

COMPLETA | *COMPLETE*

50: Bw'S Bump 97-98 • Bw'S Naked 03 • Bw'S 03 • Bw'S Next Generation 97-06 • Next Generation Kat 99-00 • Bw'S Original Eu2 02-05 • Bw'S Original 97-02 • Bw'S R 01 • Spy 95-98 • Way 98-06 • Way Eu1/2 99-05 • Neo's 97-01 • Aerox R 97-02
100: Neo's 99-01



184220400

COMPLETA | *COMPLETE*

500: T-Max Abs 05-07 • T-Max 01-07 • T-Max Black Max / Night Max 06-07



184220410

COMPLETA | *COMPLETE*

500: T-Max 08-11 • T-Max Abs 08-11 • T-Max White Max 10



184220430

COMPLETA | *COMPLETE*

125: X-City 08-10
250: X-City 07-11
300: Versity 03-06



184220420

COMPLETA | *COMPLETE*

125: X-Max 10-11 • X-Max Abs 11
250: X-Max 10-11 • X-Max Abs Sport 11



184220390

COMPLETA | *COMPLETE*

100: Bw'S 99-01
125: Bw'S 10 • Beluga 90-95 • Cygnus SX 04-11 • Cygnus R 97-03 • Cygnus 95-98
150: Flyone 90-95 • Flyone R 97-98



184220440

COMPLETA | *COMPLETE*

125: X-Max 06-09
250: Black X-Max 09 • X-Max 05-09





GROSSE SFERE - *BALL SETS*

484120201

1 Conf. Grosse sfere 1/8" (Tot. 144 Pz.) | *1 Grs ball set 1/8" (Tot. 144 Pcs)*

484120211

1 Conf. Grosse sfere 5/32" (Tot. 144 Pz.) | *1 Grs ball set 5/32" (Tot. 144 Pcs)*

484120221

1 Conf. Grosse sfere 3/16" (Tot. 144 Pz.) | *1 Grs ball set 3/16" (Tot. 144 Pcs)*

484120231

1 Conf. Grosse sfere 1/4" (Tot. 144 Pz.) | *1 Grs ball set 1/4" (Tot. 144 Pcs)*

484120241

1 Conf. Grosse sfere 7/32" (Tot. 144 Pz.) | *1 Grs ball set 7/32" (Tot. 144 Pcs)*

484120251

1 Conf. Grosse sfere 5/16" (Tot. 144 Pz.) | *1 Grs ball set 5/16" (Tot. 144 Pcs)*

484120261

1 Conf. Grosse sfere 11/32" (Tot. 144 Pz.) | *1 Grs ball set 11/32" (Tot. 144 Pcs)*



GABBIETTE STERZO - *BALL CAGES*

184240010

GABBIETTE STERZO SUPERIORE SFERE 1/8" | *UPPER BALL CAGES*
Confezione 50 Pz. | *50 Pcs Packing*

PIAGGIO: Vespa
R.O. 077024

184240020

GABBIETTE STERZO INFERIORE SFERE 1/4" | *LOWER BALL CAGES*
Confezione 50 Pz. | *50 Pcs Packing*

PIAGGIO: Vespa
R.O. 077023

184240030

GABBIETTE SUPERIORI 5/32" | *UPPER BALL CAGES 5/32"*
Confezione 50 Pz. | *50 Pcs Packing*
Per ricambio serie 184220300 | *Spare Parts for 184220300*

PIAGGIO-GILERA









184240043

KIT GABBIETTE STERZO SFERE 1/4" ; 1/8" | *UPPER BALL CAGES*
Vespa Modelli vari | *Various Vespa Models*
PIAGGIO: R.O. 077023-077024



MINUTERIA METALLICA - *METAL PARTS*

184200020

DADO SUPERIORE STERZO PASSANTE | *STEERING UPPER NUT*
Confezione 5 Pz. | *5 Pcs Packing*
PIAGGIO: Si • Bravo P • Bravo 3
R.O. 249324





CONTACHILOMETRI

SPEEDOMETERS

163680004

Scala 80 Km/h | *80 Km/h scale*
Completo di trasmissione e pignoncino rocchetto | *With pinions and transmission*

PIAGGIO 50: Vespa N • Vespa L • Vespa R
R.O. 190743



163680014

Scala 80 Km/h | *80 Km/h scale*
Completo di trasmissione e pignoncino rocchetto | *With pinions and transmission*

PIAGGIO 50: Vespa Special Elestart
R.O. 123424



163680023

Scala 90 Km/h | *90 Km/h scale*

PIAGGIO 125: Vespa
VNA-VNB
R.O. 083205



163680033

Scala 100 Km/h | *100 Km/h scale*
Grigio | *Grey*

PIAGGIO 125: Vespa Struzzo



163680044

Scala 120 Km/h | *120 Km/h scale*
Completo di trasmissione e pignoncino rocchetto | *With pinions and transmission*

PIAGGIO 125: Vespa Primavera ET3 • Vespa GTR • Vespa TS
PIAGGIO 150: Vespa Sprint
PIAGGIO 200: Vespa Rally
R.O. 141712



163680053

Scala 100 Km/h | *100 Km/h scale*
Verde | *Green*

PIAGGIO 125-150: Vespa 55-56
VN1-VN2
R.O. 026098



163680063

Scala 90 Km/h | *90 Km/h scale*
Nero | *Black*

PIAGGIO 125-150: Vespa 125 (V30-V33) • Vespa 150 VL1-VL2-VL3-VM1-VN1



163680074

Scala 120 Km/h | *120 Km/h scale*
Completo di trasmissione e pignoncino rocchetto | *With pinions and transmission*

PIAGGIO 50-90: Vespa SS • Vespa 90 R
PIAGGIO 125-150: Vespa Primavera • Vespa Super
R.O. 121051



163680093

Scala 120 Km/h | *120 Km/h scale*
Completo di trasmissione e pignoncino rocchetto | *With pinions and transmission*

PIAGGIO 80: Vespa P • Vespa PX80E
PIAGGIO 150: Vespa P150X • Vespa P150S
PIAGGIO 200: Vespa PX200E • Vespa P200E
R.O. 190523



163680094

Scala 120 Km/h | *120 Km/h scale*
Completo di trasmissione e pignoncino rocchetto | *With pinions and transmission*

PIAGGIO 125-150-200: Vespa PX 1° Serie



163680104

Scala 60 Km/h | *60 Km/h scale*
Completo di trasmissione e pignoncino rocchetto | *With pinions and transmission*

PIAGGIO 50: Vespa N • Vespa L • Vespa R
PIAGGIO 90: Vespa S



163680114

Scala 100 Km/h | *100 Km/h scale*
Completo di trasmissione e pignoncino rocchetto | *With pinions and transmission*

PIAGGIO 150: Vespa 150 58-67 • Vespa GL
VBA-VBB-VGLA
R.O. 089377



163680123

Scala 120 Km/h | *120 Km/h scale*
Completo di trasmissione | *With transmission*

PIAGGIO 150-160: Vespa GS 59-61
VS5
R.O. 098473



163681003

Scala 80 Km/h | *80 Km/h scale*

INNOCENTI 125-150: Lambretta 2° Serie



163681013

Scala 100 Km/h | *100 Km/h scale*

INNOCENTI 125-150: Lambretta Li 2° Serie



163681023

Scala 120 Km/h | *120 Km/h scale*

INNOCENTI 125-150: Lambretta Li 2° Serie



163681033

Scala 100 Km/h | *100 Km/h scale*

INNOCENTI 125-150: Lambretta Li 3° Serie



163681043

Scala 120 Km/h | *120 Km/h scale*

INNOCENTI 125-150: Lambretta Li 3° Serie



163681053

Scala 140 Km/h | *140 Km/h scale*
INNOCENTI 125-150: Lambretta Li 3° Serie



163681063

Scala 100 Km/h | *100 Km/h scale*
INNOCENTI 125: Lambretta DL



163681073

Scala 120 Km/h | *120 Km/h scale*
INNOCENTI 150: Lambretta DL



163681083

Scala 140 Km/h | *140 Km/h scale*
INNOCENTI 200: Lambretta DL



163680203

CORNICE CONTACHILOMETRI | *SPEEDOMETER RING*

PIAGGIO 125: Vespa
VNA-VNB
R.O. 083204



163680213

CORNICE CONTACHILOMETRI | *SPEEDOMETER RING*

PIAGGIO 50: Vespa 50 Special
V5B3T
R.O. 610355M



163680223

CORNICE CONTACHILOMETRI | *SPEEDOMETER RING*

PIAGGIO 125: Vespa 125 (V30)



163680233

CORNICE CONTACHILOMETRI | *SPEEDOMETER RING*

PIAGGIO 50-90: Vespa 50-90
PIAGGIO 125: Vespa Primavera • Vespa TS • Vespa GTR • Vespa Super
PIAGGIO 150: Vespa Sprint
PIAGGIO 180-200: Vespa Rally
V5S-V9S-VMA-VM9-VNC-VBC
R.O. 151837



163680243

CORNICE CONTACHILOMETRI | *SPEEDOMETER RING*

PIAGGIO 125: Vespa GT 66-73 • Vespa GTR 68-78
PIAGGIO 150: Vespa GL • Vespa GS 58
PIAGGIO 160: Vespa GS
PIAGGIO 180: Vespa SS 65-68
VNL2-VLA-VBA-VBB-VS5-VSB-VSC
R.O. 084202



163680253

CORNICE CONTACHILOMETRI | *SPEEDOMETER RING*

PIAGGIO 150: Vespa 150 57-58 • Vespa GS 55-58
VB1-VS1-VS2-VS3-VS4
R.O. 024817



163680303

TRASPARENTE CONTACHILOMETRI | *SPEEDOMETER TRANSPARENT*

PIAGGIO 125-150: Vespa 55-56
VN1-VN2
R.O. 017713



163680313

TRASPARENTE CONTACHILOMETRI | *SPEEDOMETER TRANSPARENT*

PIAGGIO 150: Vespa 150 57-58 • Vespa GS 55-58
VB1-VS1-VS2-VS3-VS4
R.O. 024818



163680323

TRASPARENTE CONTACHILOMETRI | *SPEEDOMETER TRANSPARENT*

PIAGGIO 125: Vespa 125 57-65
VNA-VNB
R.O. 083202



163680333

TRASPARENTE CONTACHILOMETRI | *SPEEDOMETER TRANSPARENT*

PIAGGIO 125: Vespa GT 66-73 • Vespa GTR 68-78
PIAGGIO 150: Vespa GL • Vespa GS 58
PIAGGIO 160: Vespa GS
PIAGGIO 180: Vespa SS 65-68
VNL2-VLA-VBA-VBB-VS5-VSB-VSC
R.O. 084803



163680343

TRASPARENTE CONTACHILOMETRI | *SPEEDOMETER TRANSPARENT*

PIAGGIO 50-90: Vespa SS
PIAGGIO 125: Vespa Primavera ET3 • Vespa Super • Vespa GTR • Vespa TS
PIAGGIO 150: Vespa Super • Vespa Sprint
PIAGGIO 180-200: Vespa Rally
R.O. 100619



163680353

TRASPARENTE CONTACHILOMETRI | *SPEEDOMETER TRANSPARENT*

PIAGGIO 50: Vespa 50 Special
V5B3T
R.O. 610356M



142680410

COPERCHIO CONTACHILOMETRI | *SPEEDOMETER COVER*

PIAGGIO 50: Vespa 50 Special Elestart
R.O. 123678





163690100

Confezione 5 Pz. | *5 Pcs Packing*

HONDA 125-150: SH
R.O. 44800KPR900



163690030

12 Denti | *12 Teeth*
Confezione 5 Pz. | *5 Pcs Packing*

PIAGGIO 125-150-200: Vespa PX (Fino al 1981 - *Till 1981*)
R.O. 174048



163690040

12 Denti | *12 Teeth*
Confezione 5 Pz. | *5 Pcs Packing*

PIAGGIO 125-150-200: Vespa PX • Vespa PXE Arcobaleno • Cosa
R.O. 177508



163690050

8 Denti | *8 Teeth*
Confezione 5 Pz. | *5 Pcs Packing*

PIAGGIO 50-90: Vespa 50-90 • Vespa PK • Vespa PK XL
PIAGGIO 125: Vespa Primavera ET3
R.O. 151614



163690060

12 Denti | *12 Teeth*
Confezione 10 Pz. | *10 Pcs Packing*

PIAGGIO 50-125: Vespa PK • Vespa PK FL2 • Vespa PK XL • Vespa Rush • Vespa N
R.O. 217128



163690070

11 Denti | *11 Teeth*
Confezione 5 Pz. | *5 Pcs Packing*

PIAGGIO 125: Vespa 125 • Vespa Super
PIAGGIO 150: Vespa 150 63-66
VNB5-VNB6
R.O. 93535



163690080

9 Denti | *9 Teeth*

PIAGGIO 125: Vespa GT
PIAGGIO 150: Vespa Sprint • Vespa GL • Vespa GS 59-61
PIAGGIO 200: Vespa Rally
R.O. 98652



163690090

PIAGGIO 50-90-125: Vespa Primavera ET3
V5A2T-V5B1T-V5B3T V9A1-VMA2-VMB1
R.O. 151615





RINVII CONTACHILOMENTRI

SPEEDOMETERS GEARS

Modello *Model*	CC	Da *From*	A *To*	OEM	Codice RMS *RMS Code*
APRILIA					
Sport City One 2T	50	2008	2011	56434R	**163690130**
Sport City One 4T	50	2008	2010	56434R	**163690130**
Sr Motard 2T	50	2012	2014	56434R	**163690130**
Sr Motard 4T 4V	50	2013	2019	56434R	**163690130**
Sport City One 4T Euro3	125	2008	2011	56434R	**163690130**
Sr Motard	125	2012	2014	56434R	**163690130**
DERBI					
Boulevard 2T	50	2009	2014	56147R	**163690120**
Boulevard 4T Eu2 25 Km/H	50	2009	2009	56147R	**163690120**
Sonar 2T	50	2009	2009	56147R	**163690120**
Variant Sport 2T	50	2012	2012	56434R	**163690130**
Boulevard 4T	100	2010	2011	56147R	**163690120**
Boulevard 125-150	125	2002	2004	CM064502	**163690120**
Boulevard 125-150 Eu2	125	2004	2007	CM064502	**163690120**
Boulevard 4T Eu3	125	2008	2012	56147R	**163690120**
Sonar 4T	125	2009	2011	56147R	**163690120**
Variant Sport 4T E3	125	2012	2012	56434R	**163690130**
Boulevard 125-150	150	2002	2004	CM064502	**163690120**
Boulevard 125-150 Eu2	150	2004	2007	CM064502	**163690120**
Boulevard 4T E3	150	2010	2010	56147R	**163690120**
Sonar 4T	150	2009	2009	56147R	**163690120**
Boulevard Eu2	200	2005	2006	CM064502	**163690120**
GILERA					
Runner Poggiali	50	2002	2002	CM064502	**163690120**
Runner Purejet	50	2002	2004	56147R	**163690120**
Runner Sp	50	2002	2004	CM064502	**163690120**
Runner Fx-Fxr 125-180	125	1997	2002	56147R	**163690120**
Runner Vx-Vxr 125-180	125	2000	2001	CM064502	**163690120**
Runner Vx-Vxr 125-200	125	2002	2004	56147R	**163690120**
Runner Fx-Fxr 125-180	180	1997	2002	56147R	**163690120**
Runner Vx-Vxr 125-180	180	2000	2001	CM064502	**163690120**
Runner Vx-Vxr 125-200	200	2002	2004	56147R	**163690120**
HONDA					
Sh 125 D I	125	2009	2009	44800-KTF-641	**163690150**
Sh 125 I	125	2005	2012	44800-KTF-641	**163690150**
Sh 150 D I	150	2009	2011	44800-KTF-641	**163690150**
Sh 150 I	150	2005	2008	44800-KTF-641	**163690150**
PIAGGIO					
Fly 2T	50	2005	2007	56147R	**163690120**
Fly 2T	50	2010	2011	56147R	**163690120**
Fly 4T	50	2005	2007	56147R	**163690120**
Fly 4T & 25- 30 Km/H	50	2008	2011	56147R	**163690120**
Fly 4T Motore Chn	50	2006	2007	56147R	**163690120**
Liberty 2T	50	2006	2008	56147R	**163690120**
Liberty 2T Rst	50	2004	2004	56147R	**163690120**
Liberty 2T Sport	50	2006	2008	56147R	**163690120**
Liberty 4T	50	2005	2008	56147R	**163690120**
Liberty 4T Delivery Tnt	50	2009	2009	56147R	**163690120**
Liberty 4T Delivery-Single	50	2010	2012	56147R	**163690120**
Liberty 4T Ptt (Deu)	50	2007	2012	56147R	**163690120**
Liberty 4T Ptt-Double	50	2009	2012	56147R	**163690120**
Liberty 4T Rst	50	2004	2004	56147R	**163690120**
Liberty 4T Sport	50	2006	2008	56147R	**163690120**
Liberty Moc 2T & Elle	50	2009	2013	56147R	**163690120**
Liberty Moc 4T & Elle	50	2009	2013	56147R	**163690120**
Nrg Extreme	50	1999	2000	56147R	**163690120**
Nrg Mc3	50	2001	2004	56147R	**163690120**
Typhoon 2T Eu2	50	2010	2012	56434R	**163690130**
Typhoon 2T Eu3 Ch	50	2011	2011	56434R	**163690130**
Zip	50	2000	2004	56143R	**163690110**
Zip 2T	50	2008	2013	56143R	**163690110**
Zip 4T	50	2000	2013	56143R	**163690110**
Fly 4T	100	2006	2008	56147R	**163690120**
Zip 4T	100	2006	2010	56143R	**163690110**
Beverly Eu3	125	2007	2008	56147R	**163690120**
Beverly Eu3 Mic	125	2007	2007	56147R	**163690120**
Beverly Eu3 Sport	125	2007	2008	56147R	**163690120**
Beverly Rst	125	2004	2007	56147R	**163690120**
Beverly Tourer Eu3	125	2007	2010	56147R	**163690120**
Carnaby	125	2007	2010	56147R	**163690120**
Fly	125	2005	2007	56147R	**163690120**
Fly Eu3	125	2007	2011	56147R	**163690120**
Liberty 4T	125	2006	2007	56147R	**163690120**
Liberty 4T 2V Eu3	125	2009	2012	56147R	**163690120**
Liberty 4T 2V Ie Ptt	125	2012	2012	56147R	**163690120**
Liberty 4T Eu3	125	2007	2008	56147R	**163690120**
Liberty 4T Eu3 Delivery	125	2007	2012	56147R	**163690120**
Liberty 4T Sport Eu3	125	2006	2008	56147R	**163690120**
Liberty Rst	125	2004	2005	56147R	**163690120**
Liberty Rst Ptt	125	2005	2011	56147R	**163690120**
Liberty Sport	125	2006	2006	56147R	**163690120**
Skipper 4T	125	2000	2002	56147R	**163690120**
Skipper Lx	125	1998	1999	56147R	**163690120**
Super Hexagon Gtx 12	125	2001	2002	56147R	**163690120**
Typhoon 4T 2V Eu3	125	2010	2011	56434R	**163690130**
Fly	150	2005	2007	56147R	**163690120**
Fly Eu3	150	2008	2011	56147R	**163690120**
Liberty 4T Eu3	150	2008	2008	56147R	**163690120**
Liberty 4T Sport Eu3	150	2008	2008	56147R	**163690120**
Liberty Moc 4T Eu3	150	2009	2013	56147R	**163690120**
Carnaby	200	2007	2008	56147R	**163690120**
Liberty	200	2006	2006	56147R	**163690120**
Liberty 4T Eu3	200	2006	2008	56147R	**163690120**
Liberty 4T Sport Eu3	200	2006	2007	56147R	**163690120**
Liberty Rst	200	2004	2004	56147R	**163690120**
Liberty Sport	200	2006	2006	56147R	**163690120**
Beverly	250	2006	2007	56147R	**163690120**
Beverly Cruiser	250	2007	2009	56147R	**163690120**
Beverly Eu3 Mic	250	2007	2007	56147R	**163690120**
Beverly Ie Eu3	250	2006	2008	56147R	**163690120**
Beverly Rst	250	2004	2005	56147R	**163690120**
Beverly Sport	250	2006	2008	56147R	**163690120**
Beverly Tourer Eu3	250	2008	2009	56147R	**163690120**
Carnaby	250	2008	2008	56147R	**163690120**
Beverly Tourer Eu3	300	2009	2010	56147R	**163690120**
Carnaby Cruiser	300	2009	2012	56147R	**163690120**
Beverly Eu3	400	2006	2007	56147R	**163690120**
Beverly Tourer Eu3	400	2008	2010	56147R	**163690120**
Beverly	500	2002	2006	56147R	**163690120**
Beverly Cruiser	500	2007	2012	56147R	**163690120**
Beverly Eu3	500	2006	2008	56147R	**163690120**



163690110

PIAGGIO: R.O. 56143R



163690120

DERBI - GILERA - PIAGGIO: R.O. 56147R



163690130

ARPILIA - DERBI - PIAGGIO: R.O. 56434R



163690150 NEW

HONDA: R.O. 44800-KTF-641





CAVI TRASMISSIONE CONTACHILOMETRI - *SPEEDOMETER TRANSMISSION CABLES*

Modello *Model*	CC	Da *From*	A *To*	OEM	Codice RMS *RMS Code*
APRILIA					
Amico (Freno a Disco - *Disc Brake*)	50	1994	1994	AP8214110	**163630030**
Amico (Freno a Tamburo - *Brake Drum*)	50	1994	1994	AP8214169	**163630020**
Amico Gl-Gle (Freno a Disco - *Disc Brake*)	50	1993	1995	AP8214110	**163630030**
Amico Gl-Gle (Freno a Tamburo - *Brake Drum*)	50	1993	1995	AP8214169	**163630020**
Amico Lx-Sport-Cat (Freno Disco - *Disc Brake*)	50	1992	1993	AP8214110	**163630030**
Gulliver	50	1995	1998	AP8214142	**163630060**
Gulliver Lc	50	1996	1998	AP8214142	**163630060**
Mojito Custom	50	1999	2003	AP8214194	**163631350**
Mojito Custom 2T Motore Piaggio	50	2004	2010	AP8114472	**163631350**
Mojito Retro	50	1999	2003	AP8214186	**163631360**
Mojito Retro	50	1999	2003	AP8214210	**163631380**
Rally Liquid Cooled	50	1996	1999	AP8214165	**163630080**
Scarabeo	50	1993	2005	AP8214126	**163630070**
Scarabeo Street	50	2005	2006	AP8214126	**163630070**
Scarabeo Street 2T Restyling	50	2006	2009	AP8214126	**163630070**
Sonic	50	1998	2007	AP8214173	**163630100**
Sonic Gp	50	1998	2008	AP8214173	**163630100**
Sr	50	1993	1993	AP8214130	**163630050**
Sr	50	1994	1996	AP8214142	**163630060**
Sr Ditech Eu 2	50	2002	2004	AP8214163	**163630090**
Sr H2o Ditech E Carburatore	50	2000	2004	AP8214163	**163630090**
Sr Liquid Cooled	50	1994	1996	AP8214142	**163630060**
Sr Stealth, Racing	50	1997	2000	AP8214163	**163630090**
Sr Street	50	2003	2012	AP8214163	**163630090**
Sr Www	50	1997	2001	AP8214163	**163630090**
Leonardo	125	1996	2002	AP8114357	**163630110**
Leonardo St	125	2001	2004	AP8114357	**163630110**
Mojito	125	2003	2008	AP8114472	**163631350**
Mojito - Custom	125	1999	2001	AP8214194	**163631350**
Mojito Retro'	125	1999	2001	AP8214186	**163631360**
Mojito Retro - Custom	125	1999	2001	AP8214210	**163631380**
Scarabeo	125	2003	2006	AP8114357	**163630110**
Scarabeo Motore Piaggio Eu3	125	2006	2006	AP8114357	**163630110**
Scarabeo Motore Rotax	125	1999	2004	AP8114357	**163630110**
Sr	125	1999	2001	AP8214163	**163630090**
BENELLI					
491 Gt	50	1998	1999	R53410011A0	**163631200**
491 Racing	50	1998	1999	R53410011A0	**163631200**
491 Rr	50	1999	2001	R53410011A0	**163631200**
491 Rr Morini	50	2003	2004	R53410021A0	**163631190**
491 Sport	50	1998	1999	R53410011A0	**163631200**
491 St	50	1999	2001	R53410011A0	**163631200**
491 St Morini	50	2003	2003	R53410021A0	**163631190**
491Sp	50	1999	1999	R53410011A0	**163631200**
K2	50	1998	2001	R53410021A0	**163631190**
K2 Liquid Cooled	50	1998	2001	R53410021A0	**163631190**
BETA					
Ark Lc	50	-	-	2914220052	**163631220**
Eikon	50	-	-	2914221052	**163631210**

Modello *Model*	CC	Da *From*	A *To*	OEM	Codice RMS *RMS Code*
DERBI					
Atlantis	50	1999	2001	00G01605021	**163631520**
Atlantis 2T	50	2010	2010	00G01605021	**163631520**
Atlantis 2T Eu2	50	2007	2009	00G01605021	**163631520**
Atlantis 4T Eu2	50	2007	2007	00G01605021	**163631520**
Atlantis 50-100 4T	50	2004	2006	00G01605021	**163631520**
Atlantis Lc	50	1999	2001	00G01605021	**163631520**
Atlantis O2	50	2002	2002	00G01605021	**163631520**
Atlantis O2 Bullet	50	2003	2005	00G01605021	**163631520**
Atlantis O2 City	50	2003	2006	00G01605021	**163631520**
Atlantis O2 Red Bullet	50	2003	2003	00G01605021	**163631520**
Atlantis O2 Two Chic	50	2005	2005	00G01605021	**163631520**
Gp1	50	2001	2003	00G01606021	**163631600**
Gp1 E2	50	2003	2003	00G01606021	**163631600**
Predator Lc	50	1998	2001	00G01604021	**163631600**
Predator O2	50	1998	2001	00G01604021	**163631600**
Senda R	50	2000	2001	00H01612021	**163631590**
Senda Sm	50	2000	2001	00H01612021	**163631590**
Atlantis	100	2000	2001	00G01605021	**163631520**
GILERA					
Easy Moving	50	1995	1996	574331	**163630190**
Runner	50	1997	2000	561710	**163630220**
Stalker	50	1997	2011	561152	**163630210**
Stalker Special Edition	50	2007	2008	561152	**163630210**
Storm	50	1994	1995	563621	**163630180**
Typhoon (Da - *From* TEC1T 0065089)	50	1994	1997	563621	**163630180**
Typhoon (Fino a - *Till* TEC1T 0065088)	50	1994	1997	272353	**163630200**
Typhoon X	50	1998	1999	563621	**163630180**
Typhoon Xr	50	2000	2000	563621	**163630180**
Runner Fx-Fxr 125-180	125	1997	2002	563412	**163631240**
Runner Vx-Vxr 125-180	125	2000	2001	582413	**163631690**
Runner Vx-Vxr 125-200	125	2002	2004	582413	**163631690**
Typhoon	125	1995	1998	563621	**163630180**
Typhoon X-Xr	125	1999	2000	563621	**163630180**
HONDA					
Bali	50	1993	1996	44830GAV700	**163630290**
Sfx	50	1997	1999	44830GBM750	**163630300**
Sh	50	1985	1995	44830GJ3600	**163630260**
Sh	50	1996	1996	44830GBJ910	**163631230**
Sky	50	1999	2001	44830GCG930	**163630310**
Vision	50	-	-	44830GN2030	**163630320**
Bali	100	1996	1998	44830GAV700	**163630290**
Chiocciola	125	2002	2010	44830KGF900	**163631490**
FES 125 Pantheon	125	1998	2002	44830KFG000	**163630240**
Sh	125	-	-	44830KPR900	**163631530**
Chiocciola	150	2002	2010	44830KGF900	**163631490**
FES 150 Pantheon	150	1998	2002	44830KFG000	**163630240**
Sh	150	-	-	44830KPR900	**163631530**
FES 250 Foresight	250	1998	2005	44830KFG000	**163630240**
Foresight	250	1998	1998	44830KFG000	**163630240**
Jazz	250	2001	2004	44830KS4010	**163631500**
INNOCENTI					
Lambretta DL	125	1969	1971	00611125	**163631980**
Lambretta GP	125	1968	1971	00611125	**163631980**



Modello *Model*	CC	Da *From*	A *To*	OEM	Codice RMS *RMS Code*
Lambretta LI 125 Special	125	1965	1969	00611068	**163631970**
Lambretta LI 3° Serie	125	1961	1967	00611068	**163631970**
Lambretta LI 4° Serie	125	1967	1969	00611068	**163631970**
Lambretta DL	150	1969	1971	00611125	**163631980**
Lambretta GP	150	1968	1971	00611125	**163631980**
Lambretta LI 3° Serie	150	1962	1967	00611068	**163631970**
Lambretta LI Special 3° Serie	150	1963	1966	00611068	**163631970**
Lambretta X 150 Special 3° Serie	150	1966	1969	00611068	**163631970**
Lambretta TV 175 3° Serie	175	1962	1965	00611068	**163631970**
Lambreta X 200 Special 3° Serie	200	1966	1969	00611068	**163631970**
Lambretta DL	200	1969	1971	00611125	**163631980**
Lambretta GP	200	1968	1971	00611125	**163631980**
Lambretta TV 200 3° Serie	200	1963	1965	00611068	**163631970**
ITALJET					
Formula	50	-	-	-	**163630380**
KYMCO					
Agility 2T R16	50	2010	2010	00151323	**163631720**
Agility 2T R16	50	2012	2012	00151323	**163631720**
Agility 4T Carry	50	2011	2011	00151080	**163631710**
Agility 4T R10	50	2006	2008	00151100	**163631700**
Agility 4T R12	50	2007	2008	00151080	**163631710**
Agility 4T R16	50	2008	2009	00151323	**163631720**
Agility 4T R16	50	2012	2012	00151323	**163631720**
Agility Plus 2T	50	2014	2014	00151323	**163631720**
Agility Plus 4T	50	2014	2014	00151323	**163631720**
Agility R12	50	2005	2005	00151080	**163631710**
Dink Classic Eu2	50	2003	2003	00151914	**163631420**
Dink Lc	50	1998	2002	00151914	**163631420**
Heroism	50	1995	1997	00151720	**163630680**
Like 2T	50	2009	2009	00151080	**163631710**
Like 4T	50	2009	2009	00151080	**163631710**
People	50	1999	2000	00151303	**163631430**
People	50	2004	2004	00151303	**163631430**
People Eu2	50	2003	2003	00151303	**163631430**
People Eu2	50	2008	2008	00151303	**163631430**
People Eu2	50	2011	2011	00151303	**163631430**
People S	50	2005	2008	00151323	**163631720**
People S 4T	50	2006	2008	00151323	**163631720**
Super 8	50	2007	2007	00151323	**163631720**
Super 8 2T	50	2009	2009	00151323	**163631720**
Super 8 2T	50	2013	2013	00151323	**163631720**
Super 8 4T	50	2009	2009	00151323	**163631720**
Super 8 4T	50	2013	2013	00151323	**163631720**
Super 9	50	2000	2000	00151310	**163631540**
Super 9 Sport Eu2	50	2003	2003	00151310	**163631540**
Super 9 Sport Eu2	50	2004	2004	00151310	**163631540**
Agility 4T	125	2006	2006	00151080	**163631710**
Agility 4T Eu3	125	2006	2008	00151080	**163631710**
Agility Carry	125	2011	2011	00151080	**163631710**
Agility Plus	125	2014	2014	00151323	**163631720**
Agility R16	125	2008	2009	00151323	**163631720**
Agility R16	125	2012	2012	00151323	**163631720**
Dink 125-150	125	1997	1998	00151914	**163631420**
Dink Classic 125-150	125	2002	2002	00151914	**163631420**
Dink Classic 125-150 Eu2	125	2003	2003	00151914	**163631420**
Dink Lx 125-150	125	1998	2000	00151914	**163631420**

Modello *Model*	CC	Da *From*	A *To*	OEM	Codice RMS *RMS Code*
Grand Dink 125-150	125	2001	2002	00151171	**163631570**
Grand Dink 125-150 Eu2	125	2003	2004	00151171	**163631570**
Heroism	125	1995	1997	00151720	**163630680**
Like	125	2009	2009	00151080	**163631710**
Like Lx	125	2012	2012	00151080	**163631710**
Movie	125	1999	2000	00151117	**163631440**
People 125-150	125	1999	2000	00151303	**163631430**
People 125-150 Eu2	125	2003	2003	00151303	**163631430**
People Eu3	125	2007	2008	00151303	**163631430**
People Eu3	125	2011	2011	00151303	**163631430**
People S	125	2005	2005	00151323	**163631720**
People S Dd Eu3	125	2007	2008	00151323	**163631720**
Super 8	125	2008	2009	00151323	**163631720**
Vivio 125-150	125	2000	2000	00151117	**163631440**
Agility R16	150	2008	2009	00151323	**163631720**
Heroism	150	1995	1997	00151720	**163630680**
Agility 200I R16	200	2010	2010	00151323	**163631720**
Agility I Plus	200	2014	2014	00151323	**163631720**
Agility R16	200	2012	2012	00151323	**163631720**
Dink Classic	200	2004	2004	00151914	**163631420**
Like 200I	200	2009	2009	00151080	**163631710**
Like Lx	200	2012	2012	00151080	**163631710**
People S	200	2005	2005	00151323	**163631720**
People S 200I	200	2007	2007	00151323	**163631720**
B&W Eu2	250	2003	2003	00151171	**163631570**
Grand Dink	250	2001	2002	00151171	**163631570**
People Lc	250	2003	2004	00156398	**163631730**
People S	250	2006	2006	00156398	**163631730**
Venox	250	2002	2003	00152059	**163631740**
Venox Eu2	250	2004	2004	00152059	**163631740**
Venox Eu3	250	2007	2007	00152059	**163631740**
People S 300I	300	2008	2008	00156398	**163631730**
LIGIER					
Nova	500	2000	2000	980622	**163631750**
MALAGUTI					
Centro SL	50	1994	1998	17808900	**163630450**
Centro SL Kat	50	1999	2000	17808900	**163630450**
Ciak	50	1999	2000	17814400	**163630510**
Ciak Master	50	2004	2004	17814400	**163630510**
Ciak Master 4T	50	2005	2006	17814400	**163630510**
Ciak Master Eu 2	50	2006	2006	17814400	**163630510**
Ciak Mono Eu 2	50	2003	2003	17814400	**163630510**
Ciak Mono Eu 2 2.3	50	2003	2003	17814400	**163630510**
Ciak Td	50	2000	2001	17814400	**163630510**
Crosser Cr1	50	1995	1998	17810700	**163630480**
F10 Ac	50	2008	2008	17811600	**163630430**
F10 Ac Eco	50	2009	2010	17811600	**163630430**
F10 Jet Line (Modelli N/P/R/S/T)	50	1992	1997	17808100	**163630460**
F10 Jet Line (Modelli V/W)	50	1998	1998	17811600	**163630430**
F10 Kat	50	1999	2000	17811600	**163630430**
F10 Restyling Eu1	50	2001	2002	17811600	**163630430**
F10 Restyling Eu2	50	2002	2003	17811600	**163630430**
F10 Restyling Eu2	50	2006	2006	17811600	**163630430**
F10 Restyling Eu2-2.3	50	2003	2004	17811600	**163630430**
F12 Aria Restyling Eu 2	50	2006	2006	17813300	**163630440**
F12 Phantom	50	1994	1998	17809400	**163630470**
F12 Phantom Eu1	50	1999	2000	17813300	**163630440**
F12 Phantom Lc	50	1994	1998	17809400	**163630470**



CAVI TRASMISSIONE

TRANSMISSION CABLES

Modello *Model*	CC	Da *From*	A *To*	OEM	Codice RMS *RMS Code*
F12 Phantom Lc Eu1	50	1999	2000	17813300	**163630440**
F12 Phantom Lc Restyling Eu1	50	2001	2002	17813300	**163630440**
F12 Phantom Lc Restyling Eu2	50	2002	2002	17813300	**163630440**
F12 Phantom Lc Restyling Eu2-2.3	50	2003	2004	17813300	**163630440**
F12 Phantom Lc Twin Disks	50	1998	1998	17809400	**163630470**
F15 Fire Fox	50	1996	1998	17811400	**163630400**
F15 Fire Fox Air Cooled	50	2005	2006	17813300	**163630440**
F15 Fire Fox Twin Disks & Special	50	1998	1999	17811400	**163630400**
Ciak	100	1999	2000	17814400	**163630510**
F12 Phantom	100	1999	2000	17813300	**163630440**
Ciak	125	2000	2001	17814400	**163630510**
Ciak Master	125	2004	2004	17814400	**163630510**
Ciak Master Eu 3	125	2006	2006	17814400	**163630510**
Ciak Restyling Eu2	125	2003	2003	17814400	**163630510**
Madison	125	1999	2001	17814300	**163630500**
Madison R Restyling	125	2002	2002	17814300	**163630500**
Madison R Restyling Eu2	125	2003	2004	17814300	**163630500**
Ciak	150	2000	2002	17814400	**163630510**
Ciak Master	150	2004	2004	17814400	**163630510**
Ciak Restyling Eu2	150	2003	2003	17814400	**163630510**
Madison T	150	1999	2001	17814300	**163630500**
Ciak Master Eu 2	200	2006	2006	17814400	**163630510**
MBK					
Cw Booster	50	1990	1991	3VLH35500000	**163630540**
Cw Booster	50	2001	2002	4PAH35500200	**163631280**
Cw Booster (ITA)	50	1992	1994	3VLH35500000	**163630540**
Cw Booster Spirit	50	1996	1998	4PAH35500200	**163631280**
Cw Booster Spirit (ITA)	50	1999	2000	4PAH35500200	**163631280**
Cw Booster Spirit Eu2	50	2002	2003	4PAH35500200	**163631280**
Cw L Booster	50	2001	2003	4PAH35500200	**163631280**
Cw L Booster Spirit	50	2003	2003	4PAH35500200	**163631280**
Cw R Booster Road (ITA)	50	1994	1995	4PAH35500200	**163631280**
Cw Rs Booster Ng	50	2001	2003	4SBH35500300	**163631270**
Cw Rs Booster Ng (ITA)	50	1995	1999	4SBH35500300	**163631270**
Cw Rs Booster Ng Eu1	50	1999	2000	4SBH35500300	**163631270**
Cw Rsp Booster Rocket (ITA)	50	1997	1998	4SBH35500300	**163631270**
Cw Sp Booster Spirit Eu2	50	2002	2002	4PAH35500200	**163631280**
Ew Stunt	50	2000	2002	4SBH35500300	**163631270**
Ya R Forte (Che- ITA)	50	1994	1996	4PCH3550000	**163630610**
Yh Flipper	50	1998	1998	5EUH35500000	**163630620**
Yh Flipper	50	2001	2002	5EUH35500000	**163630620**
Yh Flipper Catalitico	50	1999	2000	5EUH35500000	**163630620**
Yh Flipper Eu2	50	2003	2004	5EUH35500000	**163630620**
Ym Fizz (ITA)	50	1994	1995	4PAH35500200	**163631280**
Yq L Nitro Jaguar	50	2004	2004	5PUH35500100	**163631140**
Yq Nitro	50	2004	2004	5BRH35500200	**163630520**
Yq Nitro (5PE2-5PE4)	50	2001	2002	5BRH35500200	**163630520**
Yq Nitro (5PE6)	50	2001	2002	5PUH35500200	**163631140**
Yq Nitro (ITA)	50	1997	1998	5BRH35500200	**163630520**
Yq Nitro (ITA)	50	1999	2000	5BRH35500200	**163630520**
Yq Nitro Eu2	50	2003	2003	5PUH35500100	**163631140**
Yq Nitro (5ME2 -5ME5)	100	2000	2002	5BRH35500200	**163630520**
Yq Nitro (5ME7)	100	2000	2002	5PUH35500200	**163631140**
Yw Booster	100	1999	2001	4VPH35500100	**163631290**
Yp Skyliner	125	1998	2000	5DSH35500000	**163631340**
Yp Skyliner	150	2000	2000	5DSH35500000	**163631340**

Modello *Model*	CC	Da *From*	A *To*	OEM	Codice RMS *RMS Code*
PEUGEOT					
Buxi	50	-	-	732615	**163630740**
Eliseo	50	-	-	740993	**163630790**
Geo	50	-	-	724335	**163630730**
Ludix 10	50	-	-	762744	**163631660**
Ludix 14	50	-	-	762745	**163631670**
Speedake	50	-	-	732615	**163630740**
Speedfight	50	-	-	736610	**163630770**
Trekker	50	-	-	736721	**163630800**
Viva City	50	-	-	739602	**163630810**
Zenith (Freno Tamburo / *Drum brake*)	50	-	-	-	**163630760**
Sv	125	-	-	724335	**163630730**
PGO					
Big Max	50	-	-	1544001000	**163630820**
PIAGGIO					
Boss	50	1988	1989	187423	**163630990**
Ciao	50	1980	1988	187423	**163630990**
Fly 2T	50	2005	2007	600315	**163631650**
Fly 2T	50	2010	2011	600315	**163631650**
Fly 4T	50	2005	2007	600315	**163631650**
Fly 4T & 25-30 Km/h	50	2008	2011	600315	**163631650**
Fly 4T Motore Chn	50	2006	2007	600315	**163631650**
Free	50	1992	1994	272352	**163630950**
Free Delivery	50	2000	2001	582414	**163631580**
Free Fl	50	1995	2002	272352	**163630950**
Grillo	50	1989	1993	187423	**163630990**
Liberty	50	1997	2005	560973	**163630960**
Liberty 2T	50	2006	2008	647804	**163631640**
Liberty 4T	50	2000	2002	560973	**163630960**
Liberty 4T	50	2005	2008	647804	**163631640**
Liberty 4T Delivery - Single	50	2010	2014	647804	**163631640**
Liberty 4T Ptt (Deu)	50	2007	2012	647803	**163631630**
Liberty Moc 2T & Elle	50	2009	2013	647804	**163631640**
Liberty Moc 4T & Elle	50	2009	2013	647804	**163631640**
Nrg	50	1994	1996	563621	**163630180**
Nrg Extreme	50	1999	2000	581287	**163630970**
Nrg Mc3	50	2001	2004	581287	**163630970**
Nrg Purejet	50	2002	2004	581287	**163630970**
Nrg Rst Mc2	50	1996	1998	563621	**163630180**
Ntt	50	1995	1996	563621	**163630180**
Quartz	50	1992	1996	268263	**163630890**
Sfera	50	1991	1993	266848	**163630870**
Sfera Maquillage 2	50	1994	1994	266848	**163630870**
Sfera Rst	50	1995	1997	562403	**163630880**
Typhoon	50	2001	2004	563621	**163630180**
Typhoon 2T Eu2	50	2010	2012	858542	**163632050**
Typhoon 2T Eu3 Ch	50	2011	2011	858542	**163632050**
Vespa 50 N - R - Special	50	1963	1983	071059	**163631010**
Vespa 50 S	50	1963	1984	183582	**163631960**
Vespa Et2	50	1997	2005	56116R	**163631020**
Vespa Et2 Iniezione	50	1997	2000	56116R	**163631020**
Vespa Et4	50	2000	2005	56116R	**163631020**
Vespa FL	50	1990	1990	266321	**163631030**
Vespa FL2 Automatica	50	1990	1991	266321	**163631030**
Vespa FL2 HP	50	1991	1997	266321	**163631030**
Vespa Lx 2T	50	2005	2008	649347	**163632110**
Vespa Lx 2T	50	2009	2013	649347	**163632110**



Modello *Model*	CC	Da *From*	A *To*	OEM	Codice RMS *RMS Code*
Vespa Lx 2T Touring & 30Km	50	2010	2013	649347	**163632110**
Vespa Lx 4T	50	2005	2008	649347	**163632110**
Vespa Lx 4T-4V	50	2009	2013	649347	**163632110**
Vespa Lx 4T-4V Touring	50	2010	2013	649347	**163632110**
Vespa Lxv 2T	50	2006	2009	650838	**163632080**
Vespa Lxv 2T Navy	50	2008	2008	650838	**163632080**
Vespa PK	50	1982	1984	195407	**163631040**
Vespa PK 50 S	50	1982	1986	179271	**163631060**
Vespa PK 50 S Elestart	50	1983	1986	179271	**163631060**
Vespa PK 50 SS	50	1983	1987	179271	**163631060**
Vespa PK N	50	1989	1990	195407	**163631040**
Vespa PK XL	50	1985	1988	195407	**163631040**
Vespa PK XL Rush	50	1985	1988	195407	**163631040**
Vespa S 2T & College	50	2007	2012	650836	**163632060**
Vespa S 4T-4V & College	50	2008	2012	650836	**163632060**
Zip	50	1992	1993	574331	**163630190**
Zip	50	1995	1996	574331	**163630190**
Zip	50	2000	2004	581321	**163631300**
Zip 2T	50	2008	2013	581321	**163631300**
Zip 4T	50	2000	2013	581321	**163631300**
Zip Bimodale	50	1994	1997	574331	**163630190**
Zip Fast Raider	50	1993	1994	574331	**163630190**
Zip Fast Raider Rst	50	1996	1997	581682	**163630920**
Zip Rst	50	1996	1999	581682	**163630920**
Zip Sp	50	1996	2004	582507	**163630930**
Zip Sp Eu2	50	2006	2013	649335	**163630930**
Skr City	80	1999	1999	266848	**163630870**
Vespa P80	80	1980	1983	174161	**163631050**
Vespa P80 E	80	1980	1983	174161	**163631050**
Vespa P80 X	80	1981	1983	174161	**163631050**
Vespa PK 80 S	80	1982	1986	179271	**163631060**
Vespa PX80 E	80	1981	1983	174161	**163631050**
Vespa PX80 E Arcobaleno	80	1983	1984	179271	**163631060**
Vespa 90	90	1963	1984	071059	**163631010**
Vespa SS	90	1965	1971	071059	**163631010**
Fly 4T	100	2006	2007	600315	**163631650**
Fly 4T	100	2008	2008	600315	**163631650**
Vespa PX100 E	100	1983	1984	179271	**163631060**
Vespa PX100 E	100	1983	1985	174161	**163631050**
Zip 4T	100	2006	2010	581321	**163631300**
Beverly Eu 3	125	2007	2008	648992	**163631620**
Beverly Eu 3 Mic	125	2007	2007	648992	**163631620**
Beverly Eu 3 Sport	125	2007	2008	648992	**163631620**
Beverly Rst	125	2004	2005	599866	**163631620**
Beverly Rst	125	2005	2007	648992	**163631620**
Beverly Tourer Eu3	125	2007	2010	648992	**163631620**
Carnaby	125	2007	2010	648929	**163631780**
Fly	125	2005	2007	600315	**163631650**
Fly Eu3	125	2007	2011	600315	**163631650**
Hexagon	125	1994	1997	274643	**163630980**
Hexagon Gtx	125	2000	2000	561279	**163631090**
Hexagon Lx4	125	1998	1999	561279	**163631090**
Hexagon Lx-Lxt	125	1998	1999	561279	**163631090**
Liberty	125	1998	2002	560973	**163630960**
Liberty 4T	125	2006	2007	647803	**163631630**
Liberty 4T Eu3	125	2006	2008	647803	**163631630**
Liberty 4T Eu3 Delivery - Single	125	2007	2015	647803	**163631630**
Liberty 4T Eu3 Delivery - Tnt	125	2008	2009	647803	**163631630**

Modello *Model*	CC	Da *From*	A *To*	OEM	Codice RMS *RMS Code*
Liberty Rst Ptt	125	2005	2011	647803	**163631630**
Sfera	125	1995	1997	562403	**163630880**
Skipper	125	1994	1997	268263	**163630890**
Typhoon 4T 2V Eu3	125	2010	2011	858542	**163632050**
Vespa 125	125	1965	1967	183582	**163631960**
Vespa 125 GT	125	1966	1973	099011	**163631900**
Vespa 125 GTR	125	1968	1978	099011	**163631900**
Vespa 125 Primavera	125	1967	1983	071059	**163631010**
Vespa 125 Primavera (att. rapido)	125	1967	1983	183582	**163631960**
Vespa 125 Primavera ET3 (att. rapido)	125	1976	1990	183582	**163631960**
Vespa 125 Super	125	1965	1969	099011	**163631900**
Vespa 125 TS	125	1975	1978	099011	**163631900**
Vespa 125 V30T-V33T	125	1950	1952	021151	**163632120**
Vespa 125 VNA1T - VNA2T	125	1957	1959	098641	**163631920**
Vespa 125 VNB1 - VNB6	125	1959	1966	098641	**163631920**
Vespa Cosa 1	125	1988	1991	229358	**163631070**
Vespa Cosa 2	125	1991	1997	229358	**163631070**
Vespa Et3	125	1982	1984	195407	**163631040**
Vespa Et4	125	1996	2002	56116R	**163631020**
Vespa FL	125	1989	1990	266321	**163631030**
Vespa Granturismo	125	2003	2007	651072	**163632100**
Vespa Granturismo Eu 3	125	2006	2007	599350	**163631610**
Vespa Gts 4T Ie Super	125	2009	2015	650849	**163632090**
Vespa Gts Eu3	125	2007	2012	599350	**163631610**
Vespa Gtv	125	2006	2008	650837	**163632070**
Vespa Gtv 4T Navy Eu3	125	2008	2008	650837	**163632070**
Vespa Lx	125	2005	2006	649347	**163632110**
Vespa Lx 4T 3V Ie - Touring	125	2012	2013	649347	**163632110**
Vespa Lx 4T Eu3 Touring	125	2010	2011	649347	**163632110**
Vespa Lx 4T FL	125	2009	2009	649347	**163632110**
Vespa Lx Eu 3	125	2006	2008	649347	**163632110**
Vespa Lx Eu 3 Ie	125	2009	2011	649347	**163632110**
Vespa Lxv 4T Eu3	125	2006	2009	650838	**163632080**
Vespa Lxv 4T Navy Eu3	125	2007	2008	650838	**163632080**
Vespa Lxv Ie 4T	125	2010	2013	650838	**163632080**
Vespa P125X	125	1977	1982	174161	**163631050**
Vespa PK	125	1982	1984	195407	**163631040**
Vespa PK 125 ETS	125	1984	1985	179271	**163631060**
Vespa PK XL	125	1986	1989	195407	**163631040**
Vespa PX 125 30 anni	125	2011	2011	563796	**163631250**
Vespa PX 125 E Millenium	125	1998	2005	563796	**163631250**
Vespa PX 125 Euro 2	125	2001	2007	563796	**163631250**
Vespa PX 125 T5	125	1985	1990	179271	**163631060**
Vespa PX 125 T5 Elestart	125	1986	1990	179271	**163631060**
Vespa PX125 E	125	1981	1997	174161	**163631050**
Vespa PX125 E Arcobaleno	125	1983	1997	179271	**163631060**
Vespa S 4T 3V Ie	125	2012	2012	650836	**163632060**
Vespa S 4T Eu 3	125	2007	2008	650836	**163632060**
X8	125	2005	2006	648572	**163631790**
X8 Premium Eu 2	125	2006	2006	648572	**163631790**
X8 Premium Eu 3	125	2006	2007	648572	**163631790**
X8 Street Eu 2	125	2006	2007	648572	**163631790**
Zip	125	2000	2002	582507	**163630930**
Fly	150	2005	2007	600315	**163631650**
Fly Eu3	150	2008	2011	600315	**163631650**
Liberty 4T Eu3	150	2008	2008	647803	**163631630**
Vespa 150	150	1959	1959	-	**163631930**



CAVI TRASMISSIONE

TRANSMISSION CABLES

Modello *Model*	CC	Da *From*	A *To*	OEM	Codice RMS *RMS Code*
Vespa 150 GL	150	1963	1963	097113	**163931910**
Vespa 150 Sprint Veloce	150	1969	1979	099011	**163631900**
Vespa 150 Super	150	1965	1979	099011	**163631900**
Vespa 150 VBA1T	150	1958	1960	098641	**163631920**
Vespa 150 VBB1 - VBB2	150	1960	1967	098641	**163631920**
Vespa Cosa 1	150	1987	1990	229358	**163631070**
Vespa Cosa 2	150	1991	1997	229358	**163631070**
Vespa GS	150	1955	1961	024190	**163632130**
Vespa Gts Super Ie 4T 3V	150	2014	2014	650849	**163632090**
Vespa Lx	150	2005	2006	649347	**163632110**
Vespa Lx 4T 3V Ie - Touring	150	2012	2013	649347	**163632110**
Vespa Lx 4T FL	150	2009	2009	649347	**163632110**
Vespa Lx Eu 3	150	2006	2008	649347	**163632110**
Vespa Lx Eu 3 Ie	150	2009	2011	649347	**163632110**
Vespa Lx Touring	150	2010	2012	649347	**163632110**
Vespa P150 S	150	1978	1990	174161	**163631050**
Vespa P150 S	150	1978	1990	099011	**163631900**
Vespa P150 X	150	1978	1981	174161	**163631050**
Vespa P200 X	150	1977	1982	174161	**163631050**
Vespa PX 150 E Millenium	150	1998	2011	563796	**163631250**
Vespa PX150 E	150	1981	1985	174161	**163631050**
Vespa PX150 E Arcobaleno	150	1983	1997	179271	**163631060**
Vespa PX200 E	150	1982	1986	174161	**163631050**
Vespa S 4T	150	2008	2009	650836	**163632060**
Vespa S 4T Ie & College	150	2009	2012	650836	**163632060**
Vespa Sprint	150	1965	1974	099011	**163631900**
Vespa GS	160	1962	1964	057045	**163631940**
Vespa 180 Rally	180	1968	1973	099011	**163631900**
Vespa 180 SS	180	1964	1968	090525	**163631050**
Carnaby	200	2007	2008	648929	**163631780**
Liberty	200	2006	2006	647803	**163631630**
Liberty Rst	200	2004	2004	647803	**163631630**
Vespa 200 Rally	200	1972	1979	099011	**163631900**
Vespa Cosa 1	200	1988	1991	229358	**163631070**
Vespa Cosa 2	200	1991	1997	229358	**163631070**
Vespa Granturismo	200	2006	2007	651072	**163632100**
Vespa P200 E	200	1977	1982	174161	**163631050**
Vespa PX 200 E Millenium	200	1998	2005	563796	**163631250**
Vespa PX200 E Arcobaleno	200	1983	1997	179271	**163631060**
Vespa Rally	200	1972	1979	090525	**163631050**
X8	200	2005	2007	648572	**163631790**
Beverly	250	2006	2007	648992	**163631620**
Beverly Eu 3 Mic	250	2007	2007	648992	**163631620**
Beverly Rst	250	2004	2005	599866	**163631620**
Beverly Tourer Eu3	250	2007	2009	648992	**163631620**
Carnaby	250	2008	2008	648929	**163631780**
Hexagon Gt-Gtx	250	1998	2000	561279	**163631090**
Vespa Gt 60 Eu 3	250	2006	2007	650837	**163632070**
Vespa Gts	250	2005	2014	650849	**163632090**
Vespa Gts Abs	250	2005	2012	601321	**163632090**
Vespa Gtv	250	2006	2009	650837	**163632070**
Vespa Gtv 4T Navy Eu3	250	2007	2007	650837	**163632070**
X8 Eu3	250	2005	2008	648572	**163631790**
Carnaby Cruiser	300	2009	2012	650950	**163632010**
Vespa Gts Ie & Touring	300	2012	2014	650849	**163632090**
Vespa Gts Ie Touring	300	2011	2012	650849	**163632090**
Vespa Gts Super	300	2008	2014	650849	**163632090**
Vespa Gts Super Sport	300	2010	2013	650849	**163632090**
Vespa Gtv 4T 4V Ie	300	2010	2013	650837	**163632070**
Vespa Gtv Via Montenapoleone	300	2010	2010	650837	**163632070**
Beverly Eu 3	400	2006	2007	599685	**163631770**
Beverly Tourer Eu3	400	2008	2010	599685	**163631770**
X8 Eu3	400	2006	2008	648572	**163631790**
Beverly	500	2002	2006	599685	**163631770**
Beverly Cruiser	500	2007	2012	649268	**163632020**
Beverly Eu 3	500	2006	2008	599685	**163631770**
SCOOTER CINESI					
Gy6	50	-	-	-	**163632030**
SUZUKI					
Ay A K5-K6	50	2005	2006	34910-35E00-000	**163631160**
Ay Ayw K1-K4	50	2001	2004	34910-35E00-000	**163631160**
Ay Ayw Katana V-Y	50	1997	2000	34910-35E00-000	**163631160**
SYM					
Dd	50	2002	2002	44830T47000	**163631810**
Dd Eu2	50	2003	2007	44830T47000	**163631810**
Fiddle III	50	2014	2014	44830ABA000	**163631880**
Jet	50	1999	2001	44830E69000	**163631840**
Jet Eu X Eu2	50	2003	2007	44830E69000	**163631840**
Jet4	50	2009	2010	44830ABA000	**163631880**
Jet4 R 2T	50	2011	2014	44830ABA000	**163631880**
Jungle	50	1999	2000	44830E69000	**163631840**
Mask	50	2000	2001	44830E69000	**163631840**
Mask Eu2	50	2003	2004	44830E69000	**163631840**
Mio	50	2006	2007	44830T47000	**163631810**
Mio	50	2009	2009	44830T47000	**163631810**
Red Devil	50	1999	1999	44830E69000	**163631840**
Simply II	50	2014	2014	44830ABA000	**163631880**
Super Fancy	50	1998	2000	44830H09000	**163631800**
Symply	50	2007	2008	44830ABA000	**163631880**
Symply II	50	2009	2009	44830ABA000	**163631880**
X Pro	50	2013	2013	44830ABA000	**163631880**
Jet	100	1999	2000	44830E69000	**163631840**
Mio Eu2	100	2005	2006	44830T47000	**163631810**
Mio Eu3	100	2007	2008	44830T47000	**163631810**
Attila	125	1999	2000	44830M91000	**163631840**
Eu Mx	125	2002	2002	44830H3A600	**163631860**
Eu Mx E2	125	2003	2004	44830H3A600	**163631860**
Fiddle II	125	2008	2008	44830ABA000	**163631880**
Fiddle II	125	2009	2009	44830ABA000	**163631880**
Fiddle II	125	2010	2013	44830ABA000	**163631880**
Fiddle III	125	2014	2014	44830ABA000	**163631880**
Hd Eu2	125	2003	2004	44830M96000	**163631820**
Hd Eu3	125	2007	2008	44830HHA000	**163631850**
Hd Evo	125	2005	2006	44830HHA000	**163631850**
Hd Evo Eu3	125	2007	2008	44830HHA000	**163631850**
Hd Evo Eu3	125	2010	2011	44830HHA000	**163631850**
Hd Evo Tamburo Eu3	125	2008	2009	44830HHA000	**163631850**
Jet V	125	2011	2011	44830E69000	**163631840**
Jet4	125	2009	2010	44830ABA000	**163631880**
Joyride	125	2001	2002	44830H9A000	**163631870**
Joyride Eu2	125	2005	2006	44830H9A000	**163631870**
Megalo	125	2006	2007	44830E69000	**163631840**
New Duke	125	2000	2001	44830M91000	**163631840**
Super Duke	125	1999	2002	44830H08010	**163631800**
Symply	125	2007	2008	44830ABA000	**163631880**
Symply II	125	2009	2010	44830ABA000	**163631880**



Modello *Model*	CC	Da *From*	A *To*	OEM	Codice RMS *RMS Code*
Symply II	125	2014	2014	44830ABA000	**163631880**
Vs	125	2006	2006	44830VS1100	**163631830**
Vs Eu3	125	2007	2008	44830VS1100	**163631830**
Attila	150	2000	2001	44830M91000	**163631840**
Eu Mx	150	2002	2002	44830H3A600	**163631860**
Eu Mx Eu2	150	2003	2004	44830H3A600	**163631860**
Joyride	150	2001	2002	44830H9A000	**163631870**
Shark	150	2000	2001	44830H3A600	**163631860**
Vs	150	2006	2006	44830VS1100	**163631830**
Vs Eu3	150	2007	2008	44830VS1100	**163631830**
Hd Eu2	200	2003	2004	44830E69000	**163631840**
Hd Eu3 I	200	2007	2007	44830HHA000	**163631850**
Hd Evo Eu2	200	2005	2006	44830HHA000	**163631850**
Hd Evo Eu3 I	200	2007	2007	44830HHA000	**163631850**
Hd Evo I Eu3	200	2010	2012	44830HHA000	**163631850**
Hd Evo I Tamburo Eu3	200	2008	2009	44830HHA000	**163631850**
Joyride	200	2003	2003	44830H9A000	**163631870**
Joyride Eu2	200	2003	2004	44830H9A000	**163631870**
TGB					
303-303 Rs-Hauk	50	-	-	-	**163631890**
YAMAHA					
Bw's	50	2004	2015	5WWH3550000	**163630530**
Bw's Next Generation	50	1997	2006	4SBH35500300	**163631270**
Bw's Next Generation Cat.	50	1999	2000	4SBH35500300	**163631270**
Bw's Original	50	1997	2002	4PAH35500200	**163631280**
Bw's Original Eu2	50	2003	2003	4PAH35500200	**163631280**
Cw Bw's Original Eu2	50	2002	2002	4PAH35500200	**163631280**
Cw L Bw's	50	2003	2003	4PAH35500200	**163631280**
Cw L Bw's	50	2004	2004	5WWH3550000	**163630530**
Cw Rs Spy	50	1995	1998	4SBH35500300	**163631270**
Cw Sp Bw's Original Eu2	50	2002	2002	4PAH35500200	**163631280**
Ew Slider	50	2000	2002	4SBH35500300	**163631270**
Yh Why	50	1998	1998	5EUH35500000	**163630620**
Yh Why	50	2001	2002	5EUH35500000	**163630620**
Yh Why	50	2006	2006	5EUH35500000	**163630620**
Yh Why Eu1	50	1999	2000	5EUH35500000	**163630620**
Yh Why Eu2	50	2003	2005	5EUH35500000	**163630620**
Ym Breeze	50	1994	1995	4PAH35500200	**163631280**
Yq Aerox	50	1997	1998	5BRH35500200	**163630520**
Yq Aerox	50	2001	2002	5BRH35500200	**163630520**
Yq Aerox	50	2004	2012	5PUH35500200	**163631140**
Yq Aerox R	50	1999	2000	5BRH35500200	**163630520**
Yq L Aerox Eu2	50	2003	2003	5PUH35500200	**163631140**
Bw's	100	1999	2001	4VPH35500300	**163631290**
Yn Neo's	100	1999	2002	5ADH355010000	**163630570**
Yq Aerox	100	2000	2002	5BRH355002000	**163630520**
Nxc Cygnus X	125	2004	2006	5MLH35500000	**163630550**
Nxc Cygnus X	125	2007	2011	5MLH35501000	**163630560**
Yp125 Majesty	125	1998	2000	5DSH3550000	**163631340**
Yp150 Majesty	150	2000	2000	5DSH3550000	**163631340**
Yp250 Majesty	250	1996	1998	4HC835500000	**163630630**
Yp250 Majesty Dx	250	1998	1998	4HC835500000	**163630630**
Yp250 Majesty Dx	250	1999	1999	4HC835500000	**163630630**



CAVI TRASMISSIONE GAS - *THROTTLE TRANSMISSION CABLES*

Modello *Model*	**CC**	**Da** *From*	**A** *To*	**Cavo Gas** *Gas Cable*	**Comando sdoppiatore** *Command Splitter*	**Sdoppiatore miscelatore** *Mixer Splitter*	**Sdoppiatore carburatore** *Carburettor Splitter*
APRILIA							
Amico	50	1994	1994	**163590020** (AP8214109)			
Amico	50	1996	1998	**163590020** (AP8214109)			
Amico Gl-Gle	50	1993	1995	**163590020** (AP8214109)			
Amico Lx- Sport-Cat	50	1992	1993	**163590020** (AP8214109)			
Gulliver	50	1995	1998	**163590050** (AP8214160)			
Gulliver Lc	50	1996	1998	**163590050** (AP8214160)			
Rally	50	1995	2003	**163590050** (AP8214160)			
Rally Liquid Cooled	50	1996	1999	**163590040** (AP8214167)			
Scarabeo	50	1993	2005	**163590030** (AP8214125)			
Scarabeo 2T Eu2 Motore Piaggio	50	2010	2012	**163597340** (AP8214242)			
Scarabeo 2T Net	50	2009	2010	**163597340** (AP8214242)			
Scarabeo Street	50	2005	2006	**163597340** (AP8214242)			
Scarabeo Street 2T Restyling	50	2006	2009	**163597340** (AP8214242)			
Sonic	50	1998	2007	**163590330** (AP8214172)			
Sonic Gp	50	1998	2008	**163590330** (AP8214172)			
Sr	50	1993	1996	**163590020** (AP8214109)			
Sr Liquid Cooled	50	1994	1996	**163590020** (AP8214109)			
Sr Stealth, Racing	50	1997	2000	**163590060** (AP8214162)			
Sr Www	50	1997	2001	**163590060** (AP8214162)			
Leonardo	125	1996	1998	**163590200** (AP8114299)			
Leonardo	125	1999	2002	**163590660** (AP8114388)			
Leonardo St	125	2001	2004	**163590660** (AP8114388)			
Scarabeo Motore Rotax	125	1999	2004	**163590370** (AP8114382)			
Sr	125	1999	2001	**163592220** (AP8114380)			
Leonardo	250	1999	2004	**163590440** (AP8114369)			
Leonardo St	250	2001	2001	**163590440** (AP8114369)			
GILERA							
Dna	50	2000	2002			**163595150** (582449)	
Dna	50	2005	2007			**163595150** (582449)	
Dna Gp Experience	50	2003	2004			**163595150** (582449)	
Easy Moving	50	1995	1996	**163592150** (268435)		**163595040** (271829)	**163597020** (268402)
Ice	50	2001	2005				**163597300** (583334)



Modello *Model*	**CC**	**Da** *From*	**A** *To*	**Cavo Gas** *Gas Cable*	**Comando sdoppiatore** *Command Splitter*	**Sdoppiatore miscelatore** *Mixer Splitter*	**Sdoppiatore carburatore** *Carburettor Splitter*
Runner	50	1997	2000	**163592030** (562583)		**163595030** (268403)	**163597030** (581173)
Runner (Freno a disco - *Brake disc model*)	50	1997	2000	**163592270** (563878)			
Runner Poggiali	50	2002	2002	**163592270** (563878)			
Runner Purejet	50	2002	2004	**163592270** (563878)		**163595030** (268403)	
Runner Sp	50	2002	2004	**163592270** (563878)		**163595030** (268403)	
Runner Sp Special Edition	50	2007	2007			**163595030** (268403)	
Stalker	50	1997	2004	**163592450** (561149)		**163595030** (268403)	
Stalker	50	2005	2006	**163592450** (561149)		**163595030** (268403)	
Stalker	50	2007	2008	**163592450** (561149)		**163595030** (268403)	
Stalker	50	2009	2011	**163592450** (561149)		**163595030** (268403)	
Stalker Naked	50	2008	2008			**163595030** (268403)	
Stalker Special Edition	50	2007	2008	**163592450** (561149)			
Storm	50	1994	1995			**163595010** (272290)	**163597010** (272289)
Storm Eu2	50	2007	2007		**163592240** (581539)	**163595150** (582449)	
Typhoon	50	1994	1997			**163595010** (272290)	**163597010** (272289)
Typhoon X	50	1998	1999			**163595010** (272290)	**163597010** (272289)
Typhoon Xr	50	2000	2000			**163595010** (272290)	**163597010** (272289)
Runner Fx-Fxr 125	125	1997	2002	**163592270** (563878)		**163595150** (582449)	**163597210** (563213) Dell'Orto
Runner Fx-Fxr 125	125	1997	2002				**163597200** (563213) Mikuni
Runner Fx-Fxr 125-180	125	2001	2002	**163592030** (562583)		**163595150** (582449)	**163597210** (563213) Dell'Orto
Typhoon	125	1995	1998			**163595010** (272290)	
Typhoon X-Xr	125	1999	2000			**163595010** (272290)	
Runner Fx-Fxr 180	180	1997	2002	**163592270** (563878)		**163595150** (582449)	**163597210** (563213) Dell'Orto
Runner Fx-Fxr 180	180	1997	2002				**163597200** (563213) Mikuni
HONDA							
Sgx Sky	50	1997	2001	**163590160** (17910GCG930)			
Chiocciola Nes	125	2006	2006	**163590460** (17910KGF900)			
Sh	125	2006	2006	**163590460** (17910KGF900)			
Chiocciola Nes	150	2006	2006	**163590460** (17910KGF900)			
Sh	150	2006	2006	**163590460** (17910KGF900)			
MALAGUTI							
Ciak Master	50	2004	2004		**163592060** (03407803)		
Ciak Mono Eu2 2.3	50	2003	2003		**163592060** (03407803)		



CAVI TRASMISSIONE

TRANSMISSION CABLES

Modello *Model*	**CC**	**Da** *From*	**A** *To*	**Cavo Gas** *Gas Cable*	**Comando sdoppiatore** *Command Splitter*	**Sdoppiatore miscelatore** *Mixer Splitter*	**Sdoppiatore carburatore** *Carburettor Splitter*
F10 Jet Line	50	1992	1998	**163590080** (03408003)			
F10 Kat	50	1999	2000	**163590080** (03408003)			
F10 Restyling Eu1	50	2001	2002	**163590080** (03408003)			
F10 Restyling Eu2	50	2002	2003	**163590080** (03408003)			
F10 Restyling Eu2	50	2006	2006	**163590080** (03408003)			
F12 Aria Restyling Eu2	50	2006	2006	**163590080** (03408003)			
F12 Lc Restyling Eu2	50	2006	2006	**163590080** (03408003)			
F12 Phantom	50	1994	1998	**163590080** (03408003)	**163592060** (03407803)		
F12 Phantom Eu1	50	1999	2000	**163590080** (03408003)			
F12 Phantom Lc	50	1994	1998	**163590080** (03408003)	**163592060** (03407803)		
F12 Phantom Lc Eu1	50	1999	2000	**163590080** (03408003)			
F12 Phantom Lc Restyling Eu1	50	2001	2002	**163590080** (03408003)			
F12 Phantom Lc Restyling Eu2	50	2002	2002		**163592060** (03407803)		
F12 Phantom Lc Restyling Eu2-2.3	50	2003	2004		**163592060** (03407803)		
F12 Phantom Lc Twin Disks	50	1998	1998	**163590080** (03408003)			
F12 Phantom Restyling Eu1	50	2001	2002	**163590080** (03408003)			
F12 Phantom Restyling Eu2	50	2002	2002	**163590080** (03408003)			
F12 Phantom Restyling Eu2-2.3	50	2003	2004		**163592060** (03407803)		
F15 Fire Fox	50	1996	1998	**163590080** (03408003)			
F15 Fire Fox Air Cooled	50	2005	2006	**163590080** (03408003)			
F15 Fire Fox Eu2	50	2002	2003		**163592060** (03407803)		
F15 Fire Fox Restyling Eu2-2.3	50	2003	2004		**163592060** (03407803)		
F15 Fire Fox Twin Disks & Special	50	1998	1999	**163590080** (03408003)			
F15 Fire Fox Twin Disks Digit Kat	50	1998	2000	**163590080** (03408003)			
F15 Lc Restyling Eu2	50	2004	2005	**163590080** (03408003)			
F15 Lc-Tds Restyling Eu1	50	2001	2001	**163590080** (03408003)			
Yesterday - Yesterday Eu	50	1997	2000	**163590080** (03408003)			
MBK							
Cr Z Target	50	1991	1995				**163597100** (3GFF63120000)
Ct S Sorri So	50	1991	1992		**163592090** (1NTF63110000)		
Ct Ss Sorri So	50	1993	1995		**163592090** (1NTF63110000)		
Cw Booster	50	1990	1991		**163592070** (3VLF63110100)		**163597060** (3VFL63120100)
Cw Booster	50	2001	2002		**163592070** (3VLF63110100)		**163597060** (3VFL63120100)
Cw Booster	50	2004	2004	**163597320** (5WWF63120000)	**163592070** (3VLF63110100)		



Modello *Model*	**CC**	**Da** *From*	**A** *To*	**Cavo Gas** *Gas Cable*	**Comando sdoppiatore** *Command Splitter*	**Sdoppiatore miscelatore** *Mixer Splitter*	**Sdoppiatore carburatore** *Carburettor Splitter*
Cw Booster (Ita)	50	1992	1994		**163592070** (3VLF63110100)		**163597060** (3VFL63120100)
Cw Booster Naked	50	2003	2003		**163592070** (3VLF63110100)		**163597060** (3VFL63120100)
Cw Booster Spirit	50	1996	1998		**163592070** (3VLF63110100)		**163597060** (3VFL63120100)
Cw Booster Spirit (Ita)	50	1999	1999		**163592070** (3VLF63110100)		**163597060** (3VFL63120100)
Cw Booster Spirit (Ita)	50	2000	2000		**163592070** (3VLF63110100)		**163597060** (3VFL63120100)
Cw Booster Spirit Eu2	50	2002	2002		**163592070** (3VLF63110100)		**163597060** (3VFL63120100)
Cw Booster Spirit Eu2	50	2003	2003		**163592070** (3VLF63110100)		**163597060** (3VFL63120100)
Cw L Booster	50	2001	2003		**163592070** (3VLF63110100)		**163597060** (3VFL63120100)
Cw L Booster Spirit	50	2003	2003		**163592070** (3VLF63110100)		**163597060** (3VFL63120100)
Cw R Booster Road (Ita)	50	1994	1995		**163592070** (3VLF63110100)		**163597060** (3VFL63120100)
Cw Rs Booster Ng	50	2001	2002		**163592070** (3VLF63110100)		**163597060** (3VFL63120100)
Cw Rs Booster Ng	50	2003	2003		**163592070** (3VLF63110100)		**163597060** (3VFL63120100)
Cw Rs Booster Ng (Ita)	50	1995	1998		**163592070** (3VLF63110100)		**163597060** (3VFL63120100)
Cw Rs Booster Ng (Ita)	50	1999	1999		**163592070** (3VLF63110100)		**163597060** (3VFL63120100)
Cw Rs Booster Ng Euro1	50	1999	2000		**163592070** (3VLF63110100)		**163597060** (3VFL63120100)
Cw Rsp Booster Rocket (Ita)	50	1997	1998		**163592070** (3VLF63110100)		**163597060** (3VFL63120100)
Cw Rsx Booster Track (Ita)	50	1996	1998		**163592070** (3VLF63110100)		**163597060** (3VFL63120100)
Cw Sp Booster Spirit Eu2	50	2002	2002		**163592070** (3VLF63110100)		**163597060** (3VFL63120100)
Ew Stunt	50	2000	2002		**163592230** (4UYF63110000)		**163597180** (4UYF63120000)
Yh Flipper	50	1998	1998	**163592210** (5EUF63110000)			**163597180** (4UYF63120000)
Yh Flipper	50	2001	2002	**163592210** (5EUF63110000)			**163597180** (4UYF63120000)
Yh Flipper Catali Ti Co	50	1999	2000	**163592210** (5EUF63110000)			**163597180** (4UYF63120000)
Yh Flipper Eu2	50	2003	2004	**163592210** (5EUF63110000)			**163597180** (4UYF63120000)
Yn R Ovetto (Che- Ita)	50	1997	2001		**163592100** (5ADF63110100)		**163597090** (5RNF63122000)
Yn R Ovetto Eu1	50	2002	2004		**163592100** (5ADF63110100)		**163597090** (5RNF63122000)
Yn R Ovetto Eu2	50	2002	2003		**163592100** (5ADF63110100)		**163597090** (5RNF63122000)
Yq L Nitro Jaguar	50	2004	2004	**163592110** (5BRF63110000)			**163597060** (3VFL63120100)
Yq Nitro	50	2001	2002	**163592110** (5BRF63110000)			**163597060** (3VFL63120100)
Yq Nitro	50	2004	2004	**163592110** (5BRF63110000)			**163597060** (3VFL63120100)
Yq Nitro (Ita)	50	1997	1998	**163592110** (5BRF63110000)			**163597060** (3VFL63120100)
Yq Nitro (Ita)	50	1999	2000	**163592110** (5BRF63110000)			**163597060** (3VFL63120100)
Yq Nitro Eu2	50	2003	2003				**163597060** (3VFL63120100)
Yp Skyliner	125	1998	2000	**163590190** (5DSF63110000)			
Yp Skyliner	125	2001	2002	**163590190** (5DSF63110000)			



Modello *Model*	**CC**	**Da** *From*	**A** *To*	**Cavo Gas** *Gas Cable*	**Comando sdoppiatore** *Command Splitter*	**Sdoppiatore miscelatore** *Mixer Splitter*	**Sdoppiatore carburatore** *Carburettor Splitter*
Yp Skyliner	150	2000	2000	**163590190** (5DSF63110000)			
Yp Skyliner	150	2001	2002	**163590190** (5DSF63110000)			
PIAGGIO							
Fly 2T	50	2005	2007		**163592240** (581539)	**163595030** (268403)	**163597300** (583334)
Fly 2T	50	2010	2011		**163592240** (581539)	**163595030** (268403)	
Fly 4T	50	2005	2007	**163592520** (601113)			
Fly 4T & 25-30 Km/H	50	2008	2011	**163592520** (601113)			
Fly 4T Motore Chn	50	2006	2007	**163592520** (601113)			
Free	50	1992	1994		**163592140** (581132)	**163595050** (268597)	**163597120** (269064)
Free Delivery	50	2000	2001		**163592140** (581132)	**163595050** (268597)	**163597120** (269064)
Free FL	50	1995	2002		**163592140** (581132)	**163595050** (268597)	**163597120** (269064)
Liberty	50	1997	2005		**163592150** (268435)	**163595080** (560448)	**163597030** (581173)
Liberty	50	2002	2002			**163595030** (268403)	
Liberty 2T	50	2006	2008			**163595030** (268403)	**163597300** (583334)
Liberty 2T Rst	50	2004	2004			**163595030** (268403)	**163597300** (583334)
Liberty 2T Sport	50	2006	2008			**163595030** (268403)	**163597300** (583334)
Liberty 4T	50	2000	2002	**163592390** (582426)			
Liberty 4T Rst	50	2004	2004	**163592390** (582426)			
Liberty Moc 2T & Elle	50	2009	2013			**163595030** (268403)	**163597300** (583334)
Liberty Ptt Eu2	50	2004	2005			**163595030** (268403)	**163597300** (583334)
Nrg	50	1994	1996		**163592010** (270995)	**163595010** (272290)	**163597010** (272289)
Nrg Extreme AC (Tamburo - *Brake drum*)	50	1999	2000		**163592240** (581539)	**163595080** (560448)	**163597020** (268402)
Nrg Extreme LC (Doppio Disco - *Double brake disc*)	50	1999	2000		**163592240** (581539)	**163595140** (583808)	**163597030** (581173)
Nrg Mc3 (Disco - *Brake disc*)	50	2001	2004		**163592240** (581539)	**163595140** (583808)	
Nrg Mc3 (Tamburo - *Brake drum*)	50	2001	2004		**163592240** (581539)	**163595080** (560448)	**163597030** (581173)
Nrg Power Dd	50	2005	2006		**163592240** (581539)		
Nrg Power Dd Serie Speciale	50	2007	2012		**163592240** (581539)		
Nrg Power Dt	50	2006	2011		**163592240** (581539)		
Nrg Power Dt Serie Speciale	50	2007	2008		**163592240** (581539)		
Nrg Power Purejet	50	2006	2009		**163592240** (581539)		
Nrg Purejet	50	2002	2004		**163592240** (581539)	**163595080** (560448)	
Nrg Rst Mc2	50	1996	1998		**163592280** (563902)	**163595140** (583808)	**163597030** (581173)
Ntt	50	1995	1996		**163592010** (270995)	**163595010** (272290)	**163597010** (272289)
Quartz	50	1992	1996		**163592150** (268435)	**163595030** (268403)	**163597020** (268402)



Modello *Model*	**CC**	**Da** *From*	**A** *To*	**Cavo Gas** *Gas Cable*	**Comando sdoppiatore** *Command Splitter*	**Sdoppiatore miscelatore** *Mixer Splitter*	**Sdoppiatore carburatore** *Carburettor Splitter*
Sfera	50	1991	1993		**163592160** (267981)	**163595060** (267018)	
Sfera Maquillage 2	50	1994	1994			**163595070** (268812)	**163597140** (268811)
Sfera Rst	50	1995	1997		**163592150** (268435)	**163595080** (560448)	**163597020** (268402)
Typhoon	50	2001	2004			**163595080** (560448)	**163597300** (583334)
Typhoon	50	2005	2011		**163592240** (581539)	**163595150** (563276)	**163597300** (583334)
Typhoon 2T Eu2	50	2010	2012			**163595030** (268403)	
Typhoon 2T Eu3 Ch	50	2011	2011			**163595030** (268403)	
Vespa Et2	50	1997	2005		**163592200** (581883)	**163595110** (562408)	**163597170** (582908)
Vespa Et2 Iniezione	50	1997	2000		**163592200** (581883)	**163595110** (562408)	
Vespa Et4	50	2000	2005	**163592390** (582426)			
Vespa LX 2T	50	2005	2013		**163597350** (583870)	**163597360** (601863)	**163597370** (1C001038)
Vespa LX 2T Touring & 30KM	50	2010	2013		**163597350** (583870)	**163597360** (601863)	**163597370** (1C001038)
Vespa LXV 2T	50	2006	2009			**163597360** (601863)	**163597370** (1C001038)
Vespa LXV 2T Navy	50	2008	2008			**163597360** (601863)	**163597370** (1C001038)
Vespa Primavera 2T	50	2013	2017				**163597370** (1C001038)
Vespa S 2T & College	50	2007	2012		**163597350** (583870)	**163597360** (601863)	**163597370** (1C001038)
Zip	50	1992	1993		**163592180** (269059)	**163595070** (268812)	**163597140** (268811)
Zip	50	2000	2004		**163592450** (561149)	**163595080** (560448)	**163597300** (583334)
Zip (Freno A Disco - *Brake Disc*)	50	1995	1996		**163592150** (268435)	**163595040** (271829)	**163597020** (268402)
Zip (Freno A Disco - *Brake Disc*)	50	1995	1996		**163592180** (269059)	**163595070** (268812)	**163597140** (268811)
Zip 2T	50	2008	2013		**163592450** (561149)	**163595080** (560448)	**163597300** (583334)
Zip 4T	50	2000	2005		**163592490** (582663)		
Zip 4T	50	2006	2013		**163592480** (646791)		
Zip Bimodale	50	1994	1997			**163595070** (268812)	**163597140** (268811)
Zip Fast Raider	50	1993	1994		**163592150** (268435)	**163595040** (271829)	**163597020** (268402)
Zip Fast Raider Rst	50	1996	1997		**163592150** (268435)	**163595080** (560448)	**163597020** (268402)
Zip Rst (Freno A Disco - *Brake Disc*)	50	1996	1999		**163592150** (268435)	**163595080** (560448)	**163597020** (268402)
Zip Rst (Freno A Tamburo - *Brake Drum*)	50	1996	1999		**163592180** (269059)	**163595070** (268812)	**163597140** (268811)
Zip Sp	50	1996	2000		**163592150** (268435)	**163595080** (560448)	**163597020** (268402)
Zip Sp	50	2001	2004		**163592450** (561149)	**163595080** (560448)	
Zip Sp Eu2	50	2006	2013		**163592450** (561149)	**163595080** (560448)	
Fly 4T	100	2006	2007	**163592520** (601113)			
Fly 4T	100	2008	2008	**163592520** (601113)			
Free	100	2002	2003		**163592140** (581132)		



CAVI TRASMISSIONE

TRANSMISSION CABLES

Modello *Model*	**CC**	**Da** *From*	**A** *To*	**Cavo Gas** *Gas Cable*	**Comando sdoppiatore** *Command Splitter*	**Sdoppiatore miscelatore** *Mixer Splitter*	**Sdoppiatore carburatore** *Carburettor Splitter*
Zip 4T	100	2006	2010		**163592480** (646791)		
Fly	125	2005	2007	**163592500** (CM073305)			
Fly Eu3	125	2007	2007	**163592520** (601113)			
Fly Eu3	125	2008	2011	**163592510** (649603) Chiude - *Close*			
Fly Eu3	125	2008	2011	**163592530** (649602) Apre - *Open*			
Liberty	125	1999	2000	**163592260** (CM065903)			
Liberty	125	2001	2002	**163592350** (CM065904)			
Liberty	125	2019	2019	**163590130** (561804)			
Sfera	125	1995	1997	**163590130** (561804)			
Skipper	125	1994	1997		**163592150** (268435)		
Skipper 4T	125	2000	2002	**163590390** (CM065912)			
Typhoon 4T 2V Eu3	125	2010	2011	**163592510** (649603) Chiude - *Close*			
Typhoon 4T 2V Eu3	125	2010	2011	**163592530** (649602) Apre - *Open*			
Vespa Et4	125	1996	1998	**163590130** (561804)			
Vespa Et4	125	1998	1999	**163592260** (CM065903)			
Vespa Et4	125	1999	2002	**163590360** (CM065907)			
X9	125	2001	2002		**163590690** (CM065911)		
X9 Evolution	125	2003	2003		**163590690** (CM065911)		
Fly	150	2005	2007	**163592500** (CM073305)			
Fly Eu3	150	2008	2011	**163592510** (649603) Chiude - *Close*			
Fly Eu3	150	2008	2011	**163592530** (649602) Apre - *Open*			
X9 Amalfi	180	2000	2003		**163590690** (CM065911)		
X9 Evolution	200	2003	2003		**163590690** (CM065911)		
X9 Evolution	250	2004	2004		**163590690** (CM065911)		
YAMAHA							
Bw's	50	2004	2012		**163592070** (3VLF63110100)		
Bw's Bump	50	1997	1998		**163592070** (3VLF63110100)		
Bw's Naked	50	2003	2003		**163592070** (3VLF63110100)		
Bw's Naked	50	2004	2004		**163592470** (2B7F6311000)		
Bw's Naked	50	2009	2012		**163592470** (2B7F6311000)		
Bw's Next Generation	50	1997	2006		**163592070** (3VLF63110100)		
Bw's Next Generation Cat.	50	1999	2000		**163592070** (3VLF63110100)		



Modello *Model*	**CC**	**Da** *From*	**A** *To*	**Cavo Gas** *Gas Cable*	**Comando sdoppiatore** *Command Splitter*	**Sdoppiatore miscelatore** *Mixer Splitter*	**Sdoppiatore carburatore** *Carburettor Splitter*
Bw's Original	50	1997	2002		**163592070** (3VLF63110100)		
Bw's Original Eu2	50	2003	2003		**163592070** (3VLF63110100)		
Bw's R	50	2001	2001		**163592070** (3VLF63110100)		
Ct S	50	1990	1995		**163592090** (1NTF63110000)		
Ct Ss	50	1992	1995		**163592090** (1NTF63110000)		
Cw Bw's Original Eu2	50	2002	2002		**163592070** (3VLF63110100)		
Cw L Bw's	50	2003	2004		**163592070** (3VLF63110100)		
Cw Rs Spy	50	1995	1998		**163592070** (3VLF63110100)		
Cw Sp Bw's Original Eu2	50	2002	2002		**163592070** (3VLF63110100)		
Ew Slider	50	2000	2002		**163592230** (4UYF63110000)		
Yh Why	50	1998	1998		**163592210** (5EUF63110000)		
Yh Why	50	2001	2002		**163592210** (5EUF63110000)		
Yh Why	50	2006	2006		**163592210** (5EUF63110000)		
Yh Why Eu1	50	1999	2000		**163592210** (5EUF63110000)		
Yh Why Eu2	50	2003	2005		**163592210** (5EUF63110000)		
Yn Neo's	50	2004	2006		**163592100** (5ADF63110100)		
Yn Neo's Eu2	50	2002	2003		**163592100** (5ADF63110100)		
Yn R Neo's	50	1997	2002		**163592100** (5ADF63110100)		
Yq Aerox	50	1997	1998		**163592110** (5BRF63110000)		
Yq Aerox	50	2001	2002		**163592110** (5BRF63110000)		
Yq Aerox	50	2004	2008		**163592110** (5BRF63110000)		
Yq Aerox	50	2009	2012		**163592070** (3VLF63110100)		
Yq Aerox R	50	1999	2000		**163592110** (5BRF63110000)		
Yq L Aerox Eu2	50	2003	2003		**163592110** (5BRF63110000)		
Yp125 Majesty	125	1998	2000	**163590190** (5DSF63110000)			
Yp150 Majesty	150	2000	2000	**163590190** (5DSF63110000)			



CAVI TRASMISSIONE STARTER - *STARTER TRANSMISSION CABLES*

Modello *Model*	CC	Da *From*	A *To*	Starter superiore *Upper starter*	Starter inferiore *Lower starter*
APRILIA					
Amico	50	1994	1994	**163610010** (AP8214108)	
Amico	50	1996	1998	**163610010** (AP8214108)	
Amico Gl-Gle	50	1993	1995	**163610010** (AP8214108)	
Amico Lx- Sport-Cat	50	1992	1993	**163610010** (AP8214108)	
Gulliver	50	1995	1998	**163610030** (AP8214159)	
Gulliver Lc	50	1996	1998	**163610030** (AP8214159)	
Rally	50	1995	2003	**163610030** (AP8214159)	
Rally Liquid Cooled	50	1996	1999	**163610100** (AP8214166)	
Scarabeo	50	1993	2005	**163610020** (AP8214124)	
Sonic	50	1998	2007	**163610090** (AP8214171)	
Sonic Gp	50	1998	2008	**163610090** (AP8214171)	
Sr	50	1993	1993	**163610010** (AP8214108)	
Sr Liquid Cooled	50	1994	1996	**163610010** (AP8214108)	
Sr Stealth, Racing	50	1997	2000	**163610030** (AP8214159)	
Sr Www	50	1997	2001	**163610030** (AP8214159)	
MBK					
Cw Booster	50	1990	1991	**163613010** (3VLF63310000)	**163616010** (3VLF63340200)
Cw Booster	50	2001	2002	**163613010** (3VLF63310000)	**163616010** (3VLF63340200)
Cw Booster (ITA)	50	1992	1994	**163613010** (3VLF63310000)	**163616010** (3VLF63340200)
Cw Booster Naked	50	2003	2003		**163616010** (3VLF63340200)
Cw Booster Spirit	50	1996	1998	**163613010** (3VLF63310000)	**163616010** (3VLF63340200)
Cw Booster Spirit (ITA)	50	1999	2000	**163613010** (3VLF63310000)	**163616010** (3VLF63340200)
Cw Booster Spirit Eu2	50	2002	2003	**163613010** (3VLF63310000)	**163616010** (3VLF63340200)
Cw L Booster	50	2001	2003	**163613010** (3VLF63310000)	**163616010** (3VLF63340200)
Cw L Booster Spirit	50	2003	2003	**163613010** (3VLF63310000)	**163616010** (3VLF63340200)
Cw R Booster Road (ITA)	50	1994	1995	**163613010** (3VLF63310000)	**163616010** (3VLF63340200)
Cw Rs Booster Ng	50	2001	2003		**163616010** (3VLF63340200)
Cw Rs Booster Ng (ITA)	50	1995	1999		**163616010** (3VLF63340200)
Cw Rs Booster Ng Eu1	50	1999	2000		**163616010** (3VLF63340200)
Cw Rsp Booster Rocket (ITA)	50	1997	1998		**163616010** (3VLF63340200)
Cw Rsx Booster Track (ITA)	50	1996	1998		**163616010** (3VLF63340200)
Cw Sp Booster Spirit Eu2	50	2002	2002	**163613010** (3VLF63310000)	**163616010** (3VLF63340200)
Ew Stunt	50	2000	2002		**163616010** (3VLF63340200)
Yq Nitro	50	2001	2002		**163616010** (3VLF63340200)
Yq Nitro	50	2004	2004		**163616010** (3VLF63340200)
Yq Nitro (ITA)	50	1997	1998		**163616010** (3VLF63340200)
Yq Nitro (ITA)	50	1999	2000		**163616010** (3VLF63340200)
PIAGGIO					
Vespa 50 L	50	1966	1970	**163610040** (0982212)	
Vespa 50 N	50	1963	1971	**163610040** (0982212)	
Vespa 50 R	50	1969	1984	**163610040** (0982212)	
Vespa 50 S	50	1963	1984	**163610040** (0982212)	
Vespa 50 Special	50	1969	1984	**163610040** (0982212)	
Vespa PK 50	50	1982	1988	**163610040** (0982212)	
Vespa PK 50 S	50	1982	1986	**163610040** (0982212)	
Vespa PK 50 S Elestart	50	1983	1986	**163610040** (0982212)	
Vespa PK 50 SS	50	1983	1987	**163610060** (1523912)	
Vespa PK 50 SS Elestart	50	1983	1986	**163610060** (1523912)	
Vespa PK 50 XL	50	1985	1990	**163610040** (0982212)	
Vespa PK 50 XL Elestart	50	1985	1990	**163610040** (0982212)	
Vespa PK 50 XL Rush	50	1988	1990	**163610040** (0982212)	
Vespa PK 50 XL Rush Elestart	50	1986	1990	**163610040** (0982212)	
Vespa SS uper Sprint	50	1965	1971	**163610040** (0982212)	
Vespa P80	80	1980	1983	**163610060** (1523912)	
Vespa P80 E	80	1980	1983	**163610060** (1523912)	
Vespa P80 X	80	1981	1983	**163610120** (092370)	
Vespa PK 80 S	80	1982	1986	**163610060** (1523912)	
Vespa PK 80 S Elestart	80	1983	1984	**163610060** (1523912)	
Vespa PX80 E	80	1981	1983	**163610120** (092370)	
Vespa 90	90	1963	1984	**163610040** (0982212)	
Vespa 90 SS Super Sprint	90	1965	1971	**163610040** (0982212)	
Vespa 100	100	1978	1990	**163610060** (1523912)	
Vespa PK 100 S	100	1982	1990	**163610060** (1523912)	
Vespa PK 100 S Elestart	100	1983	1986	**163610060** (1523912)	
Vespa PX100 E	100	1983	1985	**163610120** (092370)	



Modello *Model*	**CC**	**Da** *From*	**A** *To*	**Starter superiore** *Upper starter*	**Starter inferiore** *Lower starter*
Vespa 125	125	1959	1966	**163610120** (092370)	
Vespa 125 GT	125	1966	1973	**163610120** (092370)	
Vespa 125 GTR	125	1968	1978	**163610120** (092370)	
Vespa 125 Primavera	125	1965	1983	**163610060** (1523912)	
Vespa 125 Primavera Et3	125	1976	1990	**163610060** (1523912)	
Vespa 125 Super	125	1965	1969	**163610120** (092370)	
Vespa 125 TS	125	1975	1978	**163610120** (092370)	
Vespa P125 X	125	1977	1982	**163610120** (092370)	
Vespa PK 125	125	1982	1985	**163610060** (1523912)	
Vespa PK 125 ETS	125	1984	19845	**163610060** (1523912)	
Vespa PK 125 S	125	1983	1986	**163610060** (1523912)	
Vespa PK 125 S Elestart	125	1983	1984	**163610060** (1523912)	
Vespa PK 125 XL	125	1986	1990	**163610040** (0982212)	
Vespa PK 125XL Elestart	125	1986	1990	**163610040** (0982212)	
Vespa PX	125	1998	2001	**163610130** (104292)	
Vespa PX	125	2011	2017	**163610130** (104292)	
Vespa PX 125 T5	125	1985	1990	**163610120** (092370)	
Vespa PX 125 T5 Elestart	125	1986	1990	**163610120** (092370)	
Vespa PX 30 Anni	125	2007	2008	**163610130** (104292)	
Vespa PX Arcobaleno	125	1981	1997	**163610130** (104292)	
Vespa PX Euro 2	125	2001	2007	**163610130** (104292)	
Vespa PX125 E	125	1981	1983	**163610120** (092370)	
Vespa 150	150	1960	1967	**163610120** (092370)	
Vespa 150 GL	150	1957	1965	**163610120** (092370)	
Vespa 150 Sprint	150	1965	1974	**163610120** (092370)	
Vespa 150 Sprint Veloce	150	1969	1979	**163610120** (092370)	
Vespa 150 Super	150	1965	1979	**163610120** (092370)	
Vespa P150 S	150	1978	1990	**163610120** (092370)	
Vespa P150 X	150	1978	1981	**163610120** (092370)	
Vespa PX	150	2011	2017	**163610130** (104292)	
Vespa PX150 E	150	1981	1985	**163610120** (092370)	
Vespa 180 Rally	180	1968	1973	**163610120** (092370)	
Vespa 200 Rally	200	1972	1979	**163610120** (092370)	
Vespa P200 E	200	1977	1982	**163610120** (092370)	
Vespa P200 X	200	1977	1977	**163610120** (092370)	
Vespa PX200 E	200	1982	1986	**163610120** (092370)	
YAMAHA					
Bw's Bump	50	1997	1998		**163616010** (3VLF63340200)
Bw's Naked	50	2003	2003		**163616010** (3VLF63340200)
Bw's Next Generation	50	1997	2006		**163616010** (3VLF63340200)
Bw's Next Generation Cat.	50	1999	2000		**163616010** (3VLF63340200)
Bw's Original	50	1997	2002	**163613010** (3VLF63310000)	**163616010** (3VLF63340200)
Bw's Original Eu2	50	2003	2003	**163613010** (3VLF63310000)	**163616010** (3VLF63340200)
Bw's R	50	2001	2001	**163613010** (3VLF63310000)	**163616010** (3VLF63340200)
Cw Bw's Original Eu2	50	2002	2002	**163613010** (3VLF63310000)	**163616010** (3VLF63340200)
Cw L Bw's	50	2003	2003	**163613010** (3VLF63310000)	**163616010** (3VLF63340200)
Cw Rs Spy	50	1995	1998		**163616010** (3VLF63340200)
Cw Sp Bw's Original Eu2	50	2002	2002	**163613010** (3VLF63310000)	**163616010** (3VLF63340200)
Ew Slider	50	2000	2002		**163616010** (3VLF63340200)
Yq Aerox	50	1997	1998		**163616010** (3VLF63340200)
Yq Aerox	50	2001	2002		**163616010** (3VLF63340200)
Yq Aerox	50	2004	2008		**163616010** (3VLF63340200)
Yq Aerox R	50	1999	2000		**163616010** (3VLF63340200)



CAVI TRASMISSIONE FRENO - *BRAKE TRANSMISSION CABLES*

Modello *Model*	CC	Da *From*	A *To*	OEM	Codice RMS *RMS Code*	Freno *Brake*
APRILIA						
Amico	50	1994	1994	AP8214104	**163555020**	Posteriore | *Rear*
Amico	50	1996	1998	AP8214104	**163555020**	Posteriore | *Rear*
Amico Gl-Gle	50	1993	1995	AP8214104	**163555020**	Posteriore | *Rear*
Amico Lx- Sport-Cat	50	1992	1993	AP8214104	**163555020**	Posteriore | *Rear*
Gulliver	50	1995	1998	AP8214131	**163555030**	Posteriore | *Rear*
Gulliver Lc	50	1996	1998	AP8214131	**163555030**	Posteriore | *Rear*
Rally	50	1995	2003	AP8214131	**163555030**	Posteriore | *Rear*
Scarabeo	50	1993	2005	AP8214123	**163555040**	Posteriore | *Rear*
Sonic	50	1998	2007	AP8214174	**163555680**	Posteriore | *Rear*
Sonic Gp	50	1998	2008	AP8214174	**163555680**	Posteriore | *Rear*
Sr	50	1993	1993	AP8214104	**163555020**	Posteriore | *Rear*
Sr	50	1994	1996	AP8214131	**163555030**	Posteriore | *Rear*
Sr Liquid Cooled	50	1994	1996	AP8214131	**163555030**	Posteriore | *Rear*
Sr Stealth, Racing	50	1997	2000	AP8214131	**163555030**	Posteriore | *Rear*
Sr Www	50	1997	2001	AP8214131	**163555030**	Posteriore | *Rear*
Scarabeo Mot. Minarelli	100	2000	2000	AP8114395	**163555770**	Posteriore | *Rear*
Scarabeo Mot. Yamaha	100	2000	2000	AP8114395	**163555770**	Posteriore | *Rear*
DERBI						
Sonar 2T	50	2009	2009	600561	**163555370**	Posteriore | *Rear*
Sonar 4T	125	2009	2011	600561	**163555370**	Posteriore | *Rear*
Sonar 4T	150	2009	2009	600561	**163555370**	Posteriore | *Rear*
GILERA						
Easy Moving	50	1995	1996	271853	**163555100**	Posteriore | *Rear*
Runner	50	1997	2000	562424	**163555090**	Posteriore | *Rear*
Stalker	50	1997	2011	561151	**163555080**	Posteriore | *Rear*
Stalker Special Edition	50	2007	2008	561151	**163555080**	Posteriore | *Rear*
Storm	50	1994	1995	270993	**163555070**	Posteriore | *Rear*
Storm Eu2	50	2007	2007	270993	**163555070**	Posteriore | *Rear*
Typhoon	50	1994	1997	270993	**163555070**	Posteriore | *Rear*
Typhoon X	50	1998	1999	270993	**163555070**	Posteriore | *Rear*
Runner Fx-Fxr 125-180	125	1997	2002	563753	**163555710**	Posteriore | *Rear*
Typhoon	125	1995	1998	560711	**163555690**	Posteriore | *Rear*
Typhoon X-Xr	125	1999	2000	560711	**163555690**	Posteriore | *Rear*
HONDA						
Sh	125	-	-	43450KPR900	**163555910**	Posteriore | *Rear*
Sh	150	-	-	43450KPR900	**163555910**	Posteriore | *Rear*
MALAGUTI						
F12 Aria Restyling Eu2	50	2006	2006	4802903	**163555140**	Posteriore | *Rear*
F12 Phantom	50	1994	1998	4802903	**163555140**	Posteriore | *Rear*
F12 Phantom Eu1	50	1999	2000	4802903	**163555140**	Posteriore | *Rear*
F12 Phantom Lc	50	1994	1998	4802903	**163555140**	Posteriore | *Rear*
F12 Phantom R. Eu2-2.3	50	2003	2004	4802903	**163555140**	Posteriore | *Rear*
F12 Phantom Restyl. Eu1	50	2001	2002	4802903	**163555140**	Posteriore | *Rear*
F12 Phantom Restyl. Eu2	50	2002	2002	4802903	**163555140**	Posteriore | *Rear*
F15 Fire Fox	50	1996	1998	4803103	**163555170**	Posteriore | *Rear*
F15 Fire Fox Air Cooled	50	2005	2006	4803103	**163555170**	Posteriore | *Rear*
MBK						
Cw Booster	50	1990	1991	3VLF63510000	**163555180**	Posteriore | *Rear*
Cw Booster	50	2001	2002	5JHF63510100	**163555670**	Posteriore | *Rear*
Cw Booster	50	2004	2004	5WWF63510000	**163555250**	Posteriore | *Rear*
Cw Booster (ITA)	50	1992	1994	3VLF63510000	**163555180**	Posteriore | *Rear*
Cw Booster Spirit	50	1996	1998	3VLF63510000	**163555180**	Posteriore | *Rear*
Cw Booster Spirit (ITA)	50	1999	2000	3VLF63510000	**163555180**	Posteriore | *Rear*
Cw Booster Spirit Eu2	50	2002	2003	5JHF63510100	**163555670**	Posteriore | *Rear*
Cw L Booster	50	2001	2003	5JHF63510100	**163555670**	Posteriore | *Rear*



Modello *Model*	CC	Da *From*	A *To*	OEM	Codice RMS *RMS Code*	Freno *Brake*
Cw L Booster Spirit	50	2003	2003	5JHF63510100	**163555670**	Posteriore | *Rear*
Cw R Booster Road (ITA)	50	1994	1995	3VLF63510000	**163555180**	Posteriore | *Rear*
Cw Rs Booster Ng (ITA)	50	1995	1999	4SBF63510000	**163555190**	Posteriore | *Rear*
Cw Rs Booster Ng Eu1	50	1999	2000	4SBF63510000	**163555190**	Posteriore | *Rear*
Cw Rsp Booster Rocket (Ita)	50	1997	1998	4SBF63510000	**163555190**	Posteriore | *Rear*
Cw Rsx Booster Track (Ita)	50	1996	1998	4SBF63510000	**163555190**	Posteriore | *Rear*
Cw Sp Booster Spirit Eu2	50	2002	2002	5JHF63510100	**163555670**	Posteriore | *Rear*
Ew Stunt	50	2000	2002	5JHF63510100	**163555670**	Posteriore | *Rear*
Yn R Ovetto (Che- ITa)	50	1997	2001	5ADF63510000	**163555220**	Posteriore | *Rear*
Yn R Ovetto Eu1	50	2002	2004	5ADF63510000	**163555220**	Posteriore | *Rear*
Yn R Ovetto Eu2	50	2002	2003	5ADF63510000	**163555220**	Posteriore | *Rear*
Yn Ovetto	100	2000	2002	5ADF63510000	**163555220**	Posteriore | *Rear*
PEUGEOT						
Metal-X	50	2002	2002	736927	**163555880**	Posteriore | *Rear*
Speedfight 2 Aria	50	2005	2006	736927	**163555880**	Posteriore | *Rear*
Speedfight 2 Lc-Silversport	50	2005	2006	736927	**163555880**	Posteriore | *Rear*
Speedfight Acqua	50	1997	1998	736927	**163555880**	Posteriore | *Rear*
Speedfight Aria	50	1997	1998	736927	**163555880**	Posteriore | *Rear*
Speedfight Aria Catalitico	50	1999	1999	736927	**163555880**	Posteriore | *Rear*
Trekker	50	1998	2000	736927	**163555880**	Posteriore | *Rear*
Trk2 Wrc	50	2004	2006	736927	**163555880**	Posteriore | *Rear*
Vivacity	50	1999	1999	736927	**163555880**	Posteriore | *Rear*
Vivacity Catalitico	50	1999	2002	736927	**163555880**	Posteriore | *Rear*
Vivacity Vsx-Xr	50	2002	2004	736927	**163555880**	Posteriore | *Rear*
X-Fight	50	2000	2000	736927	**163555880**	Posteriore | *Rear*
Trekker	100	1998	1998	736927	**163555880**	Posteriore | *Rear*
Vivacity	100	1999	2001	736927	**163555880**	Posteriore | *Rear*
PIAGGIO						
Fly 2T	50	2005	2007	648078	**163555930**	Posteriore | *Rear*
Fly 2T	50	2010	2011	648078	**163555930**	Posteriore | *Rear*
Fly 4T	50	2005	2007	648078	**163555930**	Posteriore | *Rear*
Fly 4T & 25-30 Km/h	50	2008	2011	648078	**163555930**	Posteriore | *Rear*
Fly 4T Motore Chn	50	2006	2007	648078	**163555930**	Posteriore | *Rear*
Free Delivery	50	2000	2001	597383	**163555300**	Posteriore | *Rear*
Free FI	50	1995	2002	597383	**163555300**	Posteriore | *Rear*
Liberty	50	1997	2005	597383	**163555300**	Posteriore | *Rear*
Liberty 2T	50	2006	2008	600561	**163555370**	Posteriore | *Rear*
Liberty 2T Rst	50	2004	2004	597383	**163555300**	Posteriore | *Rear*
Liberty 2T Sport	50	2006	2008	600561	**163555370**	Posteriore | *Rear*
Liberty 4T	50	2000	2002	597383	**163555300**	Posteriore | *Rear*
Liberty 4T	50	2005	2008	600561	**163555370**	Posteriore | *Rear*
Liberty 4T Delivery- Single	50	2010	2014	600561	**163555370**	Posteriore | *Rear*
Liberty 4T Delivery Tnt	50	2009	2009	600561	**163555370**	Posteriore | *Rear*
Liberty 4T Ptt - Double	50	2009	2012	600561	**163555370**	Posteriore | *Rear*
Liberty 4T Ptt (Deu)	50	2007	2012	600561	**163555370**	Posteriore | *Rear*
Liberty 4T Rst	50	2004	2004	564217	**163555730**	Posteriore | *Rear*
Liberty 4T Sport	50	2006	2008	600561	**163555370**	Posteriore | *Rear*
Liberty Moc 2T & Elle	50	2009	2013	600561	**163555370**	Posteriore | *Rear*
Liberty Moc 4T & Elle	50	2009	2013	600561	**163555370**	Posteriore | *Rear*
Liberty Ptt Eu2	50	2004	2005	597383	**163555300**	Posteriore | *Rear*
Nrg	50	1994	1996	270993	**163555070**	Posteriore | *Rear*
Nrg Extreme	50	1999	2000	560711	**163555690**	Posteriore | *Rear*
Nrg Mc3	50	2001	2004	560711	**163555690**	Posteriore | *Rear*
Nrg Power Dt	50	2006	2011	564217	**163555730**	Posteriore | *Rear*
Nrg Power Dt Serie Speciale	50	2007	2008	564217	**163555730**	Posteriore | *Rear*
Nrg Rst Mc2	50	1996	1998	270993	**163555070**	Posteriore | *Rear*
Ntt	50	1995	1996	270993	**163555070**	Posteriore | *Rear*
Quartz	50	1992	1996	266213	**163555310**	Posteriore | *Rear*



CAVI TRASMISSIONE

TRANSMISSION CABLES

Modello *Model*	**CC**	**Da** *From*	**A** *To*	**OEM**	**Codice RMS** *RMS Code*	**Freno** *Brake*
Sfera	50	1991	1993	266213	**163555310**	Posteriore | *Rear*
Sfera	50	1991	1993	268195	**163550100**	Anteriore | *Front*
Sfera Maquillage 2	50	1994	1994	266213	**163555310**	Posteriore | *Rear*
Sfera Maquillage 2	50	1994	1994	268195	**163550100**	Anteriore | *Front*
Sfera Rst	50	1995	1997	562424	**163555090**	Posteriore | *Rear*
Sfera Rst	50	1995	1997	665912	**163555950**	Posteriore | *Rear*
Typhoon	50	2001	2011	270993	**163555070**	Posteriore | *Rear*
Typhoon 2T Eu2	50	2010	2012	666930	**163555940**	Posteriore | *Rear*
Typhoon 2T Eu3 Ch	50	2011	2011	666930	**163555940**	Posteriore | *Rear*
Vespa 50 FL	50	1990	1990	191803	**163518021 (10pz) 163518029 (50 pz)**	Posteriore | *Rear*
Vespa 50 HP	50	1990	1990	191803	**163518021 (10pz) 163518029 (50 pz)**	Posteriore | *Rear*
Vespa 50 R	50	1969	1984	191803	**163518021**	Posteriore | *Rear*
Vespa 50 S	50	1963	1984	191803	**163518021 (10pz) 163518029 (50 pz)**	Posteriore | *Rear*
Vespa 50 Special	50	1977	1984	191803	**163518021 (10pz) 163518029 (50 pz)**	Posteriore | *Rear*
Vespa 50 Special Revival	50	1990	1991	191803	**163518021 (10pz) 163518029 (50 pz)**	Posteriore | *Rear*
Vespa Et2	50	1997	2005	562424	**163555090**	Posteriore | *Rear*
Vespa ET2	50	1997	2005	562424	**163555950**	Posteriore | *Rear*
Vespa Et2 Iniezione	50	1997	2000	562424	**163555090**	Posteriore | *Rear*
Vespa ET2 Iniezione	50	1997	2000	562424	**163555950**	Posteriore | *Rear*
Vespa Et4	50	2000	2005	564217	**163555730**	Posteriore | *Rear*
Vespa Lx 2T	50	2005	2008	665912	**163555090**	Posteriore | *Rear*
Vespa LX 2T	50	2005	2008	665912	**163555950**	Posteriore | *Rear*
Vespa Lx 2T	50	2009	2013	665912	**163555090**	Posteriore | *Rear*
Vespa LX 2T	50	2009	2013	665912	**163555950**	Posteriore | *Rear*
Vespa Lx 2T Touring & 30Km/h	50	2010	2013	665912	**163555090**	Posteriore | *Rear*
Vespa Lx 2T Touring & 30Km/h	50	2010	2013	665912	**163555950**	Posteriore | *Rear*
Vespa Lx 4T	50	2005	2008	564217	**163555730**	Posteriore | *Rear*
Vespa Lx 4T-4V	50	2009	2013	564217	**163555730**	Posteriore | *Rear*
Vespa Lx 4T-4V Touring	50	2010	2013	564217	**163555730**	Posteriore | *Rear*
Vespa PK 50	50	1982	1988	191803	**163518021 (10pz) 163518029 (50 pz)**	Posteriore | *Rear*
Vespa PK 50	50	1982	1988	179642	**163550090**	Anteriore | *Front*
Vespa PK 50 S	50	1982	1986	191803	**163518021 (10pz) 163518029 (50 pz)**	Posteriore | *Rear*
Vespa PK 50 S	50	1982	1986	179642	**163550090**	Anteriore | *Front*
Vespa PK 50 S Elestart	50	1983	1986	191803	**163518021 (10pz) 163518029 (50 pz)**	Posteriore | *Rear*
Vespa PK 50 S Elestart	50	1983	1986	179642	**163550090**	Anteriore | *Front*
Vespa PK 50 SS	50	1983	1987	191803	**163518021 (10pz) 163518029 (50 pz)**	Posteriore | *Rear*
Vespa PK 50 SS	50	1983	1987	179642	**163550090**	Anteriore | *Front*
Vespa PK 50 SS Elestart	50	1983	1986	191803	**163518021 (10pz) 163518029 (50 pz)**	Posteriore | *Rear*
Vespa PK 50 SS Elestart	50	1983	1986	179642	**163550090**	Anteriore | *Front*
Vespa PK 50 XL	50	1985	1990	191803	**163518021 (10pz) 163518029 (50 pz)**	Posteriore | *Rear*
Vespa PK 50 XL	50	1985	1990	179642	**163550090**	Anteriore | *Front*
Vespa PK 50 XL Elestart	50	1985	1990	191803	**163518021 (10pz) 163518029 (50 pz)**	Posteriore | *Rear*
Vespa PK 50 XL Elestart	50	1985	1990	179642	**163550090**	Anteriore | *Front*
Vespa PK 50 XL Nuova	50	1989	1990	191803	**163518021 (10pz) 163518029 (50 pz)**	Posteriore | *Rear*
Vespa PK 50 XL Nuova	50	1989	1990	179642	**163550090**	Anteriore | *Front*
Vespa PK 50 XL Rush	50	1988	1990	191803	**163518021 (10pz) 163518029 (50 pz)**	Posteriore | *Rear*
Vespa PK 50 XL Rush	50	1988	1990	179642	**163550090**	Anteriore | *Front*
Vespa PK 50 XL Rush Elestart	50	1988	1988	191803	**163518021 (10pz) 163518029 (50 pz)**	Posteriore | *Rear*



Modello *Model*	**CC**	**Da** *From*	**A** *To*	**OEM**	**Codice RMS** *RMS Code*	**Freno** *Brake*
Vespa PK 50 XL Rush Elestart	50	1988	1988	179642	**163550090**	Anteriore | *Front*
Vespa PK 50 XLS	50	1986	1990	191803	**163518021 (10pz) 163518029 (50 pz)**	Posteriore | *Rear*
Vespa PK 50 XLS	50	1986	1990	179642	**163550090**	Anteriore | *Front*
Vespa S 2T & College	50	2007	2012	665912	**163555090**	Posteriore | *Rear*
Vespa S 2T & College	50	2007	2012	665912	**163555950**	Posteriore | *Rear*
Vespa S 4T-4V & College	50	2008	2010	564217	**163555730**	Posteriore | *Rear*
Vespa S 4T-4V & College	50	2008	2012	665912	**163555950**	Posteriore | *Rear*
Vespa S 4T-4V & College	50	2011	2012	665912	**163555090**	Posteriore | *Rear*
Zip	50	1992	1993	269656	**163555330**	Posteriore | *Rear*
Zip	50	1992	1993	269657	**163550110**	Anteriore | *Front*
Zip	50	1995	1996	269656	**163555330**	Posteriore | *Rear*
Zip	50	1995	1996	269657	**163550110**	Anteriore | *Front*
Zip	50	2000	2004	560781	**163555360**	Posteriore | *Rear*
Zip 4T	50	2000	2013	597141	**163555840**	Posteriore | *Rear*
Zip Bimodale	50	1994	1997	269656	**163555330**	Posteriore | *Rear*
Zip Bimodale	50	1994	1997	269657	**163550110**	Anteriore | *Front*
Zip Fast Raider	50	1993	1994	271853	**163555100**	Posteriore | *Rear*
Zip Fast Raider Rst	50	1996	1997	560781	**163555360**	Posteriore | *Rear*
Zip Rst	50	1996	1999	560781	**163555360**	Posteriore | *Rear*
Zip Rst	50	1996	1999	560752	**163550130**	Anteriore | *Front*
Zip Sp	50	1996	2000	560781	**163555360**	Posteriore | *Rear*
Skr City	80	1999	1999	268195	**163550100**	Anteriore | *Front*
Vespa P80	80	1980	1983	191803	**163518021 (10pz) 163518029 (50 pz)**	Posteriore | *Rear*
Vespa P80	80	1980	1983	179642	**163550090**	Anteriore | *Front*
Vespa P80 E	80	1980	1983	191803	**163518021 (10pz) 163518029 (50 pz)**	Posteriore | *Rear*
Vespa P80 E	80	1980	1983	179642	**163550090**	Anteriore | *Front*
Vespa P80 X	80	1981	1983	191803	**163518021 (10pz) 163518029 (50 pz)**	Posteriore | *Rear*
Vespa P80 X	80	1981	1983	179642	**163550090**	Anteriore | *Front*
Vespa PK80 S	80	1982	1986	191803	**163518021 (10pz) 163518029 (50 pz)**	Posteriore | *Rear*
Vespa PK80 S	80	1982	1986	179642	**163550090**	Anteriore | *Front*
Vespa PK80 S Elestart	80	1983	1984	191803	**163518021 (10pz) 163518029 (50 pz)**	Posteriore | *Rear*
Vespa PK80 S Elestart	80	1983	1984	179642	**163550090**	Anteriore | *Front*
Vespa PX80 E	80	1981	1983	191803	**163518021 (10pz) 163518029 (50 pz)**	Posteriore | *Rear*
Vespa PX80 E	80	1981	1983	179642	**163550090**	Anteriore | *Front*
Vespa PX80 E Arcobaleno	80	1983	1984	191803	**163518021 (10pz) 163518029 (50 pz)**	Posteriore | *Rear*
Vespa PX80 E Arcobaleno	80	1983	1984	179642	**163550090**	Anteriore | *Front*
Fly 4T	100	2006	2014	601736	**163555930**	Posteriore | *Rear*
Free	100	2002	2003	597383	**163555300**	Posteriore | *Rear*
Vespa 100 / Sport	100	1978	1990	191803	**163518021 (10pz) 163518029 (50 pz)**	Posteriore | *Rear*
Vespa PK100 S	100	1982	1990	191803	**163518021 (10pz) 163518029 (50 pz)**	Posteriore | *Rear*
Vespa PK100 S	100	1982	1990	179642	**163550090**	Anteriore | *Front*
Vespa PK100 S Elestart	100	1983	1986	191803	**163518021 (10pz) 163518029 (50 pz)**	Posteriore | *Rear*
Vespa PK100 S Elestart	100	1983	1986	179642	**163550090**	Anteriore | *Front*
Vespa PX100 E	100	1983	1985	191803	**163518021 (10pz) 163518029 (50 pz)**	Posteriore | *Rear*
Vespa PX100 E	100	1983	1985	179642	**163550090**	Anteriore | *Front*
Zip 4T	100	2006	2010	597141	**163555840**	Posteriore | *Rear*
Fly	125	2005	2007	648078	**163555930**	Posteriore | *Rear*
Fly Eu3	125	2007	2011	648078	**163555930**	Posteriore | *Rear*
Hexagon	125	1994	1997	564107	**163555700**	Posteriore | *Rear*
Hexagon Lx4	125	1998	1999	564107	**163555700**	Posteriore | *Rear*



CAVI TRASMISSIONE

TRANSMISSION CABLES

Modello *Model*	**CC**	**Da** *From*	**A** *To*	**OEM**	**Codice RMS** *RMS Code*	**Freno** *Brake*
Hexagon Lx-Lxt	125	1998	1999	564107	**163555700**	Posteriore | *Rear*
Liberty	125	1998	2000	597320	**163555740**	Posteriore | *Rear*
Liberty	125	2001	2001	564847	**163555850**	Posteriore | *Rear*
Liberty	125	2002	2002	564217	**163555730**	Posteriore | *Rear*
Liberty 4T	125	2006	2007	600561	**163555370**	Posteriore | *Rear*
Liberty 4T 2V Eu3	125	2009	2012	600561	**163555370**	Posteriore | *Rear*
Liberty 4T 2V Ie	125	2012	2012	600561	**163555370**	Posteriore | *Rear*
Liberty 4T Eu3	125	2006	2015	600561	**163555370**	Posteriore | *Rear*
Liberty 4T Sport Eu3	125	2006	2008	600561	**163555370**	Posteriore | *Rear*
Liberty Rst	125	2004	2005	564217	**163555730**	Posteriore | *Rear*
Liberty Rst Ptt	125	2005	2011	600561	**163555370**	Posteriore | *Rear*
Liberty Sport	125	2006	2006	600561	**163555370**	Posteriore | *Rear*
Skipper	125	1994	1997	266213	**163555310**	Posteriore | *Rear*
Skipper 4T	125	2000	2002	564474	**163555750**	Posteriore | *Rear*
Typhoon 4T 2V Eu3	125	2010	2011	666930	**163555940**	Posteriore | *Rear*
Vespa 125 Primavera ET3	125	1976	1990	191803	**163518021 (10pz)** **163518029 (50 pz)**	Posteriore | *Rear*
Vespa 125 Primavera VMA2T	125	1967	1983	191803	**163518021 (10pz)** **163518029 (50 pz)**	Posteriore | *Rear*
Vespa Et4	125	1996	1998	562424	**163555090**	Posteriore | *Rear*
Vespa ET4	125	1996	1998	562424	**163555950**	Posteriore | *Rear*
Vespa Et4	125	1999	2002	564217	**163555730**	Posteriore | *Rear*
Vespa Lx	125	2005	2006	564217	**163555730**	Posteriore | *Rear*
Vespa Lx 4T Eu3 Touring	125	2010	2011	564217	**163555730**	Posteriore | *Rear*
Vespa Lx 4T FI	125	2009	2009	564217	**163555730**	Posteriore | *Rear*
Vespa Lx Eu3	125	2006	2008	564217	**163555730**	Posteriore | *Rear*
Vespa Lx Eu3 ie	125	2009	2011	564217	**163555730**	Posteriore | *Rear*
Vespa P125 X	125	1977	1982	191803	**163518021 (10pz)** **163518029 (50 pz)**	Posteriore | *Rear*
Vespa P125 X	125	1977	1982	179642	**163550090**	Anteriore | *Front*
Vespa PK125	125	1982	1985	191803	**163518021 (10pz)** **163518029 (50 pz)**	Posteriore | *Rear*
Vespa PK125	125	1982	1985	179642	**163550090**	Anteriore | *Front*
Vespa PK125 ETS	125	1984	1985	191803	**163518021 (10pz)** **163518029 (50 pz)**	Posteriore | *Rear*
Vespa PK125 ETS	125	1984	1985	179642	**163550090**	Anteriore | *Front*
Vespa PK125 S	125	1982	1986	191803	**163518021 (10pz)** **163518029 (50 pz)**	Posteriore | *Rear*
Vespa PK125 S	125	1982	1986	179642	**163550090**	Anteriore | *Front*
Vespa PK125 S Elestart	125	1983	1986	191803	**163518021 (10pz)** **163518029 (50 pz)**	Posteriore | *Rear*
Vespa PK125 S Elestart	125	1983	1986	179642	**163550090**	Anteriore | *Front*
Vespa PK125 XL	125	1986	1990	191803	**163518021 (10pz)** **163518029 (50 pz)**	Posteriore | *Rear*
Vespa PK125 XL	125	1986	1990	179642	**163550090**	Anteriore | *Front*
Vespa PK125 XL Elestart	125	1986	1990	191803	**163518021 (10pz)** **163518029 (50 pz)**	Posteriore | *Rear*
Vespa PK125 XL Elestart	125	1986	1990	179642	**163550090**	Anteriore | *Front*
Vespa PX	125	1998	2017	191803	**163518021 (10pz)** **163518029 (50 pz)**	Posteriore | *Rear*
Vespa PX 125 T5	125	1985	1990	191803	**163518021 (10pz)** **163518029 (50 pz)**	Posteriore | *Rear*
Vespa PX 125 T5	125	1985	1990	179642	**163550090**	Anteriore | *Front*
Vespa PX 125 T5 Elestart	125	1986	1990	191803	**163518021 (10pz)** **163518029 (50 pz)**	Posteriore | *Rear*
Vespa PX 125 T5 Elestart	125	1986	1990	179642	**163550090**	Anteriore | *Front*
Vespa PX125 E	125	1981	1983	191803	**163518021 (10pz)** **163518029 (50 pz)**	Posteriore | *Rear*
Vespa PX125 E	125	1981	1983	179642	**163550090**	Anteriore | *Front*
Vespa PX125 Euro 2	125	2001	2007	191803	**163518021 (10pz)** **163518029 (50 pz)**	Posteriore | *Rear*
Vespa S 4T Euro 3	125	2007	2008	564217	**163555730**	Posteriore | *Rear*
Vespa S 4T Ie & College	125	2009	2011	564217	**163555730**	Posteriore | *Rear*



Modello *Model*	**CC**	**Da** *From*	**A** *To*	**OEM**	**Codice RMS** *RMS Code*	**Freno** *Brake*
Zip	125	2000	2002	597141	**163555840**	Posteriore | *Rear*
Fly	150	2005	2007	648078	**163555930**	Posteriore | *Rear*
Fly Eu3	150	2008	2011	648078	**163555930**	Posteriore | *Rear*
Liberty 4T Eu3	150	2008	2008	600561	**163555370**	Posteriore | *Rear*
Liberty 4T Sport Eu3	150	2008	2008	600561	**163555370**	Posteriore | *Rear*
Liberty Moc 4T Eu3	150	2009	2013	600561	**163555370**	Posteriore | *Rear*
Vespa Lx	150	2005	2006	564217	**163555730**	Posteriore | *Rear*
Vespa Lx 4T Fl	150	2009	2009	564217	**163555730**	Posteriore | *Rear*
Vespa Lx Eu3	150	2006	2008	564217	**163555730**	Posteriore | *Rear*
Vespa Lx Euro 3 ie	150	2009	2011	564217	**163555730**	Posteriore | *Rear*
Vespa Lx Touring	150	2010	2012	564217	**163555730**	Posteriore | *Rear*
Vespa P150 S	150	1978	1990	191803	**163518021 (10pz) 163518029 (50 pz)**	Posteriore | *Rear*
Vespa P150 S	150	1978	1990	179642	**163550090**	Anteriore | *Front*
Vespa P150 X	150	1978	1981	191803	**163518021 (10pz) 163518029 (50 pz)**	Posteriore | *Rear*
Vespa P150 X	150	1978	1981	179642	**163550090**	Anteriore | *Front*
Vespa PX	150	2011	2017	191803	**163518021 (10pz) 163518029 (50 pz)**	Posteriore | *Rear*
Vespa PX150 E	150	1981	1985	191803	**163518021 (10pz) 163518029 (50 pz)**	Posteriore | *Rear*
Vespa PX150 E	150	1981	1985	179642	**163550090**	Anteriore | *Front*
Vespa PX150 E Arcobaleno	150	1983	1997	191803	**163518021 (10pz) 163518029 (50 pz)**	Posteriore | *Rear*
Vespa PX150 E Arcobaleno	150	1983	1997	179642	**163550090**	Anteriore | *Front*
Vespa PX150 E Millenium	150	1998	2005	191803	**163518021 (10pz) 163518029 (50 pz)**	Posteriore | *Rear*
Vespa S 4T	150	2008	2009	564217	**163555730**	Posteriore | *Rear*
Vespa S 4T Ie & College	150	2009	2012	564217	**163555730**	Posteriore | *Rear*
Liberty	200	2006	2006	600561	**163555370**	Posteriore | *Rear*
Liberty 4T Eu3	200	2006	2008	600561	**163555370**	Posteriore | *Rear*
Liberty 4T Sport Eu3	200	2006	2007	600561	**163555370**	Posteriore | *Rear*
Liberty Rst	200	2004	2004	564217	**163555730**	Posteriore | *Rear*
Liberty Sport	200	2006	2006	600561	**163555370**	Posteriore | *Rear*
Vespa P200 E	200	1977	1982	191803	**163518021 (10pz) 163518029 (50 pz)**	Posteriore | *Rear*
Vespa P200 E	200	1977	1982	179642	**163550090**	Anteriore | *Front*
Vespa P200 X	200	1977	1977	191803	**163518021 (10pz) 163518029 (50 pz)**	Posteriore | *Rear*
Vespa P200 X	200	1977	1977	179642	**163550090**	Anteriore | *Front*
Vespa PX200 E	200	1982	1986	191803	**163518021 (10pz) 163518029 (50 pz)**	Posteriore | *Rear*
Vespa PX200 E	200	1982	1986	179642	**163550090**	Anteriore | *Front*
Vespa PX200 E Arcobaleno	200	1983	1990	191803	**163518021 (10pz) 163518029 (50 pz)**	Posteriore | *Rear*
Vespa PX200 E Arcobaleno	200	1983	1990	179642	**163550090**	Anteriore | *Front*
Vespa PX200 E Elestart	200	1981	2005	191803	**163518021 (10pz) 163518029 (50 pz)**	Posteriore | *Rear*
Hexagon Gt-Gtx	250	1998	2000	564107	**163555700**	Posteriore | *Rear*
YAMAHA						
Bw's	50	2004	2015	5WWF63510000	**163555250**	Posteriore | *Rear*
Bw's Bump	50	1997	1998	4SBF63510000	**163555190**	Posteriore | *Rear*
Bw's Easy	50	2013	2013	5WWF63510000	**163555250**	Posteriore | *Rear*
Bw's Naked	50	2004	2004	2B7F63510000	**163555240**	Posteriore | *Rear*
Bw's Naked	50	2009	2013	2B7F63510000	**163555240**	Posteriore | *Rear*
Bw's Next Generation	50	1997	1999	4SBF63510000	**163555190**	Posteriore | *Rear*
Bw's Next Generation Cat.	50	1999	2000	4SBF63510000	**163555190**	Posteriore | *Rear*
Bw's Original	50	1997	2000	3VLF63510000	**163555180**	Posteriore | *Rear*
Bw's Original	50	2001	2002	5JHF63510200	**163555670**	Posteriore | *Rear*
Bw's Original Eu2	50	2003	2003	5JHF63510100	**163555670**	Posteriore | *Rear*
Cw Bw's Original Eu2	50	2002	2002	5JHF63510100	**163555670**	Posteriore | *Rear*
Cw L Bw's	50	2003	2004	5JHF63510100	**163555670**	Posteriore | *Rear*



Modello *Model*	**CC**	**Da** *From*	**A** *To*	**OEM**	**Codice RMS** *RMS Code*	**Freno** *Brake*
Cw Rs Spy	50	1995	1998	4SBF63510000	**163555190**	Posteriore I *Rear*
Cw Sp Bw's Original Eu2	50	2002	2002	5JHF63510100	**163555670**	Posteriore I *Rear*
Ew Slider	50	2000	2002	5JHF63510200	**163555670**	Posteriore I *Rear*
Yn Neo's	50	2004	2006	5ADF63510000	**163555220**	Posteriore I *Rear*
Yn Neo's Eu2	50	2002	2003	5ADF63510000	**163555220**	Posteriore I *Rear*
Yn R Neo's	50	1997	2002	5ADF63510000	**163555220**	Posteriore I *Rear*
Yn Neo's	100	1999	2002	5ADF63510000	**163555220**	Posteriore I *Rear*

TRASMISSIONI PER KIT CONTACHILOMETRI VESPA -
VESPA TRANSMISSIONS FOR SPEEDOMETER KIT

Modello *Model*	**CC**	**Codice RMS** *RMS Code*
Vespa Primavera Modifica-*Modified* Per ContaKm-*For Speedometer:* 163680004 - 163680014 - 163680074 - 163680104	50-90-125	**163631011**
Vespa Primavera Modifica-*Modified* Per ContaKm-*For Speedometer:* 163680114 - 163680044	150	**163631901**
Vespa Primavera Modifica-*Modified* Per ContaKm-*For Speedometer:* 163680123	150	**163632131**
Vespa Px • Vespa Px 1° serie Modifica-*Modified* Per ContaKm-*For Speedometer:* 163680093 - 163680094	125-150-200	**163631051**
Vespa Gs	150-160	**163631941**



CAVI GAS - *THROTTLE CABLES*

		Tipologia cavo *Cable type*	Diametro *Cable diameter* [mm]	Lunghezza cavo *Cable lenght* [mm]	Terminale *Nipple type*	Confezione *Packaging*
163510011		Standard	1,2	2000	Nipplo 3x3mm *Nipple 3x3mm*	10pz *10pcs*
163510019		Standard	1,2	2000	Nipplo 3x3mm *Nipple 3x3mm*	50pz *50pcs*



		Tipologia cavo *Cable type*	Diametro *Cable diameter* [mm]	Lunghezza cavo *Cable lenght* [mm]	Terminale *Nipple type*	Confezione *Packaging*
163510021		Standard	1,2	2000	Barilotto 6,5x5mm *Big nipple 6,5x5mm*	10pz *10pcs*
163510029		Standard	1,2	2000	Barilotto 6,5x5mm *Big nipple 6,5x5mm*	50pz *50pcs*



		Tipologia cavo *Cable type*	Diametro *Cable diameter* [mm]	Lunghezza cavo *Cable lenght* [mm]	Terminale *Nipple type*	Confezione *Packaging*
163510031		Standard	1,2	1300	Nipplo 3x3mm *Nipple 3x3mm*	10pz *10pcs*
163510039		Standard	1,2	1300	Nipplo 3x3mm *Nipple 3x3mm*	50pz *50pcs*



		Tipologia cavo *Cable type*	Diametro *Cable diameter* [mm]	Lunghezza cavo *Cable lenght* [mm]	Terminale *Nipple type*	Confezione *Packaging*
163510041		Standard	1,2	3200	Nipplo 3x3mm *Nipple 3x3mm*	10pz *10pcs*
163510049		Standard	1,2	3200	Nipplo 3x3mm *Nipple 3x3mm*	50pz *50pcs*



		Tipologia cavo *Cable type*	Diametro *Cable diameter* [mm]	Lunghezza cavo *Cable lenght* [mm]	Terminale *Nipple type*	Confezione *Packaging*
163510051		Standard	1,2	3200	Barilotto mobile 8x5mm *Floating nipple 8x5mm*	10pz *10pcs*
163510059		Standard	1,2	3200	Barilotto mobile 8x5mm *Floating nipple 8x5mm*	50pz *50pcs*



		Tipologia cavo *Cable type*	Diametro *Cable diameter* [mm]	Lunghezza cavo *Cable lenght* [mm]	Terminale *Nipple type*	Confezione *Packaging*
163510081		Svedese *Braided*	1,2	2000	Nipplo 3x3mm *Nipple 3x3mm*	10pz *10pcs*
163510089		Svedese *Braided*	1,2	2000	Nipplo 3x3mm *Nipple 3x3mm*	25pz *25pcs*





CAVI TRASMISSIONE

TRANSMISSION CABLES

	Tipologia cavo *Cable type*	Diametro *Cable diameter* [mm]	Lunghezza cavo *Cable lenght* [mm]	Terminale *Nipple type*	Confezione *Packaging*
163510091	Standard	1,2	3200	Barilotto 6,5x5mm *Big nipple 6,5x5mm*	10pz *10pcs*
163510099	Standard	1,2	3200	Barilotto 6,5x5mm *Big nipple 6,5x5mm*	50pz *50pcs*



CAVI FRIZIONE - *CLUTCH CABLES*

	Tipologia cavo *Cable type*	Diametro *Cable diameter* [mm]	Lunghezza cavo *Cable lenght* [mm]	Terminale *Nipple type*	Confezione *Packaging*
163514011	Standard	1,8	2500	Barilotto 8x8mm *Big nipple 8x8mm*	10pz *10pcs*
163514019	Standard	1,8	2500	Barilotto 8x8mm *Big nipple 8x8mm*	50pz *50pcs*



	Tipologia cavo *Cable type*	Diametro *Cable diameter* [mm]	Lunghezza cavo *Cable lenght* [mm]	Terminale *Nipple type*	Confezione *Packaging*
163514021	Standard	1,8	2000	Nipplo tipo B *Type B nipple*	10pz *10pcs*
163514029	Standard	1,8	2000	Nipplo tipo B *Type B nipple*	50pz *50pcs*



	Tipologia cavo *Cable type*	Diametro *Cable diameter* [mm]	Lunghezza cavo *Cable lenght* [mm]	Terminale *Nipple type*	Confezione *Packaging*
163514041	Standard	2,5	2000	Sfera Ø7mm *Round nipple Ø7mm*	10pz *10pcs*
163514049	Standard	2,5	2000	Sfera Ø7mm *Round nipple Ø7mm*	50pz *50pcs*



	Tipologia cavo *Cable type*	Diametro *Cable diameter* [mm]	Lunghezza cavo *Cable lenght* [mm]	Terminale *Nipple type*	Confezione *Packaging*
163514050	Standard	2,5	2000	Barilotto 8x8mm *Big nipple 8x8mm*	10pz *10pcs*



	Tipologia cavo *Cable type*	Diametro *Cable diameter* [mm]	Lunghezza cavo *Cable lenght* [mm]	Terminale *Nipple type*	Confezione *Packaging*
163514111	Svedese *Braided*	1,8	2200	Barilotto 8x8mm *Big nipple 8x8mm*	10pz *10pcs*
163514119	Svedese *Braided*	1,8	2200	Barilotto 8x8mm *Big nipple 8x8mm*	25pz *25pcs*





		Tipologia cavo *Cable type*	Diametro *Cable diameter* [mm]	Lunghezza cavo *Cable lenght* [mm]	Terminale *Nipple type*	Confezione *Packaging*
163514121		Svedese *Braided*	1,8	2200	Barilotto mobile 8x8mm *Floating nipple 8x8mm*	10pz *10pcs*
163514129		Svedese *Braided*	1,8	2200	Barilotto mobile 8x8mm *Floating nipple 8x8mm*	25pz *25pcs*



CAVI CAMBIO - *SHIFT CABLES*

		Tipologia cavo *Cable type*	Diametro *Cable diameter* [mm]	Lunghezza cavo *Cable lenght* [mm]	Terminale *Nipple type*	Confezione *Packaging*
163516011		Standard	1,6	2000	Barilotto 8x6mm *Big nipple 8x6mm*	10pz *10pcs*
163516019		Standard	1,6	2000	Barilotto 8x6mm *Big nipple 8x6mm*	50pz *50pcs*





CAVI TRASMISSIONE GAS - *THROTTLE TRANSMISSION CABLES*

163510041

1,2x3200 mm
Confezione 10 Pz. | *10 Pcs Packing*

PIAGGIO 50: Ape FL/FL2 89-95 • Ape FL3/Europa 96-99 • Ape P 80-85 • Ape TM P 85-89
R.O. 118307



163510049

1,2x3200 mm
Confezione 50 Pz. | *50 Pcs Packing*

PIAGGIO 50: Ape FL/FL2 89-95 • Ape FL3/Europa 96-99 • Ape P 80-85 • Ape TM P 85-89
R.O. 118307



163510051

1,2x3200 mm
Confezione 10 Pz. | *10 Pcs Packing*

PIAGGIO 220: Ape MP 501-601



163510059

1,2x3200 mm
Confezione 50 Pz. | *50 Pcs Packing*

PIAGGIO 220: Ape MP 501-601



163510060

Confezione 10 Pz. | *10 Pcs Packing*

PIAGGIO 220: Ape MP P501-P601



163510070

Confezione 10 Pz. | *10 Pcs Packing*

PIAGGIO 220: Ape TM P602



163590630

PIAGGIO 220: Ape TM P602 Versione manubrio 82-83 • Ape P703 84-05 • Ape P703 V 84-05 • Ape P703 FL2 84-05
R.O. 177128





CAVI TRASMISSIONE FRIZIONE - *CLUTCH TRANSMISSION CABLES*

163514061

1,9x2800 mm
Confezione 10 Pz. | *10 Pcs Packing*

PIAGGIO 50: Ape TM P 85-89 • Ape RST Mix 99-03 • Ape P 80-85 • Ape Mix 98-08 • Ape FL3-Europa 96-99 • Ape FL- FL2 89-95
R.O. 118313



163514069

1,9x2800 mm
Confezione 50 Pz. | *50 Pcs Packing*

PIAGGIO 50: Ape TM P 85-89 • Ape RST Mix 99-03 • Ape P 80-85 • Ape Mix 98-08 • Ape FL3-Europa 96-99 • Ape FL- FL2 89-95
R.O. 118313



163514090

2,5x3000 mm
Confezione 10 Pz. | *10 Pcs Packing*

PIAGGIO 220: Ape Car 78-85
R.O. 136507



163514071

1,9x3000 mm
Confezione 10 Pz. | *10 Pcs Packing*

PIAGGIO 220: Ape P602 82-83



163514079

1,9x3000 mm
Confezione 50 Pz. | *50 Pcs Packing*

PIAGGIO 220: Ape P602 82-83



163514101

Confezione 10 Pz. | *10 Pcs Packing*

PIAGGIO 220: Ape TM P703 84-05 • Ape P703 V 84-05 • Ape FL2 84-05 • Ape TM P602 82-83



163514109

Confezione 50 Pz. | *50 Pcs Packing*

PIAGGIO 220: Ape TM P703 84-05 • Ape P703 V 84-05 • Ape FL2 84-05 • Ape TM P602 82-83



163570020

PIAGGIO 220: Ape P 602 82-83 • Ape P 703 84-05 • Ape P703 V 84-05 • Ape P703 FL2 84-05
R.O. 177150



163570040

PIAGGIO 420: Ape Poker Benzina 93-93 • Ape Poker Diesel 93-97
R.O. 266494





CAVI TRASMISSIONE APE

APE TRANSMISSION CABLES

163570060

PIAGGIO 420: Ape Tm P 703 87-04 • Ape P 703 V Diesel 87-04
R.O. 228715



CAVI TRASMISSIONE CAMBIO - *GEAR TRANSMISSION CABLES*

163516031

Confezione 10 Pz. | *10 Pcs Packing*

PIAGGIO 50: Ape FL-FL2 89-95 • Ape FL3-Europa 96-99 • Ape P 80-85 • Ape Tm P 85-89



163516039

Confezione 50 Pz. | *50 Pcs Packing*

PIAGGIO 50: Ape FL-FL2 89-95 • Ape FL3-Europa 96-99 • Ape P 80-85 • Ape Tm P 85-89



163516041

1,6x3000 mm
Confezione 10 Pz. | *10 Pcs Packing*

PIAGGIO 220: Ape Tm P 602 82-83



163516049

1,6x3000 mm
Confezione 50 Pz. | *50 Pcs Packing*

PIAGGIO 220: Ape Tm P 602 82-83



163516050

Confezione 10 Pz. | *10 Pcs Packing*

PIAGGIO 220: Ape Tm P 602 82-83
PIAGGIO 420: Ape P 703 87-04 • Ape P 703 V Diesel 87-04
R.O. 177920



163580020

PIAGGIO 220: Ape Tm 09-15 • Ape Tm P703 84-05 • Ape P703 V 84-05 • Ape P 703 FL2 84-05
R.O. 197097





163580040

PIAGGIO 420: Ape Tm Diesel LCS 05-12 • Ape Tm P703 87-04 • Ape P 703 V 87-04 • Ape P 703 Diesel 87-04
R.O. 228712



CAVI TRASMISSIONE STARTER - *STARTER TRANSMISSION CABLES*

163512010

Confezione 10 Pz. | *10 Pcs Packing*

PIAGGIO 220: Ape Tm P703 84-05 • Ape P 703 V 84-05 • Ape P 703 FL2 84-05 • Ape Tm P602 82-83 • Ape Tm 09-15 • Ape Mp P501 09-15 • Ape Mp P601 78-96
R.O. 214168



163610080

PIAGGIO 50: Ape P 80-85
R.O. 118456



163610110

PIAGGIO 50: Ape FL2 89-95 • Ape FL3 Europa 96-99 • Ape Rst Mix 99-03
R.O. 194821



TRASMISSIONI SDOPPIATORE MISCELATORE - *SPLITTER MIXER TRANSMISSIONS*

163595190

PIAGGIO 50: Ape 09-15 • Ape Mix 2 tempi 98-08 • Ape Rst Mix 99-03
R.O. 567104



163595120

PIAGGIO 220: Ape Mp 501 1 serie 78-96 • Ape P 601 78-96
R.O. 133441



163595130

PIAGGIO 220: Ape Car P2-P3 2 Serie 78-85 • Ape Mp 501 78-96 • Ape P 601 78-96 • Ape Tm 09-15 • Ape Tm P 602 82-83 • Ape P 703 84-05 • Ape P 703 V 84-05 • Ape P 703 FL2 84-05
R.O. 224979





TRASMISSIONI SDOPPIATORE CARBURATORE - *SPLITTER CARBURATOR TRANSMISSIONS*

163597290

PIAGGIO 50: Ape 09-15 • Ape Mix 2 tempi 98-08 • Ape Rst Mix 99-03
R.O. 567103



TRASMISSIONI RETROMARCIA - *REVERSE TRANSMISSIONS*

163585000

PIAGGIO 50: Ape Tm P 85-89 • Ape P 80-85
R.O. 117309



163585010

PIAGGIO 50: Ape Rst Mix 99-03 • Ape Mix 2 tempi 98-08 • Ape FL3-Europa 96-99 • Ape FL- FL2 89-95 • Ape 09-15
R.O. 258646



163585030

PIAGGIO 220: Ape Mp 501 78-96 • Ape P 601 78-96
R.O. 159693



163585040

PIAGGIO 220: Ape Tm P703 84-05 • Ape P 703 V 84-05 • Ape FL2 84-05 • Ape Tm 09-15
R.O. 266596



163585050

PIAGGIO 220: Ape Tm P602 82-83
R.O. 197069





TRASMISSIONI FRENO A MANO - *HANDBRAKE TRANSMISSIONS*

163555460

PIAGGIO 220: Ape Mp P 501 82-83 • Ape P 601 82-83
R.O. 140247



163555470

PIAGGIO 220: Ape Tm P703 84-05 • Ape Tm 602 82-83
PIAGGIO 420: Ape P 703 V Diesel 87-04
R.O. 189752



163555480

PIAGGIO 220: Ape Tm P 703 84-05 • Ape P 703 V 84-05 • Ape FL2 84-05 • Ape Tm P 602 82-83
PIAGGIO 420: Ape Tm P703 87-04 • Ape P 703 V Diesel 87-04
R.O. 214153



TRASMISSIONI CONTACHILOMETRI - *SPEEDOMETER TRANSMISSIONS*

163631080

PIAGGIO 50: Ape 09-15 • Ape FL-FL2 89-95 • Ape FL3-Europa 96-99 • Ape Mix 2T 98-08 • Ape P 80-85 • Ape Rst Mix 99-03 • Ape Tm P 85-89
R.O. 188636



163630850

PIAGGIO 220: Ape Tm P 602 82-83 • Ape Tm 84-05 • Ape P 703 V 84-05 • Ape P 703 FL2 84-05
R.O. 194371





KIT TRASMISSIONI GUAINE GRIGIE E CAVI COMPLETO VESPA - *VESPA TRANSMISSIONS KIT*

Modello *Model*	**CC**	**Codice RMS** *RMS Code*	**Codice a barre** *Barcode*	**OEM Gas** *Throttle*	**OEM Cambio** *Gear*	**OEM Frizione** *Clutch*	**OEM Freno Ant.** *Front Brake*	**OEM Freno Post.** *Rear Brake*	**OEM Starter** *Choke*	**OEM Contakm** *Speedometer*
Vespa	50-90	**163620010**		139403	139402	192681	174164	174701	098221	071059
Vespa Primavera Et3	125	**163620020**		139403	139402	192681	174164	174701	152391	071059
Vespa GL-Sprint	125-150	**163620030**		139403	139402	192681	174164	174701	092370	099011
Vespa Px 1 Serie Tamburo	125-150-200	**163620040**		139403	139402	192681	174164	174701	092370	174161
Vespa Px Arcobaleno	125-150-200	**163620050**		139403	139402	192681	179642	191804	104292	179271
Vespa Px Disco	125-150-200	**163620060**		139403	139402	192681	-	191804	104292	563796
Vespa	50-90	**163620190**		139403	139402	192681	174164	174701	098221	-
Vespa Special	50	**163620220**		139403	139402	192681	174164	191804	098221	071059
Vespa Px 2 Serie	125-150-200	**163620170**		139403	139402	192681	174164	191804	092370	174161

KIT TRASMISSIONI CICLOMOTORI PIAGGIO - *TRANSMISSION KIT PIAGGIO MOPED*

163620130

Colore grigio | *Grey color*
Trasmissione gas | *Throttle transmission*
Trasmissione freno anteriore | *Front brake transmission*
Trasmissione freno posteriore | *Rear brake transmission*
Trasmissione decompressore | *Decompressor transmission*
Ciao Sc



163620140

Colore grigio | *Grey color*
Trasmissione gas | *Throttle transmission*
Trasmissione freno anteriore | *Front brake transmission*
Trasmissione freno posteriore | *Rear brake transmission*
Trasmissione decompressore | *Decompressor transmission*
Ciao Px



163620150

Colore nero | *Black color*
Trasmissione gas | *Throttle transmission*
Trasmissione freno anteriore | *Front brake transmission*
Trasmissione freno posteriore | *Rear brake transmission*
Trasmissione decompressore | *Decompressor transmission*
Ciao Px



163620160

Colore nero | *Black color*
Trasmissione gas | *Throttle transmission*
Trasmissione freno anteriore | *Front brake transmission*
Trasmissione freno posteriore | *Rear brake transmission*
Trasmissione decompressore | *Decompressor transmission*
Si - Si FL2





KIT TRASMISSIONI COMPLETE LAMBRETTA - *LAMBRETTA COMPLETE TRANSMISSION KIT*

Modello *Model*	**CC**	**Kit Standard** *Standard Kit*	**Codice a barre** *Barcode*	**Tipo** *Type*	**Colore** *Colour*
Lambretta LI	125-150-200	163620240		Standard	Grigio | *Grey*
Lambretta DL	125-150-200	163620250		Standard	Nero | *Black*
Lambretta LI	125-150-200	163620260		Teflon	Grigio | *Grey*
Lambretta DL	125-150-200	163620270		Teflon	Nero | *Black*

Composto da: Cambio - Frizione - Freno anteriore - Freno posteriore - Starter - Contachilometri | *Composed by: Throttle - Shift - Clutch - Front Brake - Rear Brake - Choke - Speedometer*



121860310

SDOPPIATORE | *SPLITTER*

APRILIA 50: Sport City One 08-11 • SR Motard
DERBI 50: Boulevard 2T 09-14 • Sonar 2T 09 • Variant Sport 2T 12
GILERA 50: Runner • Runner SP • Runner Purejet • DNA • Stalker
GILERA 125-180: Runner FX-FXR 97-02
PIAGGIO 50: Ape Mix • Liberty 2T • NRG Power • NRG • Sfera RST • Typhoon • Vespa ET2 • Vespa LX • Vespa LXV • Vespa Primavera • Vespa S • Vespa Sprint • Zip • Zip SP
PIAGGIO 125: Hexagon LX-LXT • Skipper • Skipper LX
R.O. 269571



121860343

NIPPLO | *NIPPLE*
Confezione 10 pz. | *10 Pcs Packing*

PIAGGIO: Vari modelli Vespa - *Vespa various models*
R.O. 018699



121830470

SOFFIETTO PROTEZIONE CAVI | *RUBBER BELLOW CABLE*
Confezione 5 pz. | *5 Pcs Packing*

PIAGGIO: Vespa PX • PE • PXE Arcobaleno VNX-VLX-VSX-VNX2-VLX2-VSX2
R.O. 156425



121860323

KIT SERRAFILO FRENO ANTERIORE | *FRONT BRAKE CABLE NIPPLE*
Confezione 5 pz. | *5 Pcs Packing*

PIAGGIO: Vari modelli Vespa - *Vespa various models*
R.O. 177271



184040673

BUSSOLA CAVO | *BUSH*
Confezione 5 pz. | *5 Pcs Packing*

PIAGGIO 125-150-200: Vespa PX • Vespa PXE Arcobaleno VNX-VLX-VSX-VNX2-VLX2-VSX2
R.O. 133912



184040683

BUSSOLA CAVO | *BUSH*
Confezione 5 pz. | *5 Pcs Packing*

PIAGGIO 125-150-200: Vespa PX • Vespa PXE Arcobaleno VNX-VLX-VSX-VNX2-VLX2-VSX2
R.O. 133913





MORSETTI CAVI

CABLE CLAMPS

121858010

MORSETTO CON VITE LATERALE | *CLAMPS WITH SIDE SCREW*
Ø7x11 - M4
Per cavo frizione Ø1,9 mm | *For clutch cable Ø1,9 mm*
Confezione 10 pz. | *10 Pcs Packing*

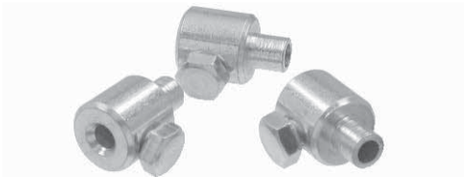

121858020

MORSETTO CON VITE LATERALE | *CLAMPS WITH SIDE SCREW*
Ø8x12 - M4
Per cavo frizione Ø2,5 mm | *For clutch cable Ø2,5 mm*
Confezione 10 pz. | *10 Pcs Packing*



121858030

MORSETTO CON VITE LATERALE | *CLAMPS WITH SIDE SCREW*
Ø12x18 - M5
Per cavo frizione Ø3 mm | *For clutch cable Ø3 mm*
Confezione 10 pz. | *10 Pcs Packing*



121858040

MORSETTO CAVO GAS | *THROTTLE CABLE CLAMPS*
Ø5,5x7,3 - M4
Tipo Magura | *Magura type*
Confezione 10 pz. | *10 Pcs Packing*



121858050

MORSETTO CAVO GAS | *THROTTLE CABLE CLAMPS*
Ø5,5x6 - Filetto 1/8
Super pratic
Confezione 10 pz. | *10 Pcs Packing*



121858060

MORSETTO CILINDRICO CAVO GAS | *THROTTLE CABLE CLAMPS*
Ø4x9
Per carburatore Vespa
Confezione 10 pz. | *10 Pcs Packing*



121858070

MORSETTO CAVO CAMBIO | *GEAR CABLE CLAMPS*
Lunghezza 11 mm | *Length 11 mm*
Esagono 8x11 mm | *Hexagon 8x11 mm*
Gambo Ø6,8 mm | *Stem Ø6,8 mm*
Confezione 10 pz. | *10 Pcs Packing*

PIAGGIO: Vespa (Vari modelli - *Various models*)
R.O. 153198



121858080

MORSETTO CAVO CAMBIO | *GEAR CABLE CLAMPS*
Lunghezza 16 mm | *Length 16 mm*
Esagono 8x16 mm | *Hexagon 8x16 mm*
Gambo Ø6,8 mm | *Stem Ø6,8 mm*
Confezione 10 pz. | *10 Pcs Packing*

PIAGGIO 220: Ape MP P501-P601 78-96
PIAGGIO 420: Ape Car-Max Diesel 86-96 • Ape Poker Diesel 93-97
R.O. 153513



121858120

MORSETTO REGOLATORE FILO FRENO FRIZIONE | *TERMINAL ADJUSTING SCREW*
Confezione 5 pz. | *5 Pcs Packing*

Applicazioni varie - *Various applications*





121830090

PASSACAVO TUBO BENZINA | *FUEL HOSE GROMMET*
Confezione 5 pz. | *5 Pcs Packing*

PIAGGIO 125: Vespa 125 • Vespa GT • Vespa GTR • Vespa TS • Vespa PXE Arcobaleno
PIAGGIO 150: Vespa 150 • Vespa Super • Vespa • Vespa PXE Arcobaleno • Vespa Sprint • Vespa Sprint Veloce
PIAGGIO 160: Vespa GS
PIAGGIO 180: Vespa SS • Vespa Rally
PIAGGIO 200: Vespa Rally • Vespa PXE Arcobaleno
R.O. 084262



121830110

PASSACAVO COFANO MOTORE | *COWL GROMMET*
Confezione 10 pz. | *10 Pcs Packing*

PIAGGIO 125-150: Vespa PX • Vespa PXE Arcobaleno
R.O. 156946



121830360

PASSACAVO TELAIO | *FRAME GROMMET*
Confezione 5 pz. | *5 Pcs Packing*

PIAGGIO 125-150-200: Vespa PX • Vespa PE VNX2-VLX2-VSX1
R.O. 048171



121830410

PASSACAVO TELAIO | *FRAME GROMMET*
Confezione 5 pz. | *5 Pcs Packing*

PIAGGIO 50-90: Vespa 50-90
PIAGGIO 125: Vespa Primavera ET3
R.O. 070219



121830830

PASSACAVO TELAIO | *FRAME GROMMET*

PIAGGIO 50: Vespa PK • Vespa PK XL • Vespa FL • Vespa FL2 • Vespa N • Vespa HP
PIAGGIO 125: Vespa PK XL • Vespa FL
R.O. 241071



121859070

PASSACAVO GOMMATO Ø8 MM | *GROMMET Ø8 MM*
Confezione 5 pz. | *5 Pcs Packing*



121859080

PASSACAVO GOMMATO Ø12 MM | *GROMMET Ø12 MM*
Confezione 5 pz. | *5 Pcs Packing*



121859090

PASSACAVO GOMMATO Ø16 MM | *GROMMET Ø16 MM*
Confezione 10 pz. | *10 Pcs Packing*



121860000

PASSACAVO GOMMATO Ø20 MM | *GROMMET Ø20 MM*
Confezione 10 pz. | *10 Pcs Packing*





REGISTRI CAVI

CABLE REGISTERS

121858130

REGISTRO CAVO Ø5 MM | *ADJUSTING SCREW Ø5 MM*
Esagono 8 mm | *Hexagon 8 mm*
M5x31 mm | *M5x31 mm*
Confezione 10 pz. | *10 Pcs Packing*
R.O. 090527 - 020105



121858150

REGISTRO CAVO Ø8 MM | *ADJUSTING SCREW Ø8 MM*
Esagono 12 mm | *Hexagon 12 mm*
M8x40 mm | *M8x40 mm*
Confezione 10 pz. | *10 Pcs Packing*



121858250

REGOLATORE M8 | *M8 ADJUSTING SCREW*
Confezione 5 pz. | *5 Pcs Packing*



121858260

REGOLATORE M5 | *M5 ADJUSTING SCREW*
Confezione 10 pz. | *10 Pcs Packing*



121858270

REGOLATORE M6 | *M6 ADJUSTING SCREW*
Confezione 5 pz. | *5 Pcs Packing*



GUAINA CON SPIRALE IN ACCIAIO TONDO (TIPO ITALIA) - *OUTER CABLE ROUND WIRE (ITALIAN TYPE)*

163530400

Colore Nero | *Colour Black*
Misura 50/mtrs roll | *Size 50/mtrs roll*
Foro interno 2,5 mm | *Inside hole 2,5 mm*
Diametro esterno 4,5 mm | *Outside diameter mm 4,5 mm*
Diametro esterno con rivestimento 5,2 mm | *Outside hole with rubber mm 5,2 mm*



163530401

Colore Grigio | *Colour Gray*
Misura 50/mtrs roll | *Size 50/mtrs roll*
Foro interno 2,5 mm | *Inside hole 2,5 mm*
Diametro esterno 4,5 mm | *Outside diameter mm 4,5 mm*
Diametro esterno con rivestimento 5,2 mm | *Outside hole with rubber mm 5,2 mm*



163530411

Colore Grigio millerighe | *Colour Gray grooved*
Misura 50/mtrs roll | *Size 50/mtrs roll*
Foro interno 2,5 mm | *Inside hole 2,5 mm*
Diametro esterno 4,5 mm | *Outside diameter mm 4,5 mm*
Diametro esterno con rivestimento 5,2 mm | *Outside hole with rubber mm 5,2 mm*



GUAINA A FILO PIATTO CON INSERTO IN PVC - *OUTER CABLE FLAT TYPE*

163530510

Colore Nero | *Colour Black*
Misura 50/mtrs roll | *Size 50/mtrs roll*
Foro interno 2,00/2,10 | *Inside hole 2,00/2,10*
Diametro esterno 3,95/4,00 | *Outside diameter mm 3,95/4,00*
Diametro esterno con rivestimento 4,91/5,00 | *Outside hole with rubber mm 4,91/5,00*





CAPIGUAINA

CABLE ENDS

421830201

CAPOGUAINA Ø5,5 x 9,5 MM | *CABLE ENDS Ø5,5 x 9,5 MM*
Confezione 10 pz. | *10 Pcs Packing*



121858190

CAPOGUAINA Ø6 x 10 MM | *CABLE ENDS Ø6 x 10 MM*
Confezione 50 pz. | *50 Pcs Packing*



121858200

CAPOGUAINA Ø7 x 11 MM | *CABLE ENDS Ø7 x 11 MM*
Confezione 50 pz. | *50 Pcs Packing*



421830211

CAPOGUAINA Ø5 x 9,5 MM NICHELATA | *NICHEL - PLATED CABLE ENDS Ø5 x 9,5 MM*
Confezione 10 pz. | *10 Pcs Packing*



121858210

BUSSOLA GUAINA Ø4,5 MM | *CABLE END Ø4,5 MM*
Dimensioni 7x9 mm | *Dimensions 7x9 mm*
Confezione 20 pz. | *20 Pcs Packing*





Modello *Model*	CC	Anno *Year*	OEM	Codice RMS *RMS Code*
APRILIA				
Sport City One 2T	50	08-11	860193	**121790280**
Sport City One 4T	50	08-10	860193	**121790280**
Sr Motard 2T	50	12-14	860193	**121790280**
Sr Motard 4T 4V	50	13-14	860193	**121790280**
Sport City One 4T Eu3	125	08-11	860193	**121790280**
Sr Motard	125	12-14	860193	**121790280**
GILERA				
Easy Moving	50	95-96	179292	**121790040**
Easy Moving	50	95-96	179292	**121790042**
Ice	50	01-05	576718	**121790160**
Runner	50	97-00	576718	**121790160**
Runner Poggiali	50	02	576718	**121790160**
Runner Purejet	50	02-04	576718	**121790160**
Runner Sp	50	02-04	576718	**121790160**
Storm	50	94-95	179292	**121790040**
Storm	50	94-95	179292	**121790042**
Typhoon	50	94-97	179292	**121790040**
Typhoon	50	94-97	179292	**121790042**
Typhoon X	50	98-99	179292	**121790040**
Typhoon X	50	98-99	179292	**121790042**
Typhoon Xr	50	00	179292	**121790040**
Typhoon Xr	50	00	179292	**121790042**
Runner Fx-Fxr 125-180	125	97-02	576718	**121790160**
Runner Vx-Vxr 125-200	125	02-04	576718	**121790160**
Typhoon	125	95-98	179292	**121790040**
Typhoon	125	95-98	179292	**121790042**
Typhoon X-Xr	125	99-00	179292	**121790040**
Typhoon X-Xr	125	99-00	179292	**121790042**
Runner Fx-Fxr 125-180	180	97-02	576718	**121790160**
Runner Vx-Vxr 125-200	200	02-04	576718	**121790160**
PIAGGIO				
Ape Fl- Fl2	50	89-95	258664	**121790212**
Ape Fl3 Europa	50	96-99	258664	**121790212**
Free	50	92-94	179292	**121790040**
Free	50	92-94	179292	**121790042**
Nrg	50	94-96	179292	**121790040**
Nrg	50	94-96	179292	**121790042**
Ntt	50	95-96	179292	**121790040**
Ntt	50	95-96	179292	**121790042**
Quartz	50	92-96	179292	**121790040**
Quartz	50	92-96	179292	**121790042**
Sfera	50	91-93	179292	**121790040**
Sfera	50	91-93	179292	**121790042**
Sfera Maquillage 2	50	94	179292	**121790040**
Sfera Maquillage 2	50	94	179292	**121790042**
Sfera Rst	50	95-97	179292	**121790040**
Sfera Rst	50	95-97	179292	**121790042**
Typhoon	50	01-04	179292	**121790040**
Typhoon	50	01-04	179292	**121790042**
Typhoon 2T Eu3 Ch	50	11	860193	**121790280**
Vespa Et2	50	97-05	573905	**121790010**
Vespa Et2	50	97-05	573905	**121790020**
Vespa Et4	50	00-05	573905	**121790010**
Vespa Et4	50	00-05	573905	**121790020**
Vespa Lx 2T	50	09-13	573905	**121790010**
Vespa Lx 2T	50	09-13	573905	**121790020**

Modello *Model*	CC	Anno *Year*	OEM	Codice RMS *RMS Code*
Vespa Lx 2T	50	05-08	573905	**121790010**
Vespa Lx 2T	50	05-08	573905	**121790020**
Vespa Lx 2T Touring & 30 Km	50	10-13	573905	**121790010**
Vespa Lx 2T Touring & 30 Km	50	10-13	573905	**121790020**
Vespa Lx 4T	50	05-09	573905	**121790010**
Vespa Lx 4T	50	05-09	573905	**121790020**
Vespa Lx 4T-4V	50	09-13	573905	**121790010**
Vespa Lx 4T-4V	50	09-13	573905	**121790020**
Vespa Lx 4T-4V Touring	50	10-13	573905	**121790010**
Vespa Lx 4T-4V Touring	50	10-13	573905	**121790020**
Vespa Lxv 2T	50	06-09	573905	**121790010**
Vespa Lxv 2T	50	06-09	573905	**121790020**
Vespa Lxv 2T Navy	50	08	573905	**121790010**
Vespa Lxv 2T Navy	50	08	573905	**121790020**
Vespa N	50	89-90	179292	**121790040**
Vespa N	50	89-90	179292	**121790042**
Vespa Pk	50	82-84	179292	**121790040**
Vespa Pk	50	82-84	179292	**121790042**
Vespa Pk Xl	50	85-88	179292	**121790040**
Vespa Pk Xl	50	85-88	179292	**121790042**
Vespa Pk XlPlurimatic	50	85-90	179292	**121790040**
Vespa Pk XlPlurimatic	50	85-90	179292	**121790042**
Vespa Pk XlRush	50	88-89	179292	**121790040**
Vespa Pk XlRush	50	88-89	179292	**121790042**
Vespa Primavera 4T-4V	50	13-17	573905	**121790010**
Vespa Primavera 4T-4V	50	13-17	573905	**121790020**
Vespa S 2T & College	50	07-12	573905	**121790010**
Vespa S 2T & College	50	07-12	573905	**121790020**
Vespa S 4T-4V & College	50	08-12	573905	**121790010**
Vespa S 4T-4V & College	50	08-12	573905	**121790020**
Zip	50	92-93	179292	**121790040**
Zip	50	92-93	179292	**121790042**
Zip	50	95-96	179292	**121790040**
Zip	50	95-96	179292	**121790042**
Zip Fast Raider	50	93-94	179292	**121790040**
Zip Fast Raider	50	93-94	179292	**121790042**
Skr City	80	99	179292	**121790040**
Skr City	80	99	179292	**121790042**
Cosa Cl-Clx	125	88-91	179292	**121790040**
Cosa Cl-Clx	125	88-91	179292	**121790042**
Sfera	125	95-97	179292	**121790040**
Sfera	125	95-97	179292	**121790042**
Skipper	125	94-97	179292	**121790040**
Skipper	125	94-97	179292	**121790042**
Typhoon 4T 2V Eu3	125	10-11	860193	**121790280**
Vespa Et4	125	96-98	573905	**121790010**
Vespa Et4	125	96-98	573905	**121790020**
Vespa PkXl	125	86-89	179292	**121790040**
Vespa PkXl	125	86-89	179292	**121790042**
Vespa Px	125	11-17	179292	**121790040**
Vespa Px	125	11-17	179292	**121790042**
Vespa Px	125	98-01	179292	**121790040**
Vespa Px	125	98-01	179292	**121790042**



Modello *Model*	**CC**	**Anno** *Year*	**OEM**	**Codice RMS** *RMS Code*
Vespa Px 30 Anni	125	07-08	179292	**121790040**
Vespa Px 30 Anni	125	07-08	179292	**121790042**
Vespa Px Eu2	125	01-07	179292	**121790040**
Vespa Px Eu2	125	01-07	179292	**121790042**
Vespa Px T5	125	85-89	179292	**121790040**
Vespa Px T5	125	85-89	179292	**121790042**
Vespa Pxe Arcobaleno	125	81-97	179292	**121790040**
Vespa Pxe Arcobaleno	125	81-97	179292	**121790042**
Vespa S 4T Eu3	125	07-08	573905	**121790010**
Vespa S 4T Eu3	125	07-08	573905	**121790020**
Vespa S 4T Ie & College	125	09-11	573905	**121790010**
Vespa S 4T Ie & College	125	09-11	573905	**121790020**
Vespa Lt 4T 3V Ie	150	14	573905	**121790010**
Vespa Lt 4T 3V Ie	150	14	573905	**121790020**
Vespa Px	150	11-17	179292	**121790040**
Vespa Px	150	11-17	179292	**121790042**
Vespa S 4T	150	08-09	573905	**121790010**
Vespa S 4T	150	08-09	573905	**121790020**
Vespa S 4T Ie & College	150	09-12	573905	**121790010**
Vespa S 4T Ie & College	150	09-12	573905	**121790020**



SERRATURE SCOOTER - APE - *SCOOTER - APE LOCKS*

121790010

1 Cilindretto | *Cylinder lock 1 pc*
PIAGGIO: R.O. 573905



121790020

2 Cilindretti | *Cylinders lock 2 pcs*
PIAGGIO: R.O. 573905



121790040

2 Cilindretti | *Cylinder lock 2 pcs*
GILERA - PIAGGIO: R.O. 179292



121790042

ZADI

2 Cilindretti | *Cylinder lock 2 pcs*
GILERA - PIAGGIO: R.O. 179292



121790160

2 Cilindretti | *Cylinder lock 2 pcs*
GILERA: R.O. 576718



121790212

ZADI

Kit serratura completa | *Complete lock*
PIAGGIO: R.O. 258664



121790280

2 cilindretti | *Cylinder lock 2 pcs*
APRILIA - PIAGGIO: R.O. 860193



SERRATURE VESPA - *VESPA LOCKS*

121790060

121790062

Kit 3 pezzi cilindretti | *Cylinder lock set 3 pcs*

PIAGGIO 50-125: Vespa PK • Vespa PK XL • Vespa PX
Arcobaleno
R.O. 179292



121790090

121790092

Cilindretto per serratura

PIAGGIO 50-125: Vespa PK • Vespa PK XL • Vespa PX
Arcobaleno
R.O. 196486



121790232

Kit 5 pezzi cilindretti | *Cylinder lock set 5 pcs*

PIAGGIO 50-125: Vespa PK • Vespa PK XL • Vespa PX
Arcobaleno
R.O. 196467



121790293

Serratura sterzo | *Steering lock*

PIAGGIO 125: Vespa 57-65 (VNA-VNB)
PIAGGIO 150: Vespa 59-65 (VBA-VBB)
R.O. 082416



121790303

Serratura sterzo | *Steering lock*
Piastrina corta | *Short plate*

PIAGGIO 125: Vespa 51-57
PIAGGIO 150: Vespa 54-56 • Vespa GS 55 (VS1)
R.O. 20456



121790713

Serratura sterzo | *Steering lock*
Piastrina lunga | *Long plate*

PIAGGIO 150: Vespa 57-58 (VB1) • Vespa GS 56-61
R.O. 060727





121790272

ZADI

Kit serratura 4 mm + Bauletto | *Kit cylinder 4 mm + Tool box*

PIAGGIO 50: Vespa
PIAGGIO 125: Vespa Primavera • Vespa P125X
PIAGGIO 150: Vespa P150S • Vespa Super
PIAGGIO 200: Rally
R.O. 139188



121790162

ZADI

Kit serratura 4 mm + Bauletto - Chiavi in plastica | *Kit cylinder 4 mm + Tool box - Plastic keys*

PIAGGIO 125-150-200: Vespa PX 1° Serie • Vespa GL • Vespa Sprint • Vespa Super
R.O. 139188



121790262

ZADI

Kit serratura 4 mm + Bauletto + Sella | *Kit cylinder 4 mm + Tool box + Seat*

PIAGGIO 125-150: Vespa PX
PIAGGIO 200: Vespa P200E 78-84
R.O. 184860



121790172

ZADI

Kit serratura 6 mm + Bauletto | *Kit cylinder 6 mm + Tool box*

PIAGGIO 50: Vespa S • Vespa Elestart
PIAGGIO 125: Vespa Primavera ET3 • Vespa PX • Vespa PE
R.O. 182178



121790122

ZADI

Serratura sterzo - Chiavi in plastica | *Steering lock - Plastic 2 keys*
Guida mm 4 | *Size mm 4*

PIAGGIO 50-125-150: Vespa Primavera • Vespa PX • Vespa Super • Vespa Sprint • Vespa Rally
R.O. 152096



121790192

ZADI

Serratura sterzo - Chiavi in metallo | *Steering lock - Metal 2 keys*
Guida mm 4 | *Size mm 4*

PIAGGIO 50-125-150: Vespa Primavera • Vespa PX • Vespa Super • Vespa Sprint • Vespa Rally
R.O. 152096





SERRATURE

LOCKS

121790132

ZADI

Serratura sterzo - Chiavi in plastica | *Steering lock - Plastic 2 keys*
Guida mm 6 | *Size mm 6*

PIAGGIO 50: Vespa S • Vespa Elestart • Vespa R
PIAGGIO 125: Vespa ET3 • Vespa PX • Vespa PE
R.O. 139371



121790202

ZADI

Serratura sterzo - Chiavi in metallo | *Steering lock - Metal 2 keys*
Guida mm 6 | *Size mm 6*

PIAGGIO 50: Vespa S • Vespa Elestart • Vespa R
PIAGGIO 125: Vespa ET3 • Vespa PX • Vespa PE
R.O. 139371



121790222

ZADI

Serratura sterzo - Chiavi in metallo | *Steering lock - Metal 2 keys*
Guida mm 4 | *Size mm 4*

PIAGGIO 50: Vespa R • Vespa SS • Vespa 50 Special
PIAGGIO 90: Vespa SS
PIAGGIO 125: Vespa Primavera • Vespa Super Sprint
R.O. 120328



121790141

121790142

Serratura bauletto | *Tool box lock*

PIAGGIO 125: Vespa ET3 Primavera • Vespa Super • Vespa PX
PIAGGIO 150: Vespa PX
PIAGGIO 200: Vespa PX • Vespa Rally
R.O. 139379



121790180

Serratura bauletto | *Tool box lock*

PIAGGIO 50: Vespa N 89-90 • Vespa PK XL Rush 88-90 • Vespa PK XL 85-88
PIAGGIO 125-150-200: Vespa PX T5 85-89 • Vespa PX 98-01 • Vespa PXE Arcobaleno 81-97
R.O. 198560



121790252

Serratura bauletto | *Tool box lock*

PIAGGIO 125-150: Vespa PX Millenium
R.O. 576998





121790513

Serratura bauletto laterale o posteriore | *Tool box rear or side lock*

PIAGGIO 150: Vespa Sprint 1° Serie • Vespa GS
VLB-VL3-VBA-VBB1-VBB2-VS2-VS5
R.O. 025911



121790613

Con Coperchio | *With Cover*

PIAGGIO: Vespa 150
VBA-VBB-VNA-VNB-VNC-VBC



121790152

ZADI

Serratura sportello laterale | *Side door lock*

PIAGGIO 50-90-125: Vespa Primavera



121790313

Serratura sella | *Seat lock*

PIAGGIO 125-150-200: Vespa PX 1° Serie
VNX-VLX-VSX
R.O. 190013 - 437959



121790170

Serratura sella | *Seat lock*

PIAGGIO 125-150-200: Vespa PX 30 Anni 07-08 • Vespa PX Eu2 01-07 • Vespa PX T5 85-89 • Vespa PXE Arcobaleno 81-97 • Vespa PK 98-01
R.O. 178887



121790413

Serratura sella | *Seat lock*

PIAGGIO: Vespa Millenium
R.O. 577267



121790182

ZADI

KIT COPERCHIETTO SERRATURA | *LOCK COVER*

PIAGGIO 180: Vespa Rally
R.O. 152097 - 152098 - 152099



121790190

COPERCHIETTO SERRATURA | *LOCK COVER*
Confezione 5 pz. | *5 Pcs Packing*

PIAGGIO50-125: Vespa (Vari modelli - *Various models*) • Ape 50 • Ape TM P
R.O. 174628



121790422 NEW

SBOZZATO CHIAVE 7x19x2mm | *KEY BLANK 7x19x2mm*
Confezione 1 pz. | *1 Pcs Packing*



121830460

FONDELLO BLOCCA STERZO | *GASKET FOR CYLINDER LOCK*
Confezione 5 pz. | *5 Pcs Packing*

PIAGGIO 125-150-200: Vespa PX
VNX-VLX-VSX
R.O. 174092



121870012

ZADI

CORPO CILINDRETTO SERRATURA | *CYLINDER LOCKBODY*

PIAGGIO - GILERA
R.O. 297777



121870022

ZADI

CORPO CILINDRETTO SERRATURA | *CYLINDER LOCKBODY*

PIAGGIO 50: Vespa FL 90 • Vespa FL2 Automatica 90-91 • Vespa FL2 HP 91-97 • Free 92-94 • Free Delivery 00-01 • Free FL 95-02 • Sfera 91-93
PIAGGIO 80: SKR City 99
PIAGGIO 125: Vespa FL • Cosa 2 91-97 • Skipper 94-97
PIAGGIO 150: Cosa 2 91-97 • Skipper
PIAGGIO 200: Cosa 2 91-97
R.O. 254536





121870080

CORPO CILINDRETTO SERRATURA | *CYLINDER LOCK BODY*

APRILIA 50-125: Sport City One • SR Motard
DERBI 50-125-150-200: Boulevard • Sonar • Variant Sport
GILERA 50: Ice • Runner Poggiali • Runner Purejet • Runner SP
GILERA 125-180-200: Runner FX-FXR • Runner VX-VXR
PIAGGIO 50: Fly • Liberty 2T • Liberty 4T • NRG Power • NRG Purejet • Typhoon • Vespa ET2 • Vespa LX • Vespa LXV • Vespa S • Zip
PIAGGIO 125-150-200: Liberty • Skipper • Vespa ET4 • Vespa Granturismo • Vespa GTS • Vespa GTV • Vespa LX • Vespa LXV • X7 • X8 • X9 • X10
PIAGGIO 250-300: Beverly • Hexagon GT-GTX • Vespa GTS • Vespa GTV • X7 • X8 • X9
PIAGGIO 400-500: Beverly • X8 • X9 • X10
R.O. 298581



121950090

PIASTRINA SERRATURA BAULETTO | *TOOLBOX LOCK PLATE*
Confezione 10 pz. | *10 Pcs Packing*

PIAGGIO 50: Vespa N • Vespa PK XL • Vespa PK XL Rush • Vespa PK XL Plurimatic
PIAGGIO 125: Vespa PX • Vespa PX T5 • Vespa PK XL
PIAGGIO 150: Vespa Sprint • Vespa GS • Vespa PX
PIAGGIO 200: Vespa PXE Arcobaleno • Vespa Rally
R.O. 073260





121530300

ASSE PEDALIERA | *CRANKLE SPINDLE*

PIAGGIO: Ciao
R.O. 188073



121830120

BUSSOLA PEDALIERA | *AXLE BUSH*
Confezione 10 pz. | *10 Pcs Packing*

PIAGGIO: SI
R.O. 141737



121830450

GOMMINO PEDALE FRENO | *BRAKE PEDAL RUBBER*
Confezione 10 pz. | *10 Pcs Packing*

PIAGGIO 125: Vespa 125 61-66 • Vespa Super 66-68 • Vespa GT 66-73
PIAGGIO 150: Vespa GS • Vespa GL • Vespa 150 61-66
PIAGGIO 160: Vespa GS
PIAGGIO 180-200: Vespa SS • Vespa Rally
VNB-VBB-VNL
R.O. 093100



121830480

GOMMINO PEDALE FRENO | *BRAKE PEDAL RUBBER*
Confezione 5 pz. | *5 Pcs Packing*

PIAGGIO 50: Vespa 50 • Vespa 50 Special • Vespa S
PIAGGIO 90: Vespa 90
PIAGGIO 125-150-200: Vespa Primavera • Vespa ET3 • Vespa PX
V5A-V5B-V5S-V9A-V9B-VMA
R.O. 182051



121830500

GOMMINO PEDALE FRENO | *BRAKE PEDAL RUBBER*
Confezione 5 pz. | *5 Pcs Packing*

PIAGGIO 50: Vespa 50 66-71
PIAGGIO 90: Vespa 90 65-71
PIAGGIO 125: Vespa 125 58-59 • Vespa ET3 76-83
V5SS-V5A1T-V9SS-VMB1
R.O. 100426

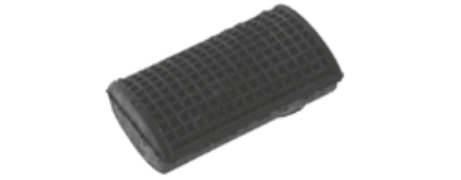

121950100

MOLLA PEDALE FRENO | *BRAKE PEDAL SPRING*
Confezione 5 pz. | *5 Pcs Packing*

PIAGGIO 50-90-125: Vespa Primavera • Vespa ET3
R.O. 070994





121510020

COPPIA PEDALI | *PEDALS PAIR*
Tipo originale | *Standard type*

PIAGGIO: Ciao • Si • Bravo • Grillo
R.O. 191643



121530190

PEDALE E PIASTRA FRENO COMPLETO | *BRAKE PEDAL ASSY*

PIAGGIO: Vespa PX • Vespa PE
VNX-VLX-VSX-VNX2-VLX2-VSX2
R.O. 182049-138474



121530313

PEDALE FRENO | *BRAKE PEDAL*

PIAGGIO 150: Vespa GL • Vespa Sprint • Vespa Super • Vespa Sprint veloce
VLB-VLA-VBC
R.O. 094451





PEDIVELLE MESSA IN MOTO

KICK STARTER LEVERS

121530010

Nero | *Black*

BENELLI 50: 491 GT 98-99 • Pepe 99-01 • K2 LC 98-01
R.O. R19140011A0
MALAGUTI 50: Centro Base 93-94 • Centro SL 94-98 • Ciak 99-00 • F10 Restyling 03-06 • F12 Phantom 99-10 • F15 Fire Fox 96-04 • Yesterday 97-00
R.O. 08100903
MBK 50: Booster Track 96-98 • Evolis 92-95 • Fizz 94-95 • Forte 94-96
R.O. 4CUE56200100
YAMAHA 50: BW'S Bump 97-98 • Axis 95-96 • Breeze 94-95
R.O. 4CUE56200100



121530011

Cromato | *Chrome plated*

BENELLI 50: 491 GT 98-99 • Pepe 99-01 • K2 LC 98-01
R.O. R19140011A0
MALAGUTI 50: Centro Base 93-94 • Centro SL 94-98 • Ciak 99-00 • F10 Restyling 03-06 • F12 Phantom 99-10 • F15 Fire Fox 96-04 • Yesterday 97-00
R.O. 08100903
MBK 50: Booster Track 96-98 • Evolis 92-95 • Fizz 94-95 • Forte 94-96
R.O. 4CUE56200100
YAMAHA 50: BW'S Bump 97-98 • Axis 95-96 • Breeze 94-95
R.O. 4CUE56200100



121530020

Nero | *Black*

MBK 50: Booster Rocket 97-98 • Booster Spirit 96-98 • Booster NG 95-98 • Nitro 97-98
R.O. 3VLE56200100
YAMAHA 50: BW'S Next Generation 97-98 • BW'S Original 97-98 • RS Spy 95-98 • Aerox 97-98
R.O. 3VLE56200100



121530021

Cromato | *Chrome plated*

MBK 50: Booster Rocket 97-98 • Booster Spirit 96-98 • Booster NG 95-98 • Nitro 97-98
R.O. 3VLE56200100
YAMAHA 50: BW'S Next Generation 97-98 • BW'S Original 97-98 • RS Spy 95-98 • Aerox 97-98
R.O. 3VLE56200100



121530030

Nero | *Black*

PEUGEOT 50: Buxy 94-97 • Speedake 95-97 • Speedfight AC-LC 97-98 • SV Geo 91-95 • Zenith L 94-96
PEUGEOT 100: Elyseo 99-01 • Speedfight 97-00 • SV L 98 • Vivacity 99-01 • X-Fight 00-01
R.O. 723494



121530040

Nero | *Black*

APRILIA 50-100: Scarabeo 4T • Sport City One • Mojito • SR Motard • SR R
DERBI 50: Atlantis O2 • Atlantis 2T • Atlantis 4T • Boulevard 2T-4T • GP1 • Sonar • Variant Sport
GILERA 50: DNA • Runner SP • Stalker • Storm • Typhoon X-XR
GILERA 125: Runner FX-FXR • Typhoon X-XR
PIAGGIO 50: Fly 2T • Fly 4T • Free • Liberty 2T • Liberty 4T • NRG Power DD • Sfera • Typhoon • Zip 4T • Zip RST
PIAGGIO 100: Fly • Free • Zip
PIAGGIO 125: Skipper • Skipper LX
R.O. 286214





121530041

Cromato | *Chrome plated*

APRILIA 50-100: Scarabeo 4T • Sport City One • Mojito • SR Motard • SR R
DERBI 50: Atlantis O2 • Atlantis 2T • Atlantis 4T • Boulevard 2T-4T • GP1 • Sonar • Variant Sport
GILERA 50: DNA • Runner SP • Stalker • Storm • Typhoon X-XR
GILERA 125: Runner FX-FXR • Typhoon X-XR
PIAGGIO 50: Fly 2T • Fly 4T • Free • Liberty 2T • Liberty 4T • NRG Power DD • Sfera • Typhoon • Zip 4T • Zip RST
PIAGGIO 100: Fly • Free • Zip
PIAGGIO 125: Skipper • Skipper LX
R.O. 286214



121530050

Alluminio | *Aluminium*

PIAGGIO 50-90-125: Vespa 50-90 • Vespa Primavera ET3 V5A1-V5B1-V5SA1-V9A1-VMA2
R.O. 079077



121530060

Alluminio | *Aluminium*

PIAGGIO 50: Vespa PK • Vespa PK XL • Vespa Rush • Vespa N
PIAGGIO 125: Vespa PK • Vespa PK XL
R.O. 2161415



121530080

Alluminio | *Aluminium*

PIAGGIO 50: Vespa ET2 97-05 • Vespa ET2 Iniezione 97-00 • Vespa ET4 00-05 • Vespa LX 2T 05-08 • Vespa S 4T-4V 08-09
R.O. 969421



121530090

Alluminio | *Aluminium*

PIAGGIO 125: Vespa ET4
R.O. 479133



121530100

Alluminio | *Aluminium*

APRILIA 50: Gulliver 95-98 • Rally 95-03 • Area 51 98-00 • Gulliver LC 96-98 • Rally LC 96-99 • Scarabeo 93-05 • Sonic 98-07 • SR 94-96• SR LC 94-96
R.O. AP8235073



121530170

Alluminio | *Aluminium*

PIAGGIO 125-150: Modelli Vespa fino al 1958 - *Vespa models till 1958*
R.O. 174310



121530180

Alluminio | *Aluminium*

PIAGGIO: Vespa 125-150 59 VNB1/2-VBB-VBA1T
R.O. 083986



121530200

Alluminio | *Aluminium*

PIAGGIO 125-150-200: Vespa PX • Vespa PE • Vespa PXE Arcobaleno
R.O. 1743125





PEDIVELLE MESSA IN MOTO

KICK STARTER LEVERS

121530223

Alluminio | *Aluminium*

INNOCENTI: Lambretta Li 3° Serie



121530210

Coppia pedivelle Sx - Dx | *Lh - Rh crank levers*

PIAGGIO: Ciao
R.O. 180888 - 180889



225000010

COLORE GRIGIO ORIGINALE | *ORIGINAL GREY COLOR*
3.50 x 10”
Ø Esterno 278 mm | *External Ø 278 mm*

PIAGGIO 50: Vespa 50 (Vari modelli - *Various model*)
PIAGGIO 125: Vespa Primavera • Vespa Primavera ET3 • Vespa PK • Vespa PX
PIAGGIO 180-200: Vespa Rally
R.O. 084631



225000011

COLORE NERO | *BLACK COLOR*
3.50 x 10”
Ø Esterno 278 mm | *External Ø 278 mm*

PIAGGIO 50: Vespa 50 (Vari modelli - *Various model*)
PIAGGIO 125: Vespa Primavera • Vespa Primavera ET3 • Vespa PK • Vespa PX
PIAGGIO 180-200: Vespa Rally



225000012

COLORE GRIGIO ORIGINALE | *ORIGINAL GREY COLOR*
3.50 x 10”
Ø Esterno 278 mm | *External Ø 278 mm*
Prodotto in India | *Made in India*

PIAGGIO 50: Vespa 50 (Vari modelli - *Various model*)
PIAGGIO 125: Vespa Primavera • Vespa Primavera ET3 • Vespa PK • Vespa PX
PIAGGIO 180-200: Vespa Rally



225000013

COLORE ROSSO | *RED COLOR*
3.50 x 10”
Ø Esterno 278 mm | *External Ø 278 mm*

PIAGGIO 50: Vespa 50 (Vari modelli - *Various model*)
PIAGGIO 125: Vespa Primavera • Vespa Primavera ET3 • Vespa PK • Vespa PX
PIAGGIO 180-200: Vespa Rally



225000014

COLORE GRIGIO | *GREY COLOR*
3.50 x 8”
Ø Esterno 235 mm | *External Ø 235 mm*

PIAGGIO 125-150: Vespa Super
R.O. 1103765



225000015

COLORE BIANCO | *WHITE COLOR*
3.50 x 10”
Ø Esterno 278 mm | *External Ø 278 mm*

PIAGGIO 50: Vespa 50 (Vari modelli - *Various model*)
PIAGGIO 125: Vespa Primavera • Vespa Primavera ET3 • Vespa PK • Vespa PX
PIAGGIO 180-200: Vespa Rally



225000016

CROMATO | *CHROMED*
3.50 x 10”
Ø Esterno 278 mm | *External Ø 278 mm*

PIAGGIO 50: Vespa 50 (Vari modelli - *Various model*)
PIAGGIO 125: Vespa Primavera • Vespa Primavera ET3 • Vespa PK • Vespa PX
PIAGGIO 180-200: Vespa Rally



225000017

CROMATO LUSSO | *TOP QUALITY CHROMED*
3.50 x 10”
Ø Esterno 278 mm | *External Ø 278 mm*

PIAGGIO 50: Vespa 50 (Vari modelli - *Various model*)
PIAGGIO 125: Vespa Primavera • Vespa Primavera ET3 • Vespa PK • Vespa PX
PIAGGIO 180-200: Vespa Rally



225000018

COLORE GRIGIO | *GREY COLOR*
3.50 x 8"
Ø Esterno 235 mm | *External Ø 235 mm*

PIAGGIO 125: Vespa 125 51-65
PIAGGIO 150: Vespa 150 55-66
R.O. 014984



225000019

COLORE GRIGIO | *GREY COLOR*

INNOCENTI: Lambretta Li 3°SERIE





Modello *Model*	CC	Da *From*	A *To*	OEM	Codice RMS *RMS Code*
BMW					
C 600 Sport Abs	600	2012	2015	52537725097	**121870440**
C 600 Sport Edition Abs	600	2014	2015	52537725097	**121870440**
C 600 Sport Edition Abs	600	2014	2014	52537725097	**121870440**
C 650 Gt Abs	650	2012	2019	52537725097	**121870440**
C 650 Gt Edition Abs	650	2014	2015	52537725097	**121870440**
C 650 Sport Abs	650	2016	2019	52537725097	**121870440**
HONDA					
Nss 300 A Forza Abs	300	2013	2017	83590K04932	**121870400**
Nss 300 Forza	300	2013	2017	83590K04932	**121870400**
Fjs 600 A Silver Wing Abs	600	2003	2010	83590MCTD61	**121870350**
Fjs 600 A Sw-T Abs	600	2011	2016	83590MCTD61	**121870350**
Fjs 600 D Silver Wing	600	2003	2006	83590MCTD61	**121870350**
Fjs 600 Silver Wing	600	2001	2002	83590MCTD61	**121870350**
Nc 700 D Integra Dct Abs	700	2012	2012	83590MGSD71	**121870340**
Nc 700 D Integra Dct Abs	700	2012	2013	83590MGSD71	**121870340**
Nc 750 D Integra Dct Abs	750	2014	2015	83590MGSD71	**121870340**
Nc 750 D Integra Dct Abs	750	2016	2018	83590MGSD71	**121870340**
KYMCO					
Downtown 125I	125	2009	2016	00177103	**121870360**
Downtown E4	125	2016	2016	00177103	**121870360**
Downtown I	200	2010	2010	00177103	**121870360**
X Citing	250	2005	2005	00159132	**121870370**
X Citing I	250	2006	2007	00159132	**121870370**
Downtown 300I	300	2009	2009	00177103	**121870360**
Downtown Abs	300	2010	2010	00177103	**121870360**
Downtown Abs I	300	2011	2016	00177103	**121870360**
Downtown I	300	2011	2011	00177103	**121870360**
X Citing 300I	300	2008	2008	00159132	**121870370**
X Citing 300I R	300	2008	2008	00159132	**121870370**
X Citing 300I R	300	2009	2009	00159132	**121870370**
Downtown Abs E4	350	2016	2016	00177103	**121870360**
Downtown I Abs	350	2015	2015	00177103	**121870360**
X Citing	500	2005	2005	00159132	**121870370**
X Citing 500 R	500	2009	2009	00159132	**121870370**
X Citing 500I	500	2006	2007	00159132	**121870370**
X Citing 500I	500	2008	2008	00159132	**121870370**
X Citing 500I R	500	2007	2008	00159132	**121870370**
PIAGGIO					
X10 4T 4V Ie Euro3	125	2012	2015	674301	**121870380**
X9 Evolution	125	2005	2006	621117	**121870430**
X9 Evolution Euro3	125	2007	2007	621117	**121870430**
X9 Evolution	250	2004	2004	621117	**121870430**
X9 Evolution	250	2006	2006	621117	**121870430**
Mp3 300 Lt Business - Sport Abs - Enjoy	300	2014	2016	674301	**121870380**
Mp3 Ie E4 Lt Business - Sport Abs	300	2016	2018	674301	**121870380**
Mp3 Maxi Sport E4 Abs	350	2018	2018	674301	**121870380**
X10 4T 4V Ie Euro3	350	2012	2015	674301	**121870380**
Mp3 Lt Business Abs	500	2014	2016	674301	**121870380**
Mp3 Lt E4 Sport - Business	500	2016	2018	674301	**121870380**
Mp3 Sport Abs	500	2014	2016	674301	**121870380**
X10 4T 4V Ie Euro3	500	2012	2014	674301	**121870380**
X9 Evolution	500	2003	2005	621117	**121870430**
X9 Evolution	500	2006	2007	621117	**121870430**
X9 Evolution Abs	500	2006	2007	621117	**121870430**
Porter	1000	1992	1998	6895087Z82000	**121870410**
Porter D120 E5	1200	2011	2015	6895087Z82000	**121870410**

Modello *Model*	CC	Da *From*	A *To*	OEM	Codice RMS *RMS Code*
Porter Diesel 1200-1400	1200	1995	2000	6895087Z82000	**121870410**
Porter 1000-1300 Pick-Van	1300	1992	2009	6895087Z82000	**121870410**
Porter 16V Van	1300	1998	2007	6895087Z82000	**121870410**
Porter Multitech Euro4 - Euro5 - Euro5+	1300	2010	2015	6895087Z82000	**121870410**
Porter Multitech Euro6 - Euro6-C	1300	2015	2018	6895087Z82000	**121870410**
Porter Up-Date	1300	2009	2010	6895087Z82000	**121870410**
Porter Van Diesel	1400	1998	2005	6895087Z82000	**121870410**
SUZUKI					
An400 Burgman K7-L0	400	2007	2010	45270-05H01-000	**121870330**
An400 Burgman L1	400	2011	2016	45270-05H01-000	**121870330**
An650 Burgman K3-K5	650	2003	2005	45270-10G00-000	**121870320**
An650 Burgman K6-L0	650	2006	2010	45270-10G00-000	**121870320**
An650 Burgman L1	650	2011	2011	45270-10G00-000	**121870320**
An650 Burgman L2	650	2012	2012	45270-10G00-000	**121870320**
YAMAHA					
Yp125R X-Max	125	2008	2009	1B9F478G3000	**121870390**
Yp125R X-Max	125	2014	2014	1SDF478G0000	**121870300**
Yp125R X-Max	125	2015	2016	1SDF478G0000	**121870300**
Yp125Ra X-Max Abs	125	2014	2015	1SDF478G0000	**121870300**
Yp125Ra X-Max Abs	125	2016	2016	1SDF478G0000	**121870300**
Yp125Ra X-Max Abs	125	2017	2017	1SDF478G0000	**121870300**
Yp250R Black X-Max	250	2009	2009	1B9F478G3000	**121870390**
Yp250R X-Max	250	2005	2006	1B9F478G3000	**121870390**
Yp250R X-Max	250	2007	2009	1B9F478G3000	**121870390**
Yp250R X-Max	250	2014	2016	1SDF478G0000	**121870300**
Yp250Ra X-Max Abs	250	2014	2015	1SDF478G0000	**121870300**
Yp250Ra X-Max Abs	250	2016	2016	1SDF478G0000	**121870300**
Yp400R X-Max	400	2013	2014	1SDF478G0000	**121870300**
Yp400R X-Max	400	2015	2016	1SDF478G0000	**121870300**
Yp400R X-Max Momodesign	400	2014	2014	1SDF478G0000	**121870300**
Yp400Ra X-Max Abs	400	2014	2014	1SDF478G0000	**121870300**
Yp400Ra X-Max Abs	400	2015	2017	1SDF478G0000	**121870300**
Yp400Ra X-Max Ironmax Abs	400	2016	2016	1SDF478G0000	**121870300**
Yp400Ra X-Max Momodesign Abs	400	2014	2014	1SDF478G0000	**121870300**
Xp T-Max	500	2008	2008	4B52478G0000	**121870420**
Xp T-Max	500	2009	2011	4B52478G0200	**121870420**
Xp T-Max Abs	500	2008	2011	4B52478G0200	**121870420**
Xp T-Max Abs Sv	500	2010	2011	4B52478G0200	**121870420**
Xp T-Max Sv	500	2011	2011	4B52478G0200	**121870420**
Xp T-Max White Max	500	2010	2010	4B52478G0100	**121870420**
Xp T-Max	530	2012	2012	4B52478G0200	**121870420**
Xp T-Max	530	2013	2014	4B52478G0200	**121870420**
Xp T-Max	530	2015	2016	4B52478G0200	**121870420**
Xp T-Max Abs	530	2012	2012	4B52478G0200	**121870420**
Xp T-Max Abs	530	2013	2014	4B52478G0200	**121870420**
Xp T-Max Abs	530	2015	2016	4B52478G0200	**121870420**
Xp T-Max Sp	530	2015	2015	4B52478G0200	**121870420**
Xp T-Max Sp Abs	530	2015	2016	4B52478G0200	**121870420**
Xp530-A T-Max Sx	530	2017	2017	4B52478G0300	**121870420**
Xp530-A T-Max Sx	530	2018	2018	4B52478G0400	**121870420**
Xp530-A T-Max Sx	530	2019	2019	4B52478G0400	**121870420**
Xp530D-A T-Max Dx	530	2017	2017	4B52478G0300	**121870420**
Xp530D-A T-Max Dx	530	2018	2018	4B52478G0400	**121870420**
Xp530D-A T-Max Dx	530	2019	2019	4B52478G0400	**121870420**
Xp530E-A T-Max	530	2017	2017	4B52478G0300	**121870420**
Xp530E-A T-Max	530	2018	2018	4B52478G0400	**121870420**



MOLLE A GAS

SADDLE GAS SPRINGS

STABILUS 121870300 NEW



Interasse (mm) *Wheelbase (mm)*	Attacco superiore *Upper fastening point*	Attacco inferiore *Lower fastening point*	Forza (N) *Load (N)*
165	 Incastro | *Joint*	 Incastro | *Joint*	620

STABILUS 121870320 NEW



Interasse (mm) *Wheelbase (mm)*	Attacco superiore *Upper fastening point*	Attacco inferiore *Lower fastening point*	Forza (N) *Load (N)*
485	 Ø 8mm	 Ø 8mm	100

STABILUS 121870330 NEW



Interasse (mm) *Wheelbase (mm)*	Attacco superiore *Upper fastening point*	Attacco inferiore *Lower fastening point*	Forza (N) *Load (N)*
330	 Ø 8mm	 Ø 8mm	180

STABILUS 121870340 NEW



Interasse (mm) *Wheelbase (mm)*	Attacco superiore *Upper fastening point*	Attacco inferiore *Lower fastening point*	Forza (N) *Load (N)*
125	 M8	 M8	540

STABILUS 121870350 NEW



Interasse (mm) *Wheelbase (mm)*	Attacco superiore *Upper fastening point*	Attacco inferiore *Lower fastening point*	Forza (N) *Load (N)*
280	 Ø 8mm	 Ø 8mm	120

STABILUS 121870360 NEW



Interasse (mm) *Wheelbase (mm)*	Attacco superiore *Upper fastening point*	Attacco inferiore *Lower fastening point*	Forza (N) *Load (N)*
350	 Ø 8mm	 Ø 8mm	100



STABILUS 121870370 NEW



Interasse (mm) *Wheelbase (mm)*	Attacco superiore *Upper fastening point*	Attacco inferiore *Lower fastening point*	Forza (N) *Load (N)*
285	 M8	 M8	150

STABILUS 121870380 NEW



Interasse (mm) *Wheelbase (mm)*	Attacco superiore *Upper fastening point*	Attacco inferiore *Lower fastening point*	Forza (N) *Load (N)*
205	 M8	 Ø 8mm	400

STABILUS 121870390 NEW



Interasse (mm) *Wheelbase (mm)*	Attacco superiore *Upper fastening point*	Attacco inferiore *Lower fastening point*	Forza (N) *Load (N)*
128	 Ø 6mm	 Ø 6mm	400

STABILUS 121870400 NEW



Interasse (mm) *Wheelbase (mm)*	Attacco superiore *Upper fastening point*	Attacco inferiore *Lower fastening point*	Forza (N) *Load (N)*
115,5	 Incastro | *Joint*	 Incastro | *Joint*	720

STABILUS 121870410 NEW



Interasse (mm) *Wheelbase (mm)*	Attacco superiore *Upper fastening point*	Attacco inferiore *Lower fastening point*	Forza (N) *Load (N)*
690	 Incastro | *Joint*	 Incastro | *Joint*	470

STABILUS 121870420 NEW



Interasse (mm) *Wheelbase (mm)*	Attacco superiore *Upper fastening point*	Attacco inferiore *Lower fastening point*	Forza (N) *Load (N)*
155	 M8	 Ø 8mm	400



MOLLE A GAS

SADDLE GAS SPRINGS

STABILUS 121870430 NEW



Interasse (mm) *Wheelbase (mm)*	Attacco superiore *Upper fastening point*	Attacco inferiore *Lower fastening point*	Forza (N) *Load (N)*
265	 Ø 6mm	 Ø 6mm	150

STABILUS 121870440 NEW



Interasse (mm) *Wheelbase (mm)*	Attacco superiore *Upper fastening point*	Attacco inferiore *Lower fastening point*	Forza (N) *Load (N)*
155	 Incastro | *Joint*	 Incastro | *Joint*	400



121830940

TAMPONE SELLA | *SADDLE BUFFER*
Confezioni 5 pz. | *5 Pcs Packing*

PIAGGIO 125-150-200: Vespa PX
VN1-VN2-VS1
R.O. 267420



121858400

PERNO ANCORAGGIO SELLA TIPO CORTO | *SADDLE PIN SHORT TYPE*
Filetto M7 | *Thread M7*
Lunghezza totale 44 mm | *Total lenght 44 mm*
Confezione 5 pz. | *5 Pcs Packing*

PIAGGIO 50: Vespa 50 (Vari modelli - *Various models*)
PIAGGIO 125: Vespa Primavera • Vespa Primavera ET3
R.O. 056729



121858410

PERNO ANCORAGGIO SELLA TIPO LUNGO | *SADDLE PIN LONG TYPE*
Filetto M7 | *Thread M7*
Lunghezza totale 73 mm | *Total lenght 73 mm*
Confezione 5 pz. | *5 Pcs Packing*

PIAGGIO 50: Vespa 50 (Vari modelli - Various models)
PIAGGIO 125: Vespa Primavera • Vespa Primavera ET3
R.O. 139318



121858420

PERNO ANCORAGGIO SELLA | *SADDLE PIN*
Filetto M8 | *Thread M8*
Lunghezza totale 45 mm | *Total lenght 45 mm*
Confezione 5 pz. | *5 Pcs Packing*

PIAGGIO 125-150-200: Vespa PX • Vespa PE
R.O. 240165



121860440 NEW

STABILUS

TESTINA SNODO | *SWIVEL HEAD*
Filetto M8 | *Thread M8*
Confezione 2 pz. | *2 Pcs Packing*

APPLICAZIONI VARIE





121830080

GOMMINO LEVA MESSA IN MOTO | *KICKSTART RUBBER*
Confezioni 5 pz. | *5 Pcs Packing*

PIAGGIO: Tutti i modelli Vespa dal 1959 al 1985 - *All Vespa models from 1959 till 1985*
R.O. 241004



121830900

GOMMINO LEVA MESSA IN MOTO | *KICKSTART RUBBER*
Confezioni 5 pz. | *5 Pcs Packing*

PIAGGIO 150: Vespa (Vari modelli - *Various models*)
VBB
R.O. 049642



121855000

SCODELLINO DADO RUOTA POSTERIORE - ANTERIORE | *REAR FRONT WHEEL SHAFT CAP*
Confezioni 5 pz. | *5 Pcs Packing*

APRILIA-DERBI-GILERA-PIAGGIO: Vari modelli - *Various models*
R.O. 194423



121858460

DADO PERNO RUOTA | *WHEEL PIN NUTS*
Confezione 10 pz. | *10 Pcs Packing*

PIAGGIO 50-125-150-200: Vespa PK • Vespa PK XL • Vespa PX • Vespa PXE Arcobaleno • Vespa Primavera
R.O. 015222



121860340

DADO CERCHIO RUOTA | *WHEEL NUT*
Confezione 4 pz. | *4 Pcs Packing*

PIAGGIO 125: Vespa
R.O. 019411



121850441

KIT DADO RONDELLA RUOTA POSTERIORE | *REAR WHEEL SHAFT NUT AND WASHER SET*

MINARELLI-YAMAHA 50



121855050

RONDELLA PIANA CON INCAVO INTERNO PER DADO FISSAGGIO RUOTA POSTERIORE | *REAR WHEEL SHAFT WASHER*
Confezione 10 pz. | *10 Pcs Packing*
Ø Interno 14-17 mm | *Internal Ø 14-17 mm*
Ø Esterno 28 mm | *External Ø 28 mm*
Spessore 5 mm | *Thickness 5 mm*

MINARELLI-YAMAHA 50



121858580

DISTANZIALE PERNO RUOTA | *PIN SPACER*
Confezione 5 pz. | *5 Pcs Packing*

PIAGGIO 125-150-180: Vespa GL • Vespa Sprint • Vespa Super • Vespa Rally
R.O. 99474



121858450

VITE + DADO MANUBRIO | *HANDLE BAR SCREW + NUT*
Confezione 5 pz. | *5 Pcs Packing*

PIAGGIO: Vespa
R.O. 0015542-070620





121860023

PIASTRINA FERMA GUAINA | *CABLE PLATE*
Confezione 10 pz. | *10 Pcs Packing*

PIAGGIO 125-150-200: Vespa PX • Vespa PXE Arcobaleno
VNX-VLX-VSX-VNX2-VLX2-VSX2
R.O. 0 23854



121860373

FERMO DADO RUOTA ANTERIORE | *FRONT WHEEL NUT LOCK*
Confezione 10 pz. | *10 Pcs Packing*

PIAGGIO 125-150-200: Vespa PX
VNX2-VNX1-VSX1
R.O. 177609



142580170

FLANGIA RUOTA POSTERIORE | *REAR WHEEL FLANGE*

PIAGGIO 50: Ciao • Si • Bravo • Grillo
R.O. 124963



225180180

ASSE RUOTA ANTERIORE | *FRONT AXLE*

PIAGGIO 50-90-125: Vespa Primavera • Vespa Primavera ET3
V5A2T-V5B1T-VMA2-V9A1
R.O. 100483



121850360

DADO FRESATO FISSA TAMBURO RUOTA POSTERIORE | *REAR WHEEL DRUM SECURING NUT*
Confezione 5 pz. | *5 Pcs Packing*

PIAGGIO 50-90-125: Vespa Primavera ET3
R.O. 002314





KIT GOMMINI TELAIO - *FRAME RUBBERS KIT*

142640500



VESPA 50-90
Composto da pezzi 22 | *Made by 22 pcs*

Codice RMS *RMS Code*	Descrizione *Description*	Quantità *Quantity*
121830290	Tappo mozzo anteriore	*Plug hub*	1
121830320	Tassello feritoia volano	*Flywheel plug*	1
121830340	Asta rubinetto benzina	*Tie rod*	1
121830350	Ammortizzatore posteriore	*Rear damper*	1
121830370	Tappo benzina	*Fuel cap*	1
121830380	Tampone di scontro carter	*Buffer*	2
121830410	Passacavo telaio	*Frame buffer*	1
121830430	Clacson	*Horn*	1
121830490	Sportello motore	*Engine door*	6
121830460	Fondello bloccasterzo	*Lock*	1
121830500	Pedale freno	*Brake*	1
121830530	Rubinetto benzina	*Fuel cock*	1
121830560	Bobina	*Coil*	1
121830600	Ammortizzatore anteriore	*Front damper*	2

142640540



VESPA GL SPRINT
Composto da pezzi 19 | *Made by 19 pcs*

Codice RMS *RMS Code*	Descrizione *Description*	Quantità *Quantity*
100706210	Coperchio frizione	*Clutch cover*	1
121830090	Passacavo	*Grommet*	1
121830300	Tappo benzina	*Fuel cap*	1
121830330	Depuratore	*Air cleaner*	1
121830340	Asta rubinetto	*Tie rod*	1
121830350	Ammortizzatore posteriore	*Rear damper*	1
121830360	Passacavo telaio	*Frame grommet*	1
121830400	Tampone di scontro carter	*Buffer*	2
121830430	Clacson	*Horn*	1
121850450	Gommino pedale freno	*Pedal Rubber*	1
121830460	Fondello bloccasterzo	*Lock*	1
121830510	Tampone motore	*Engine buffer*	1
121830520	Tampone motore	*Engine buffer*	1
121830530	Rubinetto benzina	*Fuel cock*	1
121830560	Bobina	*Coil*	1
121830843	Cappuccio Candela	*Spark Plug cap*	1
121830900	Leva messa in moto	*Starter lever*	1
142640543	Kit gommini cofano	*Rubber hood kit*	1



142640520



VESPA PX
Composto da pezzi 21 | *Made by 21 pcs*

Codice RMS *RMS Code*	Descrizione *Description*	Quantità *Quantity*
121830230	Cappuccio candela	*Spark plug*	1
121830080	Leva messa in moto	*Kick starter lever*	1
100706210	Coperchio frizione	*Clutch cover*	1
121830090	Passacavo	*Grommet*	1
121830110	Passacavo cofano	*Cowl grommet*	1
121830300	Tappo benzina	*Fuel cap*	1
121830330	Depuratore	*Air cleaner*	1
121830340	Asta rubinetto	*Tie rod*	1
121830350	Ammortizzatore posteriore	*Rear damper*	1
121830360	Passacavo telaio	*Frame grommet*	1
121830400	Tampone di scontro carter	*Buffer*	2
121830420	Tubetto cofano	*Tube cowl*	2
121830460	Fondello bloccasterzo	*Lock*	1
121830470	Soffietto cavo frizione	*Clutch cable folding*	1
121830480	Pedale freno	*Brake pedal*	1
121830510	Tampone motore	*Engine buffer*	1
121830520	Tampone motore	*Engine buffer*	1

142640530



VESPA PK
Composto da pezzi 17 | *Made by 17 pcs*

Codice RMS *RMS Code*	Descrizione *Description*	Quantità *Quantity*
121830230	Cappuccio candela	*Spark plug*	1
121830290	Tappo mozzo anteriore	*Plug hub*	1
121830340	Asta rubinetto benzina	*Tie rod*	1
121830370	Tappo benzina	*Fuel cap*	1
121830390	Tampone di scontro carter	*Buffer*	1
121830480	Pedale freno	*Brake pedal*	1
121830490	Sportello motore	*Engine door*	6
121830530	Rubinetto benzina	*Fuel cock*	1
121830560	Bobina	*Coil*	1
121830570	Cappuccio Centralina	*Ignition Device*	1
121830600	Ammortizzatore anteriore	*Front damper*	2

SOSPENSIONI

SUSPENSIONS
SUSPENSIONES
SUSPENSIONS

Amortisseurs	*Amortiguadores*	*Shock Absorbers*	**AMMORTIZZATORI**	**1340**
Accessoires Amortisseurs - Suspensions	*Accesorios Amortiguadores - Suspensiones*	*Shock Absorbers - Suspensions Accessories*	**ACCESSORI AMMORTIZZATORI - SOSPENSIONI**	**1405**
Kits Fourche	*Kit Horquilla*	*Fork kits*	**KIT FORCELLA**	**1410**



AMMORTIZZATORI SCOOTER - *SCOOTER SHOCK ABSORBERS*

Modello *Model*	CC	Da *From*	A *To*	Telaio *Frame*	Anteriore/Posteriore *Front/Rear*	OEM	Codice RMS *RMS Code*
APRILIA							
Rally	50	1995	2003	MD000\MDH00	Post | *Rear*	AP8203627	**204550052**
Rally Liquid Cooled	50	1996	1999	MDA00\MAD10	Post | *Rear*	AP8203750	**204550052**
Scarabeo	50	1993	1997	HS\LE	Post | *Rear*	AP8203631	**204550031**
Scarabeo	50	1993	1997	HS\LE	Post | *Rear*	AP8203631	**204550032**
Scarabeo	50	1998	1998	PF000\PF0100	Post | *Rear*	AP8203814	**204550041**
Scarabeo	50	1998	1998	PF000\PF0100	Post | *Rear*	AP8203814	**204550042**
Scarabeo	50	1999	1999	PF0\PFG	Post | *Rear*	AP8203932	**204550041**
Scarabeo	50	1999	1999	PF0\PFG	Post | *Rear*	AP8203932	**204550042**
Scarabeo	50	2000	2005	PFG00\TH000	Post | *Rear*	AP8203946	**204550041**
Scarabeo	50	2000	2005	PFG00\TH000	Post | *Rear*	AP8203946	**204550042**
Scarabeo 2T Net	50	2009	2009	THG00	Post | *Rear*	AP8223120	**204550862**
Scarabeo 4T	50	2002	2006	TG000	Post | *Rear*	AP8203997	**204550642**
Scarabeo 4T 4V	50	2010	2012	TGE00	Post | *Rear*	666265	**204550642**
Scarabeo 4T 4V	50	2014	2014	TGG00	Post | *Rear*	668008	**204550642**
Scarabeo 4T 4V Net	50	2009	2009	TGE00	Post | *Rear*	AP8223064	**204550642**
Scarabeo 4T 4V Net	50	2010	2010	TGE00	Post | *Rear*	666265	**204550642**
Scarabeo 4T Restyling Eu3	50	2006	2009	TGA00\TGB00	Post | *Rear*	AP8223064	**204550642**
Scarabeo Quattro	50	2009	2009	TGE00	Post | *Rear*	AP8223064	**204550642**
Scarabeo Street	50	2005	2006	THE00	Post | *Rear*	AP8223120	**204550862**
Scarabeo Street 2T Restyling	50	2006	2009	THG00	Post | *Rear*	AP8223120	**204550862**
Sport City One 2T	50	2008	2011	SBA00\TCA00	Post | *Rear*	856441	**204550452**
Sport City One 4T	50	2008	2010	SB000\SBC00	Post | *Rear*	856441	**204550452**
Sr	50	1993	1993	GP\LB	Post | *Rear*	AP8203631	**204550031**
Sr	50	1993	1993	GP\LB	Post | *Rear*	AP8203631	**204550032**
Sr	50	1994	1996	LF	Post | *Rear*	AP8203631	**204550031**
Sr	50	1994	1996	LF	Post | *Rear*	AP8203631	**204550032**
Sr Iniezione E Carburatore	50	2014	2014	VFB00\VFD00\VFU00	Post | *Rear*	668009	**204550472**
Sr Liquid Cooled	50	1994	1996	LC	Post | *Rear*	AP8203631	**204550031**
Sr Liquid Cooled	50	1994	1996	LC	Post | *Rear*	AP8203631	**204550032**
Sr Motard 2T	50	2012	2014	LBMC	Post | *Rear*	856441	**204550452**
Sr R Factory Ie E Carburatore	50	2010	2014	VFB00\VFD00\VFU00	Post | *Rear*	AP8223036	**204550472**
Sr R, R Factory	50	2004	2009	VFB00\VFD00\VFJ\U	Post | *Rear*	AP8223036	**204550472**
Sr Street	50	2003	2012	TE000\TEA00	Post | *Rear*	AP8223036	**204550472**
Scarabeo 4T	100	2001	2005	SA000\VA000	Post | *Rear*	AP8203997	**204550642**
Scarabeo 4T	100	2010	2012	VAA00\VAC00	Post | *Rear*	666265	**204550642**
Scarabeo 4T	100	2014	2014	VAB00	Post | *Rear*	668008	**204550642**
Scarabeo 4T Net	100	2009	2009	VAC\VAA	Post | *Rear*	AP8223064	**204550642**
Scarabeo 4T Net Eu3	100	2010	2010	ZD4VAC\ZD4VAA	Post | *Rear*	666265	**204550642**
Scarabeo 4T Restyling	100	2006	2009	VAA00\VAC00	Post | *Rear*	AP8223064	**204550642**
Scarabeo Motore Minarelli	100	2000	2000	REA0	Post | *Rear*	AP8203946	**204550041**
Scarabeo Motore Minarelli	100	2000	2000	REA0	Post | *Rear*	AP8203946	**204550042**
Scarabeo Motore Yamaha	100	2000	2000	RE00	Post | *Rear*	AP8203946	**204550041**
Scarabeo Motore Yamaha	100	2000	2000	RE00	Post | *Rear*	AP8203946	**204550042**
Scarabeo Ie Light	125	2009	2010	RBG00\RBH00	Post | *Rear*	JC62100X92000	**204550442**
Scarabeo Light	125	2007	2008	RB000\RBA00	Post | *Rear*	JC62100X92000	**204550442**
Scarabeo Motore Rotax	125	1999	2004	PC000\PCA00\SD000	Post | *Rear*	AP8163188	**204550602**
Sport City	125	2004	2006	VB000\VBA00	Post | *Rear*	AP8163551	**204550462**
Sport City	125	2004	2006	VB000\VBA00	Post | *Rear*	AP8163551	**204550463**
Sport City Cube	125	2008	2010	VBE00\VBG00	Post | *Rear*	AP8163551	**204550462**
Sport City Cube	125	2008	2010	VBE00\VBG00	Post | *Rear*	AP8163551	**204550463**
Sport City Euro3	125	2006	2008	VB002\VBA01\VBB00	Post | *Rear*	AP8163551	**204550462**
Sport City Euro3	125	2006	2008	VB002\VBA01\VBB00	Post | *Rear*	AP8163551	**204550463**
Sport City Street	125	2012	2012	VBM00	Post | *Rear*	AP8163551	**204550462**
Sport City Street	125	2012	2012	VBM00	Post | *Rear*	AP8163551	**204550463**
Sr Max	125	2011	2014	PM35700	Post | *Rear*	647524	**204550752**



Modello *Model*	CC	Da *From*	A *To*	Telaio *Frame*	Anteriore/Posteriore *Front/Rear*	OEM	Codice RMS *RMS Code*
Sr Max	125	2011	2014	PM35700	Post | *Rear*	647524	**204550753**
Scarabeo Ie Light 125-200	200	2011	2012	RBL00\RBM00	Post | *Rear*	JC62100X92000	**204550442**
Scarabeo Light	250	2006	2008	VRB00	Post | *Rear*	AP8163551	**204550462**
Scarabeo Light	250	2006	2008	VRB00	Post | *Rear*	AP8163551	**204550463**
Sport City Cube	250	2008	2012	VBH00\VBL00	Post | *Rear*	AP8163551	**204550462**
Sport City Cube	250	2008	2012	VBH00\VBL00	Post | *Rear*	AP8163551	**204550463**
Scarabeo Light	300	2009	2010	VRG00	Post | *Rear*	AP8163551	**204550462**
Scarabeo Light	300	2009	2010	VRG00	Post | *Rear*	AP8163551	**204550463**
Sport City Street	300	2012	2012	VBR00	Post | *Rear*	AP8163551	**204550462**
Sport City Street	300	2012	2012	VBR00	Post | *Rear*	AP8163551	**204550463**
Sr Max	300	2011	2014	PM35600	Post | *Rear*	647524	**204550752**
Sr Max	300	2011	2014	PM35600	Post | *Rear*	647524	**204550753**
Scarabeo Light 400-500	400	2006	2008	VR000\VRA00\VRE00	Post | *Rear*	AP8163503	**204550732**
Scarabeo	500	2003	2006	RT00	Post | *Rear*	AP8163328	**204550742**
Scarabeo Light 400-500	500	2006	2008	VR000\VRA00\VRE00	Post | *Rear*	AP8163503	**204550732**
GILERA							
Easy Moving	50	1995	1996	SSP2T	Post | *Rear*	2729604	**204550061**
Easy Moving	50	1995	1996	SSP2T	Post | *Rear*	2729604	**204550062**
Nexus Euro3	125	2007	2008	M35500	Post | *Rear*	647524	**204550752**
Nexus Euro3 Ie	125	2008	2010	M35700	Post | *Rear*	647524	**204550752**
Runner 4T St Euro3	125	2008	2016	M46301	Post | *Rear*	56312R000C	**204551092**
Runner Vx	125	2005	2006	M46100	Post | *Rear*	56312R000C	**204551092**
Runner Vx 4T Euro3	125	2006	2007	M46300	Post | *Rear*	56312R000C	**204551092**
Runner Vx Race	125	2006	2006	M46100	Post | *Rear*	56312R000C	**204551092**
Runner Vx Sc	125	2006	2007	M46100	Post | *Rear*	56312R000C	**204551092**
Runner Vx-Vxr 125-180	125	2000	2001	M2400	Post | *Rear*	59753100E4	**204551092**
Runner Vx-Vxr 125-200	125	2002	2004	M240\241\243	Post | *Rear*	59753100E4	**204551092**
Runner Vx-Vxr 125-180	180	2000	2001	M2400	Post | *Rear*	59753100E4	**204551092**
Runner Vxr	200	2005	2006	M46200	Post | *Rear*	56312R000C	**204551092**
Runner Vxr 4T St Euro3	200	2008	2011	M46401	Post | *Rear*	56312R000C	**204551092**
Runner Vxr Euro3	200	2007	2007	M46400	Post | *Rear*	56312R000C	**204551092**
Runner Vxr Race	200	2005	2006	M46200	Post | *Rear*	56312R000C	**204551092**
Runner Vx-Vxr 125-200	200	2002	2004	M240\241\243	Post | *Rear*	59753100E4	**204551092**
Nexus Euro3	250	2006	2006	M35300	Post | *Rear*	647524	**204550752**
Nexus Euro3	250	2007	2007	M35400	Post | *Rear*	647524	**204550752**
Nexus Sp Euro3	250	2006	2007	M35300	Post | *Rear*	647524	**204550752**
Nexus Euro3	300	2008	2011	M35600	Post | *Rear*	647524	**204550752**
HERCULES							
Reggae 50	50	1995	1995	427	Post | *Rear*	-	**204550191**
Reggae 50	50	1995	1995	427	Post | *Rear*	-	**204550192**
Splinter 50	50	1995	1995	427	Post | *Rear*	-	**204550191**
Splinter 50	50	1995	1995	427	Post | *Rear*	-	**204550192**
HONDA							
Pcx 125 Ww125	125	2013	2013	JF47E	Post | *Rear*	52400-KWN-711	**204550712**
Pcx 125 Ww125Ex2	125	2010	2014	JF28A	Post | *Rear*	52400-KWN-711	**204550712**
Ses 125 Dylan	125	2002	2006	JF10A	Post | *Rear*	52400-KTF-641	**204550311**
Ses 125 Dylan	125	2002	2006	JF10A	Post | *Rear*	52400-KTF-641	**204550312**
Ses 125 Dylan	125	2002	2006	JF10A	Post | *Rear*	52400-KTF-641	**204550313**
Sh 125	125	2001	2004	JF09A	Post | *Rear*	52400-KTF-641	**204550311**
Sh 125	125	2001	2004	JF09A	Post | *Rear*	52400-KTF-641	**204550312**
Sh 125	125	2001	2004	JF09A	Post | *Rear*	52400-KTF-641	**204550313**
Sh 125 A I Abs	125	2013	2015	JF41B	Post | *Rear*	52400-K01-901	**204550722**
Sh 125 A I Abs	125	2013	2015	JF41B	Post | *Rear*	52400-K01-901	**204550723**
Sh 125 A I Abs	125	2016	2016	JF41A	Post | *Rear*	52400-K01-901	**204550722**
Sh 125 A I Abs	125	2016	2016	JF41A	Post | *Rear*	52400-K01-901	**204550723**
Sh 125 A I Abs	125	2017	2017	-	Post | *Rear*	52400-K01-901	**204550722**
Sh 125 A I Abs	125	2017	2017	-	Post | *Rear*	52400-K01-901	**204550723**
Sh 125 Anc I Mode	125	2014	2016	JF51A	Post | *Rear*	52400-K29-901	**204550852**



AMMORTIZZATORI

SHOCK ABSORBERS

Modello *Model*	**CC**	**Da** *From*	**A** *To*	**Telaio** *Frame*	**Anteriore/Posteriore** *Front/Rear*	**OEM**	**Codice RMS** *RMS Code*
Sh 125 D I	125	2009	2009	JF23A	Post I *Rear*	52400-KTF-641	**204550311**
Sh 125 D I	125	2009	2009	JF23A	Post I *Rear*	52400-KTF-641	**204550312**
Sh 125 D I	125	2009	2009	JF23A	Post I *Rear*	52400-KTF-641	**204550313**
Sh 125 I	125	2005	2008	JF14A	Post I *Rear*	52400-KTF-641	**204550311**
Sh 125 I	125	2005	2008	JF14A	Post I *Rear*	52400-KTF-641	**204550312**
Sh 125 I	125	2005	2008	JF14A	Post I *Rear*	52400-KTF-641	**204550313**
Sh 125 I	125	2009	2012	JF23B	Post I *Rear*	52400-KTF-641	**204550311**
Sh 125 I	125	2009	2012	JF23B	Post I *Rear*	52400-KTF-641	**204550312**
Sh 125 I	125	2009	2012	JF23B	Post I *Rear*	52400-KTF-641	**204550313**
Sh 125 I	125	2013	2013	JF23A	Post I *Rear*	52400-K01-901	**204550722**
Sh 125 I	125	2013	2013	JF23A	Post I *Rear*	52400-K01-901	**204550723**
Sh 125 I	125	2016	2016	JF41A	Post I *Rear*	52400-K01-901	**204550722**
Sh 125 I	125	2016	2016	JF41A	Post I *Rear*	52400-K01-901	**204550723**
Pcx 150 Ww150	150	2012	2012	KF12A	Post I *Rear*	52400-KWN-711	**204550712**
Pcx 150 Ww150	150	2013	2013	KF15A	Post I *Rear*	52400-KWN-711	**204550712**
Ses 150 Dylan	150	2002	2004	KF05A	Post I *Rear*	52400-KTF-641	**204550311**
Ses 150 Dylan	150	2002	2004	KF05A	Post I *Rear*	52400-KTF-641	**204550312**
Ses 150 Dylan	150	2002	2004	KF05A	Post I *Rear*	52400-KTF-641	**204550313**
Sh 150	150	2001	2004	KF04A	Post I *Rear*	52400-KTF-641	**204550311**
Sh 150	150	2001	2004	KF04A	Post I *Rear*	52400-KTF-641	**204550312**
Sh 150	150	2001	2004	KF04A	Post I *Rear*	52400-KTF-641	**204550313**
Sh 150 A I Abs	150	2013	2016	KF13B	Post I *Rear*	52400-K01-901	**204550722**
Sh 150 A I Abs	150	2013	2016	KF13B	Post I *Rear*	52400-K01-901	**204550723**
Sh 150 A I Abs	150	2017	2017	-	Post I *Rear*	52400-K01-901	**204550722**
Sh 150 A I Abs	150	2017	2017	-	Post I *Rear*	52400-K01-901	**204550723**
Sh 150 D I	150	2009	2011	KF10A	Post I *Rear*	52400-KTF-641	**204550311**
Sh 150 D I	150	2009	2011	KF10A	Post I *Rear*	52400-KTF-641	**204550312**
Sh 150 D I	150	2009	2011	KF10A	Post I *Rear*	52400-KTF-641	**204550313**
Sh 150 I	150	2005	2008	KF08A	Post I *Rear*	52400-KTF-641	**204550311**
Sh 150 I	150	2005	2008	KF08A	Post I *Rear*	52400-KTF-641	**204550312**
Sh 150 I	150	2005	2008	KF08A	Post I *Rear*	52400-KTF-641	**204550313**
Nss 250 A Forza Abs	250	2008	2011	MF10B	Post I *Rear*	52400-KTW-903	**204550701**
Nss 250 A Forza Abs	250	2008	2011	MF10B	Post I *Rear*	52400-KTW-903	**204550702**
Nss 250 A Forza Abs	250	2008	2011	MF10B	Post I *Rear*	52400-KTW-903	**204550703**
Nss 250 Ex Forza Abs	250	2005	2006	MF08B	Post I *Rear*	52400-KTW-903	**204550701**
Nss 250 Ex Forza Abs	250	2005	2006	MF08B	Post I *Rear*	52400-KTW-903	**204550702**
Nss 250 Ex Forza Abs	250	2005	2006	MF08B	Post I *Rear*	52400-KTW-903	**204550703**
Nss 250 X Forza	250	2007	2013	MF08A	Post I *Rear*	52400-KTW-903	**204550701**
Nss 250 X Forza	250	2007	2013	MF08A	Post I *Rear*	52400-KTW-903	**204550702**
Nss 250 X Forza	250	2007	2013	MF08A	Post I *Rear*	52400-KTW-903	**204550703**
Sh 300 A I Abs	300	2007	2010	NF02B	Post I *Rear*	52400-KTW-903	**204550701**
Sh 300 A I Abs	300	2007	2010	NF02B	Post I *Rear*	52400-KTW-903	**204550702**
Sh 300 A I Abs	300	2007	2010	NF02B	Post I *Rear*	52400-KTW-903	**204550703**
Sh 300 A I Abs	300	2011	2015	NF02D	Post I *Rear*	52400-KTW-903	**204550701**
Sh 300 A I Abs	300	2011	2015	NF02D	Post I *Rear*	52400-KTW-903	**204550702**
Sh 300 A I Abs	300	2011	2015	NF02D	Post I *Rear*	52400-KTW-903	**204550703**
Sh 300 I	300	2008	2010	NF02A	Post I *Rear*	52400-KTW-903	**204550701**
Sh 300 I	300	2008	2010	NF02A	Post I *Rear*	52400-KTW-903	**204550702**
Sh 300 I	300	2008	2010	NF02A	Post I *Rear*	52400-KTW-903	**204550703**
KYMCO							
Agility 4T Carry	50	2011	2011	U65010	Post I *Rear*	00166107	**204550592**
Agility 4T R12	50	2007	2008	U60050	Post I *Rear*	00166107	**204550592**
Agility 4T R16	50	2008	2009	C10000	Post I *Rear*	00152232	**204550582**
Agility 4T R16	50	2012	2012	C10000	Post I *Rear*	00152232	**204550582**
Agility R12	50	2005	2005	U60000	Post I *Rear*	00166107	**204550592**
Agility R12 Ecs	50	2016	2016	U68000	Post I *Rear*	00166107	**204550592**
Agility Rs	50	2009	2009	U600B0	Post I *Rear*	00166107	**204550592**
Agility Plus	125	2014	2014	C21000	Post I *Rear*	00152397	**204551082**



Modello *Model*	CC	Da *From*	A *To*	Telaio *Frame*	Anteriore/Posteriore *Front/Rear*	OEM	Codice RMS *RMS Code*
Agility Plus E4	125	2016	2016	C41000	Post I *Rear*	00152397	**204551082**
Agility R16	125	2008	2008	C20000	Post I *Rear*	00152239	**204550522**
Agility R16	125	2008	2008	C20000	Post I *Rear*	00152239	**204550523**
Agility R16	125	2009	2009	C20000	Post I *Rear*	00152239	**204550522**
Agility R16	125	2009	2009	C20000	Post I *Rear*	00152239	**204550523**
Agility R16	125	2012	2012	C20000	Post I *Rear*	00152371	**204550522**
Agility R16	125	2012	2012	C20000	Post I *Rear*	00152371	**204550523**
Dink 125 Euro3	125	2006	2007	T90000	Post I *Rear*	00165937	**204550572**
Dink Classic 125-150	125	2002	2002	SH25BB\SH30BB	Post I *Rear*	00165936	**204550372**
Dink Classic 125-150 Euro2	125	2003	2003	SH25BC\SH30BC	Post I *Rear*	00165936	**204550372**
K-Xct I	125	2012	2014	D81000	Post I *Rear*	00152380N1	**204550762**
K-Xct I	125	2012	2014	D81000	Post I *Rear*	00152380N1	**204550763**
People Gti	125	2010	2010	V41000	Post I *Rear*	00152280NE	**204551142**
People Gti	125	2014	2014	V41000	Post I *Rear*	00152280NE	**204551142**
People Gti E4 I	125	2016	2016	V41010	Post I *Rear*	00152280NE	**204551142**
People S Dd Euro3	125	2007	2008	D10000	Post I *Rear*	00166374NE	**204550542**
Agility R16	150	2008	2008	C30000	Post I *Rear*	00152239	**204550522**
Agility R16	150	2008	2008	C30000	Post I *Rear*	00152239	**204550523**
Agility R16	150	2009	2009	C30000	Post I *Rear*	00152239	**204550522**
Agility R16	150	2009	2009	C30000	Post I *Rear*	00152239	**204550523**
Agility R16 Plus E4	150	2016	2016	C42000	Post I *Rear*	00152397	**204551082**
Dink Classic 125-150	150	2002	2002	SH25BB\SH30BB	Post I *Rear*	00165936	**204550372**
Dink Classic 125-150 Euro2	150	2003	2003	SH25BC\SH30BC	Post I *Rear*	00165936	**204550372**
Agility 200I R16	200	2010	2010	C31000	Post I *Rear*	00152274	**204550522**
Agility 200I R16	200	2010	2010	C31000	Post I *Rear*	00152274	**204550523**
Agility I Plus	200	2014	2014	C32000	Post I *Rear*	00152397	**204551082**
Agility R16	200	2012	2012	C31000	Post I *Rear*	00152371	**204550522**
Agility R16	200	2012	2012	C31000	Post I *Rear*	00152371	**204550523**
Dink Classic	200	2004	2004	SH40AA	Post I *Rear*	00165936	**204550372**
Dink Euro3I	200	2006	2007	T91000	Post I *Rear*	00165937	**204550572**
Downtown I	200	2010	2010	V22000	Post I *Rear*	00152254	**204550532**
Downtown I	200	2010	2010	V22000	Post I *Rear*	00152254	**204550533**
People Gti	200	2010	2010	V42000	Post I *Rear*	00152277	**204550562**
People Gti	200	2014	2014	V42000	Post I *Rear*	00152277	**204550562**
People S 200I	200	2007	2007	D12000	Post I *Rear*	00166374NE	**204550542**
People S 250I	250	2007	2007	D21000	Post I *Rear*	00166375NE	**204550552**
Downtown 300I	300	2009	2009	V20000	Post I *Rear*	00152254	**204550532**
Downtown 300I	300	2009	2009	V20000	Post I *Rear*	00152254	**204550533**
Downtown Abs	300	2010	2010	V20010	Post I *Rear*	00152254	**204550532**
Downtown Abs	300	2010	2010	V20010	Post I *Rear*	00152254	**204550533**
Downtown Abs I	300	2011	2016	V20030	Post I *Rear*	00152254	**204550532**
Downtown Abs I	300	2011	2016	V20030	Post I *Rear*	00152254	**204550533**
Downtown I	300	2011	2011	V20020	Post I *Rear*	00152254	**204550532**
Downtown I	300	2011	2011	V20020	Post I *Rear*	00152254	**204550533**
K-Xct I	300	2012	2012	D80000	Post I *Rear*	00152380N1	**204550762**
K-Xct I	300	2012	2012	D80000	Post I *Rear*	00152380N1	**204550763**
K-Xct I Abs	300	2014	2014	D8000100	Post I *Rear*	00152380N1	**204550762**
K-Xct I Abs	300	2014	2014	D8000100	Post I *Rear*	00152380N1	**204550763**
People Gti	300	2010	2010	V40000	Post I *Rear*	00152277	**204550562**
People Gti	300	2011	2011	V40020	Post I *Rear*	00152277	**204550562**
People Gti	300	2014	2014	V40020	Post I *Rear*	00152277	**204550562**
People Gti Abs	300	2012	2012	V40010	Post I *Rear*	00152277	**204550562**
People Gti Abs	300	2014	2014	V40010	Post I *Rear*	00152277	**204550562**
People Gti Abs E4	300	2016	2016	C80000	Post I *Rear*	00152277	**204550562**
People S 300I	300	2008	2008	D22000	Post I *Rear*	00166375NE	**204550552**
X Citing 300I	300	2008	2008	T72000	Post I *Rear*	00152234	**204550832**
X Citing 300I R	300	2008	2008	T72001	Post I *Rear*	00152234	**204550832**
X Citing 300I R	300	2009	2009	T72011	Post I *Rear*	00152234	**204550832**



AMMORTIZZATORI

SHOCK ABSORBERS

Modello *Model*	**CC**	**Da** *From*	**A** *To*	**Telaio** *Frame*	**Anteriore/Posteriore** *Front/Rear*	**OEM**	**Codice RMS** *RMS Code*
X Citing 500 R	500	2009	2009	T70021	Post | *Rear*	00166176	**204550842**
X Citing 500I	500	2008	2008	T70020	Post | *Rear*	00166176	**204550842**
X Citing 500I R	500	2007	2008	T70030	Post | *Rear*	00166176	**204550842**
MALAGUTI							
Centro Base	50	1993	1994	36	Post | *Rear*	01003100	**204550132**
Centro SI	50	1994	1998	36T	Post | *Rear*	01003100	**204550132**
Centro SI Kat	50	1999	2000	4900000	Post | *Rear*	01003100	**204550132**
F10 Ac	50	2008	2008	880201	Post | *Rear*	01004603	**204550122**
F10 Ac Eco	50	2009	2010	88003	Post | *Rear*	01004603	**204550122**
F10 Jet Line	50	1992	1998	35	Post | *Rear*	01004603	**204550122**
F10 Kat	50	1999	2000	48	Post | *Rear*	01004603	**204550122**
F10 Restyling Eu1	50	2001	2002	48	Post | *Rear*	01004603	**204550122**
F10 Restyling Eu2-2.3	50	2003	2004	48\48000	Post | *Rear*	01004603	**204550122**
F10 Restyling Euro2	50	2002	2003	48000	Post | *Rear*	01004603	**204550122**
F10 Restyling Euro2	50	2006	2006	48000	Post | *Rear*	01004603	**204550122**
F12 Aria Restyling Euro 2	50	2006	2006	46000	Post | *Rear*	01003408	**204550142**
F12 Lc Restyling Euro 2	50	2006	2006	62000	Post | *Rear*	01003408	**204550142**
F12 Phantom	50	1994	1998	40	Post | *Rear*	01003401	**204550142**
F12 Phantom Euro1	50	1999	2000	4600000	Post | *Rear*	01003401	**204550142**
F12 Phantom Lc	50	1994	1998	41	Post | *Rear*	01003401	**204550142**
F12 Phantom Lc Euro1	50	1999	2000	4700000	Post | *Rear*	01003408	**204550142**
F12 Phantom Lc Restyling Eu1	50	2001	2002	4700000	Post | *Rear*	01003408	**204550142**
F12 Phantom Lc Restyling Eu2	50	2002	2002	6200000	Post | *Rear*	01003408	**204550142**
F12 Phantom Lc Restyling Eu2-2.3	50	2003	2004	6200000	Post | *Rear*	01003408	**204550142**
F12 Phantom Lc Twin Disks	50	1998	1998	41	Post | *Rear*	01003408	**204550142**
F12 Phantom Restyling Eu1	50	2001	2002	4600000	Post | *Rear*	01003408	**204550142**
F12 Phantom Restyling Eu2	50	2002	2002	4600000	Post | *Rear*	01003408	**204550142**
F12 Phantom Restyling Eu2-2.3	50	2003	2004	4600000	Post | *Rear*	01003408	**204550142**
Yesterday - Yesterday Euro	50	1997	2000	45	Post | *Rear*	01004603	**204550122**
MBK							
Cw Booster	50	2001	2002	5NT	Post | *Rear*	4VUF22100000	**204550161**
Cw Booster	50	2001	2002	5NT	Post | *Rear*	4VUF22100000	**204550162**
Cw Booster Spirit	50	1996	1998	4VU	Post | *Rear*	4VUF22100000	**204550161**
Cw Booster Spirit	50	1996	1998	4VU	Post | *Rear*	4VUF22100000	**204550162**
Cw Booster Spirit (Ita)	50	1999	1999	4VU9	Post | *Rear*	4VUF22100000	**204550161**
Cw Booster Spirit (Ita)	50	1999	1999	4VU9	Post | *Rear*	4VUF22100000	**204550162**
Cw Booster Spirit (Ita)	50	2000	2000	5LE\5MM	Post | *Rear*	4VUF22100000	**204550161**
Cw Booster Spirit (Ita)	50	2000	2000	5LE\5MM	Post | *Rear*	4VUF22100000	**204550162**
Cw Booster Spirit Euro2	50	2002	2002	5RH2	Post | *Rear*	4VUF22100000	**204550161**
Cw Booster Spirit Euro2	50	2002	2002	5RH2	Post | *Rear*	4VUF22100000	**204550162**
Cw Booster Spirit Euro2	50	2003	2003	5XW\5XX	Post | *Rear*	4VUF22100000	**204550161**
Cw Booster Spirit Euro2	50	2003	2003	5XW\5XX	Post | *Rear*	4VUF22100000	**204550162**
Yn R Ovetto (Che-Ita)	50	1997	2001	5AD\5MR	Post | *Rear*	5KKF22100033	**204550181**
Yn R Ovetto (Che-Ita)	50	1997	2001	5AD\5MR	Post | *Rear*	5KKF22100033	**204550182**
Yn R Ovetto Euro1	50	2002	2004	5RN	Post | *Rear*	5KKF22100033	**204550181**
Yn R Ovetto Euro1	50	2002	2004	5RN	Post | *Rear*	5KKF22100033	**204550182**
Yn R Ovetto Euro2	50	2002	2003	5RN	Post | *Rear*	5KKF22100033	**204550181**
Yn R Ovetto Euro2	50	2002	2003	5RN	Post | *Rear*	5KKF22100033	**204550182**
Yn Ovetto	100	2000	2002	5KK	Post | *Rear*	5KKF22100033	**204550181**
Yn Ovetto	100	2000	2002	5KK	Post | *Rear*	5KKF22100033	**204550182**
PEUGEOT							
Buxy 50	50	1995	1997	VGA 427	Post | *Rear*	-	**204550191**
Buxy 50	50	1995	1997	VGA 427	Post | *Rear*	-	**204550192**
Buxy 50 Rs	50	1996	1997	VGA 427	Post | *Rear*	-	**204550191**
Buxy 50 Rs	50	1996	1997	VGA 427	Post | *Rear*	-	**204550192**
Speedake 50	50	1995	1997	VGA 427	Post | *Rear*	-	**204550191**
Speedake 50	50	1995	1997	VGA 427	Post | *Rear*	-	**204550192**
Geopolis 125 Ie Evolution Urban Abs	125	2008	2012	VGA N2AABA	Post | *Rear*	770375	**204550812**



Modello *Model*	CC	Da *From*	A *To*	Telaio *Frame*	Anteriore/Posteriore *Front/Rear*	OEM	Codice RMS *RMS Code*
Geopolis 125 Ie Executive Abs	125	2007	2007	VGA N2AAAA	Post | *Rear*	770375	**204550812**
Geopolis 125 Ie Executive Abs	125	2008	2010	VGA N2AABA	Post | *Rear*	770375	**204550812**
Geopolis 125 Ie Premium	125	2007	2007	VGA N2AAAA	Post | *Rear*	770375	**204550812**
Geopolis 125 Ie Premium	125	2008	2012	VGA N2AABA	Post | *Rear*	770375	**204550812**
Geopolis 125 Rs Ie Premium	125	2007	2007	VGA N2AAAA	Post | *Rear*	770375	**204550812**
Geopolis 125 Rs Ie Premium	125	2008	2011	VGA N2AABA	Post | *Rear*	770375	**204550812**
Tweet 125	125	2011	2013	VGA LW2AAA	Post | *Rear*	803417N	**204551102**
Tweet 125	125	2014	2014	-	Post | *Rear*	803417N	**204551102**
Tweet 125 Abs	125	2018	2019	-	Post | *Rear*	803417N	**204551102**
Tweet 125 Active Sbc	125	2018	2018	-	Post | *Rear*	803417N	**204551102**
Tweet 125 Allure	125	2016	2016	-	Post | *Rear*	803417N	**204551102**
Tweet 125 Allure Sbc	125	2018	2018	-	Post | *Rear*	803417N	**204551102**
Tweet 125 Double Black	125	2016	2016	-	Post | *Rear*	803417N	**204551102**
Tweet 125 Evo	125	2015	2016	-	Post | *Rear*	803417N	**204551102**
Tweet 125 Ie Double Black Sbc	125	2017	2017	-	Post | *Rear*	803417N	**204551102**
Tweet 125 Ie Paris Sbc	125	2017	2017	-	Post | *Rear*	803417N	**204551102**
Tweet 125 Paris	125	2016	2017	-	Post | *Rear*	803417N	**204551102**
Tweet 125 Pro	125	2014	2016	-	Post | *Rear*	803417N	**204551102**
Tweet 125 Pro Sbc	125	2017	2017	-	Post | *Rear*	803417N	**204551102**
Tweet 125 Rs	125	2011	2012	VGA LW2AAA	Post | *Rear*	803417N	**204551102**
Tweet 125 Rs	125	2013	2016	-	Post | *Rear*	803417N	**204551102**
Tweet 125 Rs Sbc	125	2017	2018	-	Post | *Rear*	803417N	**204551102**
Tweet 125 Sbc	125	2017	2019	-	Post | *Rear*	803417N	**204551102**
Geopolis 250 Ie Evolution Urban Abs	250	2010	2011	VGA N2ADAA	Post | *Rear*	769092	**204550822**
Geopolis 250 Ie Executive Abs	250	2007	2009	VGA N2ADAA	Post | *Rear*	769092	**204550822**
Geopolis 250 Ie Premium	250	2006	2011	VGA N2ADAA	Post | *Rear*	769092	**204550822**
Geopolis 250 Ie Rs Premium	250	2007	2011	VGA N2ADAA	Post | *Rear*	769092	**204550822**
Geopolis 300 Ie Evolution	300	2014	2014	-	Post | *Rear*	769092	**204550822**
Geopolis 300 Ie Geostyle	300	2011	2012	-	Post | *Rear*	769092	**204550822**
Geopolis 300 Ie Premium	300	2010	2013	-	Post | *Rear*	769092	**204550822**
Geopolis 300 Ie Rs Premium	300	2010	2013	-	Post | *Rear*	769092	**204550822**
PIAGGIO							
Liberty 4T	50	2000	2002	C2800	Post | *Rear*	56063R	**204550882**
Liberty 4T	50	2005	2008	C42400	Post | *Rear*	648088	**204550882**
Liberty 4T Rst	50	2004	2004	C42200	Post | *Rear*	56063R	**204550882**
Liberty 4T Sport	50	2006	2006	C42405	Post | *Rear*	600497	**204550882**
Liberty 4T Sport	50	2007	2008	C42405	Post | *Rear*	648088	**204550882**
Liberty Moc 4T & Elle	50	2009	2016	C49200	Post | *Rear*	648088	**204550882**
Liberty Ptt Eu2	50	2004	2005	C37401	Post | *Rear*	563701	**204550352**
Sfera Rst	50	1995	1997	C0100	Post | *Rear*	564110	**204550221**
Sfera Rst	50	1995	1997	C0100	Post | *Rear*	564110	**204550222**
Sfera Rst	50	1995	1997	C0100	Ant | *Front*	598922	**204584212**
Vespa Et2	50	1997	2005	C1600\38100	Ant | *Front*	598922	**204584212**
Vespa Et2 Iniezione	50	1997	2000	C1200	Post | *Rear*	600488	**204550081**
Vespa Et2 Iniezione	50	1997	2000	C1200	Post | *Rear*	600488	**204550082**
Vespa Et2 Iniezione	50	1997	2000	C1200	Ant | *Front*	598922	**204584212**
Vespa Et4	50	2000	2005	C26100	Post | *Rear*	600488	**204550081**
Vespa Et4	50	2000	2005	C26100	Post | *Rear*	600488	**204550082**
Vespa Et4	50	2000	2005	C26100	Ant | *Front*	598922	**204584212**
Vespa Lx 2T	50	2005	2013	C38101	Post | *Rear*	667967	**204550081**
Vespa Lx 2T	50	2005	2013	C38101	Post | *Rear*	667967	**204550082**
Vespa Lx 2T	50	2005	2013	C38101	Ant | *Front*	601997	**204584371**
Vespa Lx 2T	50	2005	2013	C38101	Ant | *Front*	601997	**204584372**
Vespa Lx 2T	50	2005	2013	C38101	Ant | *Front*	601997	**204584373**
Vespa Lx 2T Touring & 30Km/h	50	2010	2013	C38101	Post | *Rear*	667967	**204550081**
Vespa Lx 2T Touring & 30Km/h	50	2010	2013	C38101	Post | *Rear*	667967	**204550082**
Vespa Lx 2T Touring & 30Km/h	50	2010	2013	C38101	Ant | *Front*	601997	**204584371**
Vespa Lx 2T Touring & 30Km/h	50	2010	2013	C38101	Ant | *Front*	601997	**204584372**



AMMORTIZZATORI

SHOCK ABSORBERS

Modello *Model*	**CC**	**Da** *From*	**A** *To*	**Telaio** *Frame*	**Anteriore/Posteriore** *Front/Rear*	**OEM**	**Codice RMS** *RMS Code*
Vespa Lx 2T Touring & 30Km/h	50	2010	2013	C38101	Ant | *Front*	601997	**204584373**
Vespa Lx 4T	50	2005	2009	C38300	Post | *Rear*	600488	**204550081**
Vespa Lx 4T	50	2005	2009	C38300	Post | *Rear*	600488	**204550082**
Vespa Lx 4T	50	2005	2009	C38300	Ant | *Front*	56266R	**204584371**
Vespa Lx 4T	50	2005	2009	C38300	Ant | *Front*	56266R	**204584372**
Vespa Lx 4T	50	2005	2009	C38300	Ant | *Front*	56266R	**204584373**
Vespa Lx 4T-4V	50	2009	2013	C38700	Post | *Rear*	667967	**204550081**
Vespa Lx 4T-4V	50	2009	2013	C38700	Post | *Rear*	667967	**204550082**
Vespa Lx 4T-4V	50	2009	2013	C38700	Ant | *Front*	601997	**204584371**
Vespa Lx 4T-4V	50	2009	2013	C38700	Ant | *Front*	601997	**204584372**
Vespa Lx 4T-4V	50	2009	2013	C38700	Ant | *Front*	601997	**204584373**
Vespa Lx 4T-4V Touring	50	2010	2013	C38700	Post | *Rear*	667967	**204550081**
Vespa Lx 4T-4V Touring	50	2010	2013	C38700	Post | *Rear*	667967	**204550082**
Vespa Lx 4T-4V Touring	50	2010	2013	C38700	Ant | *Front*	601997	**204584371**
Vespa Lx 4T-4V Touring	50	2010	2013	C38700	Ant | *Front*	601997	**204584372**
Vespa Lx 4T-4V Touring	50	2010	2013	C38700	Ant | *Front*	601997	**204584373**
Vespa Lxv 2T	50	2006	2009	C38102	Post | *Rear*	667967	**204550081**
Vespa Lxv 2T	50	2006	2009	C38102	Post | *Rear*	667967	**204550082**
Vespa Lxv 2T Navy	50	2008	2008	C38102	Post | *Rear*	667967	**204550081**
Vespa Lxv 2T Navy	50	2008	2008	C38102	Post | *Rear*	667967	**204550082**
Vespa Primavera 2T	50	2013	2017	C53200	Post | *Rear*	668480	**204550932**
Vespa Primavera 2T	50	2013	2017	C53200	Ant | *Front*	1C000837R	**204585112**
Vespa Primavera 4T 2V 25 Km/h	50	2014	2017	C53300	Post | *Rear*	668480	**204550932**
Vespa Primavera 4T 2V 25 Km/h	50	2014	2017	C53300	Ant | *Front*	1C000837R	**204585112**
Vespa Primavera 4T 3V 25 Km/h E4	50	2017	2018	CA0200	Ant | *Front*	1C002588R	**204584422**
Vespa Primavera 4T-3V E4 (No ABS)	50	2017	2018	CA0100	Ant | *Front*	1C002588R	**204584422**
Vespa Primavera 4T-4V	50	2013	2017	C53100	Post | *Rear*	668480	**204550932**
Vespa Primavera 4T-4V	50	2013	2017	C53100	Ant | *Front*	1C000837R	**204585112**
Vespa Sprint 2T 2V	50	2014	2017	C53201	Post | *Rear*	668480	**204550932**
Vespa Sprint 4T 2V 25 Km/h	50	2014	2017	C53301	Post | *Rear*	668480	**204550932**
Vespa Sprint 4T 3V 25 Km/h E4	50	2017	2018	CA0201	Ant | *Front*	1C002588R	**204584422**
Vespa Sprint 4T 4V	50	2014	2017	C53101	Post | *Rear*	668480	**204550932**
Vespa Sprint 4T-3V E4	50	2017	2018	CA0101	Ant | *Front*	1C002588R	**204584422**
Zip	50	1992	1993	SSL1T	Post | *Rear*	2729604	**204550061**
Zip	50	1992	1993	SSL1T	Post | *Rear*	2729604	**204550062**
Zip	50	1995	1996	SSP2T	Post | *Rear*	2729604	**204550061**
Zip	50	1995	1996	SSP2T	Post | *Rear*	2729604	**204550062**
Zip Fast Raider	50	1993	1994	SSP1T	Post | *Rear*	2729604	**204550061**
Zip Fast Raider	50	1993	1994	SSP1T	Post | *Rear*	2729604	**204550062**
Zip Sp	50	2001	2004	C250004	Ant | *Front*	598922	**204584212**
Zip Sp Euro2	50	2006	2013	C25000	Ant | *Front*	598922	**204584212**
Beverly	125	2001	2003	M2810\M2820	Post | *Rear*	56138R	**204550362**
Beverly Euro 3	125	2007	2008	M28900	Post | *Rear*	601014	**204550682**
Beverly Euro 3	125	2007	2008	M28900	Post | *Rear*	601014	**204550683**
Beverly Euro 3 Mic	125	2007	2007	M28900	Post | *Rear*	56174R	**204550362**
Beverly Euro 3 Sport	125	2007	2008	M28900	Post | *Rear*	601014	**204550682**
Beverly Euro 3 Sport	125	2007	2008	M28900	Post | *Rear*	601014	**204550683**
Beverly Rst	125	2004	2005	M28400	Post | *Rear*	56138R	**204550362**
Beverly Rst	125	2005	2007	M28400	Post | *Rear*	601014	**204550682**
Beverly Rst	125	2005	2007	M28400	Post | *Rear*	601014	**204550683**
Beverly Rst 4T 4V Ie Euro3	125	2010	2015	ZAMP69100	Post | *Rear*	58518R	**204550662**
Beverly Rst 4T 4V Ie Euro3	125	2010	2015	ZAMP69100	Post | *Rear*	58518R	**204550663**
Beverly Tourer Euro3	125	2007	2010	M28901	Post | *Rear*	601014	**204550682**
Beverly Tourer Euro3	125	2007	2010	M28901	Post | *Rear*	601014	**204550683**
Carnaby	125	2007	2010	M60200	Post | *Rear*	649423	**204550672**
Liberty	125	1998	2000	M1100	Post | *Rear*	563701	**204550352**
Liberty	125	2001	2002	M2200	Post | *Rear*	56232R	**204550281**
Liberty	125	2001	2002	M2200	Post | *Rear*	56232R	**204550282**



Modello *Model*	CC	Da *From*	A *To*	Telaio *Frame*	Anteriore/Posteriore *Front/Rear*	OEM	Codice RMS *RMS Code*
Liberty 4T	125	2006	2007	M38100	Post | *Rear*	56232R	**204550281**
Liberty 4T	125	2006	2007	M38100	Post | *Rear*	56232R	**204550282**
Liberty 4T 2V Euro3	125	2009	2012	M67100	Post | *Rear*	56232R	**204550281**
Liberty 4T 2V Euro3	125	2009	2012	M67100	Post | *Rear*	56232R	**204550282**
Liberty 4T 2V Ie Ptt - Ita	125	2012	2013	M38900	Post | *Rear*	56232R	**204550281**
Liberty 4T 2V Ie Ptt - Ita	125	2012	2013	M38900	Post | *Rear*	56232R	**204550282**
Liberty 4T Euro3	125	2006	2008	M38600	Post | *Rear*	56232R	**204550281**
Liberty 4T Euro3	125	2006	2008	M38600	Post | *Rear*	56232R	**204550282**
Liberty 4T Euro3 Delivery - Single	125	2007	2015	M38602	Post | *Rear*	56232R	**204550281**
Liberty 4T Euro3 Delivery - Single	125	2007	2015	M38602	Post | *Rear*	56232R	**204550282**
Liberty 4T Euro3 Delivery - Tnt - Nexive	125	2008	2015	P38602	Post | *Rear*	56232R	**204550281**
Liberty 4T Euro3 Delivery - Tnt - Nexive	125	2008	2015	P38602	Post | *Rear*	56232R	**204550282**
Liberty 4T Sport Euro3	125	2006	2008	M38601	Post | *Rear*	56232R	**204550281**
Liberty 4T Sport Euro3	125	2006	2008	M38601	Post | *Rear*	56232R	**204550282**
Liberty Iget 4T 3V Ie	125	2015	2019	RP8M89100	Post | *Rear*	1C002257	**204551152**
Liberty Rst	125	2004	2005	M38100	Post | *Rear*	56134R	**204550281**
Liberty Rst	125	2004	2005	M38100	Post | *Rear*	56134R	**204550282**
Liberty Rst Ptt	125	2005	2011	M38103	Post | *Rear*	56232R	**204550281**
Liberty Rst Ptt	125	2005	2011	M38103	Post | *Rear*	56232R	**204550282**
Liberty Sport	125	2006	2006	M38104	Post | *Rear*	56232R	**204550281**
Liberty Sport	125	2006	2006	M38104	Post | *Rear*	56232R	**204550282**
Medley 4T Ie Abs	125	2016	2018	RP8MA0120	Post | *Rear*	1C000960	**204551052**
Sfera	125	1995	1997	M0100	Post | *Rear*	564110	**204550221**
Sfera	125	1995	1997	M0100	Post | *Rear*	564110	**204550222**
Sfera	125	1995	1997	M0100	Ant | *Front*	597316	**204584212**
Skipper 4T	125	2000	2002	M2100	Post | *Rear*	598929	**204550432**
Skipper 4T	125	2000	2002	M2100	Post | *Rear*	598929	**204550433**
Vespa Et4	125	1996	1998	M0400	Post | *Rear*	564110	**204550221**
Vespa Et4	125	1996	1998	M0400	Post | *Rear*	564110	**204550222**
Vespa Et4	125	1996	1998	M0400	Ant | *Front*	598922	**204584212**
Vespa Et4	125	1999	2002	M1900	Post | *Rear*	598929	**204550432**
Vespa Et4	125	1999	2002	M1900	Post | *Rear*	598929	**204550433**
Vespa Et4	125	1999	2002	M1900	Ant | *Front*	598922	**204584212**
Vespa Granturismo	125	2003	2005	M311\312	Post | *Rear*	56198R	**204550512**
Vespa Granturismo	125	2003	2005	M311\312	Post | *Rear*	56198R	**204550513**
Vespa Granturismo	125	2003	2005	M311\312	Ant | *Front*	56263R	**204584382**
Vespa Granturismo	125	2003	2005	M311\312	Ant | *Front*	56263R	**204584383**
Vespa Granturismo	125	2006	2007	M31101	Post | *Rear*	56234R	**204550512**
Vespa Granturismo	125	2006	2007	M31101	Post | *Rear*	56234R	**204550513**
Vespa Granturismo	125	2006	2007	M31101	Ant | *Front*	56263R	**204584382**
Vespa Granturismo	125	2006	2007	M31101	Ant | *Front*	56263R	**204584383**
Vespa Granturismo Euro 3	125	2006	2007	M31300	Post | *Rear*	58503R	**204550512**
Vespa Granturismo Euro 3	125	2006	2007	M31300	Post | *Rear*	58503R	**204550513**
Vespa Granturismo Euro 3	125	2006	2007	M31300	Ant | *Front*	56286R	**204584382**
Vespa Granturismo Euro 3	125	2006	2007	M31300	Ant | *Front*	56286R	**204584383**
Vespa Gts 4T Ie Super	125	2009	2016	M45300	Post | *Rear*	58503R	**204550512**
Vespa Gts 4T Ie Super	125	2009	2016	M45300	Post | *Rear*	58503R	**204550513**
Vespa Gts Euro3	125	2007	2012	M31300	Post | *Rear*	58503R	**204550512**
Vespa Gts Euro3	125	2007	2012	M31300	Post | *Rear*	58503R	**204550513**
Vespa Gts Euro3	125	2007	2012	M31300	Ant | *Front*	56286R	**204584382**
Vespa Gts Euro3	125	2007	2012	M31300	Ant | *Front*	56286R	**204584383**
Vespa Gtv	125	2006	2008	M31301	Post | *Rear*	58503R	**204550512**
Vespa Gtv	125	2006	2008	M31301	Post | *Rear*	58503R	**204550513**
Vespa Gtv	125	2006	2008	M31301	Ant | *Front*	56286R	**204584382**
Vespa Gtv	125	2006	2008	M31301	Ant | *Front*	56286R	**204584383**
Vespa Gtv 4T Navy Euro3	125	2008	2008	M31301	Post | *Rear*	58503R	**204550512**
Vespa Gtv 4T Navy Euro3	125	2008	2008	M31301	Post | *Rear*	58503R	**204550513**
Vespa Gtv 4T Navy Euro3	125	2008	2008	M31301	Ant | *Front*	56286R	**204584382**



AMMORTIZZATORI

SHOCK ABSORBERS

Modello *Model*	**CC**	**Da** *From*	**A** *To*	**Telaio** *Frame*	**Anteriore/Posteriore** *Front/Rear*	**OEM**	**Codice RMS** *RMS Code*
Vespa Gtv 4T Navy Euro3	125	2008	2008	M31301	Ant | *Front*	56286R	**204584383**
Vespa Lx	125	2005	2006	M44100	Post | *Rear*	56230R	**204550432**
Vespa Lx	125	2005	2006	M44100	Post | *Rear*	56230R	**204550433**
Vespa Lx	125	2005	2006	M44100	Ant | *Front*	601997	**204584371**
Vespa Lx	125	2005	2006	M44100	Ant | *Front*	601997	**204584372**
Vespa Lx	125	2005	2006	M44100	Ant | *Front*	601997	**204584373**
Vespa Lx 4T 3V Ie - Touring	125	2012	2013	-	Post | *Rear*	56230R	**204550433**
Vespa Lx 4T 3V Ie - Touring	125	2012	2013	-	Ant | *Front*	601997	**204584373**
Vespa Lx 4T Euro3 Touring	125	2010	2011	M68100	Post | *Rear*	56230R	**204550432**
Vespa Lx 4T Euro3 Touring	125	2010	2011	M68100	Post | *Rear*	56230R	**204550433**
Vespa Lx 4T Euro3 Touring	125	2010	2011	M68100	Ant | *Front*	601997	**204584371**
Vespa Lx 4T Euro3 Touring	125	2010	2011	M68100	Ant | *Front*	601997	**204584372**
Vespa Lx 4T Euro3 Touring	125	2010	2011	M68100	Ant | *Front*	601997	**204584373**
Vespa Lx 4T FI	125	2009	2009	M44100	Post | *Rear*	56230R	**204550432**
Vespa Lx 4T FI	125	2009	2009	M44100	Post | *Rear*	56230R	**204550433**
Vespa Lx 4T FI	125	2009	2009	M44100	Ant | *Front*	601997	**204584371**
Vespa Lx 4T FI	125	2009	2009	M44100	Ant | *Front*	601997	**204584372**
Vespa Lx 4T FI	125	2009	2009	M44100	Ant | *Front*	601997	**204584373**
Vespa Lx Euro 3	125	2006	2008	M44300	Post | *Rear*	56230R	**204550432**
Vespa Lx Euro 3	125	2006	2008	M44300	Post | *Rear*	56230R	**204550433**
Vespa Lx Euro 3	125	2006	2008	M44300	Ant | *Front*	601997	**204584371**
Vespa Lx Euro 3	125	2006	2008	M44300	Ant | *Front*	601997	**204584372**
Vespa Lx Euro 3	125	2006	2008	M44300	Ant | *Front*	601997	**204584373**
Vespa Lx Euro 3 Ie	125	2009	2011	M68100	Post | *Rear*	56230R	**204550432**
Vespa Lx Euro 3 Ie	125	2009	2011	M68100	Post | *Rear*	56230R	**204550433**
Vespa Lx Euro 3 Ie	125	2009	2011	M68100	Ant | *Front*	601997	**204584371**
Vespa Lx Euro 3 Ie	125	2009	2011	M68100	Ant | *Front*	601997	**204584372**
Vespa Lx Euro 3 Ie	125	2009	2011	M68100	Ant | *Front*	601997	**204584373**
Vespa Lx Primavera 4T 3V Ie	125	2013	2017	M81100	Post | *Rear*	1C000579R	**204551072**
Vespa Lx Primavera 4T 3V Ie	125	2013	2017	M81100	Ant | *Front*	669166	**204585112**
Vespa Lxv 4T Euro3	125	2006	2009	M44301	Post | *Rear*	56230R	**204550432**
Vespa Lxv 4T Euro3	125	2006	2009	M44301	Post | *Rear*	56230R	**204550433**
Vespa Lxv 4T Navy Euro3	125	2007	2008	M44301	Post | *Rear*	56230R	**204550432**
Vespa Lxv 4T Navy Euro3	125	2007	2008	M44301	Post | *Rear*	56230R	**204550433**
Vespa Lxv Ie 4T	125	2010	2013	P68102	Post | *Rear*	56230R	**204550432**
Vespa Lxv Ie 4T	125	2010	2013	P68102	Post | *Rear*	56230R	**204550433**
Vespa Primavera 4T 3V E4 Iget Abs	125	2016	2018	MA1100	Post | *Rear*	1C000579R	**204551072**
Vespa Primavera 4T 3V E4 Iget Abs	125	2016	2018	MA1100	Ant | *Front*	1C002588R	**204584422**
Vespa Sprint 4T 3V Ie	125	2014	2015	M81300\01	Post | *Rear*	1C000579R	**204551072**
Vespa Sprint Iget 4T 3V Abs (Emea)	125	2016	2018	MA1300	Post | *Rear*	1C000579R	**204551072**
X Evo	125	2007	2016	M36601\M36601	Post | *Rear*	56235R	**204550772**
X10 4T 4V Ie Euro3	125	2012	2013	M76101	Post | *Rear*	58607R	**204550792**
X7 Euro 3	125	2008	2008	M62100	Post | *Rear*	646552	**204550772**
X8	125	2004	2004	PM36200\PM36300	Post | *Rear*	599891	**204550772**
X8	125	2005	2006	M36301	Post | *Rear*	56235R	**204550772**
X8 Premium Euro 2	125	2006	2006	M36301	Post | *Rear*	56235R	**204550772**
X8 Premium Euro 3	125	2006	2007	M36600	Post | *Rear*	56235R	**204550772**
X9	125	2001	2002	M2300001	Post | *Rear*	564995	**204550782**
X9 Evolution	125	2003	2003	M2300035	Post | *Rear*	564995	**204550782**
X9 Evolution	125	2005	2006	M23000	Post | *Rear*	56231R	**204550782**
X9 Evolution Euro3	125	2007	2007	M48100	Post | *Rear*	56231R	**204550782**
Zip	125	2000	2002	M2500	Post | *Rear*	564881	**204550433**
Zip	125	2000	2002	M2500	Ant | *Front*	598922	**204584212**
Liberty 4T Euro3	150	2008	2008	M38700	Post | *Rear*	56232R	**204550281**
Liberty 4T Euro3	150	2008	2008	M38700	Post | *Rear*	56232R	**204550282**
Liberty 4T Sport Euro3	150	2008	2008	M38701	Post | *Rear*	56232R	**204550281**
Liberty 4T Sport Euro3	150	2008	2008	M38701	Post | *Rear*	56232R	**204550282**
Liberty Iget 4T 3V Ie	150	2015	2019	RP8M89200	Post | *Rear*	1C002257	**204551152**



Modello *Model*	CC	Da *From*	A *To*	Telaio *Frame*	Anteriore/Posteriore *Front/Rear*	OEM	Codice RMS *RMS Code*
Liberty Moc 4T Euro3	150	2009	2013	M67200	Post | *Rear*	56232R	**204550281**
Liberty Moc 4T Euro3	150	2009	2013	M67200	Post | *Rear*	56232R	**204550282**
Medley 4T Ie Abs	150	2016	2017	RP8MA0220	Post | *Rear*	1C000960	**204551052**
Vespa Gts Super Ie 4T 3V	150	2014	2015	RP8M4	Post | *Rear*	58503R	**204550512**
Vespa Gts Super Ie 4T 3V	150	2014	2015	RP8M4	Post | *Rear*	58503R	**204550513**
Vespa Lx	150	2005	2006	M44200	Post | *Rear*	56230R	**204550432**
Vespa Lx	150	2005	2006	M44200	Post | *Rear*	56230R	**204550433**
Vespa Lx	150	2005	2006	M44200	Ant | *Front*	601997	**204584371**
Vespa Lx	150	2005	2006	M44200	Ant | *Front*	601997	**204584372**
Vespa Lx	150	2005	2006	M44200	Ant | *Front*	601997	**204584373**
Vespa Lx 4T 3V Ie - Touring	150	2012	2013	M68400	Post | *Rear*	56230R	**204550432**
Vespa Lx 4T 3V Ie - Touring	150	2012	2013	M68400	Post | *Rear*	56230R	**204550433**
Vespa Lx 4T 3V Ie - Touring	150	2012	2013	M68400	Ant | *Front*	601997	**204584371**
Vespa Lx 4T 3V Ie - Touring	150	2012	2013	M68400	Ant | *Front*	601997	**204584372**
Vespa Lx 4T 3V Ie - Touring	150	2012	2013	M68400	Ant | *Front*	601997	**204584373**
Vespa Lx 4T FI	150	2009	2009	M44400	Post | *Rear*	56230R	**204550432**
Vespa Lx 4T FI	150	2009	2009	M44400	Post | *Rear*	56230R	**204550433**
Vespa Lx 4T FI	150	2009	2009	M44400	Ant | *Front*	601997	**204584371**
Vespa Lx 4T FI	150	2009	2009	M44400	Ant | *Front*	601997	**204584372**
Vespa Lx 4T FI	150	2009	2009	M44400	Ant | *Front*	601997	**204584373**
Vespa Lx Euro 3	150	2006	2008	M44400	Post | *Rear*	56230R	**204550432**
Vespa Lx Euro 3	150	2006	2008	M44400	Post | *Rear*	56230R	**204550433**
Vespa Lx Euro 3	150	2006	2008	M44400	Ant | *Front*	601997	**204584371**
Vespa Lx Euro 3	150	2006	2008	M44400	Ant | *Front*	601997	**204584372**
Vespa Lx Euro 3	150	2006	2008	M44400	Ant | *Front*	601997	**204584373**
Vespa Lx Euro 3 Ie	150	2009	2011	M68200	Post | *Rear*	56230R	**204550432**
Vespa Lx Euro 3 Ie	150	2009	2011	M68200	Post | *Rear*	56230R	**204550433**
Vespa Lx Euro 3 Ie	150	2009	2011	M68200	Ant | *Front*	601997	**204584371**
Vespa Lx Euro 3 Ie	150	2009	2011	M68200	Ant | *Front*	601997	**204584372**
Vespa Lx Euro 3 Ie	150	2009	2011	M68200	Ant | *Front*	601997	**204584373**
Vespa Lx Touring	150	2010	2012	M68200	Post | *Rear*	56230R	**204550432**
Vespa Lx Touring	150	2010	2012	M68200	Post | *Rear*	56230R	**204550433**
Vespa Lx Touring	150	2010	2012	M68200	Ant | *Front*	646959	**204584371**
Vespa Lx Touring	150	2010	2012	M68200	Ant | *Front*	646959	**204584372**
Vespa Lx Touring	150	2010	2012	M68200	Ant | *Front*	646959	**204584373**
Vespa Primavera 4T 3V Iget Abs (Emea)	150	2016	2018	MA1200	Post | *Rear*	1C000579R	**204551072**
Vespa Primavera 4T 3V Iget Abs (Emea)	150	2016	2018	MA1200	Ant | *Front*	1C002588R	**204584422**
Vespa Primavera 4T-3V	150	2013	2016	M81200	Post | *Rear*	1C000579R	**204551072**
Vespa Primavera 4T-3V	150	2013	2016	M81200	Ant | *Front*	1C000837R	**204585112**
Vespa Sprint 4T 3V Ie	150	2015	2015		Post | *Rear*	1C000579R	**204551072**
Vespa Sprint Sport 4T 3V Iget Abs	150	2016	2018	MA1400	Post | *Rear*	1C000579R	**204551072**
X9 Amalfi	180	2000	2003	M2300002	Post | *Rear*	564995	**204550782**
Carnaby	200	2007	2008	M60100	Post | *Rear*	649423	**204550672**
Liberty	200	2006	2006	M38400	Post | *Rear*	56232R	**204550281**
Liberty	200	2006	2006	M38400	Post | *Rear*	56232R	**204550282**
Liberty 4T Euro3	200	2006	2008	M38500	Post | *Rear*	56232R	**204550281**
Liberty 4T Euro3	200	2006	2008	M38500	Post | *Rear*	56232R	**204550282**
Liberty 4T Sport Euro3	200	2006	2007	M38501	Post | *Rear*	56232R	**204550281**
Liberty 4T Sport Euro3	200	2006	2007	M38501	Post | *Rear*	56232R	**204550282**
Liberty Rst	200	2004	2004	M3840001	Post | *Rear*	56134R	**204550281**
Liberty Rst	200	2004	2004	M3840001	Post | *Rear*	56134R	**204550282**
Liberty Sport	200	2006	2006	M38401	Post | *Rear*	56232R	**204550281**
Liberty Sport	200	2006	2006	M38401	Post | *Rear*	56232R	**204550282**
Vespa Granturismo	200	2006	2007	M31200	Post | *Rear*	56234R	**204550512**
Vespa Granturismo	200	2006	2007	M31200	Post | *Rear*	56234R	**204550513**
Vespa Granturismo	200	2006	2007	M31200	Ant | *Front*	56286R	**204584382**
Vespa Granturismo	200	2006	2007	M31200	Ant | *Front*	56286R	**204584383**
X8	200	2005	2007	M36200	Post | *Rear*	56235R	**204550772**



AMMORTIZZATORI

SHOCK ABSORBERS

Modello *Model*	**CC**	**Da** *From*	**A** *To*	**Telaio** *Frame*	**Anteriore/Posteriore** *Front/Rear*	**OEM**	**Codice RMS** *RMS Code*
X9	200	2002	2003	M2300003	Post | *Rear*	564995	**204550782**
X9 Evolution	200	2003	2003	M2300003	Post | *Rear*	564995	**204550782**
Beverly	250	2006	2007	M28500	Post | *Rear*	601014	**204550682**
Beverly	250	2006	2007	M28500	Post | *Rear*	601014	**204550683**
Beverly Cruiser	250	2007	2009	M28802	Post | *Rear*	56174R	**204550362**
Beverly Euro 3 Mic	250	2007	2007	M28800	Post | *Rear*	56174R	**204550362**
Beverly Ie Euro 3	250	2006	2008	M28800	Post | *Rear*	56174R	**204550362**
Beverly Rst	250	2004	2005	M28500	Post | *Rear*	56138R	**204550362**
Beverly Sport	250	2006	2008	M28800	Post | *Rear*	56174R	**204550362**
Beverly Tourer Euro3	250	2007	2009	M28801	Post | *Rear*	56174R	**204550362**
Carnaby	250	2008	2008	M60300	Post | *Rear*	649423	**204550672**
Vespa Gt 60 Euro 3	250	2006	2007	M45102	Post | *Rear*	58503R	**204550512**
Vespa Gt 60 Euro 3	250	2006	2007	M45102	Post | *Rear*	58503R	**204550513**
Vespa Gt 60 Euro 3	250	2006	2007	M45102	Ant | *Front*	56286R	**204584382**
Vespa Gt 60 Euro 3	250	2006	2007	M45102	Ant | *Front*	56286R	**204584383**
Vespa Gts	250	2005	2016	M45100	Post | *Rear*	58503R	**204550512**
Vespa Gts	250	2005	2016	M45100	Post | *Rear*	58503R	**204550513**
Vespa Gts	250	2005	2016	M45100	Ant | *Front*	56286R	**204584382**
Vespa Gts	250	2005	2016	M45100	Ant | *Front*	56286R	**204584383**
Vespa Gts Abs	250	2005	2012	45101	Post | *Rear*	56234R	**204550512**
Vespa Gts Abs	250	2005	2012	45101	Post | *Rear*	56234R	**204550513**
Vespa Gts Abs	250	2005	2012	45101	Ant | *Front*	56286R	**204584382**
Vespa Gts Abs	250	2005	2012	45101	Ant | *Front*	56286R	**204584383**
Vespa Gtv	250	2006	2009	M45102	Post | *Rear*	58503R	**204550512**
Vespa Gtv	250	2006	2009	M45102	Post | *Rear*	58503R	**204550513**
Vespa Gtv	250	2006	2009	M45102	Ant | *Front*	56286R	**204584382**
Vespa Gtv	250	2006	2009	M45102	Ant | *Front*	56286R	**204584383**
Vespa Gtv 4T Navy Euro3	250	2007	2007	M45102	Post | *Rear*	58503R	**204550512**
Vespa Gtv 4T Navy Euro3	250	2007	2007	M45102	Post | *Rear*	58503R	**204550513**
Vespa Gtv 4T Navy Euro3	250	2007	2007	M45102	Ant | *Front*	56286R	**204584382**
Vespa Gtv 4T Navy Euro3	250	2007	2007	M45102	Ant | *Front*	56286R	**204584383**
X Evo	250	2007	2016	M36401\M36401	Post | *Rear*	56235R	**204550772**
X7 Euro 3	250	2008	2008	M62200	Post | *Rear*	646552	**204550772**
X8 Euro3	250	2005	2008	M36400	Post | *Rear*	56235R	**204550772**
X9	250	2000	2001	M23000	Post | *Rear*	564505	**204550922**
X9 Evolution	250	2004	2004	M23000000	Post | *Rear*	564995	**204550782**
X9 Evolution	250	2006	2006	M23000	Post | *Rear*	56231R	**204550782**
Beverly Ie Abs E4	300	2016	2016	A2100	Post | *Rear*	58518R	**204550662**
Beverly Ie Abs E4	300	2016	2016	A2100	Post | *Rear*	58518R	**204550663**
Beverly Rst 4T 4V Ie Euro3	300	2010	2015	ZAMP69200	Post | *Rear*	58518R	**204550662**
Beverly Rst 4T 4V Ie Euro3	300	2010	2015	ZAMP69200	Post | *Rear*	58518R	**204550663**
Beverly Tourer Euro3	300	2009	2010	M28A00	Post | *Rear*	56174R	**204550362**
Carnaby Cruiser	300	2009	2012	M60400	Post | *Rear*	649423	**204550672**
Vespa Gts Ie & Touring	300	2012	2016	M45200	Post | *Rear*	58503R	**204550512**
Vespa Gts Ie & Touring	300	2012	2016	M45200	Post | *Rear*	58503R	**204550513**
Vespa Gts Ie & Touring	300	2012	2016	M45200	Ant | *Front*	56286R	**204584382**
Vespa Gts Ie & Touring	300	2012	2016	M45200	Ant | *Front*	56286R	**204584383**
Vespa Gts Ie Abs E4	300	2016	2016	MA3300	Post | *Rear*	58503R5	**204550512**
Vespa Gts Ie Abs E4	300	2016	2016	MA3300	Post | *Rear*	58503R5	**204550513**
Vespa Gts Ie Abs E4	300	2016	2016	MA3300	Ant | *Front*	56286R	**204584382**
Vespa Gts Ie Abs E4	300	2016	2016	MA3300	Ant | *Front*	56286R	**204584383**
Vespa Gts Ie Touring	300	2011	2012	M45200	Post | *Rear*	58503R	**204550512**
Vespa Gts Ie Touring	300	2011	2012	M45200	Post | *Rear*	58503R	**204550513**
Vespa Gts Ie Touring	300	2011	2012	M45200	Ant | *Front*	56286R	**204584382**
Vespa Gts Ie Touring	300	2011	2012	M45200	Ant | *Front*	56286R	**204584383**
Vespa Gts Super	300	2008	2016	M45200	Post | *Rear*	58503R	**204550512**
Vespa Gts Super	300	2008	2016	M45200	Post | *Rear*	58503R	**204550513**
Vespa Gts Super Sport	300	2010	2013	M45200	Post | *Rear*	58503R	**204550512**



Modello *Model*	CC	Da *From*	A *To*	Telaio *Frame*	Anteriore/Posteriore *Front/Rear*	OEM	Codice RMS *RMS Code*
Vespa Gts Super Sport	300	2010	2013	M45200	Post | *Rear*	58503R	**204550513**
Vespa Gtv 4T 4V Ie	300	2010	2013	M4520	Post | *Rear*	58503R	**204550512**
Vespa Gtv 4T 4V Ie	300	2010	2013	M4520	Post | *Rear*	58503R	**204550513**
Vespa Gtv 4T 4V Ie	300	2010	2013	M4520	Ant | *Front*	56286R	**204584382**
Vespa Gtv 4T 4V Ie	300	2010	2013	M4520	Ant | *Front*	56286R	**204584383**
Vespa Gtv Via Montenapoleone	300	2010	2010	M45201	Post | *Rear*	58503R	**204550512**
Vespa Gtv Via Montenapoleone	300	2010	2010	M45201	Post | *Rear*	58503R	**204550513**
Vespa Gtv Via Montenapoleone	300	2010	2010	M45201	Ant | *Front*	56286R	**204584382**
Vespa Gtv Via Montenapoleone	300	2010	2010	M45201	Ant | *Front*	56286R	**204584383**
Beverly 4T 4V Ie Euro3 Sport Touring	350	2011	2014	M6930	Post | *Rear*	58583R	**204550632**
Beverly 4T St Ie Abs	350	2016	2016	-	Post | *Rear*	58613R	**204550632**
X10 4T 4V Ie Euro3	350	2012	2015	M76201\M76200	Post | *Rear*	58607R	**204550792**
Beverly Euro 3	400	2006	2007	M34300	Post | *Rear*	56210R	**204550651**
Beverly Euro 3	400	2006	2007	M34300	Post | *Rear*	56210R	**204550652**
Beverly Euro 3	400	2006	2007	M34300	Post | *Rear*	56210R	**204550653**
Beverly Tourer Euro3	400	2008	2010	M34400	Post | *Rear*	56210R	**204550651**
Beverly Tourer Euro3	400	2008	2010	M34400	Post | *Rear*	56210R	**204550652**
Beverly Tourer Euro3	400	2008	2010	M34400	Post | *Rear*	56210R	**204550653**
Beverly	500	2002	2004	M34100	Post | *Rear*	56210R	**204550653**
Beverly	500	2002	2006	M34100	Post | *Rear*	56210R	**204550651**
Beverly	500	2002	2006	M34100	Post | *Rear*	56210R	**204550652**
Beverly	500	2005	2006	M34100	Post | *Rear*	56210R	**204550653**
Beverly Cruiser	500	2007	2012	M34500	Post | *Rear*	56210R	**204550651**
Beverly Cruiser	500	2007	2012	M34500	Post | *Rear*	56210R	**204550652**
Beverly Cruiser	500	2007	2012	M34500	Post | *Rear*	56210R	**204550653**
Beverly Euro 3	500	2006	2008	M34200	Post | *Rear*	56210R	**204550651**
Beverly Euro 3	500	2006	2008	M34200	Post | *Rear*	56210R	**204550652**
Beverly Euro 3	500	2006	2008	M34200	Post | *Rear*	56210R	**204550653**
SACHS							
Reggae 50	50	1996	1997	427	Post | *Rear*	-	**204550191**
Reggae 50	50	1996	1997	427	Post | *Rear*	-	**204550192**
Reggae 50 Rs	50	1996	1997	427	Post | *Rear*	-	**204550191**
Reggae 50 Rs	50	1996	1997	427	Post | *Rear*	-	**204550192**
Splinter 50	50	1996	1997	427	Post | *Rear*	-	**204550191**
Splinter 50	50	1996	1997	427	Post | *Rear*	-	**204550192**
SUZUKI							
Aj Zz Sepia S	50	1995	1997	CA1HC	Post | *Rear*	62100-39C00-17U	**204550092**
Uh125 Burgman K7-L0	125	2007	2010	CC111\CC112	Post | *Rear*	62100-03H01-000	**204550622**
Uh125 Burgman L1	125	2011	2012	CC111\CC112	Post | *Rear*	62100-03H01-000	**204550622**
Uh125 Burgman L3	125	2013	2013	CC111\CC112	Post | *Rear*	62100-03H01-000	**204550622**
Uh125 Burgman L4	125	2014	2014	C8111\C8112	Post | *Rear*	62100-03H01-000	**204550622**
Uh125 Burgman L6	125	2016	2016	C8111\C8112	Post | *Rear*	62100-12J10-000	**204551042**
Uh125A Burgman L7	125	2017	2017	C8132	Post | *Rear*	62100-12J10-000	**204551042**
Uh125A Burgman L8	125	2018	2018	C8132	Post | *Rear*	62100-12J10-000	**204551042**
Uh125A Burgman L9	125	2019	2019	C8132	Post | *Rear*	62100-12J10-000	**204551042**
Ux Sixteen K8-L0	125	2008	2010	CN111	Post | *Rear*	62100-20H01-000	**204550612**
Ux Sixteen L1	125	2011	2011	CN111	Post | *Rear*	62100-20H01-000	**204550612**
Ux Sixteen K8-L0	150	2008	2010	CP111	Post | *Rear*	62100-20H01-000	**204550612**
Ux Sixteen L1	150	2011	2011	CP111	Post | *Rear*	62100-20H01-000	**204550612**
Uh200 Burgman K7-L0	200	2007	2010	CD111\CD112	Post | *Rear*	62100-03H01-000	**204550622**
Uh200 Burgman L1	200	2011	2012	CD111\CD112	Post | *Rear*	62100-03H01-000	**204550622**
Uh200 Burgman L3	200	2013	2013	CD111\CD112	Post | *Rear*	62100-03H01-000	**204550622**
Uh200 Burgman L4	200	2014	2014	C9111\C9112	Post | *Rear*	62100-03H01-000	**204550622**
Uh200 Burgman L6	200	2016	2016	C9111\C9112	Post | *Rear*	62100-12J10-000	**204551042**
Uh200(A) Burgman L5	200	2015	2015	C9111\C9112	Post | *Rear*	62100-12J10-000	**204551042**
Uh200A Burgman L7	200	2017	2017	C9132	Post | *Rear*	62100-12J10-000	**204551042**
Uh200A Burgman L8	200	2018	2018	C9132	Post | *Rear*	62100-12J10-000	**204551042**
Uh200A Burgman L9	200	2019	2019	C9132	Post | *Rear*	62100-12J10-000	**204551042**



AMMORTIZZATORI

SHOCK ABSORBERS

Modello *Model*	CC	Da *From*	A *To*	Telaio *Frame*	Anteriore/Posteriore *Front/Rear*	OEM	Codice RMS *RMS Code*
SYM							
Symphony S	50	2010	2010	AY05W2-T	Post | *Rear*	52400APA010	**204550951**
Symphony S	50	2011	2011	AY05W4-T	Post | *Rear*	52400APA010	**204550951**
Symphony S	50	2012	2014	AY05W6-T	Post | *Rear*	52400APA010	**204550951**
Symphony Sr	50	2010	2010	AZ05W1-T	Post | *Rear*	52400APA010	**204550951**
Symphony Sr	50	2011	2011	AZ05W4-T	Post | *Rear*	52400APA010	**204550951**
Hd Eu2	125	2003	2004	LH12W-6	Post | *Rear*	52400H9B800	**204550961**
Hd Euro3	125	2007	2008	LH12W8-6	Post | *Rear*	52400H9B800	**204550961**
Hd Evo	125	2005	2006	LH12W5-6	Post | *Rear*	52400H9B800	**204550961**
Hd Evo Euro3	125	2007	2008	LH12WB-6	Post | *Rear*	52400H9B800	**204550961**
Hd Evo Euro3	125	2010	2011	LH12WB-6	Post | *Rear*	52400H9B800	**204550961**
Hd Evo Tamburo Euro3	125	2008	2009	LH12WA-6	Post | *Rear*	52400H9B800	**204550961**
Joyride Evo	125	2009	2010	LF12W-6	Post | *Rear*	52400LVA000KB	**204551011**
Joyride Evo	125	2010	2010	LF12W1-T	Post | *Rear*	52400LVA000KB	**204551011**
Joyride Evo	125	2013	2014	LF12W1-T	Post | *Rear*	52400LVA000KB	**204551011**
Symphony S	125	2010	2010	AY12W4-T	Post | *Rear*	52400ARB010	**204550941**
Symphony S	125	2012	2014	AY12W7-T	Post | *Rear*	52400ARB010	**204550941**
Symphony S Euro4	125	2016	2016	AY12W8-EU	Post | *Rear*	52400AR1000K	**204551021**
Symphony Sr	125	2010	2010	AZ12W1-T	Post | *Rear*	52400ARB010	**204550941**
Symphony St Euro4	125	2016	2016	XB12W2-EU	Post | *Rear*	52400AR1000K	**204551021**
Symphony S	150	2010	2010	AY15W3-T	Post | *Rear*	52400ARB010	**204550941**
Symphony S	150	2012	2014	AY15W6-T	Post | *Rear*	52400ARB010	**204550941**
Symphony Sr	150	2010	2010	AZ15W1-T	Post | *Rear*	52400ARB010	**204550941**
Symphony Sr	150	2012	2014	AZ15W6-T	Post | *Rear*	52400ARB010	**204550941**
Hd Eu2	200	2003	2004	LH18W-6	Post | *Rear*	52400H9B800	**204550961**
Hd Euro3 I	200	2007	2007	LH18W8-6	Post | *Rear*	52400H9B800	**204550961**
Hd Evo Euro2	200	2005	2006	LH18W5-6	Post | *Rear*	52400H9B800	**204550961**
Hd Evo Euro3 I	200	2007	2007	LH18W7-6	Post | *Rear*	52400H9B800	**204550961**
Hd Evo I Euro3	200	2010	2012	LH18W7-6	Post | *Rear*	52400H9B800	**204550961**
Hd Evo I Tamburo Euro3	200	2008	2009	LH182WA-6	Post | *Rear*	52400H9B800	**204550961**
Joyride Evo I	200	2009	2009	LF18W-6	Post | *Rear*	52400LVA000KB	**204551011**
Joyride Evo I	200	2013	2014	LF18W1-T	Post | *Rear*	52400LVA000KB	**204551011**
Joyride I Evo	200	2010	2010	LF18W1-T	Post | *Rear*	52400LVA000KB	**204551011**
Joyride S 200I Euro4	200	2017	2017	LF18W2-EU	Post | *Rear*	52400LVA000KB	**204551011**
Symphony St	200	2015	2015	XB12W1-EU	Post | *Rear*	52400AR1000K	**204551021**
Symphony St	200	2015	2015	XB20W1-EU	Post | *Rear*	52400AR1000K	**204551021**
Citycom	300	2008	2009	LH30W-6	Post | *Rear*	52400LEA000KB	**204550971**
Citycom Efi	300	2010	2011	LH30W-6	Post | *Rear*	52400LEA000KB	**204550971**
Citycom I Cbs	300	2012	2012	LH30W-6	Post | *Rear*	52400LEA000KB	**204550971**
Citycom I S Euro4	300	2017	2017	LL30W2-EU	Post | *Rear*	52400LEA000KB	**204550971**
Citycom S 300 I Cbs	300	2015	2015	LL30W1-EU	Post | *Rear*	52400LEA000KB	**204550971**
Joymax I	300	2012	2012	LN30W1-T	Post | *Rear*	52400L3A000KB	**204550981**
Joymax I	300	2014	2014	LN30W2-IT	Post | *Rear*	52400L3A000KB	**204550981**
Joymax I Abs	300	2013	2013	LN30W6-IT	Post | *Rear*	52400L3A000KB	**204550981**
Joymax I Abs	300	2014	2014	LN30W8-IT	Post | *Rear*	52400L3A000KB	**204550981**
Joymax I Sport Abs-S&S Euro4	300	2017	2017	LN30WA-EU	Post | *Rear*	52400L3A100KB	**204550981**
Maxsym I	400	2011	2011	LX40A1-6	Post | *Rear*	52400L4A000KB	**204551001**
Maxsym I	400	2012	2012	LX40A3-6	Post | *Rear*	52400L4A000KB	**204551001**
Maxsym I Abs	400	2012	2012	LX40A2-6	Post | *Rear*	52400L4A000KB	**204551001**
YAMAHA							
Bw'S Original	50	1997	1998	3WW\4VV	Post | *Rear*	4VUF22100000	**204550161**
Bw'S Original	50	1997	1998	3WW\4VV	Post | *Rear*	4VUF22100000	**204550162**
Bw'S Original	50	1999	2002	SA061	Post | *Rear*	4VUF22100000	**204550161**
Bw'S Original	50	1999	2002	SA061	Post | *Rear*	4VUF22100000	**204550162**
Bw'S Original Euro2	50	2003	2003	SA064	Post | *Rear*	4VUF22100000	**204550161**
Bw'S Original Euro2	50	2003	2003	SA064	Post | *Rear*	4VUF22100000	**204550162**
Cw Bw'S Original Euro2	50	2002	2002	SA064	Post | *Rear*	4VUF22100000	**204550161**
Cw Bw'S Original Euro2	50	2002	2002	SA064	Post | *Rear*	4VUF22100000	**204550162**



Modello *Model*	CC	Da *From*	A *To*	Telaio *Frame*	Anteriore/Posteriore *Front/Rear*	OEM	Codice RMS *RMS Code*
Ns50N Aerox Naked	50	2013	2016	SA424	Post | *Rear*	5BSF2210A000	**204550902**
Yn Neo'S	50	2004	2006	SA211	Post | *Rear*	5KKF22100033	**204550181**
Yn Neo'S	50	2004	2006	SA211	Post | *Rear*	5KKF22100033	**204550182**
Yn Neo'S Euro2	50	2002	2003	SA211	Post | *Rear*	5KKF22100033	**204550181**
Yn Neo'S Euro2	50	2002	2003	SA211	Post | *Rear*	5KKF22100033	**204550182**
Yn R Neo'S	50	1997	2002	5AD\SA151	Post | *Rear*	5KKF22100033	**204550181**
Yn R Neo'S	50	1997	2002	5AD\SA151	Post | *Rear*	5KKF22100033	**204550182**
Yq Aerox	50	2006	2012	SA144	Post | *Rear*	5BSF2210A000	**204550902**
Yn Neo'S	100	1999	2002	SB041	Post | *Rear*	5KKF22100033	**204550181**
Yn Neo'S	100	1999	2002	SB041	Post | *Rear*	5KKF22100033	**204550182**
Gpd125A N-Max	125	2015	2015	SE931	Post | *Rear*	2DPF22100000	**204551032**
Gpd125-A N-Max	125	2017	2017	SEC71	Post | *Rear*	2DPF22100000	**204551032**
Gpd125-A N-Max	125	2018	2018	-	Post | *Rear*	2DPF22100000	**204551032**
Yp125 Majesty	125	1998	2000	SE021	Post | *Rear*	5DSF22100000	**204550302**
Yp125 Majesty	125	2001	2002	SE061	Post | *Rear*	5DSF22100000	**204550302**
Yp125E Majesty	125	2003	2006	SE066	Post | *Rear*	5DSF22100000	**204550302**
Yp125R X-Max	125	2006	2009	SE321	Post | *Rear*	1B9F22100200	**204550482**
Yp125R X-Max	125	2010	2012	SE541	Post | *Rear*	37PF22100000	**204550502**
Yp125R X-Max	125	2010	2012	SE541	Post | *Rear*	37PF22100000	**204550503**
Yp125R X-Max	125	2012	2013	SG252	Post | *Rear*	37PF22100000	**204550502**
Yp125R X-Max	125	2012	2013	SG252	Post | *Rear*	37PF22100000	**204550503**
Yp125R X-Max	125	2014	2016	SE681\SE686	Post | *Rear*	2DMF22100000	**204551112**
Yp125R X-Max Abs	125	2011	2011	SE544	Post | *Rear*	37PF22100000	**204550502**
Yp125R X-Max Abs	125	2011	2011	SE544	Post | *Rear*	37PF22100000	**204550503**
Yp125Ra X-Max Abs	125	2013	2013	SE644	Post | *Rear*	37PF22100000	**204550502**
Yp125Ra X-Max Abs	125	2013	2013	SE644	Post | *Rear*	37PF22100000	**204550503**
Yp125Ra X-Max Abs	125	2014	2016	SE684	Post | *Rear*	2DMF22100000	**204551112**
Yp125Ra X-Max Abs	125	2017	2017	SEC31	Post | *Rear*	2DMF22100000	**204551112**
Gpd150-A N-Max	150	2017	2017	SG431	Post | *Rear*	2DPF22100000	**204551032**
Gpd150-A N-Max	150	2018	2018	-	Post | *Rear*	2DPF22100000	**204551032**
Yp150 Majesty	150	2000	2000	SG051	Post | *Rear*	5DSF22100033	**204550302**
Yp150 Majesty	150	2001	2002	SG081	Post | *Rear*	5DSF22100000	**204550302**
Yp180E Majesty	180	2003	2006	SG121	Post | *Rear*	5DSF22100000	**204550302**
Vp X-City	250	2007	2007	SG191	Post | *Rear*	5B2F22101000	**204550802**
Vp X-City	250	2009	2015	SG192\SG194	Post | *Rear*	5B2F22102000	**204550492**
Vp X-City	250	2009	2015	SG192\SG194	Post | *Rear*	5B2F22102000	**204550493**
Yp250 Majesty	250	2000	2001	SG041	Post | *Rear*	5GM222100000	**204550331**
Yp250 Majesty	250	2000	2001	SG041	Post | *Rear*	5GM222100000	**204550332**
Yp250 Majesty	250	2002	2003	SG048	Post | *Rear*	5GM222100000	**204550331**
Yp250 Majesty	250	2002	2003	SG048	Post | *Rear*	5GM222100000	**204550332**
Yp250 Majesty Abs	250	2003	2003	SG04B	Post | *Rear*	5GM222100000	**204550331**
Yp250 Majesty Abs	250	2003	2003	SG04B	Post | *Rear*	5GM222100000	**204550332**
Yp250R Black X-Max	250	2009	2009	SG162	Post | *Rear*	1B9F22100200	**204550482**
Yp250R X-Max	250	2005	2006	SG161	Post | *Rear*	1B9F22100200	**204550482**
Yp250R X-Max	250	2007	2009	SG162	Post | *Rear*	1B9F22100200	**204550482**
Yp250R X-Max	250	2010	2012	SG221	Post | *Rear*	37PF22100000	**204550502**
Yp250R X-Max	250	2010	2012	SG221	Post | *Rear*	37PF22100000	**204550503**
Yp250R X-Max	250	2012	2013	SG251	Post | *Rear*	37PF22100000	**204550502**
Yp250R X-Max	250	2012	2013	SG251	Post | *Rear*	37PF22100000	**204550503**
Yp250R X-Max	250	2014	2016	SG261	Post | *Rear*	2DMF22100000	**204551112**
Yp250R X-Max Sport	250	2011	2012	SG224	Post | *Rear*	37PF22100000	**204550502**
Yp250R X-Max Sport	250	2011	2012	SG224	Post | *Rear*	37PF22100000	**204550503**
Yp250Ra X-Max Abs	250	2011	2012	SG222	Post | *Rear*	37PF22100000	**204550502**
Yp250Ra X-Max Abs	250	2011	2012	SG222	Post | *Rear*	37PF22100000	**204550503**
Yp250Ra X-Max Abs	250	2012	2013	SG252	Post | *Rear*	37PF22100000	**204550502**
Yp250Ra X-Max Abs	250	2012	2013	SG252	Post | *Rear*	37PF22100000	**204550503**
Yp250Ra X-Max Abs	250	2014	2016	SG262	Post | *Rear*	2DMF22100000	**204551112**
Czd300-A X-Max	300	2017	2017	SH081	Post | *Rear*	B74F22100000	**204551132**



Modello *Model*	**CC**	**Da** *From*	**A** *To*	**Telaio** *Frame*	**Anteriore/Posteriore** *Front/Rear*	**OEM**	**Codice RMS** *RMS Code*
Czd300-A X-Max	300	2018	2018	SH131	Post | *Rear*	B74F22100000	**204551132**
Czd300-A X-Max Abs	300	2019	2019	SH131	Post | *Rear*	B74F22100000	**204551132**
Czd300-A X-Max Abs Iron Max	300	2019	2019	SH134	Post | *Rear*	B74F22100000	**204551132**
Yp400 Majesty	400	2004	2006	SH021\4\SH025\6	Post | *Rear*	5RU222101000	**204550342**
Yp400 Majesty	400	2007	2008	SH051\SH052	Post | *Rear*	5RU222103000	**204550343**
Yp400 Majesty	400	2009	2011	SH055\SH056\SH057	Post | *Rear*	5RU222103000	**204550343**
Yp400 Majesty Abs	400	2007	2008	SH054	Post | *Rear*	5RU222103000	**204550343**
Yp400 Majesty Abs	400	2009	2011	SH056\SH059	Post | *Rear*	5RU222103000	**204550343**
Yp400R X-Max	400	2013	2014	SH071	Post | *Rear*	1SDF22100000	**204551122**
Yp400R X-Max	400	2015	2016	SH071	Post | *Rear*	1SDF22101000	**204550912**
Yp400R X-Max Momodesign	400	2014	2014	SH071	Post | *Rear*	1SDF22100000	**204551122**
Yp400Ra X-Max Abs	400	2014	2014	SH072	Post | *Rear*	1SDF22100000	**204551122**
Yp400Ra X-Max Abs	400	2015	2017	SH072	Post | *Rear*	1SDF22101000	**204550912**
Yp400Ra X-Max Ironmax Abs	400	2016	2016	SH072	Post | *Rear*	1SDF22101000	**204550912**
Yp400Ra X-Max Momodesign Abs	400	2014	2014	SH076	Post | *Rear*	1SDF22100000	**204551122**



204550031



LUNGHEZZA *LENGHT*	ATTACCO SUPERIORE *UPPER FASTENING POINT*			ATTACCO INFERIORE *LOWER FASTENING POINT*		
(mm)	TIPO - *TYPE*	D (mm)	W (mm)	TIPO - *TYPE*	D (mm)	W (mm)
290		10,1	20		M8x1,25	20

204550032



LUNGHEZZA *LENGHT*	ATTACCO SUPERIORE *UPPER FASTENING POINT*			ATTACCO INFERIORE *LOWER FASTENING POINT*		
(mm)	TIPO - *TYPE*	D (mm)	W (mm)	TIPO - *TYPE*	D (mm)	W (mm)
290		10,1	20		M8x1,25	20

204550041



LUNGHEZZA *LENGHT*	ATTACCO SUPERIORE *UPPER FASTENING POINT*			ATTACCO INFERIORE *LOWER FASTENING POINT*		
(mm)	TIPO - *TYPE*	D (mm)	W (mm)	TIPO - *TYPE*	D (mm)	W (mm)
290		10,2	20		M8x1,25	20

204550042



LUNGHEZZA *LENGHT*	ATTACCO SUPERIORE *UPPER FASTENING POINT*			ATTACCO INFERIORE *LOWER FASTENING POINT*		
(mm)	TIPO - *TYPE*	D (mm)	W (mm)	TIPO - *TYPE*	D (mm)	W (mm)
290		10,2	20		M8x1,25	20

204550052



LUNGHEZZA *LENGHT*	ATTACCO SUPERIORE *UPPER FASTENING POINT*			ATTACCO INFERIORE *LOWER FASTENING POINT*		
(mm)	TIPO - *TYPE*	D (mm)	W (mm)	TIPO - *TYPE*	D (mm)	W (mm)
290		10,1	20		M8x1,25	20



AMMORTIZZATORI

SHOCK ABSORBERS

204550061



LUNGHEZZA *LENGHT*	ATTACCO SUPERIORE *UPPER FASTENING POINT*			ATTACCO INFERIORE *LOWER FASTENING POINT*		
(mm)	TIPO - *TYPE*	D (mm)	W (mm)	TIPO - *TYPE*	D (mm)	W (mm)
340		M8x1,25	-		10,1	33

204550062



LUNGHEZZA *LENGHT*	ATTACCO SUPERIORE *UPPER FASTENING POINT*			ATTACCO INFERIORE *LOWER FASTENING POINT*		
(mm)	TIPO - *TYPE*	D (mm)	W (mm)	TIPO - *TYPE*	D (mm)	W (mm)
340		M8x1,25	-		10,1	33

204550081



LUNGHEZZA *LENGHT*	ATTACCO SUPERIORE *UPPER FASTENING POINT*			ATTACCO INFERIORE *LOWER FASTENING POINT*		
(mm)	TIPO - *TYPE*	D (mm)	W (mm)	TIPO - *TYPE*	D (mm)	W (mm)
330		M8x1,0	15		10,1	33

204550082



LUNGHEZZA *LENGHT*	ATTACCO SUPERIORE *UPPER FASTENING POINT*			ATTACCO INFERIORE *LOWER FASTENING POINT*		
(mm)	TIPO - *TYPE*	D (mm)	W (mm)	TIPO - *TYPE*	D (mm)	W (mm)
330		M8x1,0	15		10,1	33

204550092



LUNGHEZZA *LENGHT*	ATTACCO SUPERIORE *UPPER FASTENING POINT*			ATTACCO INFERIORE *LOWER FASTENING POINT*		
(mm)	TIPO - *TYPE*	D (mm)	W (mm)	TIPO - *TYPE*	D (mm)	W (mm)
265		10,1	20		M8x1,25	20



204550122



LUNGHEZZA *LENGHT*	ATTACCO SUPERIORE *UPPER FASTENING POINT*			ATTACCO INFERIORE *LOWER FASTENING POINT*		
(mm)	TIPO - *TYPE*	D (mm)	W (mm)	TIPO - *TYPE*	D (mm)	W (mm)
245		10,1	20		M8x1,25	20

204550132



LUNGHEZZA *LENGHT*	ATTACCO SUPERIORE *UPPER FASTENING POINT*			ATTACCO INFERIORE *LOWER FASTENING POINT*		
(mm)	TIPO - *TYPE*	D (mm)	W (mm)	TIPO - *TYPE*	D (mm)	W (mm)
225		10,1	20		M8x1,25	20

204550142



LUNGHEZZA *LENGHT*	ATTACCO SUPERIORE *UPPER FASTENING POINT*			ATTACCO INFERIORE *LOWER FASTENING POINT*		
(mm)	TIPO - *TYPE*	D (mm)	W (mm)	TIPO - *TYPE*	D (mm)	W (mm)
255		10,2	20		M8x1,25	20

204550161



LUNGHEZZA *LENGHT*	ATTACCO SUPERIORE *UPPER FASTENING POINT*			ATTACCO INFERIORE *LOWER FASTENING POINT*		
(mm)	TIPO - *TYPE*	D (mm)	W (mm)	TIPO - *TYPE*	D (mm)	W (mm)
245		10,1	20		M8x1,25	20

204550162



LUNGHEZZA *LENGHT*	ATTACCO SUPERIORE *UPPER FASTENING POINT*			ATTACCO INFERIORE *LOWER FASTENING POINT*		
(mm)	TIPO - *TYPE*	D (mm)	W (mm)	TIPO - *TYPE*	D (mm)	W (mm)
245		10,1	20		M8x1,25	20



AMMORTIZZATORI

SHOCK ABSORBERS

204550181



LUNGHEZZA *LENGHT*	ATTACCO SUPERIORE *UPPER FASTENING POINT*			ATTACCO INFERIORE *LOWER FASTENING POINT*		
(mm)	TIPO - *TYPE*	D (mm)	W (mm)	TIPO - *TYPE*	D (mm)	W (mm)
280		10,1	20		M8x1,25	20

204550182



LUNGHEZZA *LENGHT*	ATTACCO SUPERIORE *UPPER FASTENING POINT*			ATTACCO INFERIORE *LOWER FASTENING POINT*		
(mm)	TIPO - *TYPE*	D (mm)	W (mm)	TIPO - *TYPE*	D (mm)	W (mm)
280		10,1	20		M8x1,25	20

204550191



LUNGHEZZA *LENGHT*	ATTACCO SUPERIORE *UPPER FASTENING POINT*			ATTACCO INFERIORE *LOWER FASTENING POINT*		
(mm)	TIPO - *TYPE*	D (mm)	W (mm)	TIPO - *TYPE*	D (mm)	W (mm)
280		10,2	20		M8x1,25	20

204550192



LUNGHEZZA *LENGHT*	ATTACCO SUPERIORE *UPPER FASTENING POINT*			ATTACCO INFERIORE *LOWER FASTENING POINT*		
(mm)	TIPO - *TYPE*	D (mm)	W (mm)	TIPO - *TYPE*	D (mm)	W (mm)
280		10,2	20		M8x1,25	20

204550221



LUNGHEZZA *LENGHT*	ATTACCO SUPERIORE *UPPER FASTENING POINT*			ATTACCO INFERIORE *LOWER FASTENING POINT*		
(mm)	TIPO - *TYPE*	D (mm)	W (mm)	TIPO - *TYPE*	D (mm)	W (mm)
325		M8x1,0	8		10,1	33



204550222



LUNGHEZZA *LENGHT*	ATTACCO SUPERIORE *UPPER FASTENING POINT*			ATTACCO INFERIORE *LOWER FASTENING POINT*		
(mm)	TIPO - *TYPE*	D (mm)	W (mm)	TIPO - *TYPE*	D (mm)	W (mm)
325		M8x1,0	25		10,1	33

204550281



LUNGHEZZA *LENGHT*	ATTACCO SUPERIORE *UPPER FASTENING POINT*			ATTACCO INFERIORE *LOWER FASTENING POINT*		
(mm)	TIPO - *TYPE*	D (mm)	W (mm)	TIPO - *TYPE*	D (mm)	W (mm)
318		M8x1,0	25		10,2	30

204550282



LUNGHEZZA *LENGHT*	ATTACCO SUPERIORE *UPPER FASTENING POINT*			ATTACCO INFERIORE *LOWER FASTENING POINT*		
(mm)	TIPO - *TYPE*	D (mm)	W (mm)	TIPO - *TYPE*	D (mm)	W (mm)
318		M8x1,0	25		10,2	30

204550302



LUNGHEZZA *LENGHT*	ATTACCO SUPERIORE *UPPER FASTENING POINT*			ATTACCO INFERIORE *LOWER FASTENING POINT*		
(mm)	TIPO - *TYPE*	D (mm)	W (mm)	TIPO - *TYPE*	D (mm)	W (mm)
336		10,1	20		M8x1,25	20

204550311



LUNGHEZZA *LENGHT*	ATTACCO SUPERIORE *UPPER FASTENING POINT*			ATTACCO INFERIORE *LOWER FASTENING POINT*		
(mm)	TIPO - *TYPE*	D (mm)	W (mm)	TIPO - *TYPE*	D (mm)	W (mm)
308		10,1	20		M8x1,25	20



AMMORTIZZATORI

SHOCK ABSORBERS

204550312



LUNGHEZZA *LENGHT*	ATTACCO SUPERIORE *UPPER FASTENING POINT*			ATTACCO INFERIORE *LOWER FASTENING POINT*		
(mm)	TIPO - *TYPE*	D (mm)	W (mm)	TIPO - *TYPE*	D (mm)	W (mm)
308		10,1	20		M8x1,25	20

204550313



LUNGHEZZA *LENGHT*	ATTACCO SUPERIORE *UPPER FASTENING POINT*			ATTACCO INFERIORE *LOWER FASTENING POINT*		
(mm)	TIPO - *TYPE*	D (mm)	W (mm)	TIPO - *TYPE*	D (mm)	W (mm)
308		10,1	20		M8x1,25	20

204550331



LUNGHEZZA *LENGHT*	ATTACCO SUPERIORE *UPPER FASTENING POINT*			ATTACCO INFERIORE *LOWER FASTENING POINT*		
(mm)	TIPO - *TYPE*	D (mm)	W (mm)	TIPO - *TYPE*	D (mm)	W (mm)
344		10,1	20		M8x1,25	20

204550332



LUNGHEZZA *LENGHT*	ATTACCO SUPERIORE *UPPER FASTENING POINT*			ATTACCO INFERIORE *LOWER FASTENING POINT*		
(mm)	TIPO - *TYPE*	D (mm)	W (mm)	TIPO - *TYPE*	D (mm)	W (mm)
344		10,1	20		M8x1,25	20

204550342



LUNGHEZZA *LENGHT*	ATTACCO SUPERIORE *UPPER FASTENING POINT*			ATTACCO INFERIORE *LOWER FASTENING POINT*		
(mm)	TIPO - *TYPE*	D (mm)	W (mm)	TIPO - *TYPE*	D (mm)	W (mm)
415		10x1,25	20		M8x1,25	20



204550343



LUNGHEZZA *LENGHT*	ATTACCO SUPERIORE *UPPER FASTENING POINT*			ATTACCO INFERIORE *LOWER FASTENING POINT*		
(mm)	TIPO - *TYPE*	D (mm)	W (mm)	TIPO - *TYPE*	D (mm)	W (mm)
415		10x1,25	20		M8x1,25	20

204550352



LUNGHEZZA *LENGHT*	ATTACCO SUPERIORE *UPPER FASTENING POINT*			ATTACCO INFERIORE *LOWER FASTENING POINT*		
(mm)	TIPO - *TYPE*	D (mm)	W (mm)	TIPO - *TYPE*	D (mm)	W (mm)
329		M8x1,0	20,5		10,1	37

204550362



LUNGHEZZA *LENGHT*	ATTACCO SUPERIORE *UPPER FASTENING POINT*			ATTACCO INFERIORE *LOWER FASTENING POINT*		
(mm)	TIPO - *TYPE*	D (mm)	W (mm)	TIPO - *TYPE*	D (mm)	W (mm)
339		10,1	30		14,1	24

204550372



LUNGHEZZA *LENGHT*	ATTACCO SUPERIORE *UPPER FASTENING POINT*			ATTACCO INFERIORE *LOWER FASTENING POINT*		
(mm)	TIPO - *TYPE*	D (mm)	W (mm)	TIPO - *TYPE*	D (mm)	W (mm)
280		10,15	21		M8x1,25	20

204550432



LUNGHEZZA *LENGHT*	ATTACCO SUPERIORE *UPPER FASTENING POINT*			ATTACCO INFERIORE *LOWER FASTENING POINT*		
(mm)	TIPO - *TYPE*	D (mm)	W (mm)	TIPO - *TYPE*	D (mm)	W (mm)
322,5		M8x1,0	21		10,2	30,5



AMMORTIZZATORI

SHOCK ABSORBERS

204550433



LUNGHEZZA *LENGHT*	ATTACCO SUPERIORE *UPPER FASTENING POINT*			ATTACCO INFERIORE *LOWER FASTENING POINT*		
(mm)	TIPO - *TYPE*	D (mm)	W (mm)	TIPO - *TYPE*	D (mm)	W (mm)
322,5		M8x1,0	21		10,2	30,5

204550442



LUNGHEZZA *LENGHT*	ATTACCO SUPERIORE *UPPER FASTENING POINT*			ATTACCO INFERIORE *LOWER FASTENING POINT*		
(mm)	TIPO - *TYPE*	D (mm)	W (mm)	TIPO - *TYPE*	D (mm)	W (mm)
344		8	21		10,1	24

204550452



LUNGHEZZA *LENGHT*	ATTACCO SUPERIORE *UPPER FASTENING POINT*			ATTACCO INFERIORE *LOWER FASTENING POINT*		
(mm)	TIPO - *TYPE*	D (mm)	W (mm)	TIPO - *TYPE*	D (mm)	W (mm)
340		10,2	28		10,1	33

204550462



LUNGHEZZA *LENGHT*	ATTACCO SUPERIORE *UPPER FASTENING POINT*			ATTACCO INFERIORE *LOWER FASTENING POINT*		
(mm)	TIPO - *TYPE*	D (mm)	W (mm)	TIPO - *TYPE*	D (mm)	W (mm)
345		8	21		14,1	24

204550463



LUNGHEZZA *LENGHT*	ATTACCO SUPERIORE *UPPER FASTENING POINT*			ATTACCO INFERIORE *LOWER FASTENING POINT*		
(mm)	TIPO - *TYPE*	D (mm)	W (mm)	TIPO - *TYPE*	D (mm)	W (mm)
345		8	21	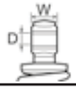	14,1	24



204550472



LUNGHEZZA *LENGHT*	ATTACCO SUPERIORE *UPPER FASTENING POINT*			ATTACCO INFERIORE *LOWER FASTENING POINT*		
(mm)	TIPO - *TYPE*	D (mm)	W (mm)	TIPO - *TYPE*	D (mm)	W (mm)
300		10,15	21		10,1	36

204550482



LUNGHEZZA *LENGHT*	ATTACCO SUPERIORE *UPPER FASTENING POINT*			ATTACCO INFERIORE *LOWER FASTENING POINT*		
(mm)	TIPO - *TYPE*	D (mm)	W (mm)	TIPO - *TYPE*	D (mm)	W (mm)
343		10,1	20		M8x1,25	20

204550492



LUNGHEZZA *LENGHT*	ATTACCO SUPERIORE *UPPER FASTENING POINT*			ATTACCO INFERIORE *LOWER FASTENING POINT*		
(mm)	TIPO - *TYPE*	D (mm)	W (mm)	TIPO - *TYPE*	D (mm)	W (mm)
358		10,1	20		M8x1,25	20

204550493



LUNGHEZZA *LENGHT*	ATTACCO SUPERIORE *UPPER FASTENING POINT*			ATTACCO INFERIORE *LOWER FASTENING POINT*		
(mm)	TIPO - *TYPE*	D (mm)	W (mm)	TIPO - *TYPE*	D (mm)	W (mm)
358		10,1	20		M8x1,25	20

204550502



LUNGHEZZA *LENGHT*	ATTACCO SUPERIORE *UPPER FASTENING POINT*			ATTACCO INFERIORE *LOWER FASTENING POINT*		
(mm)	TIPO - *TYPE*	D (mm)	W (mm)	TIPO - *TYPE*	D (mm)	W (mm)
343		10,1	20		M8x1,25	20



AMMORTIZZATORI

SHOCK ABSORBERS

204550503



LUNGHEZZA *LENGHT*	ATTACCO SUPERIORE *UPPER FASTENING POINT*			ATTACCO INFERIORE *LOWER FASTENING POINT*		
(mm)	TIPO - *TYPE*	D (mm)	W (mm)	TIPO - *TYPE*	D (mm)	W (mm)
343		10,1	20		M8x1,25	20

204550512



LUNGHEZZA *LENGHT*	ATTACCO SUPERIORE *UPPER FASTENING POINT*			ATTACCO INFERIORE *LOWER FASTENING POINT*		
(mm)	TIPO - *TYPE*	D (mm)	W (mm)	TIPO - *TYPE*	D (mm)	W (mm)
348		M8x1,0	25		14,1	24

204550513



LUNGHEZZA *LENGHT*	ATTACCO SUPERIORE *UPPER FASTENING POINT*			ATTACCO INFERIORE *LOWER FASTENING POINT*		
(mm)	TIPO - *TYPE*	D (mm)	W (mm)	TIPO - *TYPE*	D (mm)	W (mm)
348		M8x1,0	25		14,1	24

204550522



LUNGHEZZA *LENGHT*	ATTACCO SUPERIORE *UPPER FASTENING POINT*			ATTACCO INFERIORE *LOWER FASTENING POINT*		
(mm)	TIPO - *TYPE*	D (mm)	W (mm)	TIPO - *TYPE*	D (mm)	W (mm)
326		10,15	21		M8x1,25	20

204550523



LUNGHEZZA *LENGHT*	ATTACCO SUPERIORE *UPPER FASTENING POINT*			ATTACCO INFERIORE *LOWER FASTENING POINT*		
(mm)	TIPO - *TYPE*	D (mm)	W (mm)	TIPO - *TYPE*	D (mm)	W (mm)
326	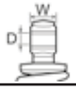	10,15	21		M8x1,25	20



204550532



LUNGHEZZA *LENGHT*	ATTACCO SUPERIORE *UPPER FASTENING POINT*			ATTACCO INFERIORE *LOWER FASTENING POINT*		
(mm)	TIPO - *TYPE*	D (mm)	W (mm)	TIPO - *TYPE*	D (mm)	W (mm)
390		10,15	21		M10x1,25	26,5

204550533



LUNGHEZZA *LENGHT*	ATTACCO SUPERIORE *UPPER FASTENING POINT*			ATTACCO INFERIORE *LOWER FASTENING POINT*		
(mm)	TIPO - *TYPE*	D (mm)	W (mm)	TIPO - *TYPE*	D (mm)	W (mm)
390		10,15	21		M10x1,25	26,5

204550542



LUNGHEZZA *LENGHT*	ATTACCO SUPERIORE *UPPER FASTENING POINT*			ATTACCO INFERIORE *LOWER FASTENING POINT*		
(mm)	TIPO - *TYPE*	D (mm)	W (mm)	TIPO - *TYPE*	D (mm)	W (mm)
328		10,15	21		M8x1,25	20

204550552



LUNGHEZZA *LENGHT*	ATTACCO SUPERIORE *UPPER FASTENING POINT*			ATTACCO INFERIORE *LOWER FASTENING POINT*		
(mm)	TIPO - *TYPE*	D (mm)	W (mm)	TIPO - *TYPE*	D (mm)	W (mm)
394		10,15	21		M10x1,25	23

204550562



LUNGHEZZA *LENGHT*	ATTACCO SUPERIORE *UPPER FASTENING POINT*			ATTACCO INFERIORE *LOWER FASTENING POINT*		
(mm)	TIPO - *TYPE*	D (mm)	W (mm)	TIPO - *TYPE*	D (mm)	W (mm)
398		10,15	21		M10x1,25	26,5



AMMORTIZZATORI

SHOCK ABSORBERS

204550572



LUNGHEZZA *LENGHT*	ATTACCO SUPERIORE *UPPER FASTENING POINT*			ATTACCO INFERIORE *LOWER FASTENING POINT*		
(mm)	TIPO - *TYPE*	D (mm)	W (mm)	TIPO - *TYPE*	D (mm)	W (mm)
320		10,15	21		M8x1,25	20

204550582



LUNGHEZZA *LENGHT*	ATTACCO SUPERIORE *UPPER FASTENING POINT*			ATTACCO INFERIORE *LOWER FASTENING POINT*		
(mm)	TIPO - *TYPE*	D (mm)	W (mm)	TIPO - *TYPE*	D (mm)	W (mm)
308		10,1	20		M8x1,25	20

204550592



LUNGHEZZA *LENGHT*	ATTACCO SUPERIORE *UPPER FASTENING POINT*			ATTACCO INFERIORE *LOWER FASTENING POINT*		
(mm)	TIPO - *TYPE*	D (mm)	W (mm)	TIPO - *TYPE*	D (mm)	W (mm)
338		10,1	20		M8x1,25	20

204550602



LUNGHEZZA *LENGHT*	ATTACCO SUPERIORE *UPPER FASTENING POINT*			ATTACCO INFERIORE *LOWER FASTENING POINT*		
(mm)	TIPO - *TYPE*	D (mm)	W (mm)	TIPO - *TYPE*	D (mm)	W (mm)
390		10,15	21		10,1	30

204550612



LUNGHEZZA *LENGHT*	ATTACCO SUPERIORE *UPPER FASTENING POINT*			ATTACCO INFERIORE *LOWER FASTENING POINT*		
(mm)	TIPO - *TYPE*	D (mm)	W (mm)	TIPO - *TYPE*	D (mm)	W (mm)
325		10,1	20		M10x1,25	20



204550622



LUNGHEZZA *LENGHT*	ATTACCO SUPERIORE *UPPER FASTENING POINT*			ATTACCO INFERIORE *LOWER FASTENING POINT*		
(mm)	TIPO - *TYPE*	D (mm)	W (mm)	TIPO - *TYPE*	D (mm)	W (mm)
340		10,1	20		M10x1,25	20

204550632



LUNGHEZZA *LENGHT*	ATTACCO SUPERIORE *UPPER FASTENING POINT*			ATTACCO INFERIORE *LOWER FASTENING POINT*		
(mm)	TIPO - *TYPE*	D (mm)	W (mm)	TIPO - *TYPE*	D (mm)	W (mm)
363		10,1	30		M10x1,25	30

204550642



LUNGHEZZA *LENGHT*	ATTACCO SUPERIORE *UPPER FASTENING POINT*			ATTACCO INFERIORE *LOWER FASTENING POINT*		
(mm)	TIPO - *TYPE*	D (mm)	W (mm)	TIPO - *TYPE*	D (mm)	W (mm)
345		10,1	21,6		10,1	33

204550651



LUNGHEZZA *LENGHT*	ATTACCO SUPERIORE *UPPER FASTENING POINT*			ATTACCO INFERIORE *LOWER FASTENING POINT*		
(mm)	TIPO - *TYPE*	D (mm)	W (mm)	TIPO - *TYPE*	D (mm)	W (mm)
377		10,5	30		10,5	30

204550652



LUNGHEZZA *LENGHT*	ATTACCO SUPERIORE *UPPER FASTENING POINT*			ATTACCO INFERIORE *LOWER FASTENING POINT*		
(mm)	TIPO - *TYPE*	D (mm)	W (mm)	TIPO - *TYPE*	D (mm)	W (mm)
377		10,5	30		10,5	30



AMMORTIZZATORI

SHOCK ABSORBERS

204550653



LUNGHEZZA *LENGHT*	ATTACCO SUPERIORE *UPPER FASTENING POINT*			ATTACCO INFERIORE *LOWER FASTENING POINT*		
(mm)	TIPO - *TYPE*	D (mm)	W (mm)	TIPO - *TYPE*	D (mm)	W (mm)
377		10,5	30		10,5	30

204550662



LUNGHEZZA *LENGHT*	ATTACCO SUPERIORE *UPPER FASTENING POINT*			ATTACCO INFERIORE *LOWER FASTENING POINT*		
(mm)	TIPO - *TYPE*	D (mm)	W (mm)	TIPO - *TYPE*	D (mm)	W (mm)
346		10,5	30		14,1	24

204550663



LUNGHEZZA *LENGHT*	ATTACCO SUPERIORE *UPPER FASTENING POINT*			ATTACCO INFERIORE *LOWER FASTENING POINT*		
(mm)	TIPO - *TYPE*	D (mm)	W (mm)	TIPO - *TYPE*	D (mm)	W (mm)
346		10,5	30		14,1	24

204550672



LUNGHEZZA *LENGHT*	ATTACCO SUPERIORE *UPPER FASTENING POINT*			ATTACCO INFERIORE *LOWER FASTENING POINT*		
(mm)	TIPO - *TYPE*	D (mm)	W (mm)	TIPO - *TYPE*	D (mm)	W (mm)
348		8	21		14,1	24

204550682



LUNGHEZZA *LENGHT*	ATTACCO SUPERIORE *UPPER FASTENING POINT*			ATTACCO INFERIORE *LOWER FASTENING POINT*		
(mm)	TIPO - *TYPE*	D (mm)	W (mm)	TIPO - *TYPE*	D (mm)	W (mm)
338		10,5	30		14,1	24



204550683



LUNGHEZZA *LENGHT*	ATTACCO SUPERIORE *UPPER FASTENING POINT*			ATTACCO INFERIORE *LOWER FASTENING POINT*		
(mm)	TIPO - *TYPE*	D (mm)	W (mm)	TIPO - *TYPE*	D (mm)	W (mm)
338		10,5	30		14,1	24

204550701



LUNGHEZZA *LENGHT*	ATTACCO SUPERIORE *UPPER FASTENING POINT*			ATTACCO INFERIORE *LOWER FASTENING POINT*		
(mm)	TIPO - *TYPE*	D (mm)	W (mm)	TIPO - *TYPE*	D (mm)	W (mm)
404		10,1	20,5		M10x1,25	27

204550702



LUNGHEZZA *LENGHT*	ATTACCO SUPERIORE *UPPER FASTENING POINT*			ATTACCO INFERIORE *LOWER FASTENING POINT*		
(mm)	TIPO - *TYPE*	D (mm)	W (mm)	TIPO - *TYPE*	D (mm)	W (mm)
404		10,1	20,5		M10x1,25	27

204550703



LUNGHEZZA *LENGHT*	ATTACCO SUPERIORE *UPPER FASTENING POINT*			ATTACCO INFERIORE *LOWER FASTENING POINT*		
(mm)	TIPO - *TYPE*	D (mm)	W (mm)	TIPO - *TYPE*	D (mm)	W (mm)
404		10,1	20,5		M10x1,25	27

204550712



LUNGHEZZA *LENGHT*	ATTACCO SUPERIORE *UPPER FASTENING POINT*			ATTACCO INFERIORE *LOWER FASTENING POINT*		
(mm)	TIPO - *TYPE*	D (mm)	W (mm)	TIPO - *TYPE*	D (mm)	W (mm)
311		10,15	21		M8x1,25	20



AMMORTIZZATORI

SHOCK ABSORBERS

204550722



LUNGHEZZA *LENGHT*	ATTACCO SUPERIORE *UPPER FASTENING POINT*			ATTACCO INFERIORE *LOWER FASTENING POINT*		
(mm)	TIPO - *TYPE*	D (mm)	W (mm)	TIPO - *TYPE*	D (mm)	W (mm)
377		10,15	21		M8x1,25	20

204550723



LUNGHEZZA *LENGHT*	ATTACCO SUPERIORE *UPPER FASTENING POINT*			ATTACCO INFERIORE *LOWER FASTENING POINT*		
(mm)	TIPO - *TYPE*	D (mm)	W (mm)	TIPO - *TYPE*	D (mm)	W (mm)
377		10,15	21		M8x1,25	20

204550732



LUNGHEZZA *LENGHT*	ATTACCO SUPERIORE *UPPER FASTENING POINT*			ATTACCO INFERIORE *LOWER FASTENING POINT*		
(mm)	TIPO - *TYPE*	D (mm)	W (mm)	TIPO - *TYPE*	D (mm)	W (mm)
377		10,5	30		10,5	30

204550742



LUNGHEZZA *LENGHT*	ATTACCO SUPERIORE *UPPER FASTENING POINT*			ATTACCO INFERIORE *LOWER FASTENING POINT*		
(mm)	TIPO - *TYPE*	D (mm)	W (mm)	TIPO - *TYPE*	D (mm)	W (mm)
390		10,2	21		10,2	30

204550752



LUNGHEZZA *LENGHT*	ATTACCO SUPERIORE *UPPER FASTENING POINT*			ATTACCO INFERIORE *LOWER FASTENING POINT*		
(mm)	TIPO - *TYPE*	D (mm)	W (mm)	TIPO - *TYPE*	D (mm)	W (mm)
334		10,5	30		10,5	30



204550753



LUNGHEZZA *LENGHT*	ATTACCO SUPERIORE *UPPER FASTENING POINT*			ATTACCO INFERIORE *LOWER FASTENING POINT*		
(mm)	TIPO - *TYPE*	D (mm)	W (mm)	TIPO - *TYPE*	D (mm)	W (mm)
334		10,5	30		10,5	30

204550762



LUNGHEZZA *LENGHT*	ATTACCO SUPERIORE *UPPER FASTENING POINT*			ATTACCO INFERIORE *LOWER FASTENING POINT*		
(mm)	TIPO - *TYPE*	D (mm)	W (mm)	TIPO - *TYPE*	D (mm)	W (mm)
390		10,2	21		M10x1,25	26,5

204550763



LUNGHEZZA *LENGHT*	ATTACCO SUPERIORE *UPPER FASTENING POINT*			ATTACCO INFERIORE *LOWER FASTENING POINT*		
(mm)	TIPO - *TYPE*	D (mm)	W (mm)	TIPO - *TYPE*	D (mm)	W (mm)
390		10,2	21		M10x1,25	26,5

204550772



LUNGHEZZA *LENGHT*	ATTACCO SUPERIORE *UPPER FASTENING POINT*			ATTACCO INFERIORE *LOWER FASTENING POINT*		
(mm)	TIPO - *TYPE*	D (mm)	W (mm)	TIPO - *TYPE*	D (mm)	W (mm)
350		10,5	30		10,5	30

204550782



LUNGHEZZA *LENGHT*	ATTACCO SUPERIORE *UPPER FASTENING POINT*			ATTACCO INFERIORE *LOWER FASTENING POINT*		
(mm)	TIPO - *TYPE*	D (mm)	W (mm)	TIPO - *TYPE*	D (mm)	W (mm)
340		10,5	30		14,1	24



AMMORTIZZATORI

SHOCK ABSORBERS

204550792



LUNGHEZZA *LENGHT*	ATTACCO SUPERIORE *UPPER FASTENING POINT*			ATTACCO INFERIORE *LOWER FASTENING POINT*		
(mm)	TIPO - *TYPE*	D (mm)	W (mm)	TIPO - *TYPE*	D (mm)	W (mm)
430		10,5	30		14,1	24

204550802



LUNGHEZZA *LENGHT*	ATTACCO SUPERIORE *UPPER FASTENING POINT*			ATTACCO INFERIORE *LOWER FASTENING POINT*		
(mm)	TIPO - *TYPE*	D (mm)	W (mm)	TIPO - *TYPE*	D (mm)	W (mm)
358		10,1	20		M8x1,25	20

204550812



LUNGHEZZA *LENGHT*	ATTACCO SUPERIORE *UPPER FASTENING POINT*			ATTACCO INFERIORE *LOWER FASTENING POINT*		
(mm)	TIPO - *TYPE*	D (mm)	W (mm)	TIPO - *TYPE*	D (mm)	W (mm)
260		10,1	21		M10x1,25	20

204550822



LUNGHEZZA *LENGHT*	ATTACCO SUPERIORE *UPPER FASTENING POINT*			ATTACCO INFERIORE *LOWER FASTENING POINT*		
(mm)	TIPO - *TYPE*	D (mm)	W (mm)	TIPO - *TYPE*	D (mm)	W (mm)
352		10,1	21		14,1	24

204550832



LUNGHEZZA *LENGHT*	ATTACCO SUPERIORE *UPPER FASTENING POINT*			ATTACCO INFERIORE *LOWER FASTENING POINT*		
(mm)	TIPO - *TYPE*	D (mm)	W (mm)	TIPO - *TYPE*	D (mm)	W (mm)
387		10,2	21		M10x1,25	26,5



204550842



LUNGHEZZA *LENGHT*	ATTACCO SUPERIORE *UPPER FASTENING POINT*			ATTACCO INFERIORE *LOWER FASTENING POINT*		
(mm)	TIPO - *TYPE*	D (mm)	W (mm)	TIPO - *TYPE*	D (mm)	W (mm)
387		10,2	21		M10x1,25	26,5

204550852



LUNGHEZZA *LENGHT*	ATTACCO SUPERIORE *UPPER FASTENING POINT*			ATTACCO INFERIORE *LOWER FASTENING POINT*		
(mm)	TIPO - *TYPE*	D (mm)	W (mm)	TIPO - *TYPE*	D (mm)	W (mm)
315		10,5	21		M8x1,25	20

204550862



LUNGHEZZA *LENGHT*	ATTACCO SUPERIORE *UPPER FASTENING POINT*			ATTACCO INFERIORE *LOWER FASTENING POINT*		
(mm)	TIPO - *TYPE*	D (mm)	W (mm)	TIPO - *TYPE*	D (mm)	W (mm)
310		10,2	20		10,5	33,5

204550882



LUNGHEZZA *LENGHT*	ATTACCO SUPERIORE *UPPER FASTENING POINT*			ATTACCO INFERIORE *LOWER FASTENING POINT*		
(mm)	TIPO - *TYPE*	D (mm)	W (mm)	TIPO - *TYPE*	D (mm)	W (mm)
348		M8x1,0	22		10,1	33

204550902



LUNGHEZZA *LENGHT*	ATTACCO SUPERIORE *UPPER FASTENING POINT*			ATTACCO INFERIORE *LOWER FASTENING POINT*		
(mm)	TIPO - *TYPE*	D (mm)	W (mm)	TIPO - *TYPE*	D (mm)	W (mm)
273		10,1	20		M8x1,25	20



AMMORTIZZATORI

SHOCK ABSORBERS

204550912



LUNGHEZZA *LENGHT*	ATTACCO SUPERIORE *UPPER FASTENING POINT*			ATTACCO INFERIORE *LOWER FASTENING POINT*		
(mm)	TIPO - *TYPE*	D (mm)	W (mm)	TIPO - *TYPE*	D (mm)	W (mm)
405		10,1	20		M8x1,25	20

204550922



LUNGHEZZA *LENGHT*	ATTACCO SUPERIORE *UPPER FASTENING POINT*			ATTACCO INFERIORE *LOWER FASTENING POINT*		
(mm)	TIPO - *TYPE*	D (mm)	W (mm)	TIPO - *TYPE*	D (mm)	W (mm)
401		10,2	30		M10x1,25	20

204550932



LUNGHEZZA *LENGHT*	ATTACCO SUPERIORE *UPPER FASTENING POINT*			ATTACCO INFERIORE *LOWER FASTENING POINT*		
(mm)	TIPO - *TYPE*	D (mm)	W (mm)	TIPO - *TYPE*	D (mm)	W (mm)
382		M8x1,0	24		10	33

204550941



LUNGHEZZA *LENGHT*	ATTACCO SUPERIORE *UPPER FASTENING POINT*			ATTACCO INFERIORE *LOWER FASTENING POINT*		
(mm)	TIPO - *TYPE*	D (mm)	W (mm)	TIPO - *TYPE*	D (mm)	W (mm)
321		10,2	18		M8x1,25	20

204550951



LUNGHEZZA *LENGHT*	ATTACCO SUPERIORE *UPPER FASTENING POINT*			ATTACCO INFERIORE *LOWER FASTENING POINT*		
(mm)	TIPO - *TYPE*	D (mm)	W (mm)	TIPO - *TYPE*	D (mm)	W (mm)
323		10,2	18		M8x1,25	20



204550961



LUNGHEZZA *LENGHT*	ATTACCO SUPERIORE *UPPER FASTENING POINT*			ATTACCO INFERIORE *LOWER FASTENING POINT*		
(mm)	TIPO - *TYPE*	D (mm)	W (mm)	TIPO - *TYPE*	D (mm)	W (mm)
303		10,2	18		M8x1,25	19

204550971



LUNGHEZZA *LENGHT*	ATTACCO SUPERIORE *UPPER FASTENING POINT*			ATTACCO INFERIORE *LOWER FASTENING POINT*		
(mm)	TIPO - *TYPE*	D (mm)	W (mm)	TIPO - *TYPE*	D (mm)	W (mm)
381		10,2	21		M8x1,25	19

204550981



LUNGHEZZA *LENGHT*	ATTACCO SUPERIORE *UPPER FASTENING POINT*			ATTACCO INFERIORE *LOWER FASTENING POINT*		
(mm)	TIPO - *TYPE*	D (mm)	W (mm)	TIPO - *TYPE*	D (mm)	W (mm)
381		10,2	21		M8x1,25	19

204551001



LUNGHEZZA *LENGHT*	ATTACCO SUPERIORE *UPPER FASTENING POINT*			ATTACCO INFERIORE *LOWER FASTENING POINT*		
(mm)	TIPO - *TYPE*	D (mm)	W (mm)	TIPO - *TYPE*	D (mm)	W (mm)
397		12,2	21		M10x1,25	26

204551011



LUNGHEZZA *LENGHT*	ATTACCO SUPERIORE *UPPER FASTENING POINT*			ATTACCO INFERIORE *LOWER FASTENING POINT*		
(mm)	TIPO - *TYPE*	D (mm)	W (mm)	TIPO - *TYPE*	D (mm)	W (mm)
325		10,2	21		M8x1,25	19



AMMORTIZZATORI

SHOCK ABSORBERS

204551021



LUNGHEZZA *LENGHT*	ATTACCO SUPERIORE *UPPER FASTENING POINT*			ATTACCO INFERIORE *LOWER FASTENING POINT*		
(mm)	TIPO - *TYPE*	D (mm)	W (mm)	TIPO - *TYPE*	D (mm)	W (mm)
325		10,2	21		M8x1,25	20

204551032 NEW



LUNGHEZZA *LENGHT*	ATTACCO SUPERIORE *UPPER FASTENING POINT*			ATTACCO INFERIORE *LOWER FASTENING POINT*		
(mm)	TIPO - *TYPE*	D (mm)	W (mm)	TIPO - *TYPE*	D (mm)	W (mm)
335		10,1	16		M8x1,25	20

204551042 NEW



LUNGHEZZA *LENGHT*	ATTACCO SUPERIORE *UPPER FASTENING POINT*			ATTACCO INFERIORE *LOWER FASTENING POINT*		
(mm)	TIPO - *TYPE*	D (mm)	W (mm)	TIPO - *TYPE*	D (mm)	W (mm)
344		10,1	20		M10x1,25	20

204551052 NEW



LUNGHEZZA *LENGHT*	ATTACCO SUPERIORE *UPPER FASTENING POINT*			ATTACCO INFERIORE *LOWER FASTENING POINT*		
(mm)	TIPO - *TYPE*	D (mm)	W (mm)	TIPO - *TYPE*	D (mm)	W (mm)
345		10,2	30		10,2	24

204551072 NEW



LUNGHEZZA *LENGHT*	ATTACCO SUPERIORE *UPPER FASTENING POINT*			ATTACCO INFERIORE *LOWER FASTENING POINT*		
(mm)	TIPO - *TYPE*	D (mm)	W (mm)	TIPO - *TYPE*	D (mm)	W (mm)
423		M8x1.0	25		10,2	30



204551082 NEW



LUNGHEZZA *LENGHT*	ATTACCO SUPERIORE *UPPER FASTENING POINT*			ATTACCO INFERIORE *LOWER FASTENING POINT*		
(mm)	TIPO - *TYPE*	D (mm)	W (mm)	TIPO - *TYPE*	D (mm)	W (mm)
335		10,2	21		M8x1,25	20

204551092 NEW



LUNGHEZZA *LENGHT*	ATTACCO SUPERIORE *UPPER FASTENING POINT*			ATTACCO INFERIORE *LOWER FASTENING POINT*		
(mm)	TIPO - *TYPE*	D (mm)	W (mm)	TIPO - *TYPE*	D (mm)	W (mm)
316		M8x1,0	19		14,1	24

204551102 NEW



LUNGHEZZA *LENGHT*	ATTACCO SUPERIORE *UPPER FASTENING POINT*			ATTACCO INFERIORE *LOWER FASTENING POINT*		
(mm)	TIPO - *TYPE*	D (mm)	W (mm)	TIPO - *TYPE*	D (mm)	W (mm)
323		10,15	21		M8x1,25	20

204551112 NEW



LUNGHEZZA *LENGHT*	ATTACCO SUPERIORE *UPPER FASTENING POINT*			ATTACCO INFERIORE *LOWER FASTENING POINT*		
(mm)	TIPO - *TYPE*	D (mm)	W (mm)	TIPO - *TYPE*	D (mm)	W (mm)
347		10,1	20		M8x1,25	20

204551122 NEW



LUNGHEZZA *LENGHT*	ATTACCO SUPERIORE *UPPER FASTENING POINT*			ATTACCO INFERIORE *LOWER FASTENING POINT*		
(mm)	TIPO - *TYPE*	D (mm)	W (mm)	TIPO - *TYPE*	D (mm)	W (mm)
406		10,1	20		M8x1,25	20



AMMORTIZZATORI

SHOCK ABSORBERS

204551132 NEW



LUNGHEZZA *LENGHT*	ATTACCO SUPERIORE *UPPER FASTENING POINT*			ATTACCO INFERIORE *LOWER FASTENING POINT*		
(mm)	TIPO - *TYPE*	D (mm)	W (mm)	TIPO - *TYPE*	D (mm)	W (mm)
349		10,1	20		M8x1,25	20

204551142 NEW



LUNGHEZZA *LENGHT*	ATTACCO SUPERIORE *UPPER FASTENING POINT*			ATTACCO INFERIORE *LOWER FASTENING POINT*		
(mm)	TIPO - *TYPE*	D (mm)	W (mm)	TIPO - *TYPE*	D (mm)	W (mm)
398		10,15	21		M10x1,25	26,5

204551152 NEW



LUNGHEZZA *LENGHT*	ATTACCO SUPERIORE *UPPER FASTENING POINT*			ATTACCO INFERIORE *LOWER FASTENING POINT*		
(mm)	TIPO - *TYPE*	D (mm)	W (mm)	TIPO - *TYPE*	D (mm)	W (mm)
361		M8x1,0	24		10,2	30

204584212



LUNGHEZZA *LENGHT*	ATTACCO SUPERIORE *UPPER FASTENING POINT*			ATTACCO INFERIORE *LOWER FASTENING POINT*		
(mm)	TIPO - *TYPE*	D (mm)	W (mm)	TIPO - *TYPE*	D (mm)	W (mm)
264		M8x1,25	14		M8	35

204584371



LUNGHEZZA *LENGHT*	ATTACCO SUPERIORE *UPPER FASTENING POINT*			ATTACCO INFERIORE *LOWER FASTENING POINT*		
(mm)	TIPO - *TYPE*	D (mm)	W (mm)	TIPO - *TYPE*	D (mm)	W (mm)
266		M10x1,25	15		M8x1,25	35



204584372



LUNGHEZZA *LENGHT*	ATTACCO SUPERIORE *UPPER FASTENING POINT*			ATTACCO INFERIORE *LOWER FASTENING POINT*		
(mm)	TIPO - *TYPE*	D (mm)	W (mm)	TIPO - *TYPE*	D (mm)	W (mm)
266		M10x1,25	15		M8x1,25	35

204584373



LUNGHEZZA *LENGHT*	ATTACCO SUPERIORE *UPPER FASTENING POINT*			ATTACCO INFERIORE *LOWER FASTENING POINT*		
(mm)	TIPO - *TYPE*	D (mm)	W (mm)	TIPO - *TYPE*	D (mm)	W (mm)
266		M10x1,25	15		M8x1,25	35

204584382



LUNGHEZZA *LENGHT*	ATTACCO SUPERIORE *UPPER FASTENING POINT*			ATTACCO INFERIORE *LOWER FASTENING POINT*		
(mm)	TIPO - *TYPE*	D (mm)	W (mm)	TIPO - *TYPE*	D (mm)	W (mm)
291		M10x1,25	16		M8x1,25	35

204584383



LUNGHEZZA *LENGHT*	ATTACCO SUPERIORE *UPPER FASTENING POINT*			ATTACCO INFERIORE *LOWER FASTENING POINT*		
(mm)	TIPO - *TYPE*	D (mm)	W (mm)	TIPO - *TYPE*	D (mm)	W (mm)
291		M10x1,25	16		M8x1,25	35

204584422 NEW



LUNGHEZZA *LENGHT*	ATTACCO SUPERIORE *UPPER FASTENING POINT*			ATTACCO INFERIORE *LOWER FASTENING POINT*		
(mm)	TIPO - *TYPE*	D (mm)	W (mm)	TIPO - *TYPE*	D (mm)	W (mm)
262		M10x1,25	16		M8x1,25	35



AMMORTIZZATORI

SHOCK ABSORBERS

204585112



LUNGHEZZA *LENGHT*	ATTACCO SUPERIORE *UPPER FASTENING POINT*			ATTACCO INFERIORE *LOWER FASTENING POINT*		
(mm)	TIPO - *TYPE*	D (mm)	W (mm)	TIPO - *TYPE*	D (mm)	W (mm)
296		M10x1,25	15		12,1	34

LEGENDA ICONE - *KEY ICONS*

				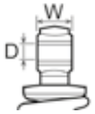		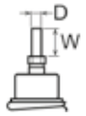	
Posteriore *Rear*	Anteriore *Front*	Precarico molla a camma *Step spring preload*	Precarico molla con ghiera filettata *Threaded spring preload*	Attacco ad occhiello *End eye fastening point*	Attacco a forchetta *Fork fastening point*	Attacco con perno *Stud fastening point*	Attacco con doppia vite *Two bolts fastening point*



AMMORTIZZATORI VESPA E LAMBRETTA - *VESPA AND LAMBRETTA SHOCK ABSORBERS*

Modello *Model*	CC	Da *From*	A *To*	Telaio *Frame*	Anteriore/Posteriore *Front/Rear*	OEM	Codice RMS *RMS Code*
PIAGGIO							
Vespa 125	50	1956	1957	VN2T	Ant | *Front*	1375714001	**204585062**
Vespa 125	50	1958	1959	VNA2T	Post | *Rear*	83816	**204560242**
Vespa 125	50	1960	1960	VNB1T	Ant | *Front*	1375714001	**204585062**
Vespa 125	50	1961	1961	VNB2T	Ant | *Front*	1375714001	**204585062**
Vespa 125	50	1961	1962	VNB3T	Post | *Rear*	83816	**204560242**
Vespa 125	50	1961	1962	VNB3T	Ant | *Front*	1375714001	**204585062**
Vespa 125	50	1964	1964	VNB5T	Ant | *Front*	1375714001	**204585062**
Vespa 125	50	1965	1966	VNB6T	Post | *Rear*	83816	**204560242**
Vespa 50	50	1963	1967	V5A1T	Post | *Rear*	610287M	**204550292**
Vespa 50	50	1963	1967	V5A1T	Post | *Rear*	610287M	**204550872**
Vespa 50	50	1963	1967	V5A1T	Post | *Rear*	2466204	**204560182**
Vespa 50	50	1963	1967	V5A1T	Post | *Rear*	494783	**204560191**
Vespa 50	50	1963	1967	V5A1T	Post | *Rear*	494783	**204560192**
Vespa 50	50	1963	1967	V5A1T	Post | *Rear*	494783	**204560193**
Vespa 50	50	1963	1967	V5A1T	Ant | *Front*	100282	**204584362**
Vespa 50	50	1967	1971	VA51T	Post | *Rear*	610287M	**204550292**
Vespa 50	50	1967	1971	VA51T	Post | *Rear*	610287M	**204550872**
Vespa 50	50	1967	1971	VA51T	Post | *Rear*	2466204	**204560182**
Vespa 50	50	1967	1971	VA51T	Post | *Rear*	494783	**204560191**
Vespa 50	50	1967	1971	VA51T	Post | *Rear*	494783	**204560192**
Vespa 50	50	1967	1971	VA51T	Post | *Rear*	494783	**204560193**
Vespa 50	50	1967	1971	VA51T	Ant | *Front*	100282	**204584362**
Vespa 50 Automatica	50	1990	1990	V5P2T	Post | *Rear*	266403	**204550382**
Vespa 50 Automatica	50	1990	1990	V5P2T	Post | *Rear*	266403	**204560201**
Vespa 50 Automatica	50	1990	1990	V5P2T	Post | *Rear*	266403	**204560202**
Vespa 50 Automatica	50	1990	1990	V5P2T	Post | *Rear*	2664264	**204560212**
Vespa 50 Automatica	50	1990	1990	V5P2T	Ant | *Front*	2665384	**204584262**
Vespa 50 Automatica	50	1990	1990	V5P2T	Ant | *Front*	-	**204584302**
Vespa 50 FL	50	1990	1990	V5N1	Post | *Rear*	266403	**204550382**
Vespa 50 FL	50	1990	1990	V5N1	Post | *Rear*	266403	**204560201**
Vespa 50 FL	50	1990	1990	V5N1	Post | *Rear*	266403	**204560202**
Vespa 50 FL	50	1990	1990	V5N1	Post | *Rear*	2664264	**204560212**
Vespa 50 FL	50	1990	1990	V5N1	Ant | *Front*	2665384	**204584262**
Vespa 50 FL	50	1990	1990	V5N1	Ant | *Front*	-	**204584302**
Vespa 50 L	50	1966	1970	V5A1T	Post | *Rear*	610287M	**204550292**
Vespa 50 L	50	1966	1970	V5A1T	Post | *Rear*	610287M	**204550872**
Vespa 50 L	50	1966	1970	V5A1T	Post | *Rear*	2466204	**204560182**
Vespa 50 L	50	1966	1970	V5A1T	Post | *Rear*	494783	**204560191**
Vespa 50 L	50	1966	1970	V5A1T	Post | *Rear*	494783	**204560192**
Vespa 50 L	50	1966	1970	V5A1T	Post | *Rear*	494783	**204560193**
Vespa 50 L	50	1966	1970	V5A1T	Post | *Rear*	98812	**204560282**
Vespa 50 L	50	1966	1970	V5A1T	Ant | *Front*	100282	**204584362**
Vespa 50 N	50	1963	1971	V5A1T	Post | *Rear*	610287M	**204550292**
Vespa 50 N	50	1963	1971	V5A1T	Post | *Rear*	610287M	**204550872**
Vespa 50 N	50	1963	1971	V5A1T	Post | *Rear*	2466204	**204560182**
Vespa 50 N	50	1963	1971	V5A1T	Post | *Rear*	494783	**204560191**
Vespa 50 N	50	1963	1971	V5A1T	Post | *Rear*	494783	**204560192**
Vespa 50 N	50	1963	1971	V5A1T	Post | *Rear*	494783	**204560193**
Vespa 50 N	50	1963	1971	V5A1T	Post | *Rear*	98812	**204560282**
Vespa 50 N	50	1963	1971	V5A1T	Ant | *Front*	100282	**204584362**
Vespa 50 R	50	1969	1971	V5A1T	Post | *Rear*	610287M	**204550292**
Vespa 50 R	50	1969	1971	V5A1T	Post | *Rear*	610287M	**204550872**
Vespa 50 R	50	1969	1971	V5A1T	Post | *Rear*	2466204	**204560182**
Vespa 50 R	50	1969	1971	V5A1T	Post | *Rear*	494783	**204560191**
Vespa 50 R	50	1969	1971	V5A1T	Post | *Rear*	494783	**204560192**



AMMORTIZZATORI

SHOCK ABSORBERS

Modello *Model*	**CC**	**Da** *From*	**A** *To*	**Telaio** *Frame*	**Anteriore/Posteriore** *Front/Rear*	**OEM**	**Codice RMS** *RMS Code*
Vespa 50 R	50	1969	1971	V5A1T	Post | *Rear*	494783	**204560193**
Vespa 50 R	50	1969	1971	V5A1T	Post | *Rear*	98812	**204560282**
Vespa 50 R	50	1969	1971	V5A1T	Ant | *Front*	100282	**204584362**
Vespa 50 Revival	50	1991	1991	V5R1T	Post | *Rear*	610287M	**204550292**
Vespa 50 Revival	50	1991	1991	V5R1T	Post | *Rear*	610287M	**204550872**
Vespa 50 Revival	50	1991	1991	V5R1T	Post | *Rear*	2466204	**204560182**
Vespa 50 Revival	50	1991	1991	V5R1T	Post | *Rear*	494783	**204560191**
Vespa 50 Revival	50	1991	1991	V5R1T	Post | *Rear*	494783	**204560192**
Vespa 50 Revival	50	1991	1991	V5R1T	Post | *Rear*	494783	**204560193**
Vespa 50 S	50	1963	1968	V5SA1T	Post | *Rear*	610287M	**204550292**
Vespa 50 S	50	1963	1968	V5SA1T	Post | *Rear*	610287M	**204550872**
Vespa 50 S	50	1963	1968	V5SA1T	Post | *Rear*	2466204	**204560182**
Vespa 50 S	50	1963	1968	V5SA1T	Post | *Rear*	494783	**204560191**
Vespa 50 S	50	1963	1968	V5SA1T	Post | *Rear*	494783	**204560192**
Vespa 50 S	50	1963	1968	V5SA1T	Post | *Rear*	494783	**204560193**
Vespa 50 S	50	1963	1968	V5SA1T	Ant | *Front*	100282	**204584362**
Vespa 50 Special	50	1970	1972	V5A2T	Post | *Rear*	610287M	**204550292**
Vespa 50 Special	50	1970	1972	V5A2T	Post | *Rear*	610287M	**204550872**
Vespa 50 Special	50	1970	1972	V5A2T	Post | *Rear*	2466204	**204560182**
Vespa 50 Special	50	1970	1972	V5A2T	Post | *Rear*	494783	**204560191**
Vespa 50 Special	50	1970	1972	V5A2T	Post | *Rear*	494783	**204560192**
Vespa 50 Special	50	1970	1972	V5A2T	Post | *Rear*	494783	**204560193**
Vespa 50 Special	50	1970	1972	V5A2T	Ant | *Front*	1379364	**204584242**
Vespa 50 Special	50	1970	1972	V5A2T	Ant | *Front*	1379364	**204584243**
Vespa 50 Special	50	1970	1972	V5A2T	Ant | *Front*	610290M	**204584251**
Vespa 50 Special	50	1970	1972	V5A2T	Ant | *Front*	610290M	**204584252**
Vespa 50 Special	50	1970	1972	V5A2T	Ant | *Front*	610290M	**204585072**
Vespa 50 Special	50	1970	1972	V5A2T	Ant | *Front*	610290M	**204585092**
Vespa 50 Special	50	1972	1975	V5B1T	Post | *Rear*	610287M	**204550292**
Vespa 50 Special	50	1972	1975	V5B1T	Post | *Rear*	610287M	**204550872**
Vespa 50 Special	50	1972	1975	V5B1T	Post | *Rear*	2466204	**204560182**
Vespa 50 Special	50	1972	1975	V5B1T	Post | *Rear*	494783	**204560191**
Vespa 50 Special	50	1972	1975	V5B1T	Post | *Rear*	494783	**204560192**
Vespa 50 Special	50	1972	1975	V5B1T	Post | *Rear*	494783	**204560193**
Vespa 50 Special	50	1972	1975	V5B1T	Ant | *Front*	1379364	**204584242**
Vespa 50 Special	50	1972	1975	V5B1T	Ant | *Front*	1379364	**204584243**
Vespa 50 Special	50	1972	1975	V5B1T	Ant | *Front*	610290M	**204584251**
Vespa 50 Special	50	1972	1975	V5B1T	Ant | *Front*	610290M	**204584252**
Vespa 50 Special	50	1972	1975	V5B1T	Ant | *Front*	610290M	**204585072**
Vespa 50 Special	50	1972	1975	V5B1T	Ant | *Front*	610290M	**204585092**
Vespa 50 Special	50	1975	1983	V5B3T	Post | *Rear*	610287M	**204550292**
Vespa 50 Special	50	1975	1983	V5B3T	Post | *Rear*	610287M	**204550872**
Vespa 50 Special	50	1975	1983	V5B3T	Post | *Rear*	2466204	**204560182**
Vespa 50 Special	50	1975	1983	V5B3T	Post | *Rear*	494783	**204560191**
Vespa 50 Special	50	1975	1983	V5B3T	Post | *Rear*	494783	**204560192**
Vespa 50 Special	50	1975	1983	V5B3T	Post | *Rear*	494783	**204560193**
Vespa 50 Special	50	1975	1983	V5B3T	Ant | *Front*	1379364	**204584242**
Vespa 50 Special	50	1975	1983	V5B3T	Ant | *Front*	1379364	**204584243**
Vespa 50 Special	50	1975	1983	V5B3T	Ant | *Front*	610290M	**204584251**
Vespa 50 Special	50	1975	1983	V5B3T	Ant | *Front*	610290M	**204584252**
Vespa 50 Special	50	1975	1983	V5B3T	Ant | *Front*	610290M	**204585072**
Vespa 50 Special	50	1975	1983	V5B3T	Ant | *Front*	610290M	**204585092**
Vespa 50 Special Elestart	50	1970	1972	V5A3T	Post | *Rear*	610287M	**204550292**
Vespa 50 Special Elestart	50	1970	1972	V5A3T	Post | *Rear*	610287M	**204550872**
Vespa 50 Special Elestart	50	1970	1972	V5A3T	Post | *Rear*	2466204	**204560182**
Vespa 50 Special Elestart	50	1970	1972	V5A3T	Post | *Rear*	494783	**204560191**
Vespa 50 Special Elestart	50	1970	1972	V5A3T	Post | *Rear*	494783	**204560192**
Vespa 50 Special Elestart	50	1970	1972	V5A3T	Post | *Rear*	494783	**204560193**



Modello *Model*	**CC**	**Da** *From*	**A** *To*	**Telaio** *Frame*	**Anteriore/Posteriore** *Front/Rear*	**OEM**	**Codice RMS** *RMS Code*
Vespa 50 Special Elestart	50	1970	1972	V5A3T	Ant | *Front*	1379364	**204584242**
Vespa 50 Special Elestart	50	1970	1972	V5A3T	Ant | *Front*	1379364	**204584243**
Vespa 50 Special Elestart	50	1970	1972	V5A3T	Ant | *Front*	610290M	**204584251**
Vespa 50 Special Elestart	50	1970	1972	V5A3T	Ant | *Front*	610290M	**204584252**
Vespa 50 Special Elestart	50	1970	1972	V5A3T	Ant | *Front*	610290M	**204585072**
Vespa 50 Special Elestart	50	1970	1972	V5A3T	Ant | *Front*	610290M	**204585092**
Vespa 50 Special Elestart	50	1972	1975	V5B2T	Post | *Rear*	610287M	**204550292**
Vespa 50 Special Elestart	50	1972	1975	V5B2T	Post | *Rear*	610287M	**204550872**
Vespa 50 Special Elestart	50	1972	1975	V5B2T	Post | *Rear*	2466204	**204560182**
Vespa 50 Special Elestart	50	1972	1975	V5B2T	Post | *Rear*	494783	**204560191**
Vespa 50 Special Elestart	50	1972	1975	V5B2T	Post | *Rear*	494783	**204560192**
Vespa 50 Special Elestart	50	1972	1975	V5B2T	Post | *Rear*	494783	**204560193**
Vespa 50 Special Elestart	50	1972	1975	V5B2T	Ant | *Front*	1379364	**204584242**
Vespa 50 Special Elestart	50	1972	1975	V5B2T	Ant | *Front*	1379364	**204584243**
Vespa 50 Special Elestart	50	1972	1975	V5B2T	Ant | *Front*	610290M	**204584251**
Vespa 50 Special Elestart	50	1972	1975	V5B2T	Ant | *Front*	610290M	**204584252**
Vespa 50 Special Elestart	50	1972	1975	V5B2T	Ant | *Front*	610290M	**204585072**
Vespa 50 Special Elestart	50	1972	1975	V5B2T	Ant | *Front*	610290M	**204585092**
Vespa 50 Special Elestart	50	1975	1976	V5B4T	Post | *Rear*	610287M	**204550292**
Vespa 50 Special Elestart	50	1975	1976	V5B4T	Post | *Rear*	610287M	**204550872**
Vespa 50 Special Elestart	50	1975	1976	V5B4T	Post | *Rear*	2466204	**204560182**
Vespa 50 Special Elestart	50	1975	1976	V5B4T	Post | *Rear*	494783	**204560191**
Vespa 50 Special Elestart	50	1975	1976	V5B4T	Post | *Rear*	494783	**204560192**
Vespa 50 Special Elestart	50	1975	1976	V5B4T	Post | *Rear*	494783	**204560193**
Vespa 50 Special Elestart	50	1975	1976	V5B4T	Ant | *Front*	1379364	**204584242**
Vespa 50 Special Elestart	50	1975	1976	V5B4T	Ant | *Front*	1379364	**204584243**
Vespa 50 Special Elestart	50	1975	1976	V5B4T	Ant | *Front*	610290M	**204584251**
Vespa 50 Special Elestart	50	1975	1976	V5B4T	Ant | *Front*	610290M	**204584252**
Vespa 50 Special Elestart	50	1975	1976	V5B4T	Ant | *Front*	610290M	**204585072**
Vespa 50 Special Elestart	50	1975	1976	V5B4T	Ant | *Front*	610290M	**204585092**
Vespa Pk 50	50	1982	1984	V5X1T	Post | *Rear*	266403	**204550382**
Vespa Pk 50	50	1982	1984	V5X1T	Post | *Rear*	266403	**204560201**
Vespa Pk 50	50	1982	1984	V5X1T	Post | *Rear*	266403	**204560202**
Vespa Pk 50	50	1982	1984	V5X1T	Post | *Rear*	2664264	**204560212**
Vespa Pk 50 Automatica	50	1984	1989	V5A1T	Post | *Rear*	266403	**204550382**
Vespa Pk 50 Automatica	50	1984	1989	V5A1T	Post | *Rear*	266403	**204560201**
Vespa Pk 50 Automatica	50	1984	1989	V5A1T	Post | *Rear*	266403	**204560202**
Vespa Pk 50 Automatica	50	1984	1989	V5A1T	Post | *Rear*	2664264	**204560212**
Vespa PK 50 HP	50	1991	1999	V5N2T	Post | *Rear*	266403	**204550382**
Vespa PK 50 HP	50	1991	1999	V5N2T	Post | *Rear*	266403	**204560201**
Vespa PK 50 HP	50	1991	1999	V5N2T	Post | *Rear*	266403	**204560202**
Vespa PK 50 HP	50	1991	1999	V5N2T	Post | *Rear*	2664264	**204560212**
Vespa PK 50 HP	50	1991	1999	V5N2T	Ant | *Front*	2665384	**204584262**
Vespa PK 50 HP	50	1991	1999	V5N2T	Ant | *Front*	-	**204584302**
Vespa PK 50 N	50	1990	1990	V5X5	Post | *Rear*	266403	**204550382**
Vespa PK 50 N	50	1990	1990	V5X5	Post | *Rear*	266403	**204560201**
Vespa PK 50 N	50	1990	1990	V5X5	Post | *Rear*	266403	**204560202**
Vespa PK 50 N	50	1990	1990	V5X5	Post | *Rear*	2664264	**204560212**
Vespa PK 50 N	50	1990	1990	V5X5	Ant | *Front*	2665384	**204584262**
Vespa PK 50 N	50	1990	1990	V5X5	Ant | *Front*	-	**204584302**
Vespa PK 50 N Speedmatic	50	1990	1990	V5P1	Post | *Rear*	266403	**204550382**
Vespa PK 50 N Speedmatic	50	1990	1990	V5P1	Post | *Rear*	266403	**204560201**
Vespa PK 50 N Speedmatic	50	1990	1990	V5P1	Post | *Rear*	266403	**204560202**
Vespa PK 50 N Speedmatic	50	1990	1990	V5P1	Post | *Rear*	2664264	**204560212**
Vespa PK 50 N Speedmatic	50	1990	1990	V5P1	Ant | *Front*	2665384	**204584262**
Vespa PK 50 N Speedmatic	50	1990	1990	V5P1	Ant | *Front*	-	**204584302**
Vespa Pk 50 Rush	50	1988	1988	V5X4T	Post | *Rear*	266403	**204550382**
Vespa Pk 50 Rush	50	1988	1988	V5X4T	Post | *Rear*	266403	**204560201**



Modello *Model*	**CC**	**Da** *From*	**A** *To*	**Telaio** *Frame*	**Anteriore/Posteriore** *Front/Rear*	**OEM**	**Codice RMS** *RMS Code*
Vespa Pk 50 Rush	50	1988	1988	V5X4T	Post | *Rear*	266403	**204560202**
Vespa Pk 50 Rush	50	1988	1988	V5X4T	Post | *Rear*	2664264	**204560212**
Vespa Pk 50 Rush	50	1988	1988	V5X4T	Ant | *Front*	2665384	**204584262**
Vespa Pk 50 Rush	50	1988	1988	V5X4T	Ant | *Front*	-	**204584302**
Vespa Pk 50 Rush Elestart	50	1989	1989	V5X4T	Post | *Rear*	266403	**204550382**
Vespa Pk 50 Rush Elestart	50	1989	1989	V5X4T	Post | *Rear*	266403	**204560201**
Vespa Pk 50 Rush Elestart	50	1989	1989	V5X4T	Post | *Rear*	266403	**204560202**
Vespa Pk 50 Rush Elestart	50	1989	1989	V5X4T	Post | *Rear*	2664264	**204560212**
Vespa Pk 50 Rush Elestart	50	1989	1989	V5X4T	Ant | *Front*	2665384	**204584262**
Vespa Pk 50 Rush Elestart	50	1989	1989	V5X4T	Ant | *Front*	-	**204584302**
Vespa Pk 50 S	50	1982	1982	V5X2T	Post | *Rear*	266403	**204550382**
Vespa Pk 50 S	50	1982	1982	V5X2T	Post | *Rear*	266403	**204560201**
Vespa Pk 50 S	50	1982	1982	V5X2T	Post | *Rear*	266403	**204560202**
Vespa Pk 50 S	50	1982	1982	V5X2T	Post | *Rear*	2664264	**204560212**
Vespa Pk 50 Ss	50	1983	1983	V5S1T	Post | *Rear*	266403	**204550382**
Vespa Pk 50 Ss	50	1983	1983	V5S1T	Post | *Rear*	266403	**204560201**
Vespa Pk 50 Ss	50	1983	1983	V5S1T	Post | *Rear*	266403	**204560202**
Vespa Pk 50 Ss	50	1983	1983	V5S1T	Post | *Rear*	2664264	**204560212**
Vespa Pk 50 Ss Elestart	50	1983	1983	V5S1T	Post | *Rear*	266403	**204550382**
Vespa Pk 50 Ss Elestart	50	1983	1983	V5S1T	Post | *Rear*	266403	**204560201**
Vespa Pk 50 Ss Elestart	50	1983	1983	V5S1T	Post | *Rear*	266403	**204560202**
Vespa Pk 50 Ss Elestart	50	1983	1983	V5S1T	Post | *Rear*	2664264	**204560212**
Vespa Pk 50 XL	50	1985	1988	V5X3T	Post | *Rear*	266403	**204550382**
Vespa Pk 50 XL	50	1985	1988	V5X3T	Post | *Rear*	266403	**204560201**
Vespa Pk 50 XL	50	1985	1988	V5X3T	Post | *Rear*	266403	**204560202**
Vespa Pk 50 XL	50	1985	1988	V5X3T	Post | *Rear*	2664264	**204560212**
Vespa Pk 50 XL	50	1985	1988	V5X3T	Ant | *Front*	2665384	**204584262**
Vespa Pk 50 XL	50	1985	1988	V5X3T	Ant | *Front*	-	**204584302**
Vespa Pk 50 XL Elestart	50	1986	1986	V5X3T	Post | *Rear*	266403	**204550382**
Vespa Pk 50 XL Elestart	50	1986	1986	V5X3T	Post | *Rear*	266403	**204560201**
Vespa Pk 50 XL Elestart	50	1986	1986	V5X3T	Post | *Rear*	266403	**204560202**
Vespa Pk 50 XL Elestart	50	1986	1986	V5X3T	Post | *Rear*	2664264	**204560212**
Vespa Pk 50 XL Elestart	50	1986	1986	V5X3T	Ant | *Front*	2665384	**204584262**
Vespa Pk 50 XL Elestart	50	1986	1986	V5X3T	Ant | *Front*	-	**204584302**
Vespa Pk 50 XL Plurimatic	50	1985	1990	V5A2T	Post | *Rear*	2664264	**204560212**
Vespa Pk 50 XL Plurimatic	50	1985	1990	V5A2T	Ant | *Front*	2665384	**204584262**
Vespa Pk 50 XL Plurimatic	50	1985	1990	V5A2T	Ant | *Front*	-	**204584302**
Vespa Pk 50 XL Plurimatic	50	1985	1990	VA52T	Post | *Rear*	266403	**204550382**
Vespa Pk 50 XL Plurimatic	50	1985	1990	VA52T	Post | *Rear*	266403	**204560201**
Vespa Pk 50 XL Plurimatic	50	1985	1990	VA52T	Post | *Rear*	266403	**204560202**
Vespa Pk 50 XL Plurimatic	50	1985	1990	VA52T	Post | *Rear*	2664264	**204560212**
Vespa Pk 50 XL Plurimatic	50	1985	1990	VA52T	Ant | *Front*	2665384	**204584262**
Vespa Pk 50 XL Plurimatic	50	1985	1990	VA52T	Ant | *Front*	-	**204584302**
Vespa Pk 50 XL Rush	50	1988	1989	V5X4T	Post | *Rear*	266403	**204550382**
Vespa Pk 50 XL Rush	50	1988	1989	V5X4T	Post | *Rear*	266403	**204560201**
Vespa Pk 50 XL Rush	50	1988	1989	V5X4T	Post | *Rear*	266403	**204560202**
Vespa Pk 50 XL Rush	50	1988	1989	V5X4T	Post | *Rear*	2664264	**204560212**
Vespa Pk 50 XLS	50	1986	1986	V5S2T	Post | *Rear*	266403	**204550382**
Vespa Pk 50 XLS	50	1986	1986	V5S2T	Post | *Rear*	266403	**204560201**
Vespa Pk 50 XLS	50	1986	1986	V5S2T	Post | *Rear*	266403	**204560202**
Vespa Pk 50 XLS	50	1986	1986	V5S2T	Post | *Rear*	2664264	**204560212**
Vespa Pk 50 XLS	50	1986	1986	V5S2T	Ant | *Front*	2665384	**204584262**
Vespa Pk 50 XLS	50	1986	1986	V5S2T	Ant | *Front*	-	**204584302**
Vespa Sprinter	50	1971	1973	V5SS2T	Post | *Rear*	610287M	**204550292**
Vespa Sprinter	50	1971	1973	V5SS2T	Post | *Rear*	610287M	**204550872**
Vespa Sprinter	50	1971	1973	V5SS2T	Post | *Rear*	2466204	**204560182**
Vespa Sprinter	50	1971	1973	V5SS2T	Post | *Rear*	494783	**204560191**
Vespa Sprinter	50	1971	1973	V5SS2T	Post | *Rear*	494783	**204560192**



Modello *Model*	CC	Da *From*	A *To*	Telaio *Frame*	Anteriore/Posteriore *Front/Rear*	OEM	Codice RMS *RMS Code*
Vespa Sprinter	50	1971	1973	V5SS2T	Post | *Rear*	494783	**204560193**
Vespa Sprinter	50	1971	1973	V5SS2T	Ant | *Front*	1379364	**204584242**
Vespa Sprinter	50	1971	1973	V5SS2T	Ant | *Front*	1379364	**204584243**
Vespa Sprinter	50	1971	1973	V5SS2T	Ant | *Front*	610290M	**204584251**
Vespa Sprinter	50	1971	1973	V5SS2T	Ant | *Front*	610290M	**204584252**
Vespa Sprinter	50	1971	1973	V5SS2T	Ant | *Front*	610290M	**204585072**
Vespa Sprinter	50	1971	1973	V5SS2T	Ant | *Front*	610290M	**204585092**
Vespa SS 50	50	1965	1971	V5SS1T	Post | *Rear*	610287M	**204550292**
Vespa SS 50	50	1965	1971	V5SS1T	Post | *Rear*	610287M	**204550872**
Vespa SS 50	50	1965	1971	V5SS1T	Post | *Rear*	2466204	**204560182**
Vespa SS 50	50	1965	1971	V5SS1T	Post | *Rear*	494783	**204560191**
Vespa SS 50	50	1965	1971	V5SS1T	Post | *Rear*	494783	**204560192**
Vespa SS 50	50	1965	1971	V5SS1T	Post | *Rear*	494783	**204560193**
Vespa SS 50	50	1965	1971	V5SS1T	Ant | *Front*	610290M	**204584251**
Vespa SS 50	50	1965	1971	V5SS1T	Ant | *Front*	610290M	**204584252**
Vespa SS 50	50	1965	1971	V5SS1T	Ant | *Front*	100282	**204584362**
Vespa SS 50	50	1965	1971	V5SS1T	Ant | *Front*	610290M	**204585072**
Vespa SS 50	50	1965	1971	V5SS1T	Ant | *Front*	610290M	**204585092**
Vespa Pk 80 S	80	1982	1982	V8X5T	Post | *Rear*	266403	**204550382**
Vespa Pk 80 S	80	1982	1982	V8X5T	Post | *Rear*	266403	**204560201**
Vespa Pk 80 S	80	1982	1982	V8X5T	Post | *Rear*	266403	**204560202**
Vespa Pk 80 S	80	1982	1982	V8X5T	Post | *Rear*	2664264	**204560212**
Vespa Pk 80 S	80	1984	1984	VA81T	Post | *Rear*	266403	**204550382**
Vespa Pk 80 S	80	1984	1984	VA81T	Post | *Rear*	266403	**204560201**
Vespa Pk 80 S	80	1984	1984	VA81T	Post | *Rear*	266403	**204560202**
Vespa Pk 80 S	80	1984	1984	VA81T	Post | *Rear*	2664264	**204560212**
Vespa Pk 80 S Automatica	80	1984	1984	VA81T	Post | *Rear*	266403	**204560201**
Vespa Pk 80 S Automatica	80	1984	1984	VA81T	Post | *Rear*	266403	**204560202**
Vespa Pk 80 S Automatica	80	1984	1984	VA81T	Post | *Rear*	2664264	**204560212**
Vespa Pk 80 S Elestart	80	1983	1983	V8X5T	Post | *Rear*	266403	**204550382**
Vespa Pk 80 S Elestart	80	1983	1983	V8X5T	Post | *Rear*	266403	**204560201**
Vespa Pk 80 S Elestart	80	1983	1983	V8X5T	Post | *Rear*	266403	**204560202**
Vespa Pk 80 S Elestart	80	1983	1983	V8X5T	Post | *Rear*	2664264	**204560212**
Vespa 90	90	1963	1968	V9A1T	Post | *Rear*	610287M	**204550292**
Vespa 90	90	1963	1968	V9A1T	Post | *Rear*	610287M	**204550872**
Vespa 90	90	1963	1968	V9A1T	Post | *Rear*	2466204	**204560182**
Vespa 90	90	1963	1968	V9A1T	Post | *Rear*	494783	**204560191**
Vespa 90	90	1963	1968	V9A1T	Post | *Rear*	494783	**204560192**
Vespa 90	90	1963	1968	V9A1T	Post | *Rear*	494783	**204560193**
Vespa 90	90	1963	1968	V9A1T	Ant | *Front*	1379364	**204584242**
Vespa 90	90	1963	1968	V9A1T	Ant | *Front*	1379364	**204584243**
Vespa 90	90	1963	1968	V9A1T	Ant | *Front*	610290M	**204584251**
Vespa 90	90	1963	1968	V9A1T	Ant | *Front*	610290M	**204584252**
Vespa 90	90	1963	1968	V9A1T	Ant | *Front*	610290M	**204585072**
Vespa 90	90	1963	1968	V9A1T	Ant | *Front*	610290M	**204585092**
Vespa 90 Racer	90	1971	1973	V9SS2T	Post | *Rear*	610287M	**204550292**
Vespa 90 Racer	90	1971	1973	V9SS2T	Post | *Rear*	610287M	**204550872**
Vespa 90 Racer	90	1971	1973	V9SS2T	Post | *Rear*	2466204	**204560182**
Vespa 90 Racer	90	1971	1973	V9SS2T	Post | *Rear*	494783	**204560191**
Vespa 90 Racer	90	1971	1973	V9SS2T	Post | *Rear*	494783	**204560192**
Vespa 90 Racer	90	1971	1973	V9SS2T	Post | *Rear*	494783	**204560193**
Vespa 90 Racer	90	1971	1973	V9SS2T	Ant | *Front*	1379364	**204584242**
Vespa 90 Racer	90	1971	1973	V9SS2T	Ant | *Front*	1379364	**204584243**
Vespa 90 Racer	90	1971	1973	V9SS2T	Ant | *Front*	610290M	**204584251**
Vespa 90 Racer	90	1971	1973	V9SS2T	Ant | *Front*	610290M	**204584252**
Vespa 90 Racer	90	1971	1973	V9SS2T	Ant | *Front*	610290M	**204585072**
Vespa 90 Racer	90	1971	1973	V9SS2T	Ant | *Front*	610290M	**204585092**
Vespa SS 90	90	1965	1971	V9SS1T	Post | *Rear*	610287M	**204550292**



AMMORTIZZATORI

SHOCK ABSORBERS

Modello *Model*	**CC**	**Da** *From*	**A** *To*	**Telaio** *Frame*	**Anteriore/Posteriore** *Front/Rear*	**OEM**	**Codice RMS** *RMS Code*
Vespa SS 90	90	1965	1971	V9SS1T	Post | *Rear*	610287M	**204550872**
Vespa SS 90	90	1965	1971	V9SS1T	Post | *Rear*	2466204	**204560182**
Vespa SS 90	90	1965	1971	V9SS1T	Post | *Rear*	494783	**204560191**
Vespa SS 90	90	1965	1971	V9SS1T	Post | *Rear*	494783	**204560192**
Vespa SS 90	90	1965	1971	V9SS1T	Post | *Rear*	494783	**204560193**
Vespa SS 90	90	1965	1971	V9SS1T	Ant | *Front*	1379364	**204584242**
Vespa SS 90	90	1965	1971	V9SS1T	Ant | *Front*	1379364	**204584243**
Vespa SS 90	90	1965	1971	V9SS1T	Ant | *Front*	610290M	**204584251**
Vespa SS 90	90	1965	1971	V9SS1T	Ant | *Front*	610290M	**204584252**
Vespa SS 90	90	1965	1971	V9SS1T	Ant | *Front*	610290M	**204585072**
Vespa SS 90	90	1965	1971	V9SS1T	Ant | *Front*	610290M	**204585092**
Vespa Pk 100 S	100	1982	1982	V9X1T	Post | *Rear*	266403	**204550382**
Vespa Pk 100 S	100	1982	1982	V9X1T	Post | *Rear*	266403	**204560201**
Vespa Pk 100 S	100	1982	1982	V9X1T	Post | *Rear*	266403	**204560202**
Vespa Pk 100 S	100	1982	1982	V9X1T	Post | *Rear*	2664264	**204560212**
Vespa Pk 100 S Elestart	100	1983	1983	V9X1T	Post | *Rear*	266403	**204550382**
Vespa Pk 100 S Elestart	100	1983	1983	V9X1T	Post | *Rear*	266403	**204560201**
Vespa Pk 100 S Elestart	100	1983	1983	V9X1T	Post | *Rear*	266403	**204560202**
Vespa Pk 100 S Elestart	100	1983	1983	V9X1T	Post | *Rear*	2664264	**204560212**
Vespa Pk 100 XL	100	1986	1986	V9X2T	Post | *Rear*	266403	**204550382**
Vespa Pk 100 XL	100	1986	1986	V9X2T	Post | *Rear*	266403	**204560201**
Vespa Pk 100 XL	100	1986	1986	V9X2T	Post | *Rear*	266403	**204560202**
Vespa Pk 100 XL	100	1986	1986	V9X2T	Post | *Rear*	2664264	**204560212**
Cosa 1 125	125	1988	1991	VNR1T	Post | *Rear*	2681414	**204550892**
Cosa 1 125	125	1988	1991	VNR1T	Ant | *Front*	2679244	**204585102**
Cosa 1 125 Elestart	125	1988	1988	VNR1T	Post | *Rear*	2681414	**204550892**
Cosa 1 125 Elestart	125	1988	1988	VNR1T	Ant | *Front*	2679244	**204585102**
Cosa 2 125	125	1991	1997	VNR1	Post | *Rear*	2681414	**204550892**
Cosa 2 125	125	1991	1997	VNR1	Ant | *Front*	2679244	**204585102**
Vespa 125	125	1958	1958	VNA1T	Post | *Rear*	83816	**204560242**
Vespa 125	125	1958	1958	VNA1T	Ant | *Front*	1375714001	**204585062**
Vespa 125	125	1958	1959	VNA2T	Ant | *Front*	1375714001	**204585062**
Vespa 125	125	1960	1960	VNB1T	Post | *Rear*	83816	**204560242**
Vespa 125	125	1961	1961	VNB2T	Post | *Rear*	83816	**204560242**
Vespa 125	125	1963	1963	VNB4T	Post | *Rear*	83816	**204560242**
Vespa 125	125	1963	1963	VNB4T	Ant | *Front*	1375714001	**204585062**
Vespa 125	125	1964	1964	VNB5T	Post | *Rear*	83816	**204560242**
Vespa 125	125	1965	1966	VNB6T	Ant | *Front*	1375714001	**204585062**
Vespa 125 FI	125	1989	1989	VMX7	Post | *Rear*	266403	**204550382**
Vespa 125 FI	125	1989	1989	VMX7	Post | *Rear*	266403	**204560201**
Vespa 125 FI	125	1989	1989	VMX7	Post | *Rear*	266403	**204560202**
Vespa 125 FI	125	1989	1989	VMX7	Post | *Rear*	2664264	**204560212**
Vespa ET3 125	125	1976	1983	VMB1T	Post | *Rear*	610287M	**204550292**
Vespa ET3 125	125	1976	1983	VMB1T	Post | *Rear*	610287M	**204550872**
Vespa ET3 125	125	1976	1983	VMB1T	Post | *Rear*	2466204	**204560182**
Vespa ET3 125	125	1976	1983	VMB1T	Post | *Rear*	494783	**204560191**
Vespa ET3 125	125	1976	1983	VMB1T	Post | *Rear*	494783	**204560192**
Vespa ET3 125	125	1976	1983	VMB1T	Post | *Rear*	494783	**204560193**
Vespa ET3 125	125	1976	1983	VMB1T	Ant | *Front*	610290M	**204584251**
Vespa ET3 125	125	1976	1983	VMB1T	Ant | *Front*	610290M	**204584252**
Vespa ET3 125	125	1976	1983	VMB1T	Ant | *Front*	610290M	**204585072**
Vespa ET3 125	125	1976	1983	VMB1T	Ant | *Front*	1379364	**204585082**
Vespa ET3 125	125	1976	1983	VMB1T	Ant | *Front*	610290M	**204585092**
Vespa Gt 125	125	1966	1973	VNL2T	Post | *Rear*	610287M	**204550292**
Vespa Gt 125	125	1966	1973	VNL2T	Post | *Rear*	610287M	**204550872**
Vespa Gt 125	125	1966	1973	VNL2T	Post | *Rear*	2466204	**204560182**
Vespa Gt 125	125	1966	1973	VNL2T	Post | *Rear*	494783	**204560191**
Vespa Gt 125	125	1966	1973	VNL2T	Post | *Rear*	494783	**204560192**



Modello *Model*	CC	Da *From*	A *To*	Telaio *Frame*	Anteriore/Posteriore *Front/Rear*	OEM	Codice RMS *RMS Code*
Vespa Gt 125	125	1966	1973	VNL2T	Post | *Rear*	494783	**204560193**
Vespa Gt 125	125	1966	1973	VNL2T	Ant | *Front*	1375714	**204584272**
Vespa Gt 125	125	1966	1973	VNL2T	Ant | *Front*	1375714001	**204585062**
Vespa Gtr 125	125	1969	1978	VNL2T	Post | *Rear*	610287M	**204550292**
Vespa Gtr 125	125	1969	1978	VNL2T	Post | *Rear*	610287M	**204550872**
Vespa Gtr 125	125	1969	1978	VNL2T	Post | *Rear*	2466204	**204560182**
Vespa Gtr 125	125	1969	1978	VNL2T	Post | *Rear*	494783	**204560191**
Vespa Gtr 125	125	1969	1978	VNL2T	Post | *Rear*	494783	**204560192**
Vespa Gtr 125	125	1969	1978	VNL2T	Post | *Rear*	494783	**204560193**
Vespa Nuova 125	125	1965	1967	VMA1T	Post | *Rear*	610287M	**204550292**
Vespa Nuova 125	125	1965	1967	VMA1T	Post | *Rear*	610287M	**204550872**
Vespa Nuova 125	125	1965	1967	VMA1T	Post | *Rear*	2466204	**204560182**
Vespa Nuova 125	125	1965	1967	VMA1T	Post | *Rear*	494783	**204560191**
Vespa Nuova 125	125	1965	1967	VMA1T	Post | *Rear*	494783	**204560192**
Vespa Nuova 125	125	1965	1967	VMA1T	Post | *Rear*	494783	**204560193**
Vespa Nuova 125	125	1965	1967	VMA1T	Ant | *Front*	1379364	**204584242**
Vespa Nuova 125	125	1965	1967	VMA1T	Ant | *Front*	1379364	**204584243**
Vespa Nuova 125	125	1965	1967	VMA1T	Ant | *Front*	610290M	**204584251**
Vespa Nuova 125	125	1965	1967	VMA1T	Ant | *Front*	610290M	**204584252**
Vespa Nuova 125	125	1965	1967	VMA1T	Ant | *Front*	610290M	**204585072**
Vespa Nuova 125	125	1965	1967	VMA1T	Ant | *Front*	610290M	**204585092**
Vespa P 125 E	125	1981	1981	VNX2T	Ant | *Front*	56187R	**204584292**
Vespa P 125 E	125	1981	1981	VNX2T	Ant | *Front*	56187R	**204584312**
Vespa P 125 E	125	1981	1981	VNX2T	Ant | *Front*	2329284	**204584402**
Vespa P 125 E	125	1981	1981	VNX2T	Ant | *Front*	56187R	**204584412**
Vespa P 125 X	125	1977	1982	VNX1T	Post | *Rear*	610287M	**204550292**
Vespa P 125 X	125	1977	1982	VNX1T	Post | *Rear*	610287M	**204550872**
Vespa P 125 X	125	1977	1982	VNX1T	Post | *Rear*	2466204	**204560182**
Vespa P 125 X	125	1977	1982	VNX1T	Post | *Rear*	494783	**204560191**
Vespa P 125 X	125	1977	1982	VNX1T	Post | *Rear*	494783	**204560192**
Vespa P 125 X	125	1977	1982	VNX1T	Post | *Rear*	494783	**204560193**
Vespa P 125 X	125	1977	1982	VNX1T	Ant | *Front*	56187R	**204584292**
Vespa P 125 X	125	1977	1982	VNX1T	Ant | *Front*	56187R	**204584312**
Vespa P 125 X	125	1977	1982	VNX1T	Ant | *Front*	56187R	**204584412**
Vespa Pk 125	125	1982	1982	VMX1T	Post | *Rear*	266403	**204550382**
Vespa Pk 125	125	1982	1982	VMX1T	Post | *Rear*	266403	**204560201**
Vespa Pk 125	125	1982	1982	VMX1T	Post | *Rear*	266403	**204560202**
Vespa Pk 125	125	1982	1982	VMX1T	Post | *Rear*	2664264	**204560212**
Vespa Pk 125 Ets	125	1984	1984	VMS1T	Post | *Rear*	266403	**204550382**
Vespa Pk 125 Ets	125	1984	1984	VMS1T	Post | *Rear*	266403	**204560201**
Vespa Pk 125 Ets	125	1984	1984	VMS1T	Post | *Rear*	266403	**204560202**
Vespa Pk 125 Ets	125	1984	1984	VMS1T	Post | *Rear*	2664264	**204560212**
Vespa Pk 125 Ets Elestart	125	1984	1984	VMS1T	Post | *Rear*	266403	**204550382**
Vespa Pk 125 Ets Elestart	125	1984	1984	VMS1T	Post | *Rear*	266403	**204560201**
Vespa Pk 125 Ets Elestart	125	1984	1984	VMS1T	Post | *Rear*	266403	**204560202**
Vespa Pk 125 Ets Elestart	125	1984	1984	VMS1T	Post | *Rear*	2664264	**204560212**
Vespa Pk 125 S	125	1982	1982	VMX5T	Post | *Rear*	266403	**204550382**
Vespa Pk 125 S	125	1982	1982	VMX5T	Post | *Rear*	266403	**204560201**
Vespa Pk 125 S	125	1982	1982	VMX5T	Post | *Rear*	266403	**204560202**
Vespa Pk 125 S	125	1982	1982	VMX5T	Post | *Rear*	2664264	**204560212**
Vespa Pk 125 S Automatica Elestart	125	1985	1985	VVM1T	Post | *Rear*	266403	**204550382**
Vespa Pk 125 S Automatica Elestart	125	1985	1985	VVM1T	Post | *Rear*	266403	**204560201**
Vespa Pk 125 S Automatica Elestart	125	1985	1985	VVM1T	Post | *Rear*	266403	**204560202**
Vespa Pk 125 S Elestart	125	1983	1983	VMX5T	Post | *Rear*	266403	**204550382**
Vespa Pk 125 S Elestart	125	1983	1983	VMX5T	Post | *Rear*	266403	**204560201**
Vespa Pk 125 S Elestart	125	1983	1983	VMX5T	Post | *Rear*	266403	**204560202**
Vespa Pk 125 XL	125	1986	1986	VMX6T	Post | *Rear*	266403	**204550382**
Vespa Pk 125 XL	125	1986	1986	VMX6T	Post | *Rear*	266403	**204560201**



AMMORTIZZATORI

SHOCK ABSORBERS

Modello *Model*	**CC**	**Da** *From*	**A** *To*	**Telaio** *Frame*	**Anteriore/Posteriore** *Front/Rear*	**OEM**	**Codice RMS** *RMS Code*
Vespa Pk 125 XL	125	1986	1986	VMX6T	Post | *Rear*	266403	**204560202**
Vespa Pk 125 XL	125	1986	1986	VMX6T	Post | *Rear*	2664264	**204560212**
Vespa Pk 125 XL	125	1986	1986	VMX6T	Ant | *Front*	2665384	**204584262**
Vespa Pk 125 XL	125	1986	1986	VMX6T	Ant | *Front*	-	**204584302**
Vespa Pk 125 XL Elestart	125	1986	1986	VMX6T	Post | *Rear*	266403	**204550382**
Vespa Pk 125 XL Elestart	125	1986	1986	VMX6T	Post | *Rear*	266403	**204560201**
Vespa Pk 125 XL Elestart	125	1986	1986	VMX6T	Post | *Rear*	266403	**204560202**
Vespa Pk 125 XL Elestart	125	1986	1986	VMX6T	Post | *Rear*	2664264	**204560212**
Vespa Pk 125 XL Elestart	125	1986	1986	VMX6T	Ant | *Front*	2665384	**204584262**
Vespa Pk 125 XL Elestart	125	1986	1986	VMX6T	Ant | *Front*	-	**204584302**
Vespa Pk 125 XL Plurimatic	125	1989	1989	VMX6T	Post | *Rear*	266403	**204550382**
Vespa Pk 125 XL Plurimatic	125	1989	1989	VMX6T	Post | *Rear*	266403	**204560201**
Vespa Pk 125 XL Plurimatic	125	1989	1989	VMX6T	Post | *Rear*	266403	**204560202**
Vespa Pk 125 XL Plurimatic	125	1989	1989	VMX6T	Post | *Rear*	2664264	**204560212**
Vespa Primavera 125	125	1967	1983	VMA2T	Post | *Rear*	610287M	**204550292**
Vespa Primavera 125	125	1967	1983	VMA2T	Post | *Rear*	610287M	**204550872**
Vespa Primavera 125	125	1967	1983	VMA2T	Post | *Rear*	2466204	**204560182**
Vespa Primavera 125	125	1967	1983	VMA2T	Post | *Rear*	494783	**204560191**
Vespa Primavera 125	125	1967	1983	VMA2T	Post | *Rear*	494783	**204560192**
Vespa Primavera 125	125	1967	1983	VMA2T	Post | *Rear*	494783	**204560193**
Vespa Primavera 125	125	1967	1983	VMA2T	Ant | *Front*	1379364	**204584242**
Vespa Primavera 125	125	1967	1983	VMA2T	Ant | *Front*	1379364	**204584243**
Vespa Primavera 125	125	1967	1983	VMA2T	Ant | *Front*	610290M	**204584251**
Vespa Primavera 125	125	1967	1983	VMA2T	Ant | *Front*	610290M	**204584252**
Vespa Primavera 125	125	1967	1983	VMA2T	Ant | *Front*	610290M	**204585072**
Vespa Primavera 125	125	1967	1983	VMA2T	Ant | *Front*	610290M	**204585092**
Vespa Px 125	125	2011	2016	M74100	Post | *Rear*	561882	**204550412**
Vespa Px 125	125	2011	2016	M74100	Post | *Rear*	561882	**204560272**
Vespa Px 125	125	2011	2016	M74100	Ant | *Front*	65187R	**204584332**
Vespa Px 125	125	2011	2016	M74100	Ant | *Front*	65187R	**204585043**
Vespa Px 125 30 anni	125	2007	2008	M09302	Post | *Rear*	561882	**204550412**
Vespa Px 125 30 anni	125	2007	2008	M09302	Post | *Rear*	561882	**204560272**
Vespa Px 125 30 anni	125	2007	2008	M09302	Ant | *Front*	65187R	**204584332**
Vespa Px 125 30 anni	125	2007	2008	M09302	Ant | *Front*	-	**204584342**
Vespa Px 125 30 anni	125	2007	2008	M09302	Ant | *Front*	65187R	**204585043**
Vespa Px 125 E Arcobaleno	125	1983	1983	VNX2T	Ant | *Front*	56187	**204584292**
Vespa Px 125 E Arcobaleno	125	1983	1983	VNX2T	Ant | *Front*	56187R	**204584312**
Vespa Px 125 E Arcobaleno	125	1983	1983	VNX2T	Ant | *Front*	56187R	**204584412**
Vespa Px 125 E Elestart	125	1984	1984	VNX2T	Ant | *Front*	56187R	**204584292**
Vespa Px 125 E Elestart	125	1984	1984	VNX2T	Ant | *Front*	56187R	**204584312**
Vespa Px 125 E Elestart	125	1984	1984	VNX2T	Ant | *Front*	56187R	**204584412**
Vespa PX 125 E Freno a Disco	125	1998	2001	VNX2T	Post | *Rear*	561882	**204550412**
Vespa PX 125 E Freno a Disco	125	1998	2001	VNX2T	Post | *Rear*	561882	**204560272**
Vespa PX 125 E Freno a Disco	125	1998	2001	VNX2T	Ant | *Front*	65187R	**204584332**
Vespa PX 125 E Freno a Disco	125	1998	2001	VNX2T	Ant | *Front*	-	**204584342**
Vespa PX 125 E Freno a Disco	125	1998	2001	VNX2T	Ant | *Front*	65187R	**204585043**
Vespa Px 125 euro 2	125	2007	2008	M09302	Post | *Rear*	561882	**204550412**
Vespa Px 125 euro 2	125	2007	2008	M09302	Post | *Rear*	561882	**204560272**
Vespa Px 125 euro 2	125	2007	2008	M09302	Ant | *Front*	65187R	**204584332**
Vespa Px 125 euro 2	125	2007	2008	M09302	Ant | *Front*	-	**204584342**
Vespa Px 125 euro 2	125	2007	2008	M09302	Ant | *Front*	65187R	**204585043**
Vespa Px 125 T5	125	1985	1985	VNX5T	Ant | *Front*	56187R	**204584292**
Vespa Px 125 T5	125	1985	1985	VNX5T	Ant | *Front*	56187R	**204584312**
Vespa Px 125 T5	125	1985	1985	VNX5T	Ant | *Front*	2329284	**204584402**
Vespa Px 125 T5	125	1985	1985	VNX5T	Ant | *Front*	56187R	**204584412**
Vespa Px 125 T5 Elestart	125	1986	1986	VNX5T	Ant | *Front*	56187R	**204584292**
Vespa Px 125 T5 Elestart	125	1986	1986	VNX5T	Ant | *Front*	56187R	**204584312**
Vespa Px 125 T5 Elestart	125	1986	1986	VNX5T	Ant | *Front*	2329284	**204584402**



Modello *Model*	**CC**	**Da** *From*	**A** *To*	**Telaio** *Frame*	**Anteriore/Posteriore** *Front/Rear*	**OEM**	**Codice RMS** *RMS Code*
Vespa Px 125 T5 Elestart	125	1986	1986	VNX5T	Ant | *Front*	56187R	**204584412**
VESPA PX T5	125	1985	1989	VNX5T	Ant | *Front*	2329284	**204584391**
VESPA PXE ARCOBALENO	125	1981	1997	VNX2\VLX1\VSX1	Ant | *Front*	2329284	**204584391**
VESPA PX T5	125	1985	1989	VNX5T	Ant | *Front*	2329284	**204584392**
VESPA PXE ARCOBALENO	125	1981	1997	VNX2\VLX1\VSX1	Ant | *Front*	2329284	**204584392**
Vespa Super 125	125	1966	1968	VNC1T	Post | *Rear*	610287M	**204550292**
Vespa Super 125	125	1966	1968	VNC1T	Post | *Rear*	610287M	**204550872**
Vespa Super 125	125	1966	1968	VNC1T	Post | *Rear*	2466204	**204560182**
Vespa Super 125	125	1966	1968	VNC1T	Post | *Rear*	494783	**204560191**
Vespa Super 125	125	1966	1968	VNC1T	Post | *Rear*	494783	**204560192**
Vespa Super 125	125	1966	1968	VNC1T	Post | *Rear*	494783	**204560193**
Vespa Super 125	125	1966	1968	VNC1T	Ant | *Front*	1375714	**204584272**
Vespa Super 125	125	1966	1968	VNC1T	Ant | *Front*	1375714001	**204585062**
Vespa Ts 125	125	1975	1978	VNL3T	Post | *Rear*	610287M	**204550292**
Vespa Ts 125	125	1975	1978	VNL3T	Post | *Rear*	610287M	**204550872**
Vespa Ts 125	125	1975	1978	VNL3T	Post | *Rear*	2466204	**204560182**
Vespa Ts 125	125	1975	1978	VNL3T	Post | *Rear*	494783	**204560191**
Vespa Ts 125	125	1975	1978	VNL3T	Post | *Rear*	494783	**204560192**
Vespa Ts 125	125	1975	1978	VNL3T	Post | *Rear*	494783	**204560193**
Vespa Ts 125	125	1975	1978	VNL3T	Ant | *Front*	1375714	**204584272**
Vespa Ts 125	125	1975	1978	VNL3T	Ant | *Front*	1375714001	**204585062**
Cosa 1 150	150	1988	1991	VLR1T	Post | *Rear*	2681414	**204550892**
Cosa 1 150	150	1988	1991	VLR1T	Ant | *Front*	2679244	**204585102**
Cosa 2 150	150	1991	1997	VLR1	Post | *Rear*	2681414	**204550892**
Cosa 2 150	150	1991	1997	VLR1	Ant | *Front*	2679244	**204585102**
Vespa 150	150	1959	1960	VBA1T	Post | *Rear*	83816	**204560242**
Vespa 150	150	1959	1960	VBA1T	Ant | *Front*	1375714001	**204585062**
Vespa 150	150	1961	1962	VBB1T	Post | *Rear*	83816	**204560242**
Vespa 150	150	1961	1962	VBB1T	Ant | *Front*	1375714001	**204585062**
Vespa 150	150	1963	1966	VBB2T	Post | *Rear*	610287M	**204550292**
Vespa 150	150	1963	1966	VBB2T	Post | *Rear*	610287M	**204550872**
Vespa 150	150	1963	1966	VBB2T	Post | *Rear*	2466204	**204560182**
Vespa 150	150	1963	1966	VBB2T	Post | *Rear*	494783	**204560191**
Vespa 150	150	1963	1966	VBB2T	Post | *Rear*	494783	**204560192**
Vespa 150	150	1963	1966	VBB2T	Post | *Rear*	494783	**204560193**
Vespa 150	150	1963	1966	VBB2T	Ant | *Front*	1375714001	**204585062**
Vespa Gl 150	150	1963	1964	VLA1T	Post | *Rear*	610287M	**204550292**
Vespa Gl 150	150	1963	1964	VLA1T	Post | *Rear*	610287M	**204550872**
Vespa Gl 150	150	1963	1964	VLA1T	Post | *Rear*	2466204	**204560182**
Vespa Gl 150	150	1963	1964	VLA1T	Post | *Rear*	494783	**204560191**
Vespa Gl 150	150	1963	1964	VLA1T	Post | *Rear*	494783	**204560192**
Vespa Gl 150	150	1963	1964	VLA1T	Post | *Rear*	494783	**204560193**
Vespa Gl 150	150	1963	1964	VLA1T	Post | *Rear*	83816	**204560242**
Vespa Gl 150	150	1963	1964	VLA1T	Ant | *Front*	1375714001	**204585062**
Vespa GS 150	150	1959	1961	VS51T	Ant | *Front*	1375714001	**204585062**
Vespa P 150 S	150	1978	1984	VBX1T	Post | *Rear*	610287M	**204550292**
Vespa P 150 S	150	1978	1984	VBX1T	Post | *Rear*	610287M	**204550872**
Vespa P 150 S	150	1978	1984	VBX1T	Post | *Rear*	2466204	**204560182**
Vespa P 150 S	150	1978	1984	VBX1T	Post | *Rear*	494783	**204560191**
Vespa P 150 S	150	1978	1984	VBX1T	Post | *Rear*	494783	**204560192**
Vespa P 150 S	150	1978	1984	VBX1T	Post | *Rear*	494783	**204560193**
Vespa P 150 S	150	1978	1984	VBX1T	Ant | *Front*	1375714	**204584272**
Vespa P 150 X	150	1978	1981	VLX1T	Post | *Rear*	610287M	**204550292**
Vespa P 150 X	150	1978	1981	VLX1T	Post | *Rear*	610287M	**204550872**
Vespa P 150 X	150	1978	1981	VLX1T	Post | *Rear*	2466204	**204560182**
Vespa P 150 X	150	1978	1981	VLX1T	Post | *Rear*	494783	**204560191**
Vespa P 150 X	150	1978	1981	VLX1T	Post | *Rear*	494783	**204560192**
Vespa P 150 X	150	1978	1981	VLX1T	Post | *Rear*	494783	**204560193**



AMMORTIZZATORI

SHOCK ABSORBERS

Modello *Model*	**CC**	**Da** *From*	**A** *To*	**Telaio** *Frame*	**Anteriore/Posteriore** *Front/Rear*	**OEM**	**Codice RMS** *RMS Code*
Vespa P 150 X	150	1978	1981	VLX1T	Ant | *Front*	56187R	**204584292**
Vespa P 150 X	150	1978	1981	VLX1T	Ant | *Front*	56187R	**204584312**
Vespa P 150 X	150	1978	1981	VLX1T	Ant | *Front*	56187R	**204584412**
Vespa Px 150	150	2011	2016	M74200	Ant | *Front*	65187R	**204584332**
Vespa Px 150	150	2011	2016	M74200	Ant | *Front*	-	**204584342**
Vespa Px 150	150	2011	2016	M74200	Ant | *Front*	65187R	**204585043**
Vespa Px 150 E	150	1981	1981	VLX1T	Ant | *Front*	56187R	**204584292**
Vespa Px 150 E	150	1981	1981	VLX1T	Ant | *Front*	56187R	**204584312**
Vespa Px 150 E	150	1981	1981	VLX1T	Ant | *Front*	2329284	**204584402**
Vespa Px 150 E	150	1981	1981	VLX1T	Ant | *Front*	56187R	**204584412**
Vespa Px 150 E Arcobaleno	150	1983	1983		Ant | *Front*	56187R	**204584292**
Vespa Px 150 E Arcobaleno	150	1983	1983		Ant | *Front*	56187R	**204584312**
Vespa Px 150 E Arcobaleno	150	1983	1983		Ant | *Front*	56187R	**204584412**
Vespa Px 150 E Elestart	150	1984	1984		Ant | *Front*	56187R	**204584292**
Vespa Px 150 E Elestart	150	1984	1984		Ant | *Front*	56187R	**204584312**
Vespa Px 150 E Elestart	150	1984	1984		Ant | *Front*	56187R	**204584412**
Vespa PX 150 E Freno a Disco	150	1998	2001	VLX1T	Post | *Rear*	561882	**204550412**
Vespa PX 150 E Freno a Disco	150	1998	2001	VLX1T	Post | *Rear*	561882	**204560272**
Vespa PX 150 E Freno a Disco	150	1998	2001	VLX1T	Ant | *Front*	65187R	**204584332**
Vespa PX 150 E Freno a Disco	150	1998	2001	VLX1T	Ant | *Front*	-	**204584342**
Vespa PX 150 E Freno a Disco	150	1998	2001	VLX1T	Ant | *Front*	65187R	**204585043**
Vespa Sprint 150	150	1965	1974	VLB1T	Post | *Rear*	610287M	**204550292**
Vespa Sprint 150	150	1965	1974	VLB1T	Post | *Rear*	610287M	**204550872**
Vespa Sprint 150	150	1965	1974	VLB1T	Post | *Rear*	2466204	**204560182**
Vespa Sprint 150	150	1965	1974	VLB1T	Post | *Rear*	494783	**204560191**
Vespa Sprint 150	150	1965	1974	VLB1T	Post | *Rear*	494783	**204560192**
Vespa Sprint 150	150	1965	1974	VLB1T	Post | *Rear*	494783	**204560193**
Vespa Sprint 150	150	1965	1974	VLB1T	Ant | *Front*	1375714	**204584272**
Vespa Sprint Veloce 150	150	1969	1979	VLB1T	Post | *Rear*	610287M	**204550292**
Vespa Sprint Veloce 150	150	1969	1979	VLB1T	Post | *Rear*	610287M	**204550872**
Vespa Sprint Veloce 150	150	1969	1979	VLB1T	Post | *Rear*	2466204	**204560182**
Vespa Sprint Veloce 150	150	1969	1979	VLB1T	Post | *Rear*	494783	**204560191**
Vespa Sprint Veloce 150	150	1969	1979	VLB1T	Post | *Rear*	494783	**204560192**
Vespa Sprint Veloce 150	150	1969	1979	VLB1T	Post | *Rear*	494783	**204560193**
Vespa Super 150	150	1965	1979	VBC1T	Post | *Rear*	610287M	**204550292**
Vespa Super 150	150	1965	1979	VBC1T	Post | *Rear*	610287M	**204550872**
Vespa Super 150	150	1965	1979	VBC1T	Post | *Rear*	2466204	**204560182**
Vespa Super 150	150	1965	1979	VBC1T	Post | *Rear*	494783	**204560191**
Vespa Super 150	150	1965	1979	VBC1T	Post | *Rear*	494783	**204560192**
Vespa Super 150	150	1965	1979	VBC1T	Post | *Rear*	494783	**204560193**
Vespa Super 150	150	1965	1979	VBC1T	Ant | *Front*	1375714	**204584272**
Vespa Super 150	150	1965	1979	VBC1T	Ant | *Front*	1375714001	**204585062**
Vespa GS 160	160	1962	1964	VSB1T	Post | *Rear*	610287M	**204550292**
Vespa GS 160	160	1962	1964	VSB1T	Post | *Rear*	610287M	**204550872**
Vespa GS 160	160	1962	1964	VSB1T	Post | *Rear*	2466204	**204560182**
Vespa GS 160	160	1962	1964	VSB1T	Post | *Rear*	494783	**204560191**
Vespa GS 160	160	1962	1964	VSB1T	Post | *Rear*	494783	**204560192**
Vespa GS 160	160	1962	1964	VSB1T	Post | *Rear*	494783	**204560193**
Vespa Rally 180	180	1968	1973	VSD1T	Post | *Rear*	610287M	**204550292**
Vespa Rally 180	180	1968	1973	VSD1T	Post | *Rear*	610287M	**204550872**
Vespa Rally 180	180	1968	1973	VSD1T	Post | *Rear*	2466204	**204560182**
Vespa Rally 180	180	1968	1973	VSD1T	Post | *Rear*	494783	**204560191**
Vespa Rally 180	180	1968	1973	VSD1T	Post | *Rear*	494783	**204560192**
Vespa Rally 180	180	1968	1973	VSD1T	Post | *Rear*	494783	**204560193**
Vespa Rally 180	180	1968	1973	VSD1T	Ant | *Front*	1375714	**204584272**
Vespa Rally 180	180	1968	1973	VSD1T	Ant | *Front*	1375714001	**204585062**
Vespa SS 180	180	1965	1968	VSC1T	Post | *Rear*	610287M	**204550292**
Vespa SS 180	180	1965	1968	VSC1T	Post | *Rear*	610287M	**204550872**



Modello *Model*	CC	Da *From*	A *To*	Telaio *Frame*	Anteriore/Posteriore *Front/Rear*	OEM	Codice RMS *RMS Code*
Vespa SS 180	180	1965	1968	VSC1T	Post | *Rear*	2466204	**204560182**
Vespa SS 180	180	1965	1968	VSC1T	Post | *Rear*	494783	**204560191**
Vespa SS 180	180	1965	1968	VSC1T	Post | *Rear*	494783	**204560192**
Vespa SS 180	180	1965	1968	VSC1T	Post | *Rear*	494783	**204560193**
Cosa 1 200	200	1988	1991	VSR1T	Post | *Rear*	2681414	**204550892**
Cosa 1 200	200	1988	1991	VSR1T	Ant | *Front*	2679244	**204585102**
Cosa 2 200	200	1991	1997	VSR1T	Post | *Rear*	2681414	**204550892**
Cosa 2 200	200	1991	1997	VSR1T	Ant | *Front*	2679244	**204585102**
Vespa P 200 X	200	1977	1977	VSX1T	Post | *Rear*	610287M	**204550292**
Vespa P 200 X	200	1977	1977	VSX1T	Post | *Rear*	610287M	**204550872**
Vespa P 200 X	200	1977	1977	VSX1T	Post | *Rear*	2466204	**204560182**
Vespa P 200 X	200	1977	1977	VSX1T	Post | *Rear*	494783	**204560191**
Vespa P 200 X	200	1977	1977	VSX1T	Post | *Rear*	494783	**204560192**
Vespa P 200 X	200	1977	1977	VSX1T	Post | *Rear*	494783	**204560193**
Vespa P 200 X	200	1977	1977	VSX1T	Ant | *Front*	56187R	**204584292**
Vespa PX 200 E	200	1977	1982	VSX1T	Post | *Rear*	610287M	**204550292**
Vespa PX 200 E	200	1977	1982	VSX1T	Post | *Rear*	610287M	**204550872**
Vespa PX 200 E	200	1977	1982	VSX1T	Post | *Rear*	2466204	**204560182**
Vespa PX 200 E	200	1977	1982	VSX1T	Post | *Rear*	494783	**204560191**
Vespa PX 200 E	200	1977	1982	VSX1T	Post | *Rear*	494783	**204560192**
Vespa PX 200 E	200	1977	1982	VSX1T	Post | *Rear*	494783	**204560193**
Vespa PX 200 E	200	1977	1982	VSX1T	Ant | *Front*	56187R	**204584292**
Vespa PX 200 E	200	1977	1982	VSX1T	Ant | *Front*	56187R	**204584312**
Vespa PX 200 E	200	1977	1982	VSX1T	Ant | *Front*	56187R	**204584412**
Vespa PX 200 E	200	1982	1982	VSX1T	Ant | *Front*	56187R	**204584292**
Vespa PX 200 E	200	1982	1982	VSX1T	Ant | *Front*	56187R	**204584312**
Vespa PX 200 E	200	1982	1982	VSX1T	Ant | *Front*	56187R	**204584412**
Vespa PX 200 E Freno a Disco	200	1998	2001	VSX1T	Post | *Rear*	561882	**204550412**
Vespa PX 200 E Freno a Disco	200	1998	2001	VSX1T	Post | *Rear*	561882	**204560272**
Vespa PX 200 E Freno a Disco	200	1998	2001	VSX1T	Ant | *Front*	65187R	**204584332**
Vespa PX 200 E Freno a Disco	200	1998	2001	VSX1T	Ant | *Front*	-	**204584342**
Vespa PX 200 E Freno a Disco	200	1998	2001	VSX1T	Ant | *Front*	65187R	**204585043**
Vespa PX 200 E Arcobaleno	200	1983	1984	VSX1T	Ant | *Front*	56187R	**204584292**
Vespa PX 200 E Arcobaleno	200	1983	1984	VSX1T	Ant | *Front*	56187R	**204584312**
Vespa PX 200 E Arcobaleno	200	1983	1984	VSX1T	Ant | *Front*	56187R	**204584412**
Vespa PX 200 E Elestart	200	1981	1990	VSX1T	Ant | *Front*	56187R	**204584292**
Vespa PX 200 E Elestart	200	1981	1990	VSX1T	Ant | *Front*	56187R	**204584312**
Vespa PX 200 E Elestart	200	1981	1990	VSX1T	Ant | *Front*	2329284	**204584402**
Vespa PX 200 E Elestart	200	1981	1990	VSX1T	Ant | *Front*	56187R	**204584412**
Vespa Rally 200	200	1972	1979	VSE1T	Post | *Rear*	610287M	**204550292**
Vespa Rally 200	200	1972	1979	VSE1T	Post | *Rear*	610287M	**204550872**
Vespa Rally 200	200	1972	1979	VSE1T	Post | *Rear*	2466204	**204560182**
Vespa Rally 200	200	1972	1979	VSE1T	Post | *Rear*	494783	**204560191**
Vespa Rally 200	200	1972	1979	VSE1T	Post | *Rear*	494783	**204560192**
Vespa Rally 200	200	1972	1979	VSE1T	Post | *Rear*	494783	**204560193**
Vespa Rally 200	200	1972	1979	VSE1T	Ant | *Front*	1375714	**204584272**
Vespa Rally 200	200	1972	1979	VSE1T	Ant | *Front*	1375714001	**204585062**
INNOCENTI							
Lambretta 125 DI	125	1969	1971	-	Post | *Rear*	19058100	**204560252**
Lambretta 125 DI	125	1969	1971	-	Post | *Rear*	19058100	**204560292**
Lambretta 125 Li 3 Serie	125	1961	1967	-	Post | *Rear*	19058100	**204560252**
Lambretta 125 Li 3 Serie	125	1961	1967	-	Post | *Rear*	19058100	**204560292**
Lambretta 125 Li 3 Serie	125	1961	1967	-	Ant | *Front*	19060290	**204585123**
Lambretta 125 Li 3 Serie	125	1961	1967	-	Ant | *Front*	-	**204585133**
Lambretta 125 Li Special	125	1966	1968	-	Post | *Rear*	19058100	**204560252**
Lambretta 125 Li Special	125	1966	1968	-	Post | *Rear*	19058100	**204560292**
Lambretta 150 DI	150	1969	1971	-	Post | *Rear*	19058100	**204560252**
Lambretta 150 DI	150	1969	1971	-	Post | *Rear*	19058100	**204560292**



Modello *Model*	**CC**	**Da** *From*	**A** *To*	**Telaio** *Frame*	**Anteriore/Posteriore** *Front/Rear*	**OEM**	**Codice RMS** *RMS Code*
Lambretta 150 Li 2 Serie	150	1960	1960	-	Post | *Rear*	19058120	**204560262**
Lambretta 150 Li 3 Serie	150	1962	1967	-	Post | *Rear*	19058100	**204560252**
Lambretta 150 Li 3 Serie	150	1962	1967	-	Post | *Rear*	19058100	**204560292**
Lambretta 150 Li 3 Serie	150	1962	1967	-	Ant | *Front*	19060290	**204585123**
Lambretta 150 Li 3 Serie	150	1962	1967	-	Ant | *Front*	-	**204585133**
Lambretta 150 Li Special Sx	150	1966	1968	-	Post | *Rear*	19058100	**204560252**
Lambretta 150 Li Special Sx	150	1966	1968	-	Post | *Rear*	19058100	**204560292**
Lambretta 200 DI	200	1969	1971	-	Post | *Rear*	19058100	**204560252**
Lambretta 200 DI	200	1969	1971	-	Post | *Rear*	19058100	**204560292**
Lambretta 200 Li Special Sx	200	1966	1968	-	Post | *Rear*	19058100	**204560252**
Lambretta 200 Li Special Sx	200	1966	1968	-	Post | *Rear*	19058100	**204560292**
Lambretta 200 Li Special Sx	200	1966	1968	-	Ant | *Front*	19060290	**204585123**
Lambretta 200 Li Special Sx	200	1966	1968	-	Ant | *Front*	-	**204585133**



204550292



LUNGHEZZA *LENGHT*	ATTACCO SUPERIORE *UPPER FASTENING POINT*			ATTACCO INFERIORE *LOWER FASTENING POINT*		
(mm)	TIPO - *TYPE*	D (mm)	W (mm)	TIPO - *TYPE*	D (mm)	W (mm)
348		M9x1,25	16		9,6	47

204550382



LUNGHEZZA *LENGHT*	ATTACCO SUPERIORE *UPPER FASTENING POINT*			ATTACCO INFERIORE *LOWER FASTENING POINT*		
(mm)	TIPO - *TYPE*	D (mm)	W (mm)	TIPO - *TYPE*	D (mm)	W (mm)
353		M9x1,25	24		9,6	47

204550412



LUNGHEZZA *LENGHT*	ATTACCO SUPERIORE *UPPER FASTENING POINT*			ATTACCO INFERIORE *LOWER FASTENING POINT*		
(mm)	TIPO - *TYPE*	D (mm)	W (mm)	TIPO - *TYPE*	D (mm)	W (mm)
391		M9x1,25	16		9,6	47

204550872



LUNGHEZZA *LENGHT*	ATTACCO SUPERIORE *UPPER FASTENING POINT*			ATTACCO INFERIORE *LOWER FASTENING POINT*		
(mm)	TIPO - *TYPE*	D (mm)	W (mm)	TIPO - *TYPE*	D (mm)	W (mm)
348		M9x1,25	16		9,6	47

204550892



LUNGHEZZA *LENGHT*	ATTACCO SUPERIORE *UPPER FASTENING POINT*			ATTACCO INFERIORE *LOWER FASTENING POINT*		
(mm)	TIPO - *TYPE*	D (mm)	W (mm)	TIPO - *TYPE*	D (mm)	W (mm)
453		M9x1,25	22		10	50



AMMORTIZZATORI

SHOCK ABSORBERS

204560182



LUNGHEZZA *LENGHT*	ATTACCO SUPERIORE *UPPER FASTENING POINT*			ATTACCO INFERIORE *LOWER FASTENING POINT*		
(mm)	TIPO - *TYPE*	D (mm)	W (mm)	TIPO - *TYPE*	D (mm)	W (mm)
348		M9x1,25	16		9,6	47

204560191



LUNGHEZZA *LENGHT*	ATTACCO SUPERIORE *UPPER FASTENING POINT*			ATTACCO INFERIORE *LOWER FASTENING POINT*		
(mm)	TIPO - *TYPE*	D (mm)	W (mm)	TIPO - *TYPE*	D (mm)	W (mm)
344		M9x1,25	16		9,8	47

204560192



LUNGHEZZA *LENGHT*	ATTACCO SUPERIORE *UPPER FASTENING POINT*			ATTACCO INFERIORE *LOWER FASTENING POINT*		
(mm)	TIPO - *TYPE*	D (mm)	W (mm)	TIPO - *TYPE*	D (mm)	W (mm)
344		M9x1,25	16		9,6	47

204560193



LUNGHEZZA *LENGHT*	ATTACCO SUPERIORE *UPPER FASTENING POINT*			ATTACCO INFERIORE *LOWER FASTENING POINT*		
(mm)	TIPO - *TYPE*	D (mm)	W (mm)	TIPO - *TYPE*	D (mm)	W (mm)
344		M9x1,25	16		9,6	47

204560201



LUNGHEZZA *LENGHT*	ATTACCO SUPERIORE *UPPER FASTENING POINT*			ATTACCO INFERIORE *LOWER FASTENING POINT*		
(mm)	TIPO - *TYPE*	D (mm)	W (mm)	TIPO - *TYPE*	D (mm)	W (mm)
348		M8x1,0	30		9,6	47



204560202



LUNGHEZZA *LENGHT*	ATTACCO SUPERIORE *UPPER FASTENING POINT*			ATTACCO INFERIORE *LOWER FASTENING POINT*		
(mm)	TIPO - *TYPE*	D (mm)	W (mm)	TIPO - *TYPE*	D (mm)	W (mm)
348		M8x1,0	30		9,6	47

204560212



LUNGHEZZA *LENGHT*	ATTACCO SUPERIORE *UPPER FASTENING POINT*			ATTACCO INFERIORE *LOWER FASTENING POINT*		
(mm)	TIPO - *TYPE*	D (mm)	W (mm)	TIPO - *TYPE*	D (mm)	W (mm)
348		M8x1,0	30		9,6	47

204560242



LUNGHEZZA *LENGHT*	ATTACCO SUPERIORE *UPPER FASTENING POINT*			ATTACCO INFERIORE *LOWER FASTENING POINT*		
(mm)	TIPO - *TYPE*	D (mm)	W (mm)	TIPO - *TYPE*	D (mm)	W (mm)
355		M9x1,25	16		9,2	45

204560252



LUNGHEZZA *LENGHT*	ATTACCO SUPERIORE *UPPER FASTENING POINT*			ATTACCO INFERIORE *LOWER FASTENING POINT*		
(mm)	TIPO - *TYPE*	D (mm)	W (mm)	TIPO - *TYPE*	D (mm)	W (mm)
305		18	33		18	33

204560262



LUNGHEZZA *LENGHT*	ATTACCO SUPERIORE *UPPER FASTENING POINT*			ATTACCO INFERIORE *LOWER FASTENING POINT*		
(mm)	TIPO - *TYPE*	D (mm)	W (mm)	TIPO - *TYPE*	D (mm)	W (mm)
317		18	33		18	33



AMMORTIZZATORI

SHOCK ABSORBERS

204560272



LUNGHEZZA *LENGHT*	ATTACCO SUPERIORE *UPPER FASTENING POINT*			ATTACCO INFERIORE *LOWER FASTENING POINT*		
(mm)	TIPO - *TYPE*	D (mm)	W (mm)	TIPO - *TYPE*	D (mm)	W (mm)
391		M9x1,25	16		9,6	47

204560282



LUNGHEZZA *LENGHT*	ATTACCO SUPERIORE *UPPER FASTENING POINT*			ATTACCO INFERIORE *LOWER FASTENING POINT*		
(mm)	TIPO - *TYPE*	D (mm)	W (mm)	TIPO - *TYPE*	D (mm)	W (mm)
344		M9x1,25	16		9,6	47

204560292



LUNGHEZZA *LENGHT*	ATTACCO SUPERIORE *UPPER FASTENING POINT*			ATTACCO INFERIORE *LOWER FASTENING POINT*		
(mm)	TIPO - *TYPE*	D (mm)	W (mm)	TIPO - *TYPE*	D (mm)	W (mm)
305		18	33		18	33

204584242



LUNGHEZZA *LENGHT*	ATTACCO SUPERIORE *UPPER FASTENING POINT*			ATTACCO INFERIORE *LOWER FASTENING POINT*		
(mm)	TIPO - *TYPE*	D (mm)	W (mm)	TIPO - *TYPE*	D (mm)	W (mm)
217		M8x1,0	25		14,1	40

204584243



LUNGHEZZA *LENGHT*	ATTACCO SUPERIORE *UPPER FASTENING POINT*			ATTACCO INFERIORE *LOWER FASTENING POINT*		
(mm)	TIPO - *TYPE*	D (mm)	W (mm)	TIPO - *TYPE*	D (mm)	W (mm)
217		M8x1,0	25		14,1	40



204584251



LUNGHEZZA *LENGHT*	ATTACCO SUPERIORE *UPPER FASTENING POINT*			ATTACCO INFERIORE *LOWER FASTENING POINT*		
(mm)	TIPO - *TYPE*	D (mm)	W (mm)	TIPO - *TYPE*	D (mm)	W (mm)
215		M8x1,0	30		14,1	40

204584252



LUNGHEZZA *LENGHT*	ATTACCO SUPERIORE *UPPER FASTENING POINT*			ATTACCO INFERIORE *LOWER FASTENING POINT*		
(mm)	TIPO - *TYPE*	D (mm)	W (mm)	TIPO - *TYPE*	D (mm)	W (mm)
215		M8x1,0	30		14,1	40

204584262



LUNGHEZZA *LENGHT*	ATTACCO SUPERIORE *UPPER FASTENING POINT*			ATTACCO INFERIORE *LOWER FASTENING POINT*		
(mm)	TIPO - *TYPE*	D (mm)	W (mm)	TIPO - *TYPE*	D (mm)	W (mm)
253		M10x1,25	17		M8x1,25	35

204584272



LUNGHEZZA *LENGHT*	ATTACCO SUPERIORE *UPPER FASTENING POINT*			ATTACCO INFERIORE *LOWER FASTENING POINT*		
(mm)	TIPO - *TYPE*	D (mm)	W (mm)	TIPO - *TYPE*	D (mm)	W (mm)
212		11,2	20		11,2	26

204584292



LUNGHEZZA *LENGHT*	ATTACCO SUPERIORE *UPPER FASTENING POINT*			ATTACCO INFERIORE *LOWER FASTENING POINT*		
(mm)	TIPO - *TYPE*	D (mm)	W (mm)	TIPO - *TYPE*	D (mm)	W (mm)
310		M10x1,25	14		8,1	38



AMMORTIZZATORI

SHOCK ABSORBERS

204584302



LUNGHEZZA *LENGHT*	ATTACCO SUPERIORE *UPPER FASTENING POINT*			ATTACCO INFERIORE *LOWER FASTENING POINT*		
(mm)	TIPO - *TYPE*	D (mm)	W (mm)	TIPO - *TYPE*	D (mm)	W (mm)
253		M10x1,25	17		M8x1,25	35

204584312



LUNGHEZZA *LENGHT*	ATTACCO SUPERIORE *UPPER FASTENING POINT*			ATTACCO INFERIORE *LOWER FASTENING POINT*		
(mm)	TIPO - *TYPE*	D (mm)	W (mm)	TIPO - *TYPE*	D (mm)	W (mm)
310		M10x1,25	14		8,1	38

204584332



LUNGHEZZA *LENGHT*	ATTACCO SUPERIORE *UPPER FASTENING POINT*			ATTACCO INFERIORE *LOWER FASTENING POINT*		
(mm)	TIPO - *TYPE*	D (mm)	W (mm)	TIPO - *TYPE*	D (mm)	W (mm)
310		M10x1,25	14		8,1	38

204584342



LUNGHEZZA *LENGHT*	ATTACCO SUPERIORE *UPPER FASTENING POINT*			ATTACCO INFERIORE *LOWER FASTENING POINT*		
(mm)	TIPO - *TYPE*	D (mm)	W (mm)	TIPO - *TYPE*	D (mm)	W (mm)
310		M10x1,25	14		M8x1,25	38

204584362



LUNGHEZZA *LENGHT*	ATTACCO SUPERIORE *UPPER FASTENING POINT*			ATTACCO INFERIORE *LOWER FASTENING POINT*		
(mm)	TIPO - *TYPE*	D (mm)	W (mm)	TIPO - *TYPE*	D (mm)	W (mm)
214		M8x1,0	16		14,1	40



204584391



LUNGHEZZA *LENGHT*	ATTACCO SUPERIORE *UPPER FASTENING POINT*			ATTACCO INFERIORE *LOWER FASTENING POINT*		
(mm)	TIPO - *TYPE*	D (mm)	W (mm)	TIPO - *TYPE*	D (mm)	W (mm)
310		M10x1,25	12,5		8,5	38

204584392



LUNGHEZZA *LENGHT*	ATTACCO SUPERIORE *UPPER FASTENING POINT*			ATTACCO INFERIORE *LOWER FASTENING POINT*		
(mm)	TIPO - *TYPE*	D (mm)	W (mm)	TIPO - *TYPE*	D (mm)	W (mm)
310		M10x1,25	12,5		8,5	38

204584402



LUNGHEZZA *LENGHT*	ATTACCO SUPERIORE *UPPER FASTENING POINT*			ATTACCO INFERIORE *LOWER FASTENING POINT*		
(mm)	TIPO - *TYPE*	D (mm)	W (mm)	TIPO - *TYPE*	D (mm)	W (mm)
310		M10x1,25	14		8,1	38

204584412



LUNGHEZZA *LENGHT*	ATTACCO SUPERIORE *UPPER FASTENING POINT*			ATTACCO INFERIORE *LOWER FASTENING POINT*		
(mm)	TIPO - *TYPE*	D (mm)	W (mm)	TIPO - *TYPE*	D (mm)	W (mm)
310		M10x1,25	14		8,1	38

204585043



LUNGHEZZA *LENGHT*	ATTACCO SUPERIORE *UPPER FASTENING POINT*			ATTACCO INFERIORE *LOWER FASTENING POINT*		
(mm)	TIPO - *TYPE*	D (mm)	W (mm)	TIPO - *TYPE*	D (mm)	W (mm)
310		M10x1,25	12,5		8,5	38

204585062



LUNGHEZZA *LENGHT*	ATTACCO SUPERIORE *UPPER FASTENING POINT*			ATTACCO INFERIORE *LOWER FASTENING POINT*		
(mm)	TIPO - *TYPE*	D (mm)	W (mm)	TIPO - *TYPE*	D (mm)	W (mm)
212		11,2	20		11,2	26

204585072



LUNGHEZZA *LENGHT*	ATTACCO SUPERIORE *UPPER FASTENING POINT*			ATTACCO INFERIORE *LOWER FASTENING POINT*		
(mm)	TIPO - *TYPE*	D (mm)	W (mm)	TIPO - *TYPE*	D (mm)	W (mm)
217		M8x1,0	16		14,1	40

204585082



LUNGHEZZA *LENGHT*	ATTACCO SUPERIORE *UPPER FASTENING POINT*			ATTACCO INFERIORE *LOWER FASTENING POINT*		
(mm)	TIPO - *TYPE*	D (mm)	W (mm)	TIPO - *TYPE*	D (mm)	W (mm)
220		M8x1,0	14		14	40

204585092



LUNGHEZZA *LENGHT*	ATTACCO SUPERIORE *UPPER FASTENING POINT*			ATTACCO INFERIORE *LOWER FASTENING POINT*		
(mm)	TIPO - *TYPE*	D (mm)	W (mm)	TIPO - *TYPE*	D (mm)	W (mm)
220		M8x1,0	14		14	40

204585102



LUNGHEZZA *LENGHT*	ATTACCO SUPERIORE *UPPER FASTENING POINT*			ATTACCO INFERIORE *LOWER FASTENING POINT*		
(mm)	TIPO - *TYPE*	D (mm)	W (mm)	TIPO - *TYPE*	D (mm)	W (mm)
312		M10x1,25	12		8	38



204585123



LUNGHEZZA *LENGHT*	ATTACCO SUPERIORE *UPPER FASTENING POINT*			ATTACCO INFERIORE *LOWER FASTENING POINT*		
(mm)	TIPO - *TYPE*	D (mm)	W (mm)	TIPO - *TYPE*	D (mm)	W (mm)
237		6	22,2		6	22,2

204585133



LUNGHEZZA *LENGHT*	ATTACCO SUPERIORE *UPPER FASTENING POINT*			ATTACCO INFERIORE *LOWER FASTENING POINT*		
(mm)	TIPO - *TYPE*	D (mm)	W (mm)	TIPO - *TYPE*	D (mm)	W (mm)
237		6	22,2		6	22,2

LEGENDA ICONE - *KEY ICONS*							
							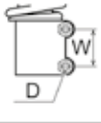
Posteriore *Rear*	Anteriore *Front*	Precarico molla a camma *Step spring preload*	Precarico molla con ghiera filettata *Threaded spring preload*	Attacco ad occhiello *End eye fastening point*	Attacco a forchetta *Fork fastening point*	Attacco con perno *Stud fastening point*	Attacco con doppia vite *Two bolts fastening point*



AMMORTIZZATORI PIAGGIO APE - *PIAGGIO APE SHOCK ABSORBERS*

Modello *Model*	**CC**	**Da** *From*	**A** *To*	**Telaio** *Frame*	**Anteriore/Posteriore** *Front/Rear*	**OEM**	**Codice RMS** *RMS Code*
PIAGGIO							
APE	50	2009	2016	C8000	Post | *Rear*	646464	**204565002**
APE	50	2009	2016	C8000	Ant | *Front*	646463	**204585002**
APE FL - FL2	50	1989	1995	TL6T	Post | *Rear*	2682514	**204565002**
APE FL - FL2	50	1989	1995	TL6T	Ant | *Front*	566502	**204585002**
APE FL3 EUROPA	50	1996	1999	TL5T	Post | *Rear*	2682514	**204565002**
APE FL3 EUROPA	50	1996	1999	TL5T	Ant | *Front*	566502	**204585002**
APE MIX 2T	50	1998	2008	C8000	Post | *Rear*	56597R	**204565002**
APE MIX 2T	50	1998	2008	C8000	Ant | *Front*	646463	**204585002**
APE P	50	1980	1985	TL3T	Post | *Rear*	2682514	**204565002**
APE P	50	1980	1985	TL3T	Ant | *Front*	566502	**204585002**
APE RST MIX	50	1999	2003	C8000	Post | *Rear*	2682514	**204565002**
APE RST MIX	50	1999	2003	C8000	Ant | *Front*	566502	**204585002**
APE TM P	50	1985	1989	TL4T	Post | *Rear*	2682514	**204565002**
APE TM P	50	1985	1989	TL4T	Ant | *Front*	566502	**204585002**
APE CALESSINO (CITY)	200	2013	2016	T42PMC	Ant | *Front*	1364514	**204585012**
APE CAR P2-P3	220	1978	1985	AF3T	Post | *Rear*	566504	**204565012**
APE CAR P2-P3	220	1978	1985	AF3T	Ant | *Front*	1364514	**204585012**
APE MP P501-P601	220	1978	1996	MPR2-M2-V2	Ant | *Front*	1364514	**204585012**
APE MP P501-P601	220	1978	1996	MPR2-M2-V2	Ant | *Front*	244949	**204585022**
APE TM	220	2009	2016	T10000	Ant | *Front*	646465	**204585042**
APE TM P602	220	1982	1983	ATM1T	Ant | *Front*	225533	**204585032**
APE TM P703 FL2	220	1999	2007	ATM2T\3T	Ant | *Front*	566506	**204585042**
APE TM P703-P703V, FL2	220	1984	2005	ATM2T\T	Ant | *Front*	646465	**204585042**
APE CALESSINO - VME	420	2007	2012	T2D4MC	Ant | *Front*	1364514	**204585012**
APE CAR - MAX DIESEL	420	1986	1996	AFD	Ant | *Front*	566506	**204585042**
APE TM DIESEL LCS	420	2005	2012	T10000	Ant | *Front*	566506	**204585042**
APE TM P703-P703V DIESEL	420	1987	2004	ATD1T	Ant | *Front*	646465	**204585042**



204565002



LUNGHEZZA *LENGHT*	ATTACCO SUPERIORE *UPPER FASTENING POINT*			ATTACCO INFERIORE *LOWER FASTENING POINT*		
(mm)	TIPO - *TYPE*	D (mm)	W (mm)	TIPO - *TYPE*	D (mm)	W (mm)
403		M10x1,25	-		M10x1,25	-

204565012



LUNGHEZZA *LENGHT*	ATTACCO SUPERIORE *UPPER FASTENING POINT*			ATTACCO INFERIORE *LOWER FASTENING POINT*		
(mm)	TIPO - *TYPE*	D (mm)	W (mm)	TIPO - *TYPE*	D (mm)	W (mm)
385		M10x1,25	-		10	40

204585002



LUNGHEZZA *LENGHT*	ATTACCO SUPERIORE *UPPER FASTENING POINT*			ATTACCO INFERIORE *LOWER FASTENING POINT*		
(mm)	TIPO - *TYPE*	D (mm)	W (mm)	TIPO - *TYPE*	D (mm)	W (mm)
368,5		M10x1,25	-		15,1	4

204585012



LUNGHEZZA *LENGHT*	ATTACCO SUPERIORE *UPPER FASTENING POINT*			ATTACCO INFERIORE *LOWER FASTENING POINT*		
(mm)	TIPO - *TYPE*	D (mm)	W (mm)	TIPO - *TYPE*	D (mm)	W (mm)
439		M10x1,25	-		18,1	48

204585022



LUNGHEZZA *LENGHT*	ATTACCO SUPERIORE *UPPER FASTENING POINT*			ATTACCO INFERIORE *LOWER FASTENING POINT*		
(mm)	TIPO - *TYPE*	D (mm)	W (mm)	TIPO - *TYPE*	D (mm)	W (mm)
417		M10x1,25	-		18,1	48

204585032



LUNGHEZZA *LENGHT*	ATTACCO SUPERIORE *UPPER FASTENING POINT*			ATTACCO INFERIORE *LOWER FASTENING POINT*		
(mm)	TIPO - *TYPE*	D (mm)	W (mm)	TIPO - *TYPE*	D (mm)	W (mm)
400		M10x1,25	-		19,1	48

204585042



LUNGHEZZA *LENGHT*	ATTACCO SUPERIORE *UPPER FASTENING POINT*			ATTACCO INFERIORE *LOWER FASTENING POINT*		
(mm)	TIPO - *TYPE*	D (mm)	W (mm)	TIPO - *TYPE*	D (mm)	W (mm)
400		M10x1,25	-		19,1	48

LEGENDA ICONE - *KEY ICONS*

				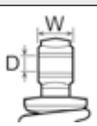		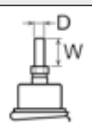	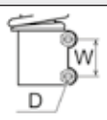
Posteriore *Rear*	Anteriore *Front*	Precarico molla a camma *Step spring preload*	Precarico molla con ghiera filettata *Threaded spring preload*	Attacco ad occhiello *End eye fastening point*	Attacco a forchetta *Fork fastening point*	Attacco con perno *Stud fastening point*	Attacco con doppia vite *Two bolts fastening point*

121830060

TAMPONE AMMORTIZZATORE | *SHOCK ABSORBER RUBBER BUFFER*
Confezione 5 Pz. | *5 Pcs Packing*

PIAGGIO: Vespa (Tutti i modelli - *All models*)
R.O. 060536



121830350

TAMPONEAMMORTIZZATORE POSTERIORE | *REAR SHOCK ABSORBER RUBBER BUFFER*
Confezione 5 Pz. | *5 Pcs Packing*

PIAGGIO 50-125-150-200: Vespa Primavera • Vespa Primavera ET3 • Vespa PX • Vespa PE • Vespa PK (Tutti i modelli - *All models*) • Vespa N • Vespa L • Vespa R • Vespa Sprint • Vespa Super • Vespa Rally • Vespa GT • Vespa TS
R.O. 040316



121830600

TAMPONE AMMORTIZZATORE | *SHOCK ABSORBER BUFFER*
Ø Interno 14 mm | *Ø Internal 14 mm*
Ø Esterno 31 mm | *Ø External 31 mm*
Spessore 9 mm | *Thickness 9 mm*
Confezione 5 Pz. | *5 Pcs Packing*

PIAGGIO 50-90-125: Vespa 50-90 • Vespa Primavera ET3 • Vespa Primavera • Vespa PK (Vari modelli - *Various models*)
R.O. 057012



121830790

TAMPONE AMMORTIZZATORE | *SHOCK ABSORBER BUFFER*
Foro Ø12 mm | *Hole Ø12 mm*
Confezione 5 Pz. | *5 Pcs Packing*

PIAGGIO 50: Vespa 1° Serie
VSA1T



121830800

TAMPONE SUPERIORE AMMORTIZZATORE | *SHOCK ABSORBER BUFFER*
Foro Ø13 mm | *Hole Ø13 mm*
Confezione 5 Pz. | *5 Pcs Packing*

PIAGGIO 50: Vespa 1° Serie



121830810

TAMPONE SUPERIORE AMMORTIZZATORE | *SHOCK ABSORBER BUFFER*
Confezione 5 Pz. | *5 Pcs Packing*

PIAGGIO 125-150-200: Vespa Sprint • Vespa GR • Vespa Super • Vespa Rally
R.O. 015019



121830820

TAMPONE SUPERIORE AMMORTIZZATORE | *SHOCK ABSORBER BUFFER*
Ø Interno 16 mm | *Ø Internal 16 mm*
Ø Esterno 33 mm | *Ø External 33 mm*
Spessore 10 mm | *Thickness 10 mm*
Confezione 5 Pz. | *5 Pcs Packing*

PIAGGIO 125-150-200: Vespa PX • Vespa PE (Tutti i modelli - *All models*)
R.O. 174085



121830833

TAMPONE INFERIORE AMMORTIZZATORE | *LOWER SHOCK ABSORBER BUFFER*
Confezione 5 Pz. | *6 Pcs Packing*

PIAGGIO 150: Vespa 150 GL • Vespa Sprint
VLA-VLB-VBC
R.O. 136554



121870070

PROLUNGA AMMORTIZZATORE | *SHOCK ABSORBERS EXTENSION*
Alluminio | *Alloy*

YAMAHA MINARELLI 50



121870071

PROLUNGA AMMORTIZZATORE | *SHOCK ABSORBERS EXTENSION*
Nero | *Black*

YAMAHA MINARELLI 50



121870090

PROLUNGA AMMORTIZZATORE | *SHOCK ABSORBERS EXTENSION*
Alluminio | *Alloy*

GILERA: Typhoon
PIAGGIO: Nrg



121870102

PROLUNGA AMMORTIZZATORE | *SHOCK ABSORBERS EXTENSION*
Bianco | *White*

MBK: Nitro
YAMAHA: Aerox



121870110

PROLUNGA AMMORTIZZATORE | *SHOCK ABSORBERS EXTENSION*
Cromato | *Chromed*

PEUGEOT: Speedfight



121870111

PROLUNGA AMMORTIZZATORE | *SHOCK ABSORBERS EXTENSION*
Nero | *Black*

PEUGEOT: Speedfight



121870118

PROLUNGA AMMORTIZZATORE | *SHOCK ABSORBERS EXTENSION*
Carbon

PEUGEOT: Speedfight



121870120

PROLUNGA AMMORTIZZATORE POSTERIORE | *REAR SHOCK ABSORBERS EXTENSION*
Lunghezza 42 mm | *Lenght 42 mm*
Confezione 5 Pz. | *5 Pcs Packing*

PIAGGIO 125-150: Vespa Super



121870130

PROLUNGA AMMORTIZZATORE POSTERIORE | *REAR SHOCK ABSORBERS EXTENSION*
Lunghezza 26 mm | *Lenght 26 mm*
Confezione 5 Pz. | *5 Pcs Packing*

PIAGGIO 150: Vespa Sprint • Vespa GL • Vespa Sprint Veloce • Vespa Super
180-200: Vespa Rally
R.O. 070642



121870140

PROLUNGA AMMORTIZZATORE POSTERIORE | *REAR SHOCK ABSORBERS EXTENSION*
Lunghezza 52 mm | *Lenght 52 mm*
Confezione 5 Pz. | *5 Pcs Packing*

PIAGGIO 125-150-200: Vespa PX
R.O. 149871





121870150

PROLUNGA AMMORTIZZATORE POSTERIORE | *REAR SHOCK ABSORBERS EXTENSION*
Lunghezza 48 mm | *Lenght 48 mm*
Confezione 5 Pz. | *5 Pcs Packing*

PIAGGIO 125: Vespa PX 98-01 • Vespa PX T5 85-89 • Vespa PX Euro2 01-07 • Vespa PX 30 Anni 07-08
R.O. 199344



225180193

KIT PERNO MOZZO | *HUB PIN KIT*

PIAGGIO 125-150: Vespa
VBA-VBB-VNA-VNB-VNC-VBC



121870513

PIASTRA AMMORTIZZATORE | *SHOCK ABSORBER PLATE*

PIAGGIO 125-150-200: Vespa PX T5
VNX-VLX-VSX-VNX5T
R.O. 174806



121858630

BULLONE AMMORTIZZATORE POSTERIORE | *REAR SHOCK ABSORBER BOLT*
Confezione 5 Pz. | *5 Pcs Packing*

PIAGGIO 50: Vespa S 68-82 • Vespa Special 75-83 • Vespa Revival 91 • Vespa PK 82-85
PIAGGIO 100: Vespa 90 78-83 • Vespa PK S 82-85
PIAGGIO 125: Vespa Primavera 67-83 • Vespa ET3 76-83 • Vespa PK 82-85 • Vespa PX Euro2 01-07 • Vespa PX 98-01 • Vespa PXE Arcobaleno 81-97 • Vespa Sprint 65-66 • Vespa Rally 68-72 • Vespa 55-65 (VN1/VN2/VNA2/VNA1/VNB1/VNB2/VNB3/VNB4/VNB5/VNB6)
PIAGGIO 150: Vespa PXE Arcobaleno 81-97 • Vespa Sprint 65-66 • Vespa Rally 68-72
R.O. 014689



121830750

SILENTBLOCK ATTACCO INFERIORE AMMORTIZZATORE | *LOWER SHOCK ABSORBER MOUNTING SILENTBLOCK*

KYMCO 50: Agility R12 05 • B&W Eu2 03 • B&W 02 Cx Super 94-97 • Cx 93 • Dink 50 4T 07 • Dink Classic Eu2 03 • Dink Lc 98-02 • DjW 94-00 • Dj X 91-92 • Dj Y 93 • Fever Zx Eu2 03-04 • Fever Zx 99-00 • Filly Lx 01-02 • Filly 98-00 • Heroism 95-97 • K 12 95-00 • Kb 95-00 • Like 2T 09 • Mixer Eu2 04 • Mxfr 02-03 • People Eu2 03 • People Eu2 08 • People Eu2 11 • People S 4T 06-08 • People S 05-08 • People 99-00 • People 04 • Sento 08 • Sniper Dd 94-96 • Sniper 93 • Super 9 Sport Eu2 03 • Super 9 Sport Eu2 04 • Super 9 00 • Top Boy 97-00 • Vitality 2T 04 • Vitality 4T 04 • Yup Eu2 03 • Yup 02
125: Agility 4T 06 • Agility Plus 14 • Agility R16 09 • B&w 125-150 Eu2 03-04 • B&w 125-150 00 • Dink 125 Eu3 06-07 • Dink 125-150 97-98 • Dink Classic 125-150 Eu2 03 • Dink Classic 125-150 02 • Dink Lx 125-150 98-00 • G-Dink 12 • Grand Dink 125-150 Eu2 03-04 • Grand Dink 125-150 01-02 • Heroism 95-97 • Movie 125 Eu3 06-07 • Movie XL 125-150 Eu2 03-04 • Movie XL 125-150 01 • Movie 99-00 • People 125-150 Eu2 03 • People 125-150 99-00 • People Eu3 07 • People Eu3 08 • People Eu3 11 • People S Dd Eu3 07-08 • People S 05 • Vivio 125-150 00
150: Heroism 95-97 • Movie 150 Eu3 06-07 •
200: Dink Classic 04 • Dink Eu3 I 06-07 • People S 07
R.O. 00109006



121830780

SILENTBLOCK ATTACCO INFERIORE AMMORTIZZATORE | *LOWER SHOCK ABSORBER MOUNTING SILENTBLOCK*

KYMCO 125: Downtown 09 • K-Xct I K-Xct I 12-14 People Gti 10
200: Downtown I 10 • People Gti 10-14
250: X Citing I 06-07 • X Citing 05
300: Downtown I 09-11 • Downtown Abs I 11 • Downtown Abs 10 • K-Xct I Abs 12-14 • People Gti Abs 12-14 • People Gti 10-14 • X Citing 300 I R 08-09
350: Downtown I Abs 15
400: X Citing I Abs 14 • X Citing I Abs 13-15
500: X Citing R 05-09 • X Citing I R07-08 • X Citing I 06-08
700: Myroad I 11
R.O. 00121034



KIT PERNO SOSPENSIONE - *SUSPENSION PIN KIT*

225180020

2 Gabbie Ø 18 x 24 x 16 | *2 Cages Ø 18 x 24 x 16*
1 Perno Ø 22 x 107,5 | *1 Pin Ø 22 x 107,5*

PIAGGIO 50: Vespa 50 • Vespa PK • Vespa PK S • Vespa PK XL
PIAGGIO 125: Vespa Primavera • Vespa ET3
(Gabbia + Perno • *Cage + Pin* R.O: 090457 + 070181)



225180030

2 Gabbie Ø 12 x 18 x 12 | *2 Cages Ø 12 x 18 x 12*
2 Guarnizioni | *2 Gaskets*
1 Perno Ø 12 x 50 | *1 Pin Ø 12 x 50*

PIAGGIO: Vespa Px • Pe> 82
R.O. 174099 - 138725 - 174098



225180040

2 Gabbie Ø 16 x 22 x 14 | *2 Cages Ø 16 x 22 x 14*
2 Guarnizioni | *2 Gaskets*
1 Perno Ø 16 x 56 | *1 Pin Ø 16 x 56*

PIAGGIO: Vespa Pk 50 • Rush • N • HP • FL • Pk 125 • ET4 • Sfera • Quartz • Zip Sp 96 • Skipper • Exagon • Px • PE 82> • Cosa • 1 • 2
R.O. 137146 - 119219 - 177451



225180060

2 Gabbie Ø 12 x 20 x 12 | *2 Cages Ø 12 x 20 x 12*
2 Rondelle Ø 12 x 23 x 2 | *2 Washer Ø 12 x 23 x 2*
1 Perno Ø 12 x 104 | *1 Pin Ø 12 x 104*

PIAGGIO: Vespa 125-150 dal 1963 • Ape 50
R.O. 016781



225180070

2 Gabbie Ø 16 x 22 x 14 | *2 Cages Ø 16 x 22 x 14*
2 Guarnizioni | *2 Gaskets*
1 Perno Ø 16 x 71 | *1 Pin Ø 16 x 71*
Perno per ingrassaggio | *With nipple grease*

PIAGGIO 50-250: Ape
R.O. 154676



225180080

2 Gabbie Ø 16 x 22 x 14 | *2 Cages Ø 16 x 22 x 14*
2 Guarnizioni | *2 Gaskets*
1 perno Ø 16 x 75 | *1 Pin Ø 16 x 75*

PIAGGIO: Ape P 50



225180090

2 Gabbie Ø 16 x 22 x 14 | *2 Cages Ø 16 x 22 x 14*
2 Guarnizioni | *2 Gaskets*
1 Perno Ø 16 x 75 | *1 Pin Ø 16 x 75*
Perno per ingrassaggio | *With nipple grease*

PIAGGIO 50: Ape P



225180110

2 Gabbie Ø 18 x 24 x 13 | *2 Cages Ø 18 x 24 x 13*
2 Guarnizioni | *2 Gaskets*
1 Perno Ø 18 x 74 | *1 Pin Ø 18 x 74*
Perno per ingrassaggio | *With nipple grease*

PIAGGIO: Ape Mp



225180130

2 Gabbie Ø 18 x 24 x 13 | *2 Cages Ø 18 x 24 x 13*
2 Guarnizioni | *2 Gaskets*
1 Perno Ø 18 x 84 | *1 Pin Ø 18 x 84*

PIAGGIO: Ape Car • Ape 501 • 601 V





225180140

2 Gabbie Ø 18 x 24 x 15 | *2 Cages Ø 18 x 24 x 15*
2 Guarnizioni | *2 Gaskets*
1 Perno Ø 18 x 91 | *1 Pin Ø 18 x 91*

PIAGGIO: Ape Tm • P 602 Ultimo tipo



225180150

2 Gabbie Ø 18 x 24 x 15 | *2 Cages Ø 18 x 24 x 15*
2 Guarnizioni | *2 Gaskets*
1 Perno Ø 18 x 91 | *1 Pin Ø 18 x 91*
Perno per ingrassaggio | *With nipple grease*

PIAGGIO: Ape Tm • P 602 Ultimo tipo





KIT FORCELLA

FORK KITS

Modello	CC	Anno *Year*	Upgrade Kit Forcella - *Fork Upgrade Kit*					Olio Forcella - *Fork Oil*			
			Codice YSS *YSS Code*	Codice RMS *RMS Code*	Precarico di Partenza *Preload Start [Mm]*	Diametro Stelo *Clamp Size [Mm]*	Kit	Tipologia *Typology*	Livello Olio *Oil level [Mm]*	Codice YSS *YSS Code*	Codice RMS *RMS Code*
BMW											
F 650Gs	798	07-12	Y-FCC36-KIT-09-001	**204598063**	10	41	4	20W	165	FO20W	**204598003**
HARLEY DAVIDSON											
Sporter Roadster 883 R	883	07-15	Y-FCM34-KIT-05-002	**204598073**	30	39	2	20W	175	FO20W	**204598003**
Xl1200 Custom	1200	08>	Y-FCM34-KIT-05-001	**204598072**	55	39	2	20W	130	FO20W	**204598003**
HONDA											
Wave 110I	110	13>	Y-FCC21-KIT-01-003	**204598050**	17	26	1	20W	60	FO20W	**204598003**
Click 125I	125	12>	Y-FCC21-KIT-01-002	**204598049**	20	26	1	20W	70	FO20W	**204598003**
Wave 125I	125	13>	Y-FCC21-KIT-01-004	**204598051**	10	26	1	20W	100	FO20W	**204598003**
Pcx 150	150	15>	Y-FCM26-KIT-01-001	**204598064**	6	31	1	20W	80	FO20W	**204598003**
Pcx 150I	150	18>	Y-FCC26-KIT-01-017	**204598097**	8	31	1	20W	65	FO20W	**204598003**
Cbr 250R	250	11-16	Y-FCM33-KIT-01-006	**204598070**	25	39	4	20W	165	FO20W	**204598003**
Forza 300	300	13>	Y-FCC31-KIT-01-009	**204598058**	12	35	2	20W	75	FO20W	**204598003**
Cb 500F	500	14>	Y-FCM37-KIT-01-007	**204598074**	12	41	4	20W	135	FO20W	**204598003**
Cb 500X	500	14>	Y-FCM37-KIT-01-011	**204598077**	20	41	4	20W	135	FO20W	**204598003**
Cbr 500R	500	14>	Y-FCM37-KIT-01-010	**204598076**	12	41	4	20W	135	FO20W	**204598003**
Rebel 500	500	17>	Y-FCM37-KIT-01-015	**204598081**	25	41	4	20W	150	FO20W	**204598003**
Cb 650F	650	14>	Y-FCM37-KIT-01-008	**204598075**	30	41	4	20W	150	FO20W	**204598003**
Cbr 650F	650	14>	Y-FCM37-KIT-01-012	**204598078**	25	41	4	20W	150	FO20W	**204598003**
Nc 700	700	14>	Y-FCM37-KIT-01-013	**204598079**	20	41	4	15W	100	FO15W	**204598002**
Nc 750	750	15>	Y-FCM37-KIT-01-014	**204598080**	30	41	4	15W	100	FO15W	**204598002**
KAWASAKI											
Klx 140	140	17>	Y-FCM29-KIT-02-008	**204598093**	10	35	4	15W	130	FO15W	**204598002**
W 175	175	17>	Y-FCM25-KIT-02-009	**204598099**	12	31	2	20W	200	FO20W	**204598003**
Ninja 250SI/Z 250SI	250	15>	Y-FCC33-KIT-02-007	**204598062**	15	39	4	30W	160	FO30W	**204598004**
Z 250	250	13>	Y-FCC33-KIT-02-005	**204598061**	15	39	4	20W	125	FO20W	**204598003**
Ninja 250/Ninja 300	250/300	13>	Y-FCC32-KIT-02-001	**204598059**	20	39	4	20W	125	FO20W	**204598003**
Ninja Zx250 / Ninja Zx400	250/400	18>	Y-FCM37-KIT-02-010	**204598100**	18	41	4	20W	100	FO20W	**204598003**
Z 300	300	13>	Y-FCC32-KIT-02-006	**204598060**	20	39	4	20W	110	FO20W	**204598003**
Er-6N/Ninja 650	650	12-16	Y-FCM38-KIT-02-002	**204598082**	23	41	4	20W	110	FO20W	**204598003**
Z 650 / Ninja 650	650	17>	Y-FCM38-KIT-02-003	**204598083**	25	41	4	20W	100	FO20W	**204598003**
W 800	800	12>	Y-FCM34-KIT-02-004	**204598071**	25	39	4	10W	120	FO10W	**204598001**
ROYAL ENFIELD											
Himalayan	400	18>	Y-FCM38-KIT-08-003	**204598101**	5	41	4	20W	220	FO20W	**204598003**
Bullet 500	500	09-17	Y-FCM30-KIT-08-002	**204598069**	17	35	5	20W	270	FO20W	**204598003**
Classic 500	500	09-17	Y-FCM30-KIT-08-001	**204598068**	15	35	5	20W	270	FO20W	**204598003**
SUZUKI											
Gsx-R 150	150	17>	Y-FCC26-KIT-03-002	**204598094**	20	31	4	30W	125	FO30W	**204598004**
TRIUMPH											
Bonneville T100	900	12-16	Y-FCM38-KIT-06-001	**204598086**	17	41	4	20W	115	FO20W	**204598003**
Bonneville T100	900	17>	Y-FCM38-KIT-06-005	**204598090**	15	41	3	20W	115	FO20W	**204598003**
Scrambler 900	900	12>	Y-FCM38-KIT-06-003	**204598088**	18	41	4	20W	125	FO20W	**204598003**
Street Scrambler	900	17>	Y-FCM38-KIT-06-002	**204598087**	15	41	3	20W	115	FO20W	**204598003**
Street Twin	900	16-17	Y-FCM38-KIT-06-006	**204598091**	12	41	4	20W	100	FO20W	**204598003**
Truxton 900	900	12-16	Y-FCM38-KIT-06-004	**204598089**	25	41	4	20W	145	FO20W	**204598003**
Bonneville Bobber	1200	16>	Y-FCM38-KIT-06-007	**204598095**	35	41	3	20W	150	FO20W	**204598003**
YAMAHA											
Jupiter Rc	115	16>	Y-FCC21-KIT-04-006	**204598054**	17	26	2	20W	90	FO20W	**204598003**
Gt 125	125	15>	Y-FCC21-KIT-04-007	**204598055**	25	26	2	20W	100	FO20W	**204598003**
Q-Bix (Abs)	125	17>	Y-FCC21-KIT-04-013	**204598098**	15	26	2	20W	70	FO20W	**204598003**
Q-Bix (No Abs)	125	17>	Y-FCC21-KIT-04-009	**204598056**	15	26	2	20W	70	FO20W	**204598003**
Exciter 150	150	15>	Y-FCC21-KIT-04-004	**204598053**	25	26	2	20W	75	FO20W	**204598003**
Yzf-R15	150	14-16>	Y-FCM30-KIT-04-005	**204598066**	20	35	4	15W	120	FO15W	**204598002**
Aerox 155	155	17>	Y-FCC21-KIT-04-002	**204598052**	30	26	2	20W	55	FO20W	**204598003**
N- Max 155	155	15>	Y-FCC25-KIT-04-001	**204598057**	-	31	1	20W	55	FO20W	**204598003**



Modello	CC	Anno *Year*	Upgrade Kit Forcella - *Fork Upgrade Kit*					Olio Forcella - *Fork Oil*			
			Codice YSS *YSS Code*	Codice RMS *RMS Code*	Precarico di Partenza *Preload Start [Mm]*	Diametro Stelo *Clamp Size [Mm]*	Kit	Tipologia *Typology*	Livello Olio *Oil level [Mm]*	Codice YSS *YSS Code*	Codice RMS *RMS Code*
X-Max	300	17>	Y-FCM30-KIT-04-010	**204598067**	20	35	4	20W	205	FO20W	**204598003**
X-Max (Shorten L -30)	300	17>	Y-FCM30-KIT-04-012	**204598096**	5	35	5	30W	110	FO30W	**204598004**
Yzf-R3	320	14>	Y-FCM38-KIT-04-003	**204598084**	15	41	4	20W	100	FO20W	**204598003**
Sr400/Sr400fi	400	08-17	Y-FCM28-KIT-04-011	**204598065**	17	35	2	20W	150	FO20W	**204598003**
Mt-07	689	15>	Y-FCM38-KIT-04-008	**204598085**	10	41	4	20W	160	FO20W	**204598003**

Kit 1 - Contiene 2 molle forcella, 2 tappi forcella e 2 valvole forcella per molle progressive.
Kit 2 - Contiene 2 molle forcella, 2 tappi forcella, 2 valvole forcella per molle progressive e 2 distanziali per molle progressive.
Kit 3 - Contiene 2 molle forcella, 2 tubi, 2 rondelle in acciaio, 2 tappi forcella e 2 valvole forcella per molle progressive.
Kit 4 - Contiene 2 molle forcella, 2 tubi, 2 rondelle in acciaio, 2 tappi forcella, 2 valvole forcella per molle progressive e 2 distanziali per molle progressive.
Kit 5 - Contiene 2 molle forcella, 2 tubi, 2 rondelle in acciaio, 2 valvole forcella per molle progressive e 2 distanziali per molle progressive. | *Kit 1 - 2 Fork springs, 2 Fork caps and 2 Pd Fork valves included.*
Kit 2 - 2 Fork springs, 2 Fork caps and 2 Pd Fork valves and 2 Pd spacers included.
Kit 3 - 2 Fork springs, 2 spacer tubes, 2 steel washers, 2 fork caps and 2 pd fork valves included.
Kit 4 - 2 Fork springs, 2 spacer tubes, 2 steel washers, 2 fork caps and 2 pd fork valves and 2 Pd spacers included.
Kit 4 - 2 Fork springs, 2 spacer tubes, 2 steel washers, 2 Pd fork valves and 2 Pd spacers included.

OLIO FORCELLA YSS - *YSS FORK OIL*

204598000

Codice YSS: FO05W | *YSS Code: FO05W*
Olio forcella YSS viscosità 5W | *YSS fork oil viscosity 5W*



204598001

Codice YSS: FO10W | *YSS Code: FO10W*
Olio forcella YSS viscosità 10W | *YSS fork oil viscosity 10W*



204598002

Codice YSS: FO15W | *YSS Code: FO15W*
Olio forcella YSS viscosità 15W | *YSS fork oil viscosity 15W*



204598003

Codice YSS: FO20W | *YSS Code: FO20W*
Olio forcella YSS viscosità 20W | *YSS fork oil viscosity 20W*



204598004

Codice YSS: FO30W | *YSS Code: FO30W*
Olio forcella YSS viscosità 30W | *YSS fork oil viscosity 30W*



204598005

Codice YSS: FO705W | *YSS Code: FO705W*
Olio forcella YSS viscosità 7,5W | *YSS fork oil viscosity 7,5W*



CUSCINETTI
BEARINGS
COJINETES
ROULEMENT



Roulements à Billes
Roulements à Rouleaux



Rodamientos de Bolas
Jaula de Agujas



Ball Bearings
Roller Cages



CUSCINETTI A SFERE **1414**
GABBIE A RULLI **1422**

CUSCINETTI RADIALI A SFERE NON SCHERMATI - *BALL BEARINGS WITHOUT SEAL*



	Misure (mm) *Size (mm)*	Codice RMS *RMS Code*		Applicazione *Application*	Tipologia Gabbia *Cage Material*	OEM
SKF	10 - 30 - 9 (6200 C3)	**100200200**		Albero primario | *Driven pulley shaft*	Gabbia in nylon | *Nylon cage*	007035 (Piaggio)
SKF	12 - 32 - 10 (6201 C3)	**100200020**		Albero primario Asse ruota posteriore | *Driven pulley shaft* *Rear wheel axle*	Gabbia in nylon | *Nylon cage*	961006201300 (Honda) 002800 (Piaggio)
SKF	12 - 37 - 12 (6301)	**100200230**		Albero primario | *Driven pulley shaft*	Gabbia in nylon | *Nylon cage*	91003K54003 (Honda) 090024 (Piaggio)
NRB	12 - 40 - 12	**100200503**		Ingranaggio multiplo | *Gearbox bearing*	Gabbia in nylon | *Nylon cage*	097718 (Piaggio)
SKF	15 - 35 - 11 (6202 C3)	**100200240**		Asse ruota posteriore Albero motore | *Rear wheel axle* *Crankshaft*	Gabbia in nylon | *Nylon cage*	961006202300 (Honda) 102258 (Piaggio)
SKF	15 - 42 - 13 (6302)	**100200640**		Asse ruota posteriore | *Rear wheel axle*	Gabbia in nylon | *Nylon cage*	030209 (Piaggio)
SKF	17 - 40 - 12 (6203 TN9-C5H)	**100200080**		Albero primario Ruota anteriore | *Driven pulley shaft* *Front wheel*	Gabbia in acciaio | *Steel cage*	002802 (Piaggio)
SKF	17 - 40 - 12 (6203)	**100200250**		Albero primario Ruota anteriore | *Driven pulley shaft* *Front wheel*	Gabbia in nylon | *Nylon cage*	002802 (Piaggio)
SKF	17 - 40 - 12 (6203 C3)	**100200450**		Carter | *Crank-case*	Gabbia in nylon | *Nylon cage*	008019 (Kymco)
SKF	17 - 47 - 14 (6303)	**100200090**		Albero motore Tamburo freno anteriore | *Crankshaft* *Front brake drum*	Gabbia in nylon | *Nylon cage*	227687 (Piaggio)
SKF	17 - 47 - 14 (6303 C3)	**100200430**		Albero motore | *Crankshaft*	Gabbia in nylon | *Nylon cage*	227687 (Piaggio)
SKF	17 - 47 - 14 (6303TN9C3)	**100200550**		Albero motore | *Crankshaft*	Gabbia in acciaio | *Steel cage*	-
SKF	20 - 42 - 12 (6004)	**100200270**		Asse ruota posteriore | *Rear wheel axle*	Gabbia in nylon | *Nylon cage*	9009GE0003 (Honda)
SKF	20 - 47 - 14 (6204 C5)	**100200110**		Albero motore | *Crankshaft*	Gabbia in nylon | *Nylon cage*	090131 (Piaggio)
SKF	20 - 47 - 14 (6204 C3)	**100200390**		Albero motore lato volano | *Crankshaft flywheel side*	Gabbia in nylon | *Nylon cage*	090131 (Piaggio)
SKF	20 - 47 - 14 (6204)	**100200590**		Campana frizione | *Clutch bell*	Gabbia in nylon | *Nylon cage*	090131 (Piaggio)
Koyo	20 - 47 - 14 (83299-9RTCS31)	**100200330**		Albero motore | *Crankshaft*	Gabbia in nylon | *Nylon cage*	-
SKF	20 - 47 - 14 (6204TN9-C4HLHT23)	**100200120**		Albero motore | *Crankshaft*	Gabbia in acciaio | *Steel cage*	-
NTN	20 - 47 - 14 (6204 C4)	**100200482**		Albero Motore Lato volano | *For Crankshaft flywheel magneto*	Gabbia in nylon | *Nylon cage*	-
SKF	20 - 47 - 14 (6204 C4MT)	**100200630**		Albero motore | *Crankshaft*	Gabbia in nylon | *Nylon cage*	-
SKF	20 - 52 - 12 (BB1-3055B)	**100200140**		Albero motore | *Crankshaft*	Gabbia in nylon | *Nylon cage*	431125 (Piaggio) 722483 (Peugeot)
NTN	20 - 52 - 12 (BB1-3055B)	**100200142**		Albero motore | *Crankshaft*	Gabbia in nylon | *Nylon cage*	610198M (Piaggio)
SKF	20 - 52 - 12 (BB1B-447205A)	**100200290**		Albero Motore Lato volano | *For Crankshaft flywheel magneto*	Gabbia in acciaio | *Steel cage*	-
SKF	22 - 50 - 14 (62/22)	**100200420**		Mozzo ruota posteriore | *Rear wheel hub*	Gabbia in nylon | *Nylon cage*	243303 (Piaggio)
SKF	25 - 47 - 8 (16005)	**100200520**		Ingranaggio Frizione | *Clutch gear*	Gabbia in nylon | *Nylon cage*	007130 (Piaggio)

CUSCINETTI RADIALI A SFERE NON SCHERMATI - *BALL BEARINGS WITHOUT SEAL*



	Misure (mm) *Size (mm)*	Codice RMS *RMS Code*		Applicazione *Application*	Tipologia Gabbia *Cage Material*	OEM
SKF	25 - 52 - 13 (BB1-3056 C)	**100200280**		Albero motore | *Crankshaft*	Gabbia in acciaio | *Steel cage*	-
SKF	25 - 52 - 15 (6205-ETN9/C4)	**100200540**		Albero motore | *Crankshaft*	Gabbia in acciaio | *Steel cage*	-
SKF	25 - 56 - 12 (BB1-3096)	**100200150**		Albero motore Albero motore lato puleggia motrice | *Crankshaft* *For Crankshaft drivingpulley side*	Gabbia in nylon | *Nylon cage*	91005KEE730 (Honda) 736052 (Peugeot) 00109229 (Kymco)
RMS YOUR BEST PARTNER	25 - 56/52 - 18	**100200883**		Ruota posteriore | *Rear Wheel*	- | -	19030050 (Innocenti)
SKF	25 - 62 - 12 (BB1-0855)	**100200160**		Albero Motore lato frizione | *For Crankshaft clutch side*	Gabbia in nylon | *Nylon cage*	097804 (Piaggio)
NRB	25 - 62 - 12	**100200161**		Albero Motore lato frizione | *For Crankshaft clutch side*	- | -	097804 (Piaggio)
NRB	25 - 62 - 12	**100200163**		Albero Motore lato frizione | *For Crankshaft clutch side*	- | -	097804 (Piaggio)
SKF	25 - 62 - 17 (6305-C5)	**100200170**		Albero Motore lato frizione | *For Crankshaft clutch side*	Gabbia in nylon | *Nylon cage*	169809 (Piaggio)
NTN	25 - 68 - 12 CX (SCO5B31CS37)	**100200182**		Albero motore | *Crankshaft*	Gabbia in nylon | *Nylon cage*	483970 (Piaggio)
NTN	35 - 72 - 17 (6207C3)	**100200662**		Albero motore | *Crankshaft*	Gabbia in nylon | *Nylon cage*	-
NTN	35 - 72 - 15 (TMSC07A87CS3PX1)	**100200672**		Albero motore | *Crankshaft*	Gabbia in nylon | *Nylon cage*	-

Dati tecnici sui cuscinetti radiali a sfere non schermati - *Ball bearings without seal specifications*
BB1 = Cuscinetti a sfere esecuzione speciale - *Deepgrove ball bearings with special execution*
TN9 = Gabbia stampata di Poliammide 6,6 rinforzata con fibre di vetro - *Nylon cage reinforced with fiberglass*
C1 = Tolleranza inferiore a C2 - *Clearance inferior than C2*
C2 = Tolleranza inferiore al normale - *Clearance inferior than standard*
C3 = Tolleranza maggiore del normale - *Clearance superior than standard*
C4 = Tolleranza maggiore di C3 - *Clearance superior than C3*
C5 = Tolleranza maggiore di C4 - *Clearance superior than C4*

CUSCINETTI RADIALI A SFERE CON SCHERMO Z SU ENTRAMBI I LATI - *BALL BEARINGS WITH METAL SEAL Z ON BOTH SIDES*



	Misure (mm) *Size (mm)*	**Codice RMS** *RMS Code*		**Applicazione** *Application*	**Tipologia Gabbia** *Cage Material*	**OEM**
SKF	12 - 32 - 10 (6201-2Z)	**100200350**		Varie | *Various*	-	-
RMS YOUR BEST PARTNER	28 - 8 - 9 (638 ZZ ISB)	**100200803**		Carter Motore | *Crankcase*	-	82521R (Piaggio)

Dati tecnici sui cuscinetti radiali a sfere con schermo Z su entrambi i lati - ***Ball bearings with metal seal Z on both sides specifications***
2Z = Schermo in lamiera stampata su entrambi i lati del cuscinetto - *Plated shield on both the sides of the bearing*
C1 = Tolleranza inferiore a C2 - *Clearance inferior than C2*
C2 = Tolleranza inferiore al normale - *Clearance inferior than standard*
C3 = Tolleranza maggiore del normale - *Clearance superior than standard*
C4 = Tolleranza maggiore di C3 - *Clearance superior than C3*
C5 = Tolleranza maggiore di C4 - *Clearance superior than C4*

CUSCINETTI RADIALI A SFERE CON SCHERMO RS1 SU ENTRAMBI I LATI - *BALL BEARINGS WITH SYNTHETIC RUBBER SEAL RS1 ON BOTH SIDES*



	Misure (mm) *Size (mm)*	Codice RMS *RMS Code*		Applicazione *Application*	Tipologia Gabbia *Cage Material*	OEM
SKF	8 - 22 - 7 (608-2RSHC3LHT23)	**100200190**		Pompa acqua | *Water pump*	Gabbia in nylon | *Nylon cage*	842797 (Piaggio)
SKF	10 - 26 - 8 (6000-2RSH/C3)	**100200880**	NEW	Ruota | *Wheel*	Gabbia in acciaio | *Steel cage*	-
SKF	10 - 30 - 9 (6200-2RSH/C3)	**100200890**	NEW	Ruota | *Wheel*	Gabbia in acciaio | *Steel cage*	-
SKF	10 - 35 - 11 (6300-2RSH)	**100200220**		Asse ruota anteriore | *Front wheel axle*	Gabbia in nylon | *Nylon cage*	-
SKF	12 - 24 - 6 (61901-2RS1-3HT)	**100200010**		Puleggia condotta | *Driven pulley*	Gabbia in nylon | *Nylon cage*	289953 (Piaggio)
SKF	12 - 28 - 8 (6001-2RSH/C3)	**100200900**	NEW	Ruota | *Wheel*	Gabbia in acciaio | *Steel cage*	-
NTN	12 - 32 - 10 (6201-2RSH)	**100200360**		Ruota anteriore | *Front Wheel*	Gabbia in nylon | *Nylon cage*	007135 (MBK)
SKF	12 - 32 - 10 (6201-LL5/5KU)	**100200362**		Ruota anteriore | *Front Wheel*	Gabbia in nylon | *Nylon cage*	007135 (MBK)
SKF	12 - 37 - 12 (6301-2RSH/C3)	**100200910**	NEW	Ruota | *Wheel*	Gabbia in acciaio | *Steel cage*	-
SKF	15 - 32 - 9 (6002-2RSH)	**100200040**		Puleggia condotta | *Driven pulley*	Gabbia in nylon | *Nylon cage*	285007 (Piaggio)
SKF	15 - 35 - 11 (6202-2RSH)	**100200370**		Tamburo anteriore | *Front Drum*	Gabbia in nylon | *Nylon cage*	177610 (Piaggio)
SKF	15 - 42 - 13 (6302-2RSH)	**100200440**		Ruota posteriore | *Rear wheel*	Gabbia in nylon | *Nylon cage*	235834 (Piaggio)
SKF	17 - 30 - 7 (61903-2RS1)	**100200060**		Puleggia condotta | *Driven pulley*	Gabbia in nylon | *Nylon cage*	431069 (Piaggio)
SKF	17 - 35 - 10 (6003-2RSH)	**100200070**		Puleggia condotta Supporto motore | *Driven pulley Engine mounting*	Gabbia in nylon | *Nylon cage*	431068 (Piaggio)
SKF	17 - 40 - 12 (6203-2RSH)	**100200380**		Varie | *Various*	Gabbia in nylon | *Nylon cage*	-
SKF	17 - 47 - 14 (BB1-0683-2RS1)	**100200100**		Albero primario | *Driven pulley shaft*	Gabbia in nylon | *Nylon cage*	432305 (Piaggio)
SKF	17 - 47 - 14 (6303-2RSH)	**100200920**	NEW	Ruota | *Wheel*	Gabbia in acciaio | *Steel cage*	-
SKF	20 - 42 - 12 (6004-2RSH/C3)	**100200530**		Varie | *Various*	Gabbia in nylon | *Nylon cage*	-
SKF	20 - 47 - 14 (BB1-0843)	**100200130**		Albero ruota posteriore | *Rear wheel axle*	Gabbia in nylon | *Nylon cage*	434735 (Piaggio)
SKF	20 - 52 - 15 (6304-2RSH/C3)	**100200930**	NEW	Ruota | *Wheel*	Gabbia in acciaio | *Steel cage*	-
SKF	25 - 42 - 9 (61905-2RS1)	**100200940**	NEW	Ruota | *Wheel*	Gabbia in acciaio | *Steel cage*	-
SKF	25 - 47 - 12 (6005 2RSH)	**100200800**		Ruota anteriore/posteriore | *Front/ rear Wheel*	Gabbia in nylon | *Nylon cage*	-
SKF	25 - 47 - 12 (6005-2RSH/C3)	**100200950**	NEW	Ruota | *Wheel*	Gabbia in acciaio | *Steel cage*	-
SKF	20 - 47 - 14 (6204-2RSH)	**100200600**		Ruota posteriore | *Rear wheel*	Gabbia in nylon | *Nylon cage*	43473T (Piaggio)
SKF	25 - 52 - 15 (6205-2RSH/C3)	**100200960**	NEW	Ruota | *Wheel*	Gabbia in acciaio | *Steel cage*	-
SKF	25 - 62 - 17 (6305-2RS1/C3)	**100200970**	NEW	Ruota | *Wheel*	Gabbia in acciaio | *Steel cage*	-

CUSCINETTI RADIALI A SFERE CON SCHERMO RS1 SU ENTRAMBI I LATI - *BALL BEARINGS WITH SYNTHETIC RUBBER SEAL RS1 ON BOTH SIDES*



	Misure (mm) *Size (mm)*	Codice RMS *RMS Code*		Applicazione *Application*	Tipologia Gabbia *Cage Material*	OEM
SKF	30 - 55 - 13 (6006-2RS1/C3)	**100200980**	NEW	Ruota | *Wheel*	Gabbia in acciaio | *Steel cage*	-
SKF	30 - 62 - 16 (6206-2RS1/C3)	**100200990**	NEW	Ruota | *Wheel*	Gabbia in acciaio | *Steel cage*	-
SKF	35 - 55 - 10 (61907-2RZ)	**100201000**	NEW	Ruota | *Wheel*	Gabbia in acciaio | *Steel cage*	-

Dati tecnici sui cuscinetti radiali a sfere con schermo RS1 su entrambi i lati - ***Ball bearings with synthetic rubber seal RS1 on both sides specifications***
2RS1 = Guarnizione strisciante di gomma (NBR), con rinforzo in lamiera stampata sui due lati del cuscinetto - *Double rubber seals ball bearings*
C1 = Tolleranza inferiore a C2 - *Clearance inferior than C2*
C2 = Tolleranza inferiore al normale - *Clearance inferior than standard*
C3 = Tolleranza maggiore del normale - *Clearance superior than standard*
C4 = Tolleranza maggiore di C3 - *Clearance superior than C3*
C5 = Tolleranza maggiore di C4 - *Clearance superior than C4*

CUSCINETTI RADIALI A SFERE CON SCHERMO RS1 SU UN LATO - *BALL BEARINGS WITH SYNTHETIC RUBBER SEAL RS1 ON ONE SIDE*



	Misure (mm) *Size (mm)*	Codice RMS *RMS Code*		Applicazione *Application*	Tipologia Gabbia *Cage Material*	OEM
SKF	10 - 30 - 9 (6200-RSH)	**100200210**		Asse ruota anteriore | *Front wheel axle*	Gabbia in nylon | *Nylon cage*	-
SKF	12 - 32 - 10 (6201-RSH)	**100200030**		Asse ruota anteriore | *Front wheel axle*	Gabbia in nylon | *Nylon cage*	961406200010 (Honda)
SKF	15 - 35 - 11 (6202-RSH)	**100200050**		Tamburo freno ant.e mozzo ant. | *Front brake drumand front hub*	Gabbia in nylon | *Nylon cage*	177610 (Piaggio)
SKF	17 - 40 - 12 (6203-RSH)	**100200260**		Albero ruota posteriore | *Rear wheel axle*	Gabbia in nylon | *Nylon cage*	-

Dati tecnici sui cuscinetti radiali a sfere con schermo RS1 su un lato - ***Ball bearings with synthetic rubber seal RS1 on one side specifications***
2RS1 = Guarnizione strisciante di gomma (NBR), con rinforzo in lamiera stampata sui due lati del cuscinetto - *Double rubber seals ball bearings*
C1 = Tolleranza inferiore a C2 - *Clearance inferior than C2*
C2 = Tolleranza inferiore al normale - *Clearance inferior than standard*
C3 = Tolleranza maggiore del normale - *Clearance superior than standard*
C4 = Tolleranza maggiore di C3 - *Clearance superior than C3*
C5 = Tolleranza maggiore di C4 - *Clearance superior than C4*

CUSCINETTO A RULLI - *ROLLER BEARINGS*



Misure (mm) *Size (mm)*	**Codice RMS** *RMS Code*		**Applicazione** *Application*	**Tipologia Gabbia** *Cage Material*	**OEM**
20 - 47 - 14	**100190023**		Albero Motore I *Crankshaft*	-	0071605 (Piaggio)
25 - 38 - 15	**100190010**		Albero Motore I *Crankshaft*	-	133068 (Piaggio)
25 - 38 - 15	**100190013**		Albero Motore Lato Volano I *Crankshaft Flywheel Side*	-	133068 (Piaggio)
29,7 - 42,5 - 9,5	**100190033**		Cuscinetto albero cambio I *Gear shaft bearing*	-	-

100151513

RULLINI | *ROLLERS*

PIAGGIO 125-150: Vespa PX T5
VNX2-VLX1-VSX1-VNX5T
R.O. 002457



100200870

KIT CUSCINETTI | *BEARING KIT*

PIAGGIO: Vespa PX 125-150
LML





ASTUCCI A RULLI APERTI DA UN LATO - *DRAWN CUPS ONE SIDE OPEN*

Codice RMS *RMS Code*		Confezione *Packing*	Modello *Model*	OEM
100151000		5 Pz. I *5 Pcs*	Misura: **Ø 12x18x12** Carter motore - *Crank case* Asse ruota posteriore - *Wheel axle* Mozzo ruota posteriore - *Rear wheel axle*	224309 (Piaggio)
100151190		5 Pz. I *5 Pcs*	Misura: **Ø 16x14,3** Perno sospensione - *Suspension pin*	137146 (Piaggio)
100151200		5 Pz. I *5 Pcs*	Misura: **Ø 12x12** Perno sospensione - *Suspension pin*	174099 (Piaggio)

ASTUCCI A RULLI APERTI DA AMBO I LATI - *DRAWN CUPS TWO SIDES OPEN*

Codice RMS *RMS Code*		Confezione *Packing*	Modello *Model*	OEM
100151100		5 Pz. I *5 Pcs*	Misura: **Ø 12x18x12** Albero trasmissione mozzo posteriore - *Rear wheel axle*	130491 (Piaggio)
100151110		5 Pz. I *5 Pcs*	Misura: **Ø 18x24x16** Perno molleggio - *Pin Suspension arm*	090457 (Piaggio)
100151120		5 Pz. I *5 Pcs*	Misura: **Ø 22x28x12** Mozzo anteriore - *Front brake drum*	177436 (Piaggio)
100151130		5 Pz. I *5 Pcs*	Misura: **Ø 20x26x16** Mozzo anteriore - *Front brake drum*	177442 (Piaggio)
100151140		5 Pz. I *5 Pcs*	Misura: **Ø 16x22x22** Campana frizione - *Pulley*	120668 (Piaggio)
100151150		-	Misura: **Ø 28,5x35x12** Albero secondario - *Driven shaft*	106956 (Piaggio)
100151153		-	Misura: **Ø 28,5x35x12** Albero secondario - *Driven shaft*	106956 (Piaggio)
100151170		-	Misura: **Ø 25x33x18** Puleggia fissa frizione posteriore - *Driven pulley*	829808 (Piaggio)
100151180		-	Misura: **Ø 12x20x12**	152387 (Piaggio)
100151210		-	Misura: **Ø 16x12**	137731 (Piaggio)
100151230		5 Pz. I *5 Pcs*	Misura: HK **Ø 20x12** Mozzo ruota posteriore - *Rear wheel axle*	131509 (Piaggio)
100151240		5 Pz. I *5 Pcs*	Misura: BK **Ø 15x12** Mozzo ruota posteriore - *Rear wheel axle*	103689 (Piaggio)
100151250		5 Pz. I *5 Pcs*	Misura: HK **Ø 13x12** Mozzo ruota posteriore - *Rear wheel axle*	103614 (Piaggio)
100151260		5 Pz. I *5 Pcs*	Misura: BK **Ø 09x12** Mozzo ruota posteriore - *Rear wheel axle*	103613 (Piaggio)
100151270		5 Pz. I *5 Pcs*	Misura: HK **Ø 17x12** Mozzo ruota posteriore - *Rear wheel axle*	103696 (Piaggio)
100151280		5 Pz. I *5 Pcs*	Misura: HK **Ø 14x12** Albero secondario - *Driven shaft* Dispositivo anti rollio - *Anti-roll device* Mozzo ruota posteriore - *Rear wheel axle*	122671 (Piaggio)
100151290		10 Pz. I *10 Pcs*	Misura: HK **Ø 16x16** Mozzo ruota posteriore - *Rear wheel axle*	174710 (Piaggio)

Dati tecnici sui cuscinetti - ***Ball bearings specifications***
2RS1 = Guarnizione strisciante di gomma (NBR), con rinforzo in lamiera stampata sui due lati del cuscinetto - *Double rubber seals ball bearings*
C1 = Tolleranza inferiore a C2 - *Clearance inferior than C2*
C2 = Tolleranza inferiore al normale - *Clearance inferior than standard*
C3 = Tolleranza maggiore del normale - *Clearance superior than standard*
C4 = Tolleranza maggiore di C3 - *Clearance superior than C3*
C5 = Tolleranza maggiore di C4 - *Clearance superior than C4*



GABBIE A RULLI - *ROLLER CAGES*

Codice RMS *RMS Code*		Confezione *Packing*	Modello *Model*	OEM
100150010		5 Pz. I *5 Pcs*	**"DURKOP"** per spinotto Ø 10x14x13 I *for piston pin Ø 10x14x13*	-
100150050		5 Pz. I *5 Pcs*	**"DURKOP"** per spinotto Ø 10x13x14,5 I *for piston pin Ø 10x13x14,5*	500521 (Piaggio)
100150150		5 Pz. I *5 Pcs*	**"DURKOP"** per spinotto Ø 12x15x15 I *for piston pin Ø 12x15x15*	-
100151310	NEW	-	Per Spinotto Ø 12x17x14 I *for piston pin Ø 12x17x14*	00110108 (Kymco)
100150250		5 Pz. I *5 Pcs*	**"DURKOP"** per spinotto Ø 12x17x15 I *for piston pin Ø 12x17x15*	-
100150300		5 Pz. I *5 Pcs*	**"DURKOP"** per spinotto Ø 12x17x13 I *for piston pin Ø 12x17x13*	500501 (Piaggio)
100150400		5 Pz. I *5 Pcs*	**"DURKOP"** per spinotto Ø 15x19x20 I *for piston pin Ø 15x19x20*	500541 (Piaggio)
100150450		5 Pz. I *5 Pcs*	**"DURKOP"** per spinotto Ø 16x20x20 I *for piston pin Ø 16x20x20*	500511 (Piaggio)
100150453	NEW	5 Pz. I *5 Pcs*	Per spinotto Ø 16x20x20 I *for piston pin Ø 16x20x20*	500511 (Piaggio)
100150500		5 Pz. I *5 Pcs*	**"DURKOP"** per spinotto Ø 18x23x20 I *for piston pin Ø 18x23x20*	500531 (Piaggio)

GABBIA A RULLI INGRANAGGIO AVVIAMENTO - *ROLLER CAGE STARTER GEAR*

Codice RMS *RMS Code*		Confezione *Packing*	Modello *Model*	OEM
100150600		5 Pz. I *5 Pcs*	**MALAGUTI - MBK - YAMAHA** 50	

Dati tecnici sui cuscinetti - *Ball bearings specifications*
2RS1 = Guarnizione strisciante di gomma (NBR), con rinforzo in lamiera stampata sui due lati del cuscinetto - *Double rubber seals ball bearings*
C1 = Tolleranza inferiore a C2 - *Clearance inferior than C2*
C2 = Tolleranza inferiore al normale - *Clearance inferior than standard*
C3 = Tolleranza maggiore del normale - *Clearance superior than standard*
C4 = Tolleranza maggiore di C3 - *Clearance superior than C3*
C5 = Tolleranza maggiore di C4 - *Clearance superior than C4*

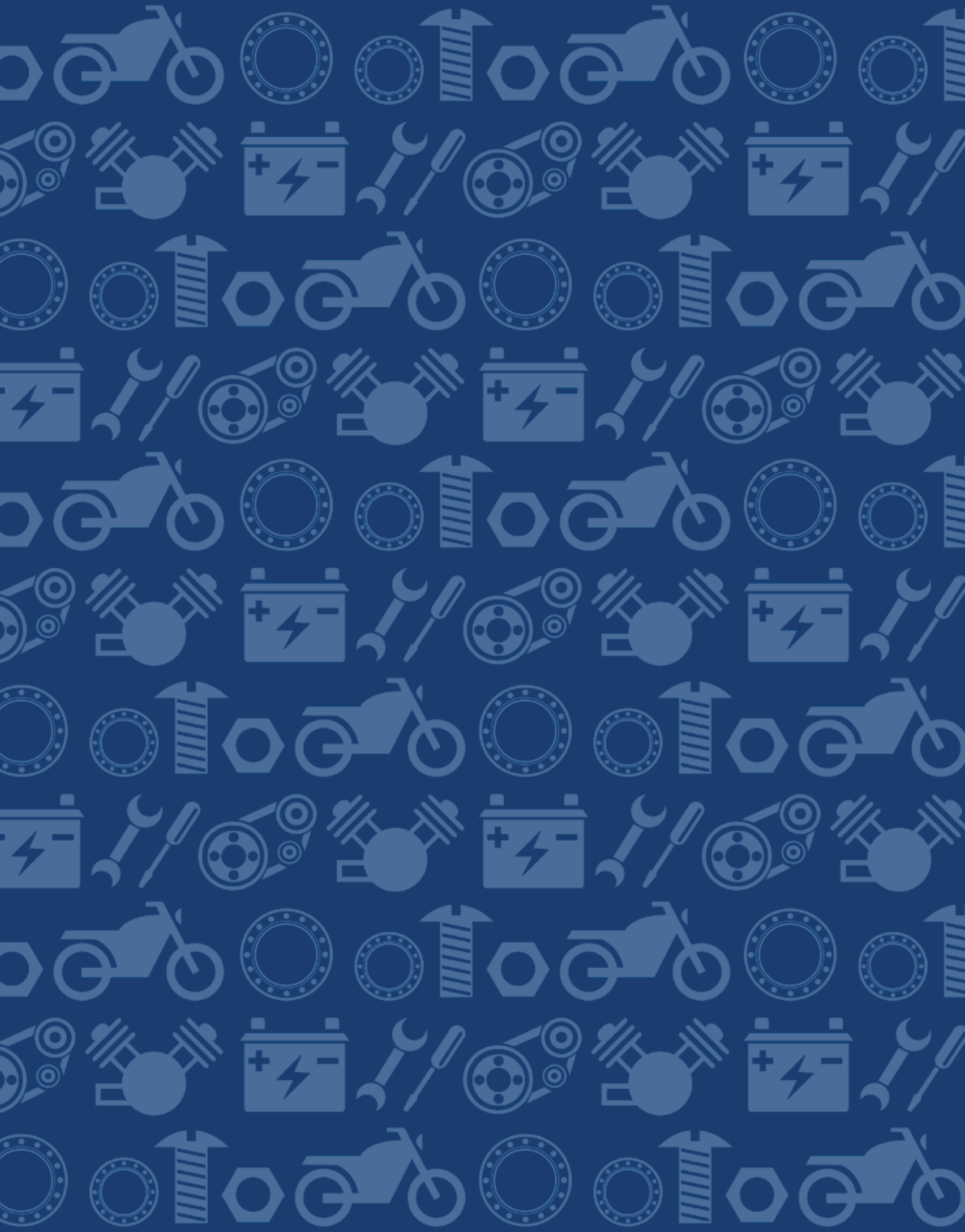

TENUTA

TIGHT SYSTEM
SISTEMA DE RETENES
SYSTÈME DE JOINTS

Joints	*Juntas*	*Gaskets*	**GUARNIZIONI** **1426**
Joints d'Huile	*Retenes*	*Oil Seals*	**PARAOLI** **1458**
O-Rings	*O-Rings*	*O-Rings*	**O-RING** **1477**

SERIE GUARNIZIONI MOTORE - *GASKET SETS*
APRILIA

100689000

Motori Scooter Minarelli cilindro verticale raffreddati ad aria | *Minarelli Scooter Engines with Air cooled vertical cylinder*



100689010

Motori Scooter Minarelli cilindro orizzontale raffreddati ad aria | *Minarelli Scooter Engines with Air cooled horizontal cylinder*



100689020

Motori Scooter Minarelli raffreddati a liquido | *Minarelli Scooter Engines with liquid cooled cylinder*

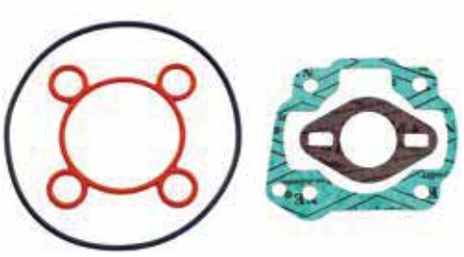

100680011

50: Amico 90-96

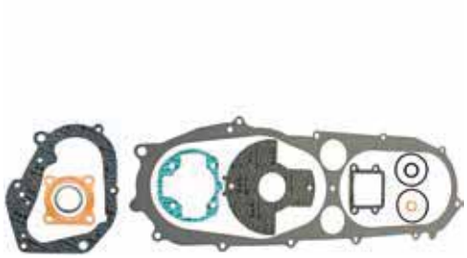

100680040

100680041

Iniezione e carburatore | *Injection and carburator*

50: Ditech

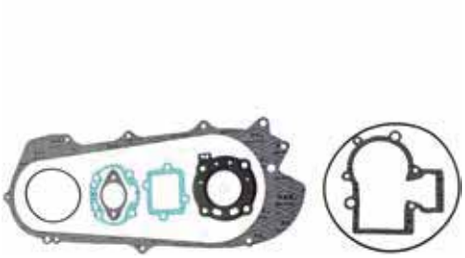

100680050

50: Rs



100680071

50: SR • Scarabeo • Rally • Gulliver



100681200

50: Mojito Custom 2T Motore Piaggio 04-10



100689170

50: SR Di Tech 00 00-03





100684200

50: Scarabeo 4T 4V 09-14 • SR Motard 4T 4V 13-14



100684260

50: Scarabeo 4T 02-06
100: Scarabeo 4T 01-05

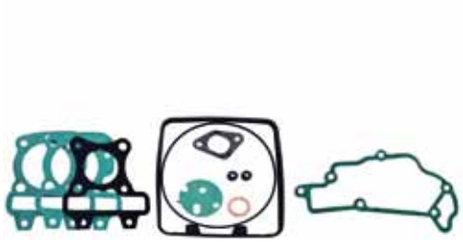

100689210

125: Scarabeo GT 99-02



100684230

125: Atlantic 03-05 • Scarabeo 03-06

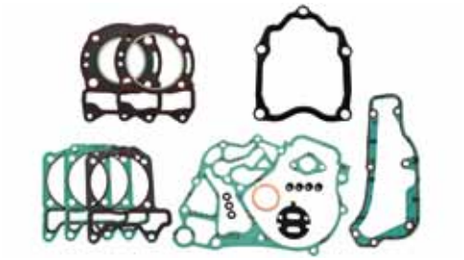

100684240

125: Mojito 03-07

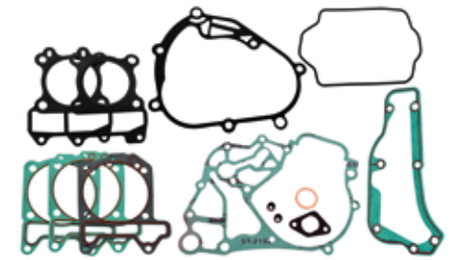

100689191

125: Leonardo 96-01



100684210

125: Mojito 08 • Sport City One 4T Eu3 08-11 • SR Motard 12-14

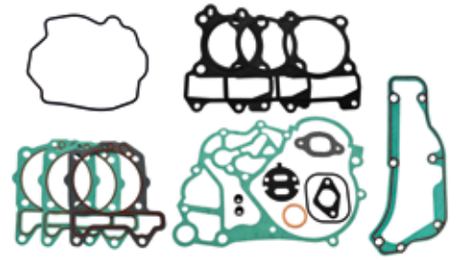

100689200

150: Leonardo 96-01



100689221

150: Scarabeo 99-02



100689160

250: Leonardo 99-01



100689550

250: Atlantic Eu3 06-08 • Scarabeo Light 06-08



100684220

250: Sport City Cube 08-12
300: Atlantic 10-11 • Scarabeo Light 09-10 • Sport City Street 11-14

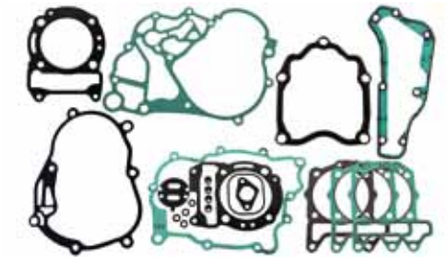

100689410

500: Atlantic 02-04 • Scarabeo 03-04



ATALA

100680830

50: Hacker

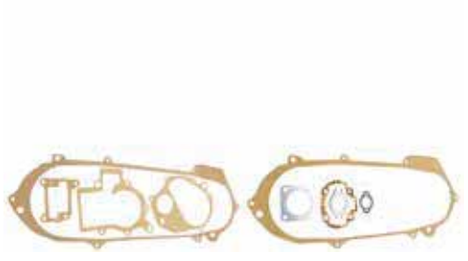

BENELLI

100689160

250: Velvet



BETA

100689290

125: Eikon 99-02



100689300

150: Eikon 99-02



DERBI

100684260

50-100: Atlantis 4T 04-06



100684230

125: GP1 06-08

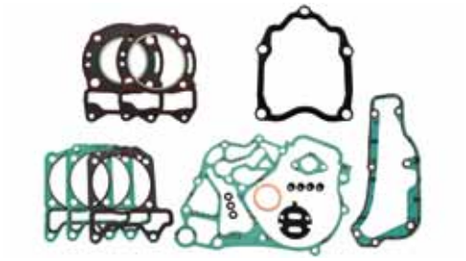

100684240

125-150: Boulevard 02-04

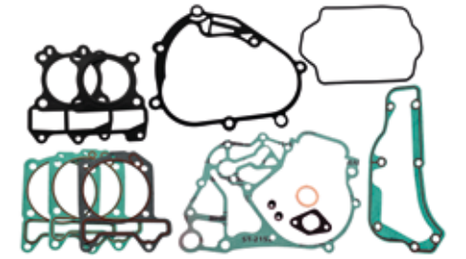

100684210

125: Boulevard 03-07 • Boulevard 4T Eu3 08-12 • Sonar 4T 09-11 • Variant Sport 4T Eu3 12
150: Boulevard 03-07 • Boulevard 4T Eu3 10 • Sonar 4T 09
200: Boulevard Eu2 05-06

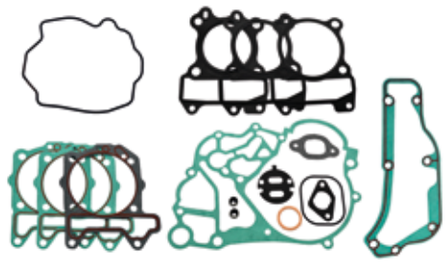

100684220

250: GP1 06-08
300: Rambla 10-11

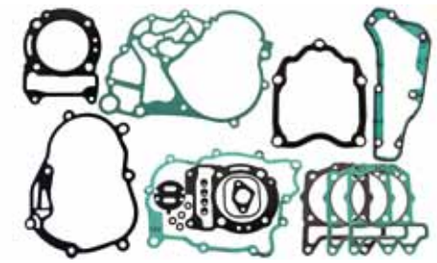

F. MORINI

100680830

Motori raffreddati ad aria | *Air cooled Engines*
50: AH L 94-95

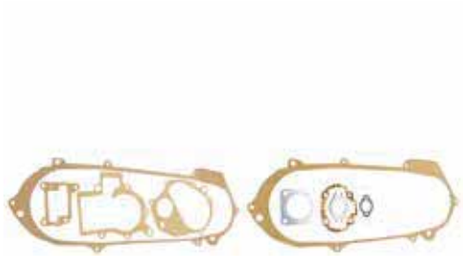

100689370

Carter Lungo | *Long Crankase*
50: H2



GILERA

100681200

50: Typhoon • Storm • Easy moving

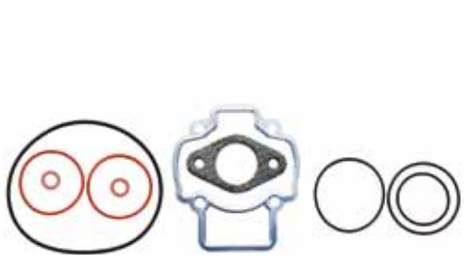

100689040

Motori raffreddati ad aria | *Air cooled Engines*
50



100689050

Motori raffreddati a liquido | *Liquid cooled Engines*
50: Runner 97-00

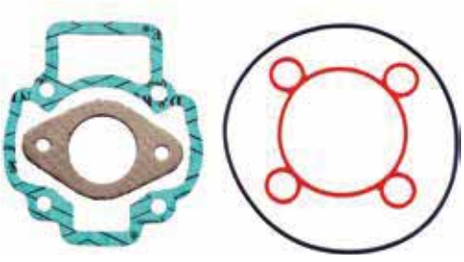



100689070

Motori raffreddati a liquido | *Liquid cooled Engines*

50: Runner Poggiali • Runner FL 02

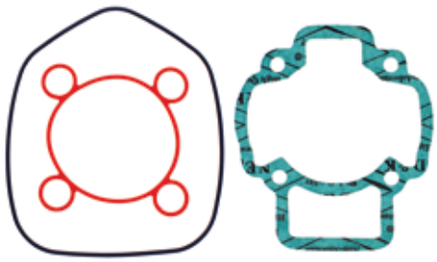

100689480

50: Runner Purejet 02-04

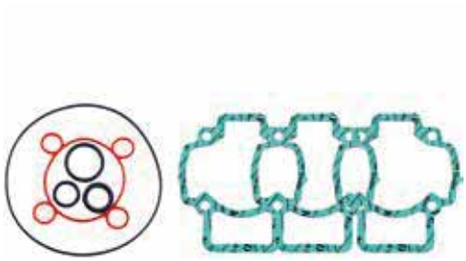

100689400

125: Dna 01 • Runner VX • Runner VX Race • Runner VX Sc 00-07



100689381

180: Runner SP FXR 97-02



100689390

180: Dna 01 • Runner VXR 00-01



HONDA

100683500

50: Vision 1° serie 85-87

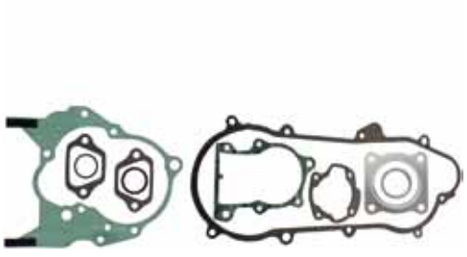

100689060

Motori raffreddati ad aria | *Air cooled Engines*

50: SH 96> • Sfx • Sky • Balj



100689230

125: Pantheon 98-02

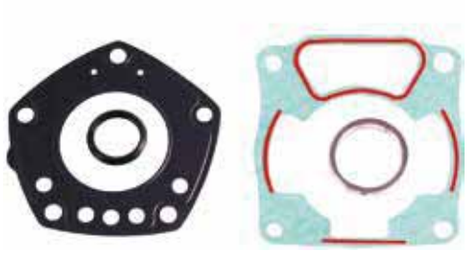

100680450

100680720 NEW

125: SH • Chiocciola • Dylan 00-01



100689080

125: SH • Chiocciola • Dylan 00-01



100689830

125: PCX 10-15

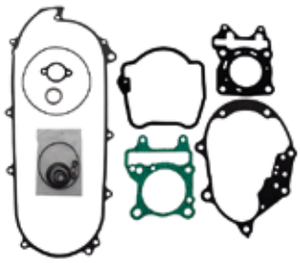

100680440

100680730 NEW

150: SH



100689090

150: SH



100689241

150: Pantheon 98-01



100689251

250: Foresight 98-99

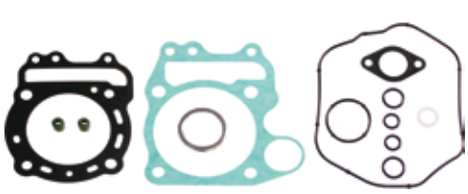

100689260

250: Jazz 01



100689561

300: SH

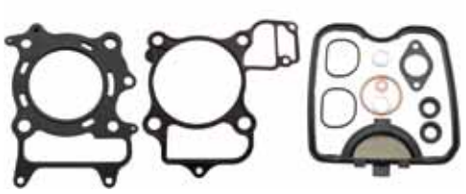

ITALJET

100680830

50: Formula



100689381

180: Dragster 99-00

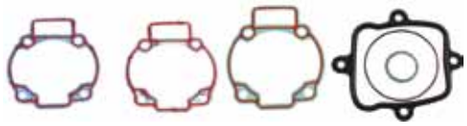

KYMCO

100680381

50: Agility 4T Carry 11 • Agility 4T R10 06-08 • Agility 4T R16 08-12 • Agility Plus 4T 14 • Agility R12 05 • Agility Rs 09 • Dink 4T 07 • Filly 98-00 • Filly RX 01-02 • Like 4T 09 • People S 4T 06-08 • Sento 08 • Super 8 07-13 • Vitality 4T 04



100684270

50: Agility 4T Carry 11 • Agility 4T R10 06-08 • Agility 4T R16 08-12 • Agility Plus 4T 14 • Agility R12 05 • Agility Rs 09 • Dink 4T 07 • Filly 98-00 • Filly RX 01-02 • Like 4T 09 • People S 4T 06-08 • Sento 08 • Super 8 07-13 • Vitality 4T 04



100689270

Raffreddato aria | *Air cooled*

50: Dink



100689280

Raffreddato liquido | *Liquid cooled*

50: Dink LC



100689680

50: Agility R16 08-12



100680391

125: Agility R16 08-12



100689290

125: Dink 97-98



100689330

125: People 99-00



100689350

125: B&W 00 • Dink LX 98-00 • Dink Classic 02-03



100689690

125: Agility R16 08-12



100689921

125: People One E4 16 • People One I DD 15 • People One I 13

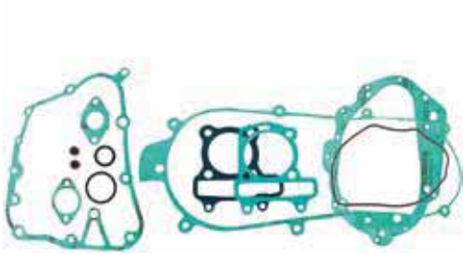

100680401

150: Agility R16 08-11



100689300

150: Dink 97-98



100689340

150: People 99-00



100689360

150: B&W 00 • Dink Classic 02-03 • Dink LX 98-00





100689700

150: Agility R16 08-11



100689710

200: Agility R16 10-12



100684290

200: Downtown I 10 • People GTI 10-14
300: Downtown I 09-11 • K-XCT 12-14 • People GTI 10-14

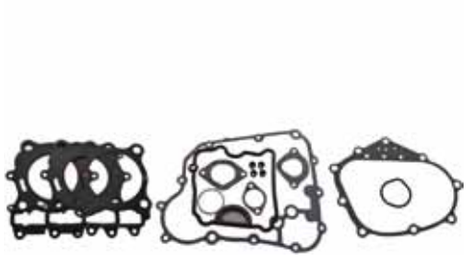

100689310

250: Grand Dink



100684280

250: B&W 00-03 • Gran Dink 01-04 • People LC 03-04 • People S 06-07 • X-Citing 05-07 • Yup 03
300: People S 08 • X-Citing 08 • X-Citing I R 08-09



MALAGUTI

100689000

Motori Scooter Minarelli cilindro verticale raffreddati ad aria | *Minarelli Scooter Engines with Air cooled Vertical cylinder*



100689010

Motori Scooter Minarelli cilindro orizzontale raffreddati ad aria | *Minarelli Scooter Engines with Air cooled horizontal cylinder*



100689020

Motori Scooter Minarelli raffreddati a liquido | *Minarelli Scooter Engines with liquid cooled cylinder*

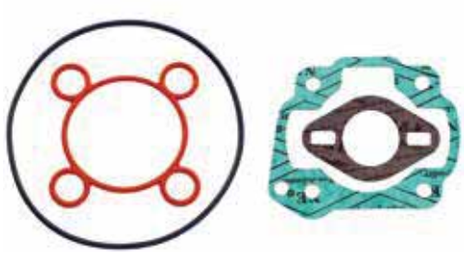

100680071

50: F12 • F15 • Centro

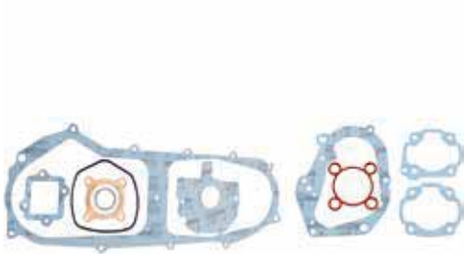

100682500

Raffreddato aria | *Air cooled*

50: F10 Yesterday 92-95



100689320

100: Ciak • F12 Phantom



100689140

125: Madison 99

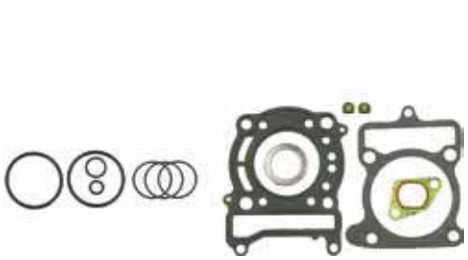

100689330

125: Ciak 00-01



100689350

125: F18 Warrior 00-01



100689340

150: Ciak 00-01



100689360

150: F18 Warrior 00-01



100689160

250: Madison 99-01



MBK

100680011

50: Booster 90-95



100680071

50: Nitro • Ovetto



100682500

50: Evolis 93-96



100683000

50: CT S Sorriso 90-93



100689470

100: Ovetto 00-02• Nitro 00-02 • Booster 99-01



100689140

125: Doodo 00-01 • Thunder • Skyliner 00-02

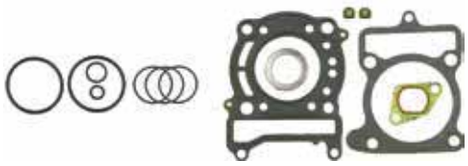

100689151

150: Doodo 01-02 • Xq Thunder 01-02 • Yp Skyliner 00-02



100689531

180: Skyliner 03



100689160

250: Skyliner 00-01



MINARELLI

100680080

50: AM6 II Serie

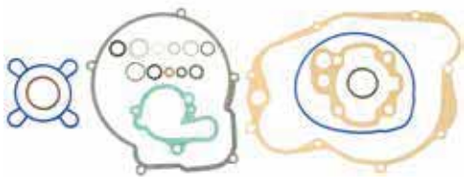

100689630

50: AM6 II Serie

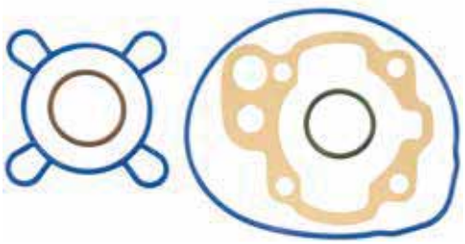

100689670

50: Motore AM6 50 cc.

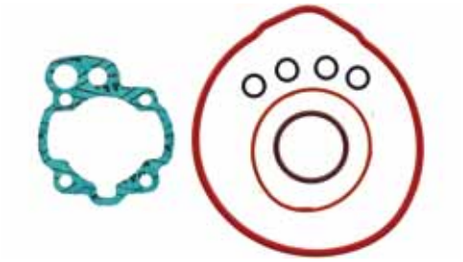

PEUGEOT

100683500

50: ST • STL • STL2 Rapido • Rapido 3 85-93

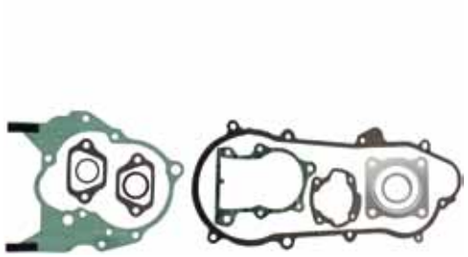

100683520

50: Buxy • Speedake • Squab 94-95



100689030

50: Buxy • Speedake • Squab 94-95



100689420

100: Trekker • Sv • Elyseo

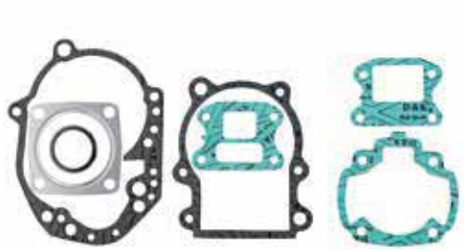

100689430

125: Elyseo 99



100689881

125: Tweet
150: Tweet

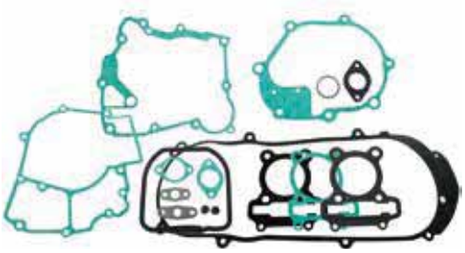



100689891

125: Geopolis

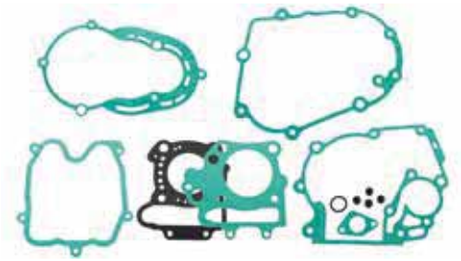

100689871

250: Geopolis
300: Geopolis

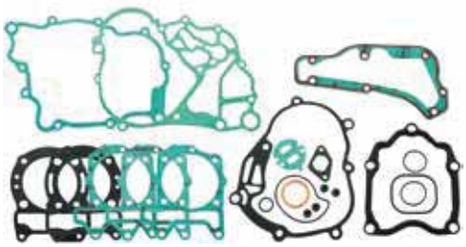

PIAGGIO

100681200

50: Diesis 01 • Free Delivery 00-01 • Free FL 95-02 • Free 92-94 • NRG Extreme 99-00 • NRG Mc3 01-04 • NRG power 06-11 • Sfera Maquillage 2 94 • Sfera RST 95-97 • Sfera 91-93 • Typhoon 01-08 • Vespa ET2 97-05 • Vespa LX 2T 09-13 • Zip Fast Rider Rst 96-97 • Zip Fast Rider 93-94 • Zip RST 96-99 • Zip 92-04
80: Skr City

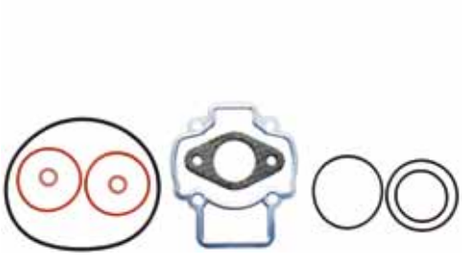

100684000

50: Ciao • Si • Bravo • Grillo • Boxer 70-93



100684021

50: NRG • NTT 95-96



100684040

50-90-125: Vespa Primavera ET3 66-84
R.O. 091925



100684050

50: Vespa PK XL Rush
R.O. 154616



100684200

50: Fly 4T 4V 12-13 • Vespa LX 4T 4V 09-13 • Vespa Primavera 4T 4V 13-15 • Vespa S 4T 4V 08-12 • Vespa Sprint 4T 4V 14



100684260

50: Liberty 4T 00-02 • Liberty 4T RST 04 • Vespa ET4 00-05 • Zip 4T 00-05
100: Free 00-02



100686500

50: Ape TMP

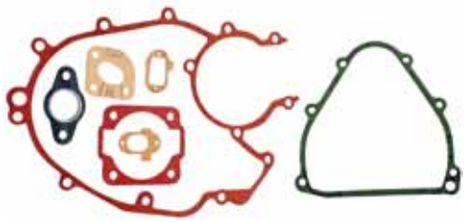

100689040

Motori raffreddati ad aria | *Air cooled Engines*
Confezione 5 Pz. | *5 Pcs Packing*

50: Motori Gilera e Piaggio raffreddati ad aria



100689050

Motori raffreddati a liquido | *Liquid cooled cylinder*
Confezione 5 Pz. | *5 Pcs Packing*

50: NRG Extreme 99-00 • NTT 95-96 • NRG 94-98 • Zip SP 96-00

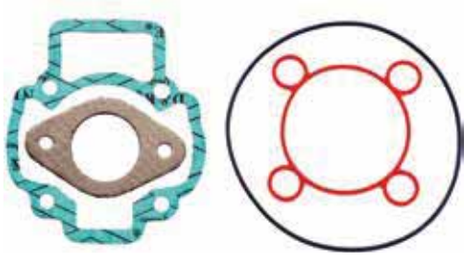

100689070

Motori raffreddati a liquido | *Liquid cooled cylinder*
Confezione 5 Pz. | *5 Pcs Packing*

50: NRG Mc3 01-02 • Zip SP 01-02

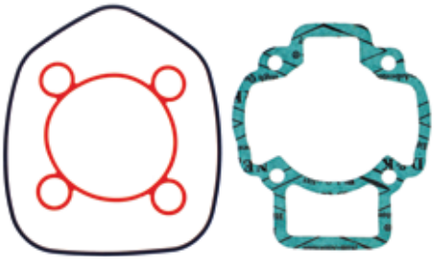

100689101

50: Fly 4T 2V 25-30 Km/h 12 • Fly 4T 05-07 • Liberty 4T Delivery Single 10-12 • Liberty 4T Delivery TNT 09 • Liberty 4T PTT 07-12 • Liberty 4T PTT Double 09-12 • Liberty 4T RST 04 • Liberty 4T Sport 07-08 • Liberty 4T 00-08 • Liberty Moc 4T 09-13 • Vespa ET4 00-05 • Vespa LX 4T 05-08 • Zip 4T 00-13



100689480

50: NRG Purejet 02-04

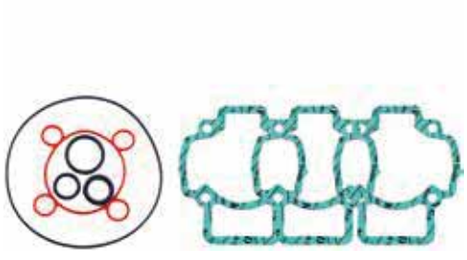

100689640

Per cilindro Ø43 MM - 10 008 0690 | *For Ø43 MM cylinder kit - 10 008 0690*

50: Ciao

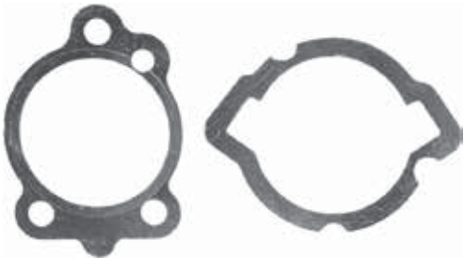

100689941

50: Liberty I-get 4T 3V IE 15





100684070

Confezione 5 Pz. | *5 Pcs Packing*

125: Vespa T5 85-89
R.O. 154699



100684160

125: Vespa Granturismo VNL2T

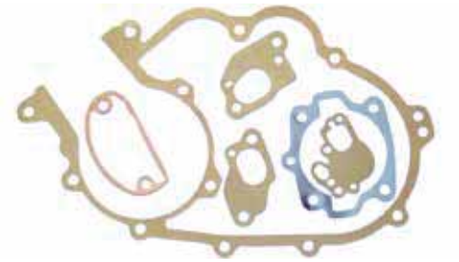

100689400

125: Super Hexagon GTX 00-02 • X9 01-02



100689780

125: Hexagon LX4 98-99 • Liberty 98-00 • Sfera 95-97 • Vespa ET4 96-98

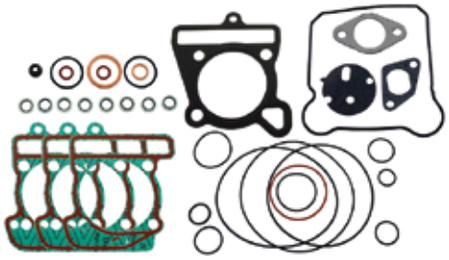

100684031

125-150: Hexagon 94-96

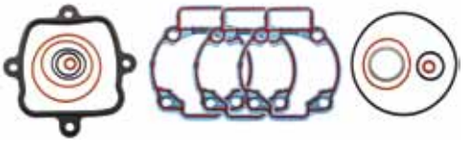

100684090

125-150: Vespa PX • Vespa PXE Arcobaleno Sprint 3° serie 78-93
R.O. 154563



100684110

Con Miscelatore | *With mixer*

125-150: Cosa CL-CLX 88-91 • Cosa 2 91-97 • Vespa PXE Arcobaleno 81-97 • Vespa PX 98-01
R.O. 154546

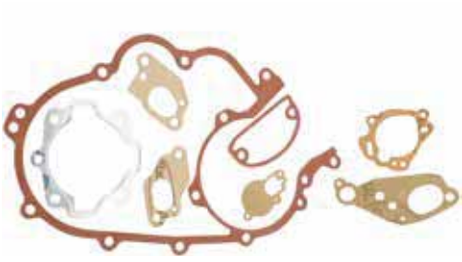

100684130

125-150: Vespa 1961
R.O. 86684

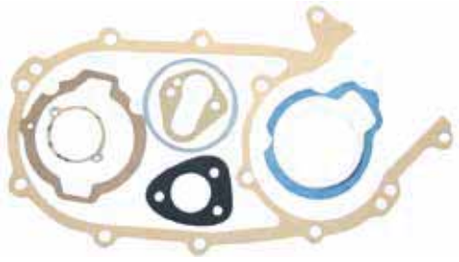

100684140

125-150: Vespa VNB1T-VNB2T
R.O. 86686



100684180

125-150: Vespa Super VBC1T
R.O. 91991



100684250

125: Fly 4T 3V Ie 12-15 • Liberty 4T 3V Ie 13-14 • Vespa 946 4T 3V 13-14 • Vespa LX 4T 4V 12-13 • Vespa LX Primavera 4T 3V 13-14 • Vespa S 4T 3V 12 • Vespa Sprint 4T 3V 14-15
150: Liberty 4T 3V 13-14 • Vespa GTS Super Ie 4T 3V 14-15 • Vespa LT 4T 3V 14 • Vespa LX 4T 3V IE 12-13 • Vespa Primavera 4T 3V 13-14 • Vespa Sprint 4T 3V IE 15



100689110

125-150: Liberty



100689951

125: Liberty Iget 4T 3V IE 15 • Vespa 946 4T 3V ABS Armani 15 • Vespa 946 4T 3V ABS 13-15 • Vespa Sprint 4T 3V IE 14-15
150: Liberty Iget 4T 3V IE 15 • Vespa GTS Super IE 4T 3V 14-15 • Vespa LT 4T 3V IE 14 • Vespa Primavera 4T 3V 13-15 • Vespa Sprint 4T 3V IE 15

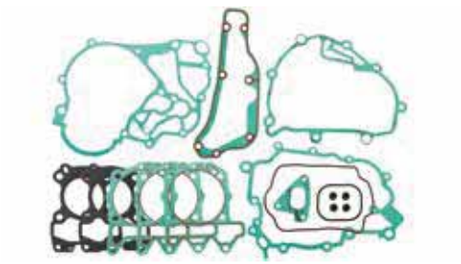

100684210

125: Fly 05-11 • Liberty 4T 01-11 • Liberty 4T Eu3 06-15 • Liberty 4T 2V 09-12 • Skipper 4T 00-02 • Typhoon 4T 2V Eu3 10-11 • Vespa ET4 99-02 • Vespa LX 05-11 • Vespa LXV 06-13 • Vespa S 07-11 • X8 Street Eu2 06-07 • Zip 00-02
150: Fly 05-08 • Liberty 4T Eu3 08-13 • Vespa LX 09-12 • Vespa S 4T 09-12 • X8 Street Eu2 06-08
200: Liberty 4T 06-08 • Liberty RST 04 • Liberty Sport 06 • Liberty 06

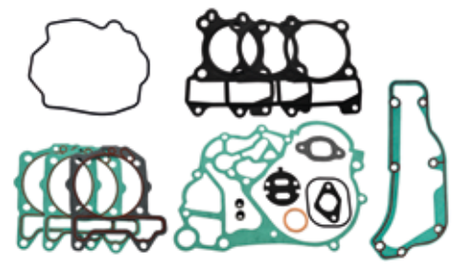

100684230

125: Beverly RST 04-07 • Vespa Gran Turismo 03-07 • Vespa GTV 06-08 • X8 04-06 • X8 Premium Eu2 06 • X9 Evolution 03-06
200: Vespa Gran Turismo 06-07 • X8 05-07 • X9 02-03 • X9 Evolution 03

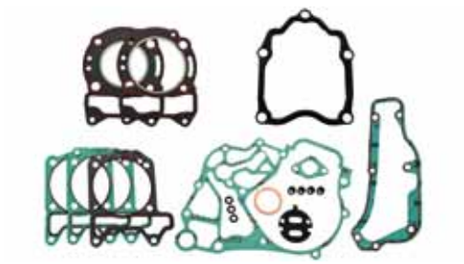

100684240

125: Beverly 01-05 • Fly Eu3 07 • Liberty 01-05 • Skipper 4T 00-02 • Super Hexagon GTX 12 01-02 • Vespa ET4 99-02 • Vespa Gran Turismo 03-05 • X8 04-06 • X9 Evolution 03 • X9 01-02 • Zip 00-02 • X9 Amalfi 00-03
200: Liberty RST 04 • X9 Evolution 03 • X9 02-03 • Carnaby 07-08 • Vespa Gran Turismo 06-07 • X8 05-07

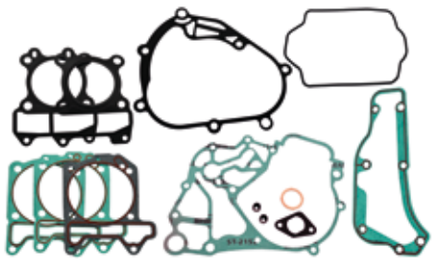

100689490

125-200: Beverly 01-02

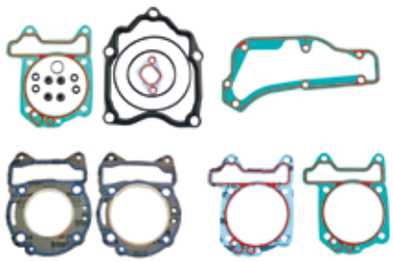

100684080

150: Vespa GL Sprint
R.O. 091730



100684170

150: Vespa Sprint VLB-VLA

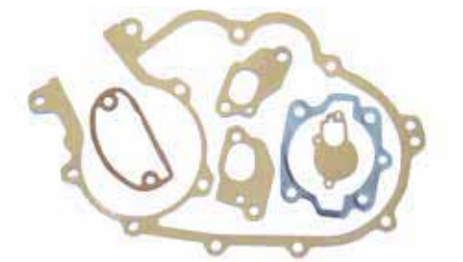

100684190

150: Vespa Super GTR

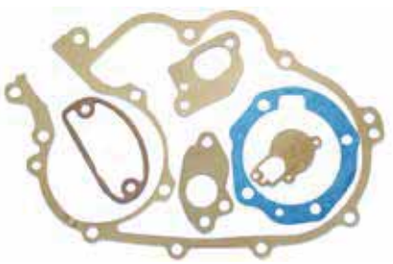

100684150

160: Vespa GS VSB1T



100689381

180: Hexagon LXT 97-99

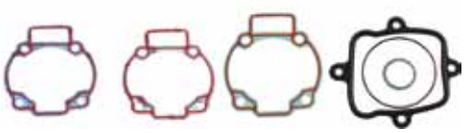

100689390

180: Super Hexagon GTX 00-02 • X9 Amalfi 00-03



100684100

200: Vespa PE • Vespa PX Arcobaleno Rally 84-93
R.O. 154547



100684120

Con Miscelatore | *With mixer*

200: Cosa 88-91 • Cosa 2 91-97 • Vespa PXE Arcobaleno 81-97 • Vespa PX 98-01



100686530

220: Ape MP P501 - Ape P601

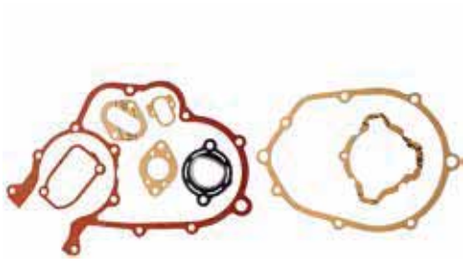

100686540

220: Ape TM 602 - Ape TM 703

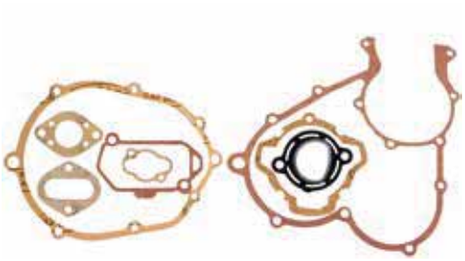

100684220

250: Beverly 04-09 • Carnaby 08 • MP3 06-09 • Vespa GTS 05-14 • Vespa GTV 07-09 • X Evo 07-13 • X7 Eu3 08 • X8 Eu3 05-08 • X9 Evolution 04-06
300: Beverly RST 10-15 • Beverly Tourer Eu3 09-10 • Carnaby Cruiser 09-12 • MP3 10-14 • MP3 Yourban 11-15 • Vespa GTS 08-15 • Vespa GTV 10-13 • X7 Evo Eu3 09-10

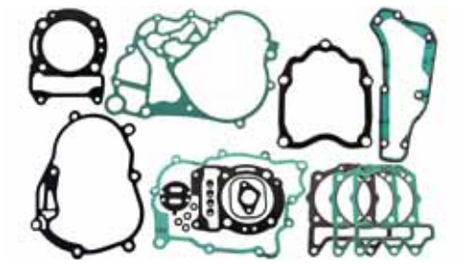

100689550

250: Beverly Cruiser 07-09 • Beverly IE Eu3 06-08 • Beverly 06-07 • Beverly RST 04-05 • Beverly Sport 06-08 • Beverly Tourer Eu3 08-09 • Carnaby 08 • MP3 LT 08-09 • MP3 06-09 • Vespa GT 60 Eu3 06-07 • Vespa GTS 05-13 • Vespa GTV 06-09 • Vespa GTS Abs 05-12 • X Evo 07-13 • X7 Eu3 08 • X8 Eu3 05-08 • X9 Evolution 04-08



100689931

350: Beverly 4T 4V Ie Eu3 Sport Touring 11-14 • X10 4T 4V IE Eu3 12-13



100686520

420: Ape MP



100689410

500: X9 01-02



100689500

500: Beverly 02-03



SUZUKI

100680060

50: Katana 50 LC 97-00 • Ux Zillion 99 • Ay 01-04



100680830

50: Motore F. Morini



100689440

150: Burgman



100689120

250: Burgman 98-02



100689450

250: Burgman 03-06



100689130

400: Burgman 99-02

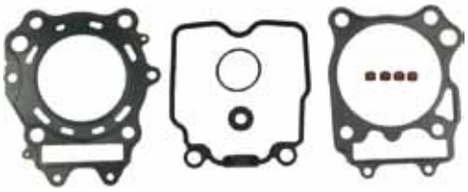

100689460

400: Burgman 03-06



YAMAHA

100689000

Motori Scooter Minarelli cilindro verticale raffreddati ad aria | *Minarelli Scooter Engines with Air cooled vertical cylinder*



100689010

Motori Scooter Minarelli cilindro orizzontale raffreddati ad aria | *Minarelli Scooter Engines with Air cooled horizontal cylinder*



100689020

Motori Scooter Minarelli raffreddati a liquido | *Minarelli Scooter Engines with liquid cooled cylinder*

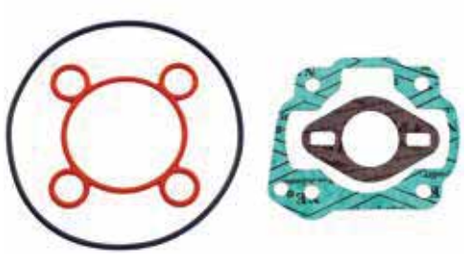

100680011

50: Bw'S 90-93

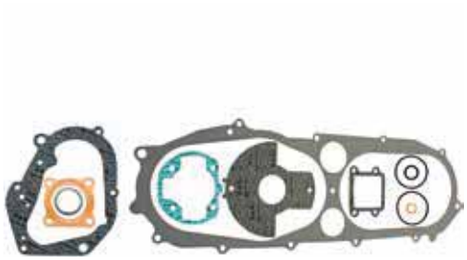

100680071

Raffreddato aria e liquido (Cilindro orizzontale) | *Air and liquid cooled (Horizontal cylinder)*

50: Motore Ma-My 50

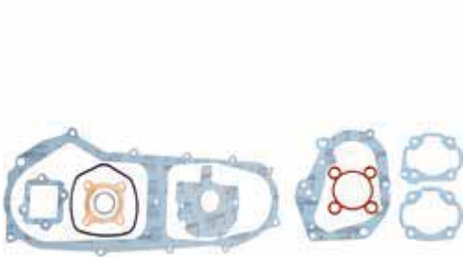

100682500

50: Jog 90-99



100683000

50: CT



100689820

50: Neo's 4T 08-15



100689470

100: Bw'S • Aerox • Neo's





100680341

100680740 NEW

125: X-Max 08-11



100689140

125: Teo's • Maxter 01 • Majesty 98-01

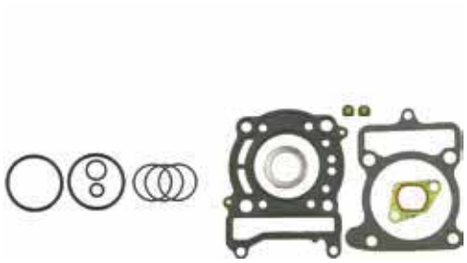

100689810

125: X-Max 06-13

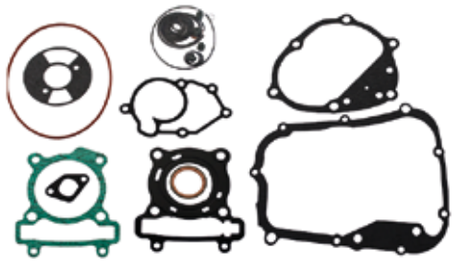

100689851

125: Xenter 12-16 • Majesty S 14
150: Xenter 12-16

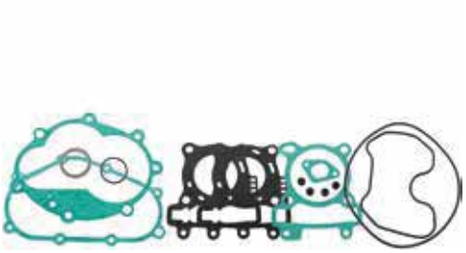

100689151

150: Majesty

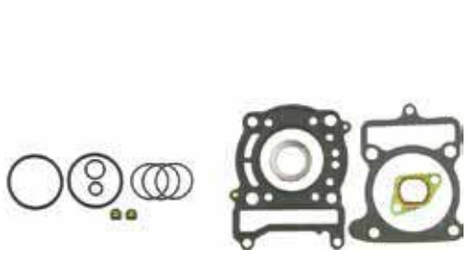

100689531

180: Majesty 03-05



100689160

250: Majesty 96-03 • Majesty Abs 99-03 • X-City 07-08 • X-Max 05-09



100689540

250: X City 09>



100689800

300: Versity 03-06



100689790

400: Majesty 04-06

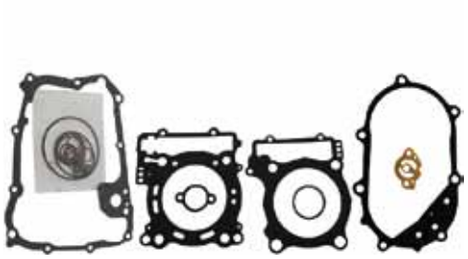

100689861

400: Majesty Abs 07-11 • Majesty 04-11 • X-Max 13-16 • X-Max Abs 14-16



100689520

500: T-Max 01-11

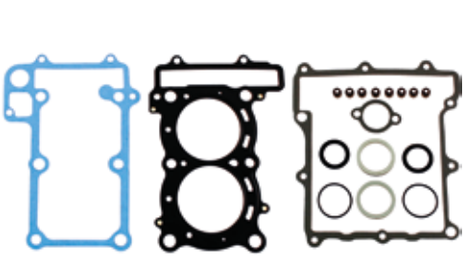

100684300

530: T-Max Abs 12-15 • T-Max 12-15
R.O. 59C114000000

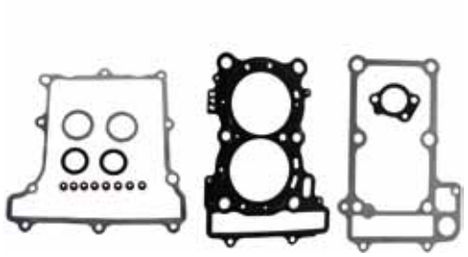

KIT GUARNIZIONI CILINDRI RMS RACING - *RMS BIG BORE CYLINDER GASKET KIT*

100680461

Serie guarnizioni cilindro Yamaha Ø 60,5 mm | *Gasket sets for Yamaha cylinder Ø 60,5 mm*
Per cilindro 100080621 | *For cylinder 100080621*
(Maggiorazione X-Max da 125 a 150 cc) | *(X-Max increase from 125 to 150 cc)*



100689720

Serie guarnizioni per cilindro Piaggio raffreddato ad aria Ø 47 mm | *Gasket sets for Piaggio air cooled Ø 47 mm*
Per cilindro 100080480 | *For cylinder 100080480*



100689730

Serie guarnizioni Minarelli Orizzontale Ø 47 mm | *Gasket sets for Minarelli Horizontal Ø 47 mm*
Per cilindro 100080490 | *For cylinder 100080490*





100689740

Serie guarnizioni per cilindro Minarelli Verticale Ø 47 mm | *Gasket sets for Minarelli vertical Ø 47 mm*
Per cilindro 100080500 | *For cylinder 100080500*

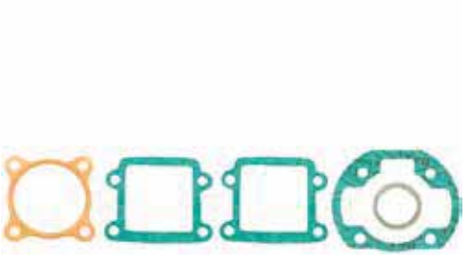

100689750

Serie guarnizioni per cilindro Minarelli liquido Ø 47 mm | *Gasket sets for Minarelli liquid cooled Ø 47 mm*
Per cilindro 100080510 | *For cylinder 100080510*

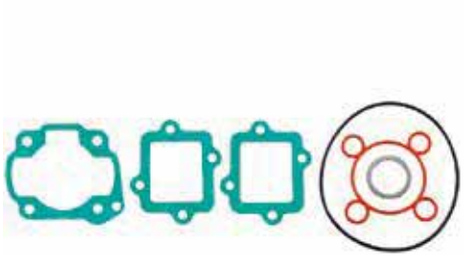

100689760

Serie guarnizioni Piaggio liquido modelli fino al 2000 Ø 47 mm | *Gasket set Piaggio liquid cooled Ø 47 mm < 2000*
Per cilindro 100080560 | *For cylinder 100080560*

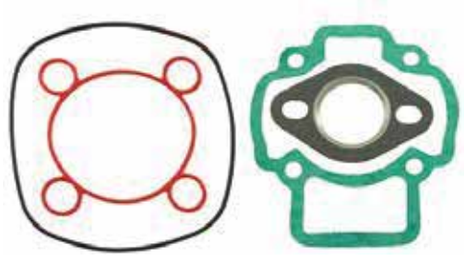

100689770

Serie guarnizioni Piaggio liquido modelli dal 2001 Ø 47 mm | *Gasket set Piaggio liquid cooled Ø 47 mm > 2000*
Per cilindro 100080570 | *For cylinder 100080570*

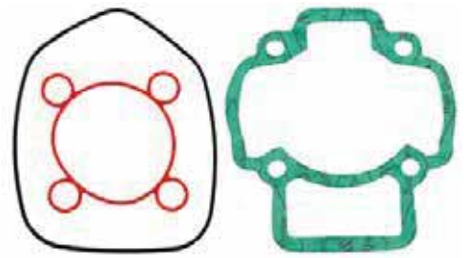

100689840

Serie Guarnizioni Cilindro | *Cylinder Gasket Set*
Per cilindro 100080610 | *For cylinder 100080610*



GUARNIZIONI BASE CILINDRO - *BOTTOM CYLINDER GASKET*

100702010

Confezione 5 Pz. | *5 Pcs Packing*
APRILIA 50: Amico
MBK: Booster 90-95



100702020

Confezione 5 Pz. | *5 Pcs Packing*
MOTORI MINARELLI: CY, MY 50
Raffreddati ad aria - *Air cooled*
APRILIA: SR • Scarabeo • Rally • Gulliver
MBK 50: Evolis



100702030

Confezione 5 Pz. | *5 Pcs Packing*
MOTORI MINARELLI: MA 50
Raffreddati acqua - *Liquid cooled*
APRILIA 50: SR LC
MALAGUTI 50: Phantom LC



100702300

Confezione 5 Pz. | *5 Pcs Packing*

GILERA 50: Typhoon • Storm
PIAGGIO: Sfera • Zip • Free 91-96



100703030

Confezione 5 Pz. | *5 Pcs Packing*

PIAGGIO 50-90-125: Vespa • Primavera ET3 • Ape TM



100703050

Spessore 0,5 mm | *Thickness 0,5 mm*
Confezione 5 Pz. | *5 Pcs Packing*

PIAGGIO 50: Quartz • NRG 95-96



100703080

Confezione 5 Pz. | *5 Pcs Packing*

PIAGGIO: Ape MP Car • Ape MPV • Ape TM 602 • Ape 703



100703090

Confezione 5 Pz. | *5 Pcs Packing*

PIAGGIO 125: Vespa PK XL-VMX6T
R.O.826911



100704000

Confezione 5 Pz. | *5 Pcs Packing*

PIAGGIO 125-150: Vespa PX • Vespa PXE • COSA VLR1T VNX-VLX-VNX2-VLX2



100704010

Confezione 5 Pz. | *5 Pcs Packing*

PIAGGIO 200: Vespa PX • Vespa PXE • Cosa VSR1T
R.O. 191695



100704020

Confezione 5 Pz. | *5 Pcs Packing*

PIAGGIO 150: Vespa GL • Vesap Sprint • Vespa Sprint Veloce
VLA-VLB-VBC
R.O. 89120



GUARNIZIONI TESTA MOTORE - *CYLINDER HEAD GASKETS*

100701010

Confezione 5 Pz. | *5 Pcs Packing*

APRILIA: Amico
MBK: Booster
YAMAHA 50: CT • CR Z 90-95



100701020

Confezione 5 Pz. | *5 Pcs Packing*

APRILIA: SR • Scarabeo • Rally • Gulliver
MBK 50: Evolis
MOTORI MINARELLI 50: CY • MY 93-95
Raffreddati ad aria - *Air cooled*
YAMAHA 50: CY • MY • CH 50 Beluga



GUARNIZIONI CARTER MOTORE - *CLUTCH COVER GASKETS*

100705610

Confezione 5 Pz. | *5 Pcs Packing*

APRILIA 50: SR • Scarabeo • Rally • Gulliver • SR Lc
MALAGUTI: F12 Phantom LC Raffreddati ad acqua
MOTORI MINARELLI: My 50 Raffreddati ad aria • My Raffreddati Acqua 93-95



100706200

Confezione 5 Pz. | *5 Pcs Packing*

PIAGGIO 50: Ape TM
50-90-125: Vespa
50-125: Vespa Primavera ET3 • Vespa PK



100706500

Confezione 5 Pz. | *5 Pcs Packing*

APRILIA 50: Amico • SR • Scarabeo • Rally Gulliver • SR LC
MALAGUTI: F10 • F12 Phantom
Raffreddati ad aria e acqua - *Air and water cooled*
MBK: Booster
MOTORI MINARELLI
YAMAHA 50: CY • MY 90-95



100707120

Flangia portaganasce posteriori | *Rear brake shoes flange*
Confezione 5 Pz. | *5 Pcs Packing*

PIAGGIO 50-125: Vespa Primavera ET3 • Vespa PK
50-90-125: Vespa



100708000

GUARNIZIONE RONDELLE FIBRA | *WASHER FIBRE*
Rondella Ø 8 x 12 x 1 | *Washer Ø 8 x 12 x 1*
Confezione 10 Pz. | *10 Pcs Packing*
R.O. 000397



GUARNIZIONI COLLETTORE ASPIRAZIONE - *INTAKE MANIFOLD GASKETS*

100703520

Confezione 5 Pz. | *5 Pcs Packing*

APRILIA 50: SR • Scarabeo • Rally • Gulliver • SR LC
MALAGUTI 50: F12 Phantom LC • F 10
YAMAHA: CY • MY • MA
MBK 50: Evolis 93-95



100703930

Confezione 5 Pz. | *5 Pcs Packing*

PIAGGIO 50: Ape TM



GUARNIZIONI CARBURATORE - *CARBURETOR GASKETS*

100703950

Confezione 5 Pz. | *5 Pcs Packing*

PIAGGIO 50-90-125: Vespa



100703960

Confezione 5 Pz. | *5 Pcs Packing*

PIAGGIO 50: Vespa PK
R.O. 196431



100709040

Confezione 5 Pz. | *5 Pcs Packing*

PIAGGIO 125: Vespa PX VNX2-VLX1-V5X1
R.O.131079



100709050

Confezione 5 Pz. | *5 Pcs Packing*

PIAGGIO 125: Vespa PX T5 VN5T-VNX2-VLX1-VSX1
R.O. 131115



100709060

Confezione 5 Pz. | *5 Pcs Packing*

PIAGGIO 125-150: Vespa PX T5 VNX2-VLX1-VSX1-VNX5T
R.O. 150131



GUARNIZIONE SCARICO - *EXHAUST GASKET*

100704500

Confezione 5 Pz. | *5 Pcs Packing*

APRILIA 50: Amico • SR • Scarabeo • Rally • Gulliver
MBK 50: Booster • Evolis 90-95



100704510

Confezione 5 Pz. | *5 Pcs Packing*

APRILIA: SR • Scarabeo



100704520

Confezione 5 Pz. | *5 Pcs Packing*

APRILIA 50: SR LC
MOTORI FRANCO MORINI 50: AH L
ITALJET: Formula
MALAGUTI 50: Crosser • Phantom LC
Raffreddati Acqua - *Liquid cooled*
SUZUKI 50: 94-95



100705010

Confezione 5 Pz. | *5 Pcs Packing*

KYMCO 50: Djy
PEUGEOT 50: Buxy • Speedake • Squab • SV Geo • Zenith
HONDA 50: Pk Wallaroo • GP • SP • HSS • Dio • SK • SA • SJ Bali 94-95



100705100

Confezione 5 Pz. | *5 Pcs Packing*

PIAGGIO 50: Vespa • Vespa PK XL • Vespa Rush
Ø 6 mm



100705111

Confezione 5 Pz. | *5 Pcs Packing*

PIAGGIO 50-125: Vespa Primavera ET3
50: Vespa PK • Ape TM
Ø 8 mm



100705120

Confezione 5 Pz. | *5 Pcs Packing*

PIAGGIO 125: Vespa PK XL



100705130

Confezione 5 Pz. | *5 Pcs Packing*

PIAGGIO: Sfera • Free • Zip • Fast Rider 91-93



100705140

Confezione 5 Pz. | *5 Pcs Packing*

PIAGGIO: NRG • NTT • Quartz
GILERA: Typhoon 91-93



100705150

Confezione 5 Pz. | *5 Pcs Packing*

PIAGGIO: Zip • Quartz
GILERA: Typhoon • Storm 91-93



100705160

PIAGGIO 125-180-200-250-300: Motori 4T - *Four Stroke Engine*
R.O. 8263885



100705320

Confezione 5 Pz. | *5 Pcs Packing*

PIAGGIO: Ape Car TM



GUARNIZIONI SERBATOIO BENZINA - *FUEL CAP GASKETS*

121830300

Confezione 5 Pz. | *5 Pcs Packing*

PIAGGIO 125-150-200: Vespa PX • Vespa P
VN1-VN2-VNA-VNB-VNX-VLX-VBX -T5 VNX5T
R.O. 002319



121830370

Confezione 5 Pz. | *5 Pcs Packing*

PIAGGIO 50-90-125: Vespa Primavera ET3
V5A1-V5B1-V5B2-V5SA1-V9A1-VMA2-VMB1
R.O. 071734



121830650

PIAGGIO 125-150-200: Vespa PX
VNX-VLX-VSX
R.O. 159804



121830660

PIAGGIO 125: Vespa 48-52
R.O. 003979



121830670

PIAGGIO 125: Vespa 53-54
R.O. 016704



121830680

PIAGGIO 125-150: Vespa 55-57
R.O. 028231



121830690

Guarnizione tappo benzina sughero | *Cork Gasket fuel cap*
Confezione 5 Pz. | *5 Pcs Packing*

PIAGGIO 50-90-125: Vespa Primavera ET3
V5A1-V5B1-V5B2-V5SA1-V9A1-VMA2-VMB1-VNA-VNB



121830700

Guarnizione tappo benzina sughero | *Cork Gasket fuel cap*
Confezione 5 Pz. | *5 Pcs Packing*

PIAGGIO 125-150-200: Vespa PX
V5A1-V5B1- V5B2-V5SA1-V9A1-VMA2-VMB1-VNA-VNB



GUARNIZIONI RUBINETTO BENZINA - *FUEL TAP GASKET*

121830530

Confezione 5 Pz. | *5 Pcs Packing*

PIAGGIO 50-90-125: Vespa Primavera ET3 • Vespa GL 150 • Vespa GS 160 • Vespa GS 180 SS
V5A-V5A1T-V5SS1T-V9A1T-V9SS1T-V33TVM1/2T-VU1T-VN1/2T-VNA1T-VNB1/2/3/4/5/-VNC1T-VMA1T-VNL2T-VB1T-VBA1-VBB1TVBC-VLA1T- VS1T-VSB1T-VSC1T
R.O. 13836



121830710

Confezione 5 Pz. | *5 Pcs Packing*

PIAGGIO 50-90-125: Vespa Primavera ET3
V5A1-V5B1-V5B2-V5SA1-V9A1-VMA2-VMB1- VNA-VNB



121830720

Confezione 5 Pz. | *5 Pcs Packing*

PIAGGIO 125-150-200: Vespa PX
VNX-VLX-VSX



GUARNIZIONI CILINDRETTO FRENO - *BRAKE CYLINDER GASKETS*

225140010

Anteriore | *Front*
Kit 4 Pz. | *4 Pcs Kit*

PIAGGIO: Ape MP



225140020

Anteriore | *Front*
Kit 4 Pz. | *4 Pcs Kit*

PIAGGIO: Ape TMP 602



225140030

Posteriore | *Rear*
Kit 8 Pz. | *8 Pcs Kit*

PIAGGIO: Ape 50



225140040

Posteriore | *Rear*
Kit 8 Pz. | *8 Pcs Kit*
PIAGGIO: Ape MP-MPR-MPV



225140050

Posteriore | *Rear*
Kit 8 Pz. | *8 Pcs Kit*
PIAGGIO: Ape TM P602



GUARNIZIONI POMPA FRENO - *MASTER BRAKE CYLINDER GASKETS*

225130010

PIAGGIO 50: Ape



225130020

PIAGGIO 220: Ape MP



225130030

PIAGGIO 220: Ape TM P602-TM P703



GUARNIZIONI CAMBIO - *GEAR SELECTOR GASKETS*

100703980

Confezione 5 Pz. | *5 Pcs Packing*
PIAGGIO 125-200: Vespa PX
150: Vespa PX • Vespa PXE T5 GL • Vespa Sprint • Vespa Super • Vespa Rally
VNX-VLX-VBX-VNX5T-VNX2-VLX2-VSX1-VLA-VLB-VBC
R.O. 47162



GUARNIZIONI CLACSON - *HORN GASKETS*

121830430

Confezione 5 Pz. | *5 Pcs Packing*

PIAGGIO 125: Vespa Primavera VMA2
R.O. 120798



121830431

Confezione 5 Pz. | *5 Pcs Packing*

PIAGGIO 50: Vespa N-L-R V5A1T
R.O. 92468



GUARNIZIONI FILTRO - *FILTER GASKETS*

100703970

Confezione 5 Pz. | *5 Pcs Packing*

PIAGGIO 50-90: Vespa
V5A1-V5B1-V5B2-V5SA1-V9A1
R.O. 79900





Misure *Size*	**Codice RMS** *RMS Code*		**Codice a Barre** *Barcode*	**Descrizione** *Description*	**Applicazioni** *Applications*	**OEM**
8-16-10/11	**100660050**			Pompa Acqua | *Water Pump*	Aprilia-Piaggio-Gilera 50 cc	4352035
10-18-4	**100660200**			Pompa Acqua | *Water Pump*	Motori Minarelli - Aprilia - Malaguti	-
15-24-5	**100660400**			Albero Motore | *Crankshaft*	Piaggio: Ciao - Si - Bravo - Boss	480464
15.6-25.5-7	**100660600**			Albero Motore | *Crankshaft*	Peugeot Kymco 50 cc	711824 0109018
17-27-6	**100660780**			Albero Motore Lato Volano | *Flywheel Side*	Motori F. Morini Malaguti 50 cc	60118400
17-28-5.5	**100660870**			Puleggia Fissa - Albero Primario | *Fixed Pulley - Drive Shaft*	Mbk-Yamaha-Malaguti	931021734200 75311700
17-35-8	**100661090**			Albero Motore Lato Volano | *Flywheel Side*	Fbm	-
18-28-7	**100661400**			Albero Motore Lato Volano | *Flywheel Side*	Aprilia-Piaggio-Gilera 50 cc	482315
18-28-7	**100661420** **Viton**			Albero Motore Lato Volano | *Flywheel Side*	Aprilia-Piaggio-Gilera 50 cc	482315
19-30-7	**100661600**			Albero Motore Lato Frizione | *Clutch Side*	Aprilia-Piaggio-Gilera 50 cc	482314
19-30-7	**100661610** **Viton**			Albero Motore Lato Frizione | *Clutch Side*	Aprilia-Piaggio-Gilera 50 cc	482314
19-32-7	**100661700**			Albero Motore Lato Volano | *Flywheel Side*	Piaggio Vespa	430390 - 155579
19-32-7	**100661710** **Blue**			Albero Motore Lato Volano | *Flywheel Side*	Piaggio Vespa	430390 - 155579
19 - 32 -7	**100661712** ROLF			Albero Motore Lato Volano | *Flywheel Side*	Piaggio Vespa 50-90 Primavera Et3 V5a1-V5b1-V5b2-V5sa1-V9a1-Vma2-Vmb1	155579
20 - 30 -7	**100661850**			Albero Motore Lato Frizione | *Clutch Side*	Peugeot	706450
20 - 30 - 7	**100661860** **Viton**			Albero Motore Lato Volano | *Flywheel Side*	Piaggio 125 4T: Fly - Liberty - Vespa150 4T: Liberty-Vespa	82898R
20 -30/33.5-6	**100661900**			Albero Motore Lato Volano | *Flywheel Side*	Motori Minarelli Aprilia-Mbk -Yamaha	AP8206212 931012013800
20-31-7	**100661950** **Viton**			Albero Motore Lato Frizione | *Clutch Side*	Kymco 50 2T	00109139
20 -32 -7	**100662000**			Albero Motore Lato Volano | *Flywheel Side*	Paiggio Ape-Vespa 50	289306
20 -32 -7	**100662020** **Blue**			Albero Motore Lato Volano | *Flywheel Side*	Piaggio Vespa 50 Pk XL-N-FL Vn5x3T-V5x5-V5N1	289306
20 - 32 - 7	**100662202** ROLF			Albero Motore Lato Volano | *Flywheel Side*	Piaggio Vespa 50 Pk XL-N-FL Vn5x3T-V5x5-V5N1	289306
20 - 32 - 7	**100662010** **Viton**			Albero Trasmissione | *Drive shaft*	Piaggio 125 4T: Beverly-Carnaby-Fly-Liberty-Mp3-Typhoon-Vespa	82878R
20 - 40 - 6	**100662110** **Blue**			Albero Motore Lato Volano | *Flywheel Side*	Piaggio Vespa 125 VN1/VN2/VNA/VNB Vespa 150 GS - Super Sport VSB1/VSC1	025180
20 - 40 - 6	**100662370** ROLF			Albero Motore Lato Volano | *Flywheel Side*	Piaggio Vespa 150 GL-Sprint-Super VLA-VLB-VBC Rally	084644
20-42-8/9	**100662300**			Albero Motore Lato Frizione | *Clutch Side*	Motori Minarelli- Aprilia-Mbk-Yamaha	AP8206213 931022037100
20-62-6,5	**100662360**			Albero Motore Lato Frizione | *Clutch Side*	Vespa Sprint - Gl150	048290
20 - 62 - 6,5	**100662390** **Blue**			Albero Motore Lato Frizione | *Clutch Side*	Vespa Sprint - Gl150	048290
20.8-53-6/9	**100662380**			Albero Motore | *Crankshaft*	Honda Sh 125-150	-
22-32-7	**100662430**			Semiasse | *Half Shaft*	Piaggio Ape Mp-Car	431044
22 - 34 - 6	**100662490**			Albero Ruota Posteriore | *Rear Wheel Shaft*	Kymco 250 People Lc 03-04 • People S 06• Xciting 05-07 • 300: Xciting 08-09	00125780
22 - 35 - 6	**100662550**			Ruota Posteriore | *Rear Wheel*	Piaggio Ciao I Serie	58752
22 - 45 - 7	**100662650**			Applicazioni Varie | *Various*	Applicazioni Varie	-



Misure *Size*	Codice RMS *RMS Code*		Codice a Barre *Barcode*	Descrizione *Description*	Applicazioni *Applications*	OEM
22.7-47-7/7.5	**100662700**			Albero Motore Lato Frizione | *Clutch Side*	Piaggio Vespa 50-125 Primavera	289305
22.7 - 47 -7/7.5	**100662710 Blue**			Albero Motore Lato Frizione | *Clutch Side*	Piaggio Vespa 50-125 Primavera	289305
22,7 - 47-7/7,5	**100662702 ROLF**			Albero Motore Lato Frizione | *Clutch Side*	Piaggio Vespa 50-90 Primavera Et3 V5a1-V5b1-V5b2-V5sa1-V9a1-Vma2-Vmb1	008731
24 - 35 - 6	**100663000**			Albero Motore Lato Volano | *Flywheel Side*	Piaggio Vespa Pk 125 Xl-Px	431121
24 - 35 - 6	**100663010 Blue**			Albero Motore Lato Volano | *Flywheel Side*	Piaggio Vespa Pk 125 Xl-Px	431121
24 - 35 - 7	**100663050**			Albero Motore | *Crankshaft*	Gilera - Piaggio Hexagon Skipper 125	4345826
24.9 - 45 -5.5/6.5	**100663400**			Albero Motore Lato Volano Esterno | *Flywheel External*	Piaggio Ape Mp-P601 I Serie	078002
24.9 - 45 -5.5/6.5	**100663450**			Albero Motore Lato Volano Esterno | *Flywheel External*	Piaggio Ape Mp-P601 I Serie	078002
25 - 37 - 6	**100663600**			Albero Motore Lato Frizione | *Clutch Side*	F.Morini Malaguti	60118500
25 - 40 - 8	**100664000**			Albero Motore Lato Frizione | *Clutch Side*	Kymco 125 -150 B&w Eu2 • Dink ClassicDink • 500 Xciting I/R 05-09	00121912
27 - 37 - 7	**100664500**			Albero Ruota Posteriore | *Rear Wheel Shaft*	Piaggio Vespa 50-Et3-Pk-Gl-Sprint	046699
27 - 37 - 7	**100664510 Blue**			Albero Ruota Posteriore | *Rear Wheel Shaft*	Piaggio Vespa 50-Et3-Pk-Gl-Sprint	046699
27 - 42 - 10	**100664700**			Ruota Posteriore | *Rear Wheel*	Piaggio Ape 50	118058
27 - 42 - 10	**100664710 Blue**			Ruota Posteriore | *Rear Wheel*	Piaggio Ape 50	118058
27 - 42 - 7	**100664550**			Ruota Posteriore | *Rear Wheel*	Kymco 50Agility 4TR10/R12/R16Agility 2T R16 • 125 Agility Rs • Agility R16250-300 People S Xciting	00108209
27 - 47 - 6	**100664800**			Ruota Posteriore | *Rear Wheel*	Piaggio Vespa Px	130536
27 - 47 - 6	**100664802 ROLF**			Ruota Posteriore | *Rear Wheel*	Piaggio Vespa Px 125-150-200 1 Serie-Vespa GL 150 Sprint-Rally	130536
27 - 47 - 6	**100664810 Blue**			Ruota Posteriore | *Rear Wheel*	Piaggio Vespa Px 125-150-200 1 Serie-Vespa GL 150 Sprint-Rally	130536
30 - 45 - 5	**100665400**	NEW		Albero Motore | *Crankshaft*	Yamaha Majesty 250	-
30 - 47 - 6	**100665500**			Albero Ruota Posteriore | *Rear Wheel Shaft*	Piaggio Vespa Px-Sfera-Zip- Et4 Gilera Runner - Stalker - Typhoon	478498 - 008714
30 - 47 - 6	**100665510 Blue**			Albero Ruota Posteriore | *Rear Wheel Shaft*	Piaggio Vespa Px-Sfera-Zip- Et4 Gilera Runner - Stalker - Typhoon	008714
30 - 62 - 6,5	**100662362 ROLF**			Albero Motore Lato Frizione | *Clutch Side*	Piaggio 150 GL-Sprint-Super VLA-VLB-VBC	049290
31- 62-4.3/5.8	**100666000**			Albero Motore Lato Frizione | *Clutch Side*	Piaggio Vespa Arcobaleno - Px	431122 - 131102
31- 62-4.3/5.8	**100666010**			Albero Motore Lato Frizione **Struttura metallo** | *Clutch Side Metal frame*	Piaggio Vespa Arcobaleno - Px	242550
31 - 62 - 4,3	**100666020 Blue**			Albero Motore Lato Frizione | *Clutch Side*	Piaggio Vespa Arcobaleno - Px	433122
40 - 47 - 4	**100668500**			Puleggia Frizione posteriore mobile | *Pulley*	Piaggio: Sfera-Zip	478269
41 - 48 - 4	**100669100 TC4**			Puleggia Frizione posteriore mobile | *Pulley*	Piaggio Vespa ET4	-

SET PARAOLI - *OIL SEALS SET*
APRILIA

100641010

50: Amico SR 94
Motori Minarelli MY Raffreddati ad aria | *Minarelli engine MY aircooled*
Motori Minarelli MA Raffreddati a liquido | *Minarelli engine MA liquid cooled*

Composizione *Composition*	**Misure** *Measures*	**Q.tà**	**Codice RMS** *RMS Code*
Albero motore lato volano - *Flywheel side*	20x30/33.5x5.3/6	1	**100661900**
Statore volano - *Flywheel*	19x26x5	1	-
Albero motore lato frizione - *Clutch side*	20x42/43x8/9	1	**100662300**
Albero primario - *Drive shaft*	17x28x5.5	1	**100660870**
Puleggia frizione posteriore mobile - *Rear Pulley*	33x39x4	2	-
Albero trasmissione ruota posteriore - *Rear wheel shaft*	22x32x6	1	-
O-Ring motorino avviamento - *Starter Motor*	21.95x1.78	1	-
O-Ring puleggia frizione posteriore mobile - *Rear Pulley*	37.82x1.78	2	-
O-Ring tappo olio motore - *Oil tank*	13.8x2.4	1	-
Ruota anteriore - *Front wheel*	40x52x6	1	-
Ruota anteriore - *Front wheel*	20x35x7/11	1	-

GILERA

100640020

50: Stalker • Runner

Composizione *Composition*	**Misure** *Measures*	**Q.tà**	**Codice RMS** *RMS Code*
Albero motore lato volano - *Flywheel side*	18x28x7	1	**100661400**
Albero motore lato frizione - *Clutch side*	19x30x7	1	**100661600**
Puleggia frizione posteriore mobile - *Rear Pulley*	34x39x3	2	-
Albero primario - *Drive shaft*	17x28x5	1	-
Albero ruota posteriore - *Rear wheel shaft*	30x47x6	1	**100665500**
O-Ring puleggia frizione posteriore mobile - *Rear Pulley*	39,5x2	2	-
O-Ring frizione anteriore - *Front teat pulley*	88,62x1,78	1	-
O-Ring tappo olio - *O-Ring Oil*	11x1,9	1	-

MALAGUTI

100641010

50: F10 • F12 Phantom • Centro SL Raffreddamento Aria • F15 Raffraddamento Acqua

Composizione *Composition*	**Misure** *Measures*	**Q.tà**	**Codice RMS** *RMS Code*
Albero motore lato volano - *Flywheel side*	20x30/33.5x5.3/6	1	**100661900**
Statore volano - *Flywheel*	19x26x5	1	-
Albero motore lato frizione - *Clutch side*	20x42/43x8/9	1	**100662300**
Albero primario - *Drive shaft*	17x28x5.5	1	**100660870**
Puleggia frizione posteriore mobile - *Rear Pulley*	33x39x4	2	-
Albero trasmissione ruota posteriore - *Rear wheel shaft*	22x32x6	1	-
O-Ring motorino avviamento - *Starter Motor*	21.95x1.78	1	-
O-Ring puleggia frizione posteriore mobile - *Rear Pulley*	37.82x1.78	2	-
O-Ring tappo olio motore - *Oil tank*	13.8x2.4	1	-
Ruota anteriore - *Front wheel*	40x52x6	1	-
Ruota anteriore - *Front wheel*	20x35x7/11	1	-

MBK

100641010

50: Booster

Composizione *Composition*	**Misure** *Measures*	**Q.tà**	**Codice RMS** *RMS Code*
Albero motore lato volano - *Flywheel side*	20x30/33.5x5.3/6	1	**100661900**
Statore volano - *Flywheel*	19x26x5	1	-
Albero motore lato frizione - *Clutch side*	20x42/43x8/9	1	**100662300**
Albero primario - *Drive shaft*	17x28x5.5	1	**100660870**
Puleggia frizione posteriore mobile - *Rear Pulley*	33x39x4	2	-
Albero trasmissione ruota posteriore - *Rear wheel shaft*	22x32x6	1	-
O-Ring motorino avviamento - *Starter Motor*	21.95x1.78	1	-
O-Ring puleggia frizione posteriore mobile - *Rear Pulley*	37.82x1.78	2	-
O-Ring tappo olio motore - *Oil tank*	13.8x2.4	1	-
Ruota anteriore - *Front wheel*	40x52x6	1	-
Ruota anteriore - *Front wheel*	20x35x7/11	1	-



PIAGGIO

100640010

50: Vespa ET2

Composizione *Composition*	Misure *Measures*	Q.tà	Codice RMS *RMS Code*
Albero motore lato volano - *Flywheel side*	18x28x7	1	**100661400**
Albero motore lato frizione - *Clutch side*	19x30x7	1	**100661600**
Puleggia frizione posteriore mobile - *Rear Pulley*	34x39x3	2	-
Albero primario - *Drive shaft*	22x40x7	1	-
Albero ruota posteriore - *Rear wheel shaft*	30x47x6	1	**100665500**
O-Ring puleggia frizione posteriore mobile - *Rear Pulley*	39,5x2	2	-
O-Ring frizione anteriore - *Front teat pulley*	77,5x1,5	1	-

100640060

50: Zip 93-95 • Free 92 • Quartz 92 • Sfera • NRG • NTT

Composizione *Composition*	Misure *Measures*	Q.tà	Codice RMS *RMS Code*
Albero motore lato volano - *Flywheel side*	18x28x7	1	**100661400**
Albero motore lato frizione - *Clutch side*	19x30x7	1	**100661600**
Puleggia frizione posteriore mobile - *Rear Pulley*	34x39x3	2	-
Albero primario - *Drive shaft*	22X40X7	1	-
Albero ruota posteriore - *Rear wheel shaft*	30x47x6	1	**100665500**
Albero pompa acqua - *Water Pump shaft*	8x16x10/11	1	**100660050**
O-Ring puleggia frizione posteriore mobile - *Rear Pulley*		2	-
O-Ring frizione anteriore - *Front teat pulley*		1	-

100640100

125: Vespa ET4

Composizione *Composition*	Misure *Measures*	Q.tà	Codice RMS *RMS Code*
Albero motore lato volano - *Flywheel side*	18x28x7	1	**100661400**
Albero motore lato frizione - *Clutch side*	22x32x7	1	**100662430**
Albero primario - *Drive shaft*	22.7x47.05x7.5/7	1	-
Albero ruota posteriore - *Rear wheel shaft*	30x47x6	1	**100665500**
O-Ring filtro olio - *Oil Filter*		1	-
O-Ring raccordo filtro olio - *Oil Filter Connection*		1	-
O-Ring coperchio pompa olio - *Oil Pump Cover*		1	-
O-Ring puleggia frizione posteriore fissa - *Rear Pulley*		1	-
O-Ring filtro olio - *Oil Filter*		2	-
O-Ring frizione anteriore - *Front teat pulley*		1	-
O-Ring tappo introduzione olio - *Oil tank*		1	-

100640140

150: Vespa GL • Vespa Sprint

Composizione *Composition*	Misure *Measures*	Q.tà	Codice RMS *RMS Code*
Albero motore lato frizione - *Clutch side* - *Clutch side*	20x40/60x56	1	-
Albero motore lato volano - *Flywheel side*	20x62x6,5	1	**100662360**
Albero ruota posteriore - *Rear wheel shaft*	27x37x7	1	**100664500**

100640160

125-150: Vespa PX TS
200: PE

Composizione *Composition*	Misure *Measures*	Q.tà	Codice RMS *RMS Code*
Albero motore lato volano - *Flywheel side*	24x35x6	1	**100663000**
Albero motore lato frizione - *Clutch side*	31x62x4.3/5.8	1	**100666060**
Albero ruota posteriore - *Rear wheel shaft*	27x47x6	1	**100664800**

100640170

125-150-200: Vespa PX • Vespa PE Arcobaleno

Composizione *Composition*	Misure *Measures*	Q.tà	Codice RMS *RMS Code*
Albero motore lato volano - *Flywheel side*	24x35x6	1	**100663000**
Albero motore lato frizione - *Clutch side*	31x62x4.3/5.8	1	**100666000**
Albero ruota posteriore - *Rear wheel shaft*	30x47x6	1	**100665500**

100640180

125: Vespa T5 Cosa

Composizione *Composition*	Misure *Measures*	Q.tà	Codice RMS *RMS Code*
Albero motore lato volano - *Flywheel side*	24x35x6	1	**100663000**
Albero motore lato frizione - *Clutch side*	31x62x4.3/5.8	1	**100666000**
Albero ruota posteriore - *Rear wheel shaft*	27x42x10	1	**100664700**

100640250

125-150-200: Vespa PX Arcobaleno

Composizione *Composition*	Misure *Measures*	Q.tà	Codice RMS *RMS Code*
Albero motore lato volano - *Flywheel side*	24x35x6	1	**100663000**
Albero motore lato frizione struttura metallo - *Clutch side metal frame*	31x62x4,3/5/8	1	**100666010**
Albero ruota posteriore - *Rear wheel shaft*	30x47x6	1	**100665500**

100640260

Blue

125-150-200: Vespa PX Arcobaleno

Composizione *Composition*	Misure *Measures*	Q.tà	Codice RMS *RMS Code*
Albero motore lato volano - *Flywheel side*	24x35x6	1	-
Albero motore lato frizione struttura metallo - *Clutch side metal frame*	31x62x4,3/5/8	1	-
Albero ruota posteriore - *Rear wheel shaft*	27x47x6	1	-

100640270

Blue

125-150-200: Vespa PX Arcobaleno

Composizione *Composition*	Misure *Measures*	Q.tà	Codice RMS *RMS Code*
Albero motore lato volano - *Flywheel side*	24x35x6	1	-
Albero motore lato frizione struttura metallo - *Clutch side metal frame*	31x62x4,3/5/8	1	-
Albero ruota posteriore - *Rear wheel shaft*	30x47x6	1	-

YAMAHA

100641080

Motori Minarelli: Scooter 50

Composizione *Composition*	Misure *Measures*	Q.tà	Codice RMS *RMS Code*
Paraolio doppia tenuta - *Oil Seal special watertight* - *Oil Seal special watertight*	10-18-5/8	1	-
Anelli O-Ring	53,7x1,78	1	-



PARAOLI VALVOLE - *VALVES OIL SEALS*

Modello *Model*	CC	Da *From*	A *To*	OEM	Codice RMS *RMS Code*
APRILIA					
Scarabeo 4T	50	2002	2006	AP8550326	**100669210**
Scarabeo 4T 4V	50	2010	2012	843307	**100669200**
Scarabeo 4T 4V	50	2014	2017	843307	**100669200**
Scarabeo 4T 4V Net	50	2009	2010	843307	**100669200**
Scarabeo 4T Restyling Eu3	50	2006	2009	436438	**100669210**
Scarabeo Quattro	50	2009	2009	843307	**100669200**
Sport City One 4T	50	2008	2010	436438	**100669210**
Sr Motard 4T 4V	50	2013	2019	843307	**100669200**
Scarabeo 4T	100	2001	2005	AP8550326	**100669210**
Scarabeo 4T	100	2010	2012	436438	**100669210**
Scarabeo 4T	100	2014	2014	436438	**100669210**
Scarabeo 4T Net	100	2009	2009	436438	**100669210**
Scarabeo 4T Net Eu3	100	2010	2010	436438	**100669210**
Scarabeo 4T Restyling	100	2006	2009	436438	**100669210**
Atlantic	125	2003	2005	AP8550326	**100669210**
Atlantic Eu3	125	2010	2012	436438	**100669210**
Atlantic Eu3 125-250	125	2006	2008	AP8550326	**100669210**
Leonardo	125	1996	2002	AP0650120	**100669230**
Leonardo St	125	2001	2004	AP0650120	**100669230**
Mojito	125	2003	2007	AP8550326	**100669210**
Mojito	125	2008	2008	436438	**100669210**
Mojito Retro' - Custom	125	1999	2001	AP8550326	**100669210**
Scarabeo	125	2003	2006	AP8550326	**100669210**
Scarabeo Motore Piaggio Eu3	125	2006	2006	AP8550326	**100669210**
Scarabeo Motore Rotax	125	1999	2004	AP0650120	**100669230**
Sport City	125	2004	2006	AP8550326	**100669210**
Sport City Cube	125	2008	2010	436438	**100669210**
Sport City Euro3	125	2006	2008	AP8550326	**100669210**
Sport City One 4T Euro3	125	2008	2011	436438	**100669210**
Sport City Street	125	2012	2012	436438	**100669210**
Sr Max	125	2011	2014	436438	**100669210**
Sr Motard	125	2012	2014	436438	**100669210**
Atlantic Eu3 125-250	250	2006	2008	AP8550326	**100669210**
Leonardo	250	1999	2001	AP8122606	**100669220**
Leonardo	250	2002	2004	AP8552065	**100669220**
Leonardo St	250	2001	2001	AP8122606	**100669220**
Scarabeo Light	250	2006	2008	AP8550326	**100669210**
Sport City Cube	250	2008	2012	436438	**100669210**
Atlantic	300	2010	2012	436438	**100669210**
Scarabeo Light	300	2009	2010	436438	**100669210**
Sport City Street	300	2012	2012	436438	**100669210**
Sr Max	300	2011	2014	436438	**100669210**
Atlantic Sprint 400-500	400	2005	2008	AP8550326	**100669210**
Scarabeo Light 400-500	400	2006	2008	436438	**100669210**
Mxv	450	2008	2011	AP9150104	**100669240**
Rxv 4.5/5.5	450	2009	2011	AP9150104	**100669240**
Rxv 4.5/5.5 - Sxv 4.5/5.5	450	2006	2008	AP9150104	**100669240**
Rxv 4.5/5.5 - Sxv 4.5/5.5 Pikes Peak	450	2009	2009	AP9150104	**100669240**
Rxv 4.5/5.5 - Sxv 4.5/5.5 Replica	450	2008	2008	AP9150104	**100669240**
Sxv 4.5/5.5	450	2009	2011	AP9150104	**100669240**
Atlantic	500	2001	2004	AP8550326	**100669210**
Atlantic Sprint 400-500	500	2005	2008	AP8550326	**100669210**
Scarabeo	500	2003	2006	AP8550326	**100669210**
Scarabeo Light 400-500	500	2006	2008	436438	**100669210**
Rxv 4.5/5.5	550	2009	2011	AP9150104	**100669240**
Rxv 4.5/5.5 - Sxv 4.5/5.5	550	2006	2008	AP9150104	**100669240**
Rxv 4.5/5.5 - Sxv 4.5/5.5 Pikes Peak	550	2009	2009	AP9150104	**100669240**
Rxv 4.5/5.5 - Sxv 4.5/5.5 Replica	550	2008	2008	AP9150104	**100669240**
Sxv 4.5/5.5	550	2009	2011	AP9150104	**100669240**
Pegaso Strada(Fun)-Factory-Trail	660	2005	2009	AP8122606	**100669220**
Dorsoduro	750	2008	2016	436438	**100669210**
Dorsoduro Factory	750	2010	2013	436438	**100669210**
Shiver	750	2007	2016	436438	**100669210**
Shiver Gt	750	2009	2009	436438	**100669210**
Mana	850	2007	2011	436438	**100669210**
Mana Gt	850	2009	2016	436438	**100669210**
Srv - Srv Abs Atc	850	2012	2014	436438	**100669210**
Dorsoduro	900	2017	2017	436438	**100669210**
Dorsoduro Euro 4 Abs	900	2018	2018	436438	**100669210**
Shiver	900	2017	2018	436438	**100669210**
Rsv4 Aprc R	1000	2011	2012	436438	**100669210**
Rsv4 Aprc R Abs	1000	2013	2014	436438	**100669210**
Rsv4 Factory - Sbk Racing	1000	2009	2010	436438	**100669210**
Rsv4 Factory Aprc Abs	1000	2013	2014	436438	**100669210**
Rsv4 Factory Aprc Std - Se	1000	2011	2012	436438	**100669210**
Rsv4 R	1000	2009	2010	436438	**100669210**
Rsv4 Racing Factory Abs	1000	2018	2018	436438	**100669210**
Rsv4 Racing Factory Le	1000	2015	2017	436438	**100669210**
Rsv4 Rr	1000	2015	2018	436438	**100669210**
Rsv4 Rr Euro 4 Abs	1000	2019	2019	436438	**100669210**
Rsv4 Rr Racer Pack	1000	2015	2015	436438	**100669210**
Tuono V4 R Aprc Abs	1000	2014	2014	436438	**100669210**
Tuono V4 R Std - Aprc	1000	2011	2013	436438	**100669210**
Rsv4 Racing Factory Euro 4 Abs	1100	2019	2019	436438	**100669210**
Tuono V4 Factory	1100	2015	2017	436438	**100669210**
Tuono V4 Factory Superpole Euro 4	1100	2019	2019	436438	**100669210**
Tuono V4 Rf Abs	1100	2018	2018	436438	**100669210**
Tuono V4 Rr	1100	2015	2018	436438	**100669210**
Tuono V4 Rr Euro 4 Abs	1100	2019	2019	436438	**100669210**
BENELLI					
Adiva 125-150	125	2001	2002	R13441541A0	**100669210**
Adiva 125-150	150	2001	2002	R13441541A0	**100669210**
Velvet	250	1999	2001	R15040161A0	**100669220**
Velvet Touring	250	2002	2003	R15040161A0	**100669220**
BMW					
C 600 Sport Abs	600	2012	2015	-	**100669260**
C 600 Sport Edition Abs	600	2014	2015	-	**100669260**
C 650 Gt Abs	650	2012	2018	-	**100669260**
C 650 Gt Edition Abs	650	2014	2015	-	**100669260**
C 650 Sport Abs	650	2016	2018	-	**100669260**
G 650 Gs	650	2011	2012	-	**100669210**
G 650 Gs Abs	650	2012	2016	-	**100669210**
G 650 Gs Sertão	650	2012	2012	-	**100669210**
G 650 Gs Sertão Abs	650	2012	2014	-	**100669210**



Modello *Model*	CC	Da *From*	A *To*	OEM	Codice RMS *RMS Code*
DERBI					
Atlantis 4T Eu2	50	2007	2007	436438	**100669210**
Atlantis 50-100 4T	50	2004	2006	436438	**100669210**
Boulevard 4T Eu2 25 Km/h	50	2009	2009	436438	**100669210**
Atlantis 50-100 4T	100	2004	2006	436438	**100669210**
Boulevard 4T	100	2010	2011	436438	**100669210**
Boulevard 125-150	125	2002	2004	436438	**100669210**
Boulevard 125-150 Eu2	125	2004	2007	436438	**100669210**
Boulevard 4T Eu3	125	2008	2012	436438	**100669210**
Gp1 Eu2	125	2006	2006	436438	**100669210**
Gp1 Low Seat 125 Eu3	125	2007	2008	436438	**100669210**
Rambla 125-250	125	2008	2009	436438	**100669210**
Rambla 125-250 E3 2Ver	125	2008	2008	436438	**100669210**
Sonar 4T	125	2009	2011	436438	**100669210**
Variant Sport 4T E3	125	2012	2012	436438	**100669210**
Boulevard 125-150	150	2002	2004	436438	**100669210**
Boulevard 125-150 Eu2	150	2004	2007	436438	**100669210**
Boulevard 4T E3	150	2010	2010	436438	**100669210**
Boulevard Eu2	200	2005	2006	436438	**100669210**
Gp1	250	2006	2007	436438	**100669210**
Gp1 Low Seat 250 Eu3	250	2007	2008	436438	**100669210**
Rambla 125-250	250	2008	2009	436438	**100669210**
Rambla 125-250 E3 2Ver	250	2008	2008	436438	**100669210**
Rambla	300	2010	2011	436438	**100669210**
Mulhacen Eu2 - Cafe' Eu3 - Nieto Eu3	660	2006	2008	862305	**100669220**
GILERA					
Dna 125-180	125	2001	2001	436438	**100669210**
Nexus Euro3	125	2007	2008	436438	**100669210**
Nexus Euro3 Ie	125	2008	2010	436438	**100669210**
Runner 4T St Euro3	125	2008	2016	436438	**100669210**
Runner Vx	125	2005	2006	436438	**100669210**
Runner Vx 4T Euro3	125	2006	2007	436438	**100669210**
Runner Vx Race	125	2006	2006	436438	**100669210**
Runner Vx Sc	125	2006	2007	436438	**100669210**
Runner Vx-Vxr 125-180	125	2000	2001	436438	**100669210**
Runner Vx-Vxr 125-200	125	2002	2004	436438	**100669210**
Dna 125-180	180	2001	2001	436438	**100669210**
Runner Vx-Vxr 125-180	180	2000	2001	436438	**100669210**
Runner Vxr	200	2005	2006	436438	**100669210**
Runner Vxr 4T St Euro3	200	2008	2011	436438	**100669210**
Runner Vxr Euro3	200	2007	2007	436438	**100669210**
Runner Vxr Race	200	2005	2006	436438	**100669210**
Runner Vx-Vxr 125-200	200	2002	2004	436438	**100669210**
Nexus Euro3	250	2006	2007	436438	**100669210**
Nexus Sp Euro3	250	2006	2007	436438	**100669210**
Oregon	250	2006	2010	436438	**100669210**
Nexus Euro3	300	2008	2011	436438	**100669210**
Fuoco 4T-4V Ie E3 Lt	500	2013	2014	436438	**100669210**
Fuoco Euro3	500	2007	2013	436438	**100669210**
Nexus	500	2003	2005	436438	**100669210**
Nexus Euro3	500	2006	2011	436438	**100669210**
Nexus Sp Euro3	500	2006	2007	436438	**100669210**
Gp	800	2007	2011	436438	**100669210**
Gp Centenario	800	2009	2009	436438	**100669210**
HONDA					
C 50 S Cub	50	1992	1992	12209GB4681	**100669240**
C 50 Sw Cub	50	1994	1994	12209GB4681	**100669240**
Crf 50 F	50	2004	2018	12209GB4681	**100669240**
Nsc 50 Mpd Vision 16 Inch	50	2012	2019	12209GB4681	**100669240**
Nsc 50 R 2Wh	50	2013	2013	12209GB4681	**100669240**
Nsc 50 R T2	50	2014	2017	12209GB4681	**100669240**
Nsc 50 Wh Vision 14 Inch	50	2012	2013	12209GB4681	**100669240**
St 50 Dax	50	1988	2000	12209GB4681	**100669240**
Xr 50 R	50	2002	2004	12209GB4681	**100669240**
Z 50 G Monkey	50	1979	1983	12209GB4681	**100669240**
Z 50 J Monkey	50	1979	1985	12209GB4681	**100669240**
Zb 50 P Monkey	50	1988	1991	12209GB4681	**100669240**
C 70 Cw Cub	70	1994	1994	12209GB4681	**100669240**
Crf 70 F	70	2005	2012	12209GB4681	**100669240**
Xr 70 R	70	1997	2000	12209GB4681	**100669240**
C 90 Cub	90	1993	1993	12209GB4681	**100669240**
C 90 Cub	90	1996	1996	12209GB4681	**100669240**
C 90 Cw Cub	90	1994	1994	12209GB4681	**100669240**
C 90 Cw Cub	90	1997	1997	12209GB4681	**100669240**
C 90 M Cub	90	1993	1993	12209GB4681	**100669240**
C 90 M Cub	90	1996	1996	12209GB4681	**100669240**
Trx 90 X Sportrax	90	2011	2018	12209GB4681	**100669240**
Scv 100 Lead	100	2003	2008	12209GB4681	**100669240**
Afs 110 2Sh I Wave	110	2012	2014	12209GB4681	**100669240**
Afs 110 Csf I Wave	110	2015	2016	12209GB4681	**100669240**
Crf 110 F	110	2013	2019	12209GB4681	**100669240**
Nhx 110 Wh Lead	110	2008	2013	12209GB4681	**100669240**
Nsc 110 Mpd Vision	110	2012	2018	12209GB4681	**100669240**
Anf 125 Innova	125	2003	2012	12209GB4681	**100669240**
C 125 A Super Cub Abs	125	2018	2019	12209GB4681	**100669240**
Cb 125 F	125	2015	2016	12209GB4681	**100669240**
Cb 125 F Cbs	125	2017	2018	12209GB4681	**100669240**
Cb 125 R Neo Sports Cafe Abs	125	2018	2018	12209GB4681	**100669240**
Cbf 125 M	125	2009	2012	12209GB4681	**100669240**
Cbf 125 Na Neo Sports Cafe Abs	125	2018	2018	12209GB4681	**100669240**
Cbr 125 R	125	2004	2005	12209MA6003	**100669250**
Cbr 125 R	125	2012	2019	12209GB4681	**100669240**
Cbr 125 R 80 Km/h	125	2012	2015	12209GB4681	**100669240**
Cbr 125 Rs Repsol	125	2005	2007	12209MA6003	**100669250**
Cbr 125 Rs Repsol	125	2012	2019	12209GB4681	**100669240**
Cbr 125 Rs Repsol 80 Km/h	125	2012	2015	12209GB4681	**100669240**
Cbr 125 Rt	125	2012	2019	12209GB4681	**100669240**
Cbr 125 Rt 80 Km/h	125	2012	2015	12209GB4681	**100669240**
Cbr 125 Rw	125	2005	2009	12209MA6003	**100669250**
Cbr 125 Rw	125	2010	2011	12209GB4681	**100669240**
Cbr 125 Rw 80 Km/h	125	2007	2009	12209MA6003	**100669250**
Cbr 125 Rw 80 Km/h	125	2010	2011	12209GB4681	**100669240**
Cg 125 Es	125	2004	2008	12209GB4681	**100669240**
Ch 125 Elite	125	1984	1985	12209MA6003	**100669250**
Ch 125 Spacy	125	1986	1987	12209MA6003	**100669250**
Ch 125 Spacy	125	1996	1999	12209MA6003	**100669250**
Crf 125 F 17 Und 14´	125	2014	2019	12209GB4681	**100669240**
Fes 125 A S-Wing Abs	125	2007	2013	12209MA6003	**100669250**
Fes 125 Pantheon Cbs	125	2003	2007	12209MA6003	**100669250**
Fes 125 S-Wing	125	2007	2010	12209MA6003	**100669250**
Msx 125	125	2013	2013	12209MA6003	**100669250**
Msx 125	125	2014	2016	12209GB4681	**100669240**
Msx 125 A Abs	125	2017	2018	12209GB4681	**100669240**
Nes 125 @/ Arobase	125	2000	2006	12209MA6003	**100669250**
Pcx 125 A	125	2018	2019	12209GB4681	**100669240**
Pcx 125 Ww125	125	2013	2013	12209GB4681	**100669240**



Modello *Model*	CC	Da *From*	A *To*	OEM	Codice RMS *RMS Code*
Pcx 125 Ww125Ex2	125	2010	2017	12209GB4681	**100669240**
Pes 125 Ps I	125	2006	2013	12209MA6003	**100669250**
Ses 125 Dylan	125	2002	2006	12209MA6003	**100669250**
Sh 125 Ad I Abs	125	2013	2019	12209GB4681	**100669240**
Sh 125 Anc I Mode	125	2014	2019	12209GB4681	**100669240**
Sh 125 D I	125	2009	2009	12209MA6003	**100669250**
Sh 125 I	125	2005	2013	12209MA6003	**100669250**
Sh 125 Scooby	125	2001	2004	12209MA6003	**100669250**
Vt 125 C Shadow	125	1999	2008	12209GB4681	**100669240**
Vt 125 C Shadow 80 Km/h	125	1999	2005	12209GB4681	**100669240**
Vt 125 C2 Shadow	125	2000	2002	12209GB4681	**100669240**
Vt 125 C2 Shadow 80 Km/h	125	2000	2002	12209GB4681	**100669240**
Xl 125 V Varadero	125	2001	2013	12209GB4681	**100669240**
Xl 125 V Varadero 80 Km/h	125	2001	2008	12209GB4681	**100669240**
Xr 125 L	125	2003	2008	12209GB4681	**100669240**
Z 125 Ma Monkey Abs	125	2018	2019	12209GB4681	**100669240**
Crf 150 F	150	2006	2016	12209GB4681	**100669240**
Crf 150 R 17 Und 14´	150	2007	2015	12208ML0721	**100669300**
Crf 150 Rb 19 Und 16´	150	2007	2018	12208ML0721	**100669300**
Fes 150 A S-Wing Abs	150	2007	2009	12209MA6003	**100669250**
Fes 150 Pantheon	150	2003	2005	12209MA6003	**100669250**
Fes 150 S-Wing	150	2007	2009	12209MA6003	**100669250**
Nes 150 @/ Arobase	150	2000	2006	12209MA6003	**100669250**
Pcx 150 Ww150	150	2012	2013	12209GB4681	**100669240**
Pcx 150 Ww150 Ex2	150	2015	2018	12209GB4681	**100669240**
Pes 150 Ps I	150	2006	2010	12209MA6003	**100669250**
Ses 150 Dylan	150	2002	2004	12209MA6003	**100669250**
Sh 150 A I Abs	150	2013	2016	12209GB4681	**100669240**
Sh 150 Ad I Abs	150	2017	2019	12209GB4681	**100669240**
Sh 150 D I	150	2009	2011	12209MA6003	**100669250**
Sh 150 I	150	2005	2008	12209MA6003	**100669250**
Sh 150 Scooby	150	2001	2004	12209MA6003	**100669250**
Cbf 250	250	2004	2006	12209GB4681	**100669240**
Cn 250 Helix	250	1986	1990	12209MA6003	**100669250**
Cn 250 Helix Spazio	250	1991	1999	12209MA6003	**100669250**
Crf 250 R	250	2004	2007	12209GB4681	**100669240**
Crf 250 R	250	2008	2008	12208ML0721	**100669300**
Crf 250 R	250	2008	2008	12209GB4681	**100669240**
Crf 250 R	250	2009	2009	12208ML0721	**100669300**
Crf 250 R	250	2009	2009	12209GB4681	**100669240**
Crf 250 R	250	2010	2010	12208ML0721	**100669300**
Crf 250 R	250	2010	2010	12209GB4681	**100669240**
Crf 250 R	250	2011	2011	12208ML0721	**100669300**
Crf 250 R	250	2011	2011	12209GB4681	**100669240**
Crf 250 R	250	2012	2012	12208ML0721	**100669300**
Crf 250 R	250	2012	2012	12209GB4681	**100669240**
Crf 250 R	250	2013	2013	12208ML0721	**100669300**
Crf 250 R	250	2013	2013	12209GB4681	**100669240**
Crf 250 R	250	2014	2014	12208ML0721	**100669300**
Crf 250 R	250	2014	2014	12209GB4681	**100669240**
Crf 250 R	250	2015	2015	12208ML0721	**100669300**
Crf 250 R	250	2015	2019	12209GB4681	**100669240**
Crf 250 Rla Rally Abs	250	2017	2019	12209GB4681	**100669240**
Crf 250 Rx	250	2019	2019	12209GB4681	**100669240**
Crf 250 X	250	2004	2019	12209GB4681	**100669240**
Fes 250 Foresight	250	1998	2005	12209GB4681	**100669240**
Nss 250 A Forza Abs	250	2008	2011	12209GB4681	**100669240**
Nss 250 A Jazz Abs	250	2001	2004	12209GB4681	**100669240**
Nss 250 Ex Forza Abs	250	2005	2013	12209GB4681	**100669240**
Nss 250 Jazz	250	2001	2001	12209GB4681	**100669240**
Nss 250 Jazz	250	2003	2004	12209GB4681	**100669240**
Nss 250 Jazz Es	250	2001	2004	12209GB4681	**100669240**
Nss 250 X Forza	250	2005	2013	12209GB4681	**100669240**
Vtr 250	250	2009	2011	12209MA6003	**100669250**
Xr 250 R	250	1996	2004	12209GB4681	**100669240**
Nss 300 A Forza Abs	300	2013	2019	12208ML0721	**100669300**
Nss 300 Forza	300	2013	2017	12208ML0721	**100669300**
Sh 300 A I Abs	300	2007	2019	12208ML0721	**100669300**
Sh 300 I	300	2008	2010	12208ML0721	**100669300**
Fjs 400 A Sw-T Abs	400	2009	2016	12208ML0721	**100669300**
Fjs 400 D Sw-T	400	2009	2009	12208ML0721	**100669300**
Rvf 400 R	400	1994	1996	12208ML0721	**100669300**
Vfr 400 R	400	1989	1989	12208ML0721	**100669300**
Vfr 400 Riii	400	1990	1991	12208ML0721	**100669300**
Crf 450 L	450	2019	2019	12209GB4681	**100669240**
Crf 450 R	450	2002	2019	12209GB4681	**100669240**
Crf 450 Rx	450	2017	2019	12209GB4681	**100669240**
Crf 450 X	450	2005	2018	12209GB4681	**100669240**
Trx 450 Er Sportrax E-Start	450	2006	2009	12209GB4681	**100669240**
Trx 450 R Sportrax K-Start	450	2006	2009	12209GB4681	**100669240**
Cb 500	500	1994	2003	12208ML0721	**100669300**
Cb 500 S Sport	500	1998	2003	12208ML0721	**100669300**
Cbf 500	500	2004	2008	12208ML0721	**100669300**
Cbf 500 A Abs	500	2004	2008	12208ML0721	**100669300**
Cbx 550 F Supersport	550	1982	1984	12209MA6003	**100669250**
Cbx 550 F2 Supersport	550	1982	1984	12209MA6003	**100669250**
Cbr 600 F	600	1987	1990	12209MA6003	**100669250**
Fjs 600 A Silver Wing Abs	600	2003	2010	12208ML0721	**100669300**
Fjs 600 A Sw-T Abs	600	2011	2016	12208ML0721	**100669300**
Fjs 600 D Silver Wing	600	2003	2006	12208ML0721	**100669300**
Fjs 600 Silver Wing	600	2001	2002	12208ML0721	**100669300**
Ctx 700 D Dct Halbverkleidung Abs	700	2014	2017	12209MA6003	**100669250**
Ctx 700 Nd Dct Lenkerverkleidung Abs	700	2014	2016	12209MA6003	**100669250**
Nc 700 D Integra Dct Abs	700	2012	2013	12209MA6003	**100669250**
Nc 700 S	700	2012	2014	12209MA6003	**100669250**
Nc 700 Sa Abs	700	2012	2014	12209MA6003	**100669250**
Nc 700 Sd Dct Abs	700	2012	2014	12209MA6003	**100669250**
Nc 700 X	700	2012	2014	12209MA6003	**100669250**
Nc 700 Xa Abs	700	2012	2014	12209MA6003	**100669250**
Nc 700 Xd Dct Abs	700	2012	2014	12209MA6003	**100669250**
Cb 750 F2 Seven Fifty	750	1992	2003	12209GB4681	**100669240**
Cb 750 Nighthawk	750	1991	1992	12209GB4681	**100669240**
Nc 750 D Integra Dct Abs	750	2014	2019	12209MA6003	**100669250**
Nc 750 J Nm4 Vultus Dct Abs	750	2014	2017	12209MA6003	**100669250**
Nc 750 Sa Abs	750	2014	2019	12209MA6003	**100669250**
Nc 750 Sd Dct Abs	750	2014	2019	12209MA6003	**100669250**
Nc 750 Xa Abs	750	2014	2019	12209MA6003	**100669250**
Nc 750 Xd Dct Abs	750	2014	2019	12209MA6003	**100669250**
Rvf 750 R	750	1994	1997	12208ML0721	**100669300**
Vf 750 C Magna	750	1993	2000	12208ML0721	**100669300**
Vfr 750 F	750	1988	1989	12209MA6003	**100669250**
Vfr 750 F	750	1990	1997	12208ML0721	**100669300**
Vfr 750 R	750	1988	1993	12208ML0721	**100669300**
X-Adv 750 Dct Abs	750	2017	2019	12209MA6003	**100669250**
Vfr 800	800	2002	2010	12208ML0721	**100669300**



Modello *Model*	CC	Da *From*	A *To*	OEM	Codice RMS *RMS Code*
Vfr 800 A Abs	800	2002	2013	12208ML0721	**100669300**
Vfr 800 F Abs	800	2014	2018	12208ML0721	**100669300**
Vfr 800 Fi	800	1998	2001	12208ML0721	**100669300**
Vfr 800 Fi Jubi Modell	800	1999	1999	12208ML0721	**100669300**
Vfr 800 X Crossrunner Abs	800	2011	2018	12208ML0721	**100669300**
Cb 900 F Hornet	900	2002	2006	12208ML0721	**100669300**
Cbr 900 Rr Fireblade	900	1996	2003	12208ML0721	**100669300**
Cb 1100 Sf X-11	1100	2000	2003	12209MA6003	**100669250**
Cbr 1100 Xx Super Blackbird	1100	1997	2008	12209MA6003	**100669250**
Vfr 1200 F Abs	1200	2010	2016	12208ML0721	**100669300**
Vfr 1200 Fd Dct Abs	1200	2010	2016	12208ML0721	**100669300**
Vfr 1200 X Crosstourer Abs	1200	2012	2013	12208ML0721	**100669300**
Vfr 1200 X Crosstourer Abs	1200	2017	2018	12208ML0721	**100669300**
Vfr 1200 Xd Crosstourer Dct Abs	1200	2012	2013	12208ML0721	**100669300**
Vfr 1200 Xd Crosstourer Dct Abs	1200	2017	2018	12208ML0721	**100669300**
Vfr 1200 Xdl Crosstourer Dct Abs	1200	2014	2016	12208ML0721	**100669300**
Vfr 1200 Xl Crosstourer Abs	1200	2014	2016	12208ML0721	**100669300**
Cb 1300 F Super Four	1300	2003	2004	12209MA6003	**100669250**
Ctx 1300 A Abs	1300	2014	2016	12209MA6003	**100669250**
St 1300 A Pan European Abs Cbs	1300	2002	2017	12209MA6003	**100669250**
St 1300 Pan European Cbs	1300	2002	2008	12209MA6003	**100669250**
Gl 1800 A Goldwing Abs	1800	2001	2005	12209MA6003	**100669250**
Gl 1800 B Goldwing/F6B/ Bagger Abs	1800	2013	2016	12209MA6003	**100669250**
Gl 1800 C Goldwing/F6C/ Valkyrie Abs	1800	2014	2016	12209MA6003	**100669250**
Gl 1800 Goldwing Abs	1800	2006	2013	12209MA6003	**100669250**
Gl 1800 Goldwing Airbag/ Navi Abs	1800	2007	2017	12209MA6003	**100669250**
Cbf 125 M		2013	2016	12209GB4681	**100669240**
HUSQVARNA					
Tr650 Terra-Strada	650	2013	2014	7700315	**100669210**
KAWASAKI					
J300 Abs Bgf-Bgfa	300	2016	2016	92093Y025	**100669260**
J300 Abs Chf-Chfa-Cjf-Cjfa	300	2017	2018	92093Y025	**100669260**
J300 Agf-Agfa	300	2016	2016	92093Y025	**100669260**
J300 Ckf-Ckfa	300	2019	2019	92093Y025	**100669260**
Kvf Brute Force Cef-Cff-Cgf-Chf-Cjf	300	2014	2018	92093Y025	**100669260**
KYMCO					
Agility 4T Carry	50	2011	2011	00122779	**100669240**
Agility 4T R10	50	2006	2008	00122779	**100669240**
Agility 4T R12	50	2007	2008	00122779	**100669240**
Agility 4T R16	50	2008	2009	00122779	**100669240**
Agility 4T R16	50	2012	2012	00122779	**100669240**
Agility 4T R16 Plus Euro4	50	2019	2019	00122785	**100669240**
Agility Carry 4T Euro4	50	2019	2019	00122785	**100669240**
Agility Plus 4T	50	2014	2014	00122779	**100669240**
Agility R12	50	2005	2005	00122779	**100669240**
Agility R12 Ecs	50	2016	2016	00122785	**100669240**
Agility Rs	50	2009	2009	00122779	**100669240**
Filly	50	1998	2000	00122779	**100669240**
Filly Lx	50	2001	2002	00122779	**100669240**
Like 4T	50	2009	2009	00112062	**100669240**
Like Euro4 4T	50	2018	2018	00122785	**100669240**
Super 8	50	2007	2007	00122779	**100669240**

Modello *Model*	CC	Da *From*	A *To*	OEM	Codice RMS *RMS Code*
Super 8 4T	50	2009	2009	00122779	**100669240**
Super 8 4T	50	2013	2013	00122779	**100669240**
Vitality 4T	50	2004	2004	00122779	**100669240**
Agility 4T	125	2006	2006	00122779	**100669240**
Agility 4T Euro3	125	2006	2008	00122779	**100669240**
Agility Carry	125	2011	2011	00122779	**100669240**
Agility Carry Euro4	125	2017	2017	00122785	**100669240**
Agility Plus	125	2014	2014	00122779	**100669240**
Agility Plus E4	125	2016	2016	00122785	**100669240**
Agility R16	125	2008	2009	00122779	**100669240**
Agility R16	125	2012	2012	00122779	**100669240**
Agility Rs	125	2009	2009	00112062	**100669240**
B&W 125-150	125	2000	2000	00122779	**100669240**
B&W 125-150 Euro2	125	2003	2004	00122779	**100669240**
Dink 125 Euro3	125	2006	2007	00122779	**100669240**
Dink 125-150	125	1997	1998	00122779	**100669240**
Dink Classic 125-150	125	2002	2002	00122779	**100669240**
Dink Classic 125-150 Euro2	125	2003	2003	00122779	**100669240**
Dink Lx 125-150	125	1998	2000	00122779	**100669240**
G-Dink	125	2012	2012	00122779	**100669240**
Grand Dink 125-150	125	2001	2002	00122779	**100669240**
Grand Dink 125-150 Euro2	125	2003	2004	00122779	**100669240**
Heroism	125	1995	1997	00122779	**100669240**
K-Pipe	125	2012	2013	00122779	**100669240**
Like	125	2009	2009	00112062	**100669240**
Like Lx	125	2012	2012	00122779	**100669240**
Movie	125	1999	2000	00122779	**100669240**
Movie 125 Euro3	125	2006	2007	00122779	**100669240**
Movie Xl 125-150	125	2001	2001	00122779	**100669240**
Movie Xl 125-150 Euro2	125	2003	2004	00122779	**100669240**
People 125-150	125	1999	2000	00122779	**100669240**
People 125-150 Euro2	125	2003	2003	00122779	**100669240**
People Euro3	125	2007	2008	00122779	**100669240**
People Euro3	125	2011	2011	00122779	**100669240**
People One E4	125	2016	2016	00122785	**100669240**
People One I	125	2013	2013	00122779	**100669240**
People One I Dd	125	2015	2015	00122785	**100669240**
People S	125	2005	2005	00122779	**100669240**
People S Dd Euro3	125	2007	2008	00122779	**100669240**
Quannon	125	2008	2008	00122779	**100669240**
Quannon Naked	125	2010	2010	00122779	**100669240**
Super 8	125	2008	2008	00122779	**100669240**
Super 8	125	2009	2009	00112062	**100669240**
Vivio 125-150	125	2000	2000	00122779	**100669240**
Agility R16	150	2008	2009	00122779	**100669240**
Agility R16 Plus E4	150	2016	2016	00122785	**100669240**
B&W 125-150	150	2000	2000	00122779	**100669240**
B&W 125-150 Euro2	150	2003	2004	00122779	**100669240**
Dink 125-150	150	1997	1998	00122779	**100669240**
Dink Classic 125-150	150	2002	2002	00122779	**100669240**
Dink Classic 125-150 Euro2	150	2003	2003	00122779	**100669240**
Dink Lx 125-150	150	1998	2000	00122779	**100669240**
Grand Dink 125-150	150	2001	2002	00122779	**100669240**
Grand Dink 125-150 Euro2	150	2003	2004	00122779	**100669240**
Heroism	150	1995	1997	00122779	**100669240**
Movie 150 Euro3	150	2006	2007	00122779	**100669240**
Movie Xl 125-150	150	2001	2001	00122779	**100669240**
Movie Xl 125-150 Euro2	150	2003	2004	00122779	**100669240**



Modello *Model*	CC	Da *From*	A *To*	OEM	Codice RMS *RMS Code*
People 125-150	150	1999	2000	00122779	**100669240**
People 125-150 Euro2	150	2003	2003	00122779	**100669240**
Vivio 125-150	150	2000	2000	00122779	**100669240**
Agility 200I R16	200	2010	2010	00122779	**100669240**
Agility I Plus	200	2014	2014	00122779	**100669240**
Agility R16	200	2012	2012	00122779	**100669240**
Dink Classic	200	2004	2004	00122779	**100669240**
Dink Euro3I	200	2006	2007	00122785	**100669240**
Downtown I	200	2010	2010	00122779	**100669240**
Like 200I	200	2009	2009	00122779	**100669240**
Like Lx	200	2012	2012	00122779	**100669240**
People Gti	200	2010	2010	00122779	**100669240**
People Gti	200	2014	2014	00122779	**100669240**
People S	200	2005	2005	00122779	**100669240**
People S 200I	200	2007	2007	00122779	**100669240**
B&W	250	2000	2000	00122779	**100669240**
B&W Euro2	250	2003	2003	00122779	**100669240**
Grand Dink	250	2001	2002	00122779	**100669240**
Grand Dink Euro2	250	2003	2004	00122779	**100669240**
Kxr	250	2003	2004	00122779	**100669240**
Mxu	250	2005	2005	00122779	**100669240**
People Lc	250	2003	2004	00122779	**100669240**
People S	250	2006	2006	00122779	**100669240**
People S 250I	250	2007	2007	00122779	**100669240**
Venox	250	2002	2003	00122779	**100669240**
Venox Euro2	250	2004	2004	00122779	**100669240**
Venox Euro3	250	2007	2007	00122779	**100669240**
X Citing	250	2005	2005	00122779	**100669240**
X Citing I	250	2006	2007	00122779	**100669240**
Yup	250	2003	2003	00122779	**100669240**
Downtown 300I	300	2009	2009	00122779	**100669240**
Downtown Abs	300	2010	2010	00122779	**100669240**
Downtown Abs I	300	2011	2016	00122779	**100669240**
Downtown I	300	2011	2011	00122779	**100669240**
G-Dink	300	2012	2012	00122779	**100669240**
G-Dink I Abs E4	300	2017	2017	00122785	**100669240**
K-Xct I	300	2012	2012	00122779	**100669240**
K-Xct I Abs	300	2014	2014	00122779	**100669240**
Maxxer	300	2005	2006	00122779	**100669240**
Maxxer Onroad	300	2016	2016	00122785	**100669240**
Mxu	300	2005	2006	00122779	**100669240**
Mxu R	300	2010	2010	00122779	**100669240**
People Gti	300	2010	2011	00122779	**100669240**
People Gti	300	2014	2014	00122779	**100669240**
People Gti Abs	300	2012	2012	00122779	**100669240**
People Gti Abs	300	2014	2014	00122779	**100669240**
People Gti Abs E4	300	2016	2016	00122785	**100669240**
People S 300I	300	2008	2008	00122779	**100669240**
X Citing 300I	300	2008	2008	00122779	**100669240**
X Citing 300I R	300	2008	2009	00122779	**100669240**
X-Town Abs	300	2016	2016	00122785	**100669240**
Downtown Abs E4	350	2016	2016	00122785	**100669240**
Downtown I Abs	350	2015	2015	00122779	**100669240**
X Citing I	400	2013	2013	00122779	**100669240**
X Citing I	400	2015	2015	00122785	**100669240**
X Citing I Abs	400	2014	2015	00122779	**100669240**
X Citing I Abs E4	400	2016	2017	00122785	**100669240**
X Citing I S Euro4	400	2018	2018	00122785	**100669240**

Modello *Model*	CC	Da *From*	A *To*	OEM	Codice RMS *RMS Code*
Mxu	500	2005	2006	00122779	**100669240**
Mxu Irs	500	2010	2010	00122779	**100669240**
Uxv	500	2008	2008	00122779	**100669240**
Uxv I	500	2010	2010	00122779	**100669240**
X Citing	500	2005	2005	00122779	**100669240**
X Citing 500 R	500	2009	2009	00122779	**100669240**
X Citing 500I	500	2006	2007	00122779	**100669240**
X Citing 500I	500	2008	2008	00122779	**100669240**
X Citing 500I R	500	2007	2008	00122779	**100669240**
MALAGUTI					
Centro 4T	50	2008	2008	45300600	**100669210**
Centro Sl 4T	50	2010	2010	45300600	**100669210**
Ciak Master 4T	50	2005	2006	45300600	**100669210**
Ciak	125	2000	2001	55301800	**100669240**
Ciak Master	125	2004	2004	55301800	**100669240**
Ciak Master Euro 3	125	2006	2006	55301800	**100669240**
Ciak Restyling Euro2	125	2003	2003	55301800	**100669240**
F18 Warrior	125	2000	2002	55301800	**100669240**
Madison 3	125	2006	2009	45300600	**100669210**
Ciak	150	2000	2002	55301800	**100669240**
Ciak Master	150	2004	2004	55301800	**100669240**
Ciak Restyling Euro2	150	2003	2003	55301800	**100669240**
F18 Warrior	150	2000	2002	55301800	**100669240**
Madison R	180	2001	2002	45300600	**100669210**
Ciak Master Euro 2	200	2006	2006	55301800	**100669240**
Madison S Restyling	200	2002	2002	45300600	**100669210**
Madison S Restyling Euro2	200	2003	2003	45300600	**100669210**
Phantom Max	200	2003	2003	45300600	**100669210**
Madison 3	250	2006	2009	45300600	**100669210**
Madison Rs Restyling	250	2004	2004	45300600	**100669210**
Madison S	250	1999	2001	95300600	**100669220**
Password	250	2005	2006	95300600	**100669220**
Password Eu3	250	2007	2008	95300600	**100669220**
Phantom Max	250	2004	2004	45300600	**100669210**
Spidermax Gt	500	2004	2005	45300600	**100669210**
Spidermax Gt Euro3	500	2006	2006	45300600	**100669210**
Spidermax Rs	500	2008	2008	45300600	**100669210**
MOTO GUZZI					
Griso 8V - 8V Special Edition	1200	2007	2013	436438	**100669210**
Griso Se 8V	1200	2015	2016	436438	**100669210**
Norge 8V Polizia Stradale	1200	2014	2014	436438	**100669210**
Norge Gt 8V - Polizia	1200	2010	2016	436438	**100669210**
Sport 8V	1200	2008	2013	436438	**100669210**
Stelvio	1200	2008	2008	436438	**100669210**
Stelvio 8V Std - Ntx	1200	2011	2017	436438	**100669210**
Stelvio Std - Ntx	1200	2009	2010	436438	**100669210**
Audace	1400	2015	2016	436438	**100669210**
Audace Carbon	1400	2017	2017	436438	**100669210**
California Corazzieri	1400	2016	2016	436438	**100669210**
California Custom Abs	1400	2012	2013	436438	**100669210**
California Touring	1400	2017	2017	436438	**100669210**
California Touring Abs	1400	2012	2014	436438	**100669210**
California Touring Abs S.E.	1400	2015	2016	436438	**100669210**
Eldorado	1400	2015	2017	436438	**100669210**
Mgx-21 Flying Fortress	1400	2016	2016	436438	**100669210**
PEUGEOT					
Kisbee 50 4T	50	2011	2015	-	**100669240**
Kisbee 50 4T Rs	50	2013	2015	-	**100669240**



Modello *Model*	CC	Da *From*	A *To*	OEM	Codice RMS *RMS Code*
Ludix 50 4T Pro	50	2014	2014	800984	**100669260**
Speedfight 50 3 4T Dt	50	2010	2015	800984	**100669260**
Speedfight 50 3 4T Dt Team Le Mans	50	2011	2011	800984	**100669260**
Tweet 50	50	2010	2012	800984	**100669260**
Tweet 50	50	2018	2018	-	**100669290**
Tweet 50	50	2019	2019	-	**100669290**
Tweet 50 /Evo	50	2013	2017	-	**100669290**
Tweet 50 Active	50	2018	2018	-	**100669290**
Tweet 50 Allure	50	2018	2018	-	**100669290**
Tweet 50 Double Black	50	2016	2017	-	**100669290**
Tweet 50 Evo	50	2019	2019	-	**100669290**
Tweet 50 Paris	50	2016	2017	-	**100669290**
Tweet 50 Pro	50	2017	2017	-	**100669290**
Tweet 50 Rs	50	2011	2016	800984	**100669260**
Tweet 50 Rs	50	2017	2017	-	**100669290**
Tweet 50 Rs	50	2018	2018	-	**100669290**
V-Clic 50	50	2007	2014	-	**100669240**
V-Clic 50 Silver Sport	50	2008	2013	-	**100669240**
Vivacity 50 3 4T New	50	2010	2017	800984	**100669260**
Vivacity 50 3 4T New Sixties	50	2010	2013	800984	**100669260**
Citystar 125	125	2012	2012	766514	**100669250**
Citystar 125 Active	125	2013	2014	766514	**100669250**
Citystar 125 Rs	125	2013	2016	766514	**100669250**
Geopolis 125 Executive Abs	125	2007	2011	766514	**100669250**
Geopolis 125 Premium	125	2007	2012	766514	**100669250**
Geopolis 125 Premium Rs	125	2007	2012	766514	**100669250**
Geopolis 125 Urban Abs	125	2008	2012	766514	**100669250**
Looxor 125	125	2003	2006	756140	**100669210**
Lxr 125	125	2010	2015	800984	**100669260**
Satelis 125 2 Executive Abs	125	2013	2014	766514	**100669250**
Satelis 125 2 Premium	125	2014	2016	766514	**100669250**
Satelis 125 2 Premium Rs	125	2013	2016	766514	**100669250**
Satelis 125 2 Urban Abs	125	2013	2016	766514	**100669250**
Satelis 125 2 Urban Rs Abs	125	2013	2016	766514	**100669250**
Satelis 125 Avenue	125	2008	2009	766514	**100669250**
Satelis 125 Executive Abs	125	2007	2013	766514	**100669250**
Satelis 125 Premium	125	2006	2013	766514	**100669250**
Satelis 125 Premium Rs	125	2008	2013	766514	**100669250**
Satelis 125 Premium Rs Abs	125	2010	2012	766514	**100669250**
Satelis 125 Urban Abs	125	2008	2013	766514	**100669250**
Speedfight 125 3	125	2014	2016	800984	**100669260**
Sum-Up 125	125	2008	2011	-	**100669240**
Tweet 125	125	2011	2014	-	**100669290**
Tweet 125 Abs	125	2018	2019	-	**100669290**
Tweet 125 Active Sbc	125	2018	2018	-	**100669290**
Tweet 125 Allure	125	2016	2016	-	**100669290**
Tweet 125 Allure Sbc	125	2018	2018	-	**100669290**
Tweet 125 Double Black	125	2016	2016	-	**100669290**
Tweet 125 Evo	125	2015	2016	-	**100669290**
Tweet 125 Ie Double Black Sbc	125	2017	2017	-	**100669290**
Tweet 125 Ie Paris Sbc	125	2017	2017	-	**100669290**
Tweet 125 Paris	125	2016	2017	-	**100669290**
Tweet 125 Pro	125	2014	2016	-	**100669290**
Tweet 125 Pro Sbc	125	2017	2017	-	**100669290**
Tweet 125 Rs	125	2011	2016	-	**100669290**
Tweet 125 Rs Sbc	125	2017	2018	-	**100669290**
Tweet 125 Sbc	125	2017	2019	-	**100669290**
Vivacity 125 Sixties	125	2011	2012	800984	**100669260**
Tweet 150	150	2011	2011	-	**100669290**
Tweet 150	150	2016	2016	-	**100669290**
Tweet 150 /Evo	150	2013	2015	-	**100669290**
Tweet 150 Abs	150	2017	2019	-	**100669290**
Tweet 150 Active Abs	150	2018	2018	-	**100669290**
Tweet 150 Allure Abs	150	2018	2018	-	**100669290**
Tweet 150 Double Black	150	2016	2017	-	**100669290**
Tweet 150 Paris	150	2016	2017	-	**100669290**
Tweet 150 Rs	150	2014	216	-	**100669290**
Tweet 150 Rs Abs	150	2017	2018	-	**100669290**
Citystar 200	200	2012	2016	766514	**100669250**
Lxr 200	200	2010	2015	800984	**100669260**
Geopolis 250 Executive Abs	250	2007	2009	756140	**100669210**
Geopolis 250 Premium	250	2006	2011	756140	**100669210**
Geopolis 250 Premium Rs	250	2007	2011	756140	**100669210**
Geopolis 250 Urban Abs	250	2010	2012	756140	**100669210**
Satelis 250 Executive Abs	250	2007	2009	756140	**100669210**
Satelis 250 Premium	250	2006	2011	756140	**100669210**
Satelis 250 Premium Rs	250	2008	2011	756140	**100669210**
Satelis 250 Urban Abs	250	2010	2012	756140	**100669210**
Geopolis 300 Geostyle	300	2011	2012	756140	**100669210**
Geopolis 300 Premium	300	2011	2014	756140	**100669210**
Geopolis 300 Premium Rs	300	2011	2014	756140	**100669210**
Satelis 2 300	300	2013	2016	756140	**100669210**
Geopolis 400 Executive Abs	400	2007	2009	756140	**100669210**
Geopolis 400 Premium	400	2007	2012	756140	**100669210**
Geopolis 400 Premium Rs	400	2008	2011	756140	**100669210**
Geopolis 400 Urban Abs	400	2010	2012	756140	**100669210**
Satelis 400 Executive Abs	400	2007	2009	756140	**100669210**
Satelis 400 Premium	400	2007	2012	756140	**100669210**
Satelis 400 Premium Rs	400	2008	2011	756140	**100669210**
Satelis 400 Urban Abs	400	2010	2011	756140	**100669210**
Geopolis 500 Premium	500	2008	2012	756140	**100669210**
Satelis 500 Executive Abs	500	2007	2009	756140	**100669210**
Satelis 500 Premium	500	2006	2012	756140	**100669210**
Satelis 500 Premium Rs	500	2008	2011	756140	**100669210**
Satelis 500 Urban Abs	500	2010	2011	756140	**100669210**
PIAGGIO					
Fly 4T	50	2005	2007	436438	**100669210**
Fly 4T & 25-30 Km/h	50	2008	2011	436438	**100669210**
Fly 4T 2V	50	2013	2015	436438	**100669210**
Fly 4T 2V 25-30Km-H	50	2012	2017	436438	**100669210**
Fly 4T 4V	50	2012	2013	843307	**100669200**
Fly 4T Motore Chn	50	2006	2007	436438	**100669210**
Liberty 4T	50	2000	2002	436438	**100669210**
Liberty 4T	50	2005	2008	436438	**100669210**
Liberty 4T Delivery - Single	50	2010	2014	436438	**100669210**
Liberty 4T Delivery Tnt	50	2009	2009	436438	**100669210**
Liberty 4T Ptt - Double - Nexive	50	2009	2017	436438	**100669210**
Liberty 4T Ptt (Deu)	50	2007	2012	436438	**100669210**
Liberty 4T Rst	50	2004	2004	436438	**100669210**
Liberty 4T Sport	50	2006	2008	436438	**100669210**
Liberty Moc 4T & Elle	50	2009	2016	436438	**100669210**
Vespa Et4	50	2000	2005	436438	**100669210**
Vespa Lx 4T	50	2005	2009	436438	**100669210**
Vespa Lx 4T-4V	50	2009	2013	843307	**100669200**
Vespa Lx 4T-4V Touring	50	2010	2013	843307	**100669200**



Modello *Model*	CC	Da *From*	A *To*	OEM	Codice RMS *RMS Code*
Vespa Primavera 4T 2V 25 Km/h	50	2014	2017	436438	**100669210**
Vespa Primavera 4T-4V No Abs	50	2013	2017	843307	**100669200**
Vespa S 4T-4V & College	50	2008	2012	843307	**100669200**
Vespa Sprint 4T 2V 25 Km/h	50	2014	2017	436438	**100669210**
Vespa Sprint 4T 4V Noabs E2 Emea	50	2014	2017	843307	**100669200**
Zip 4T	50	2000	2013	436438	**100669210**
Zip 4T 25Km-H	50	2006	2016	436438	**100669210**
Fly 4T	100	2006	2014	436438	**100669210**
Free	100	2002	2003	436438	**100669210**
Zip 4T	100	2006	2010	436438	**100669210**
Beverly	125	2001	2003	436438	**100669210**
Beverly Euro 3	125	2007	2008	436438	**100669210**
Beverly Euro 3 Mic	125	2007	2007	436438	**100669210**
Beverly Euro 3 Sport	125	2007	2008	436438	**100669210**
Beverly Rst	125	2004	2005	436438	**100669210**
Beverly Rst	125	2005	2007	436438	**100669210**
Beverly Rst 4T 4V Ie Euro3	125	2010	2015	436438	**100669210**
Beverly Tourer Euro3	125	2007	2010	436438	**100669210**
Carnaby	125	2007	2010	436438	**100669210**
Fly	125	2005	2007	436438	**100669210**
Fly 4T 3V Ie E3 Dt	125	2013	2015	436438	**100669210**
Fly 4T 3V Ie E3 Dt	125	2013	2015	843307	**100669200**
Fly 4T 3V Ie Euro3 Lem	125	2012	2013	436438	**100669210**
Fly 4T 3V Ie Euro3 Lem	125	2012	2013	843307	**100669200**
Fly Euro3	125	2007	2011	436438	**100669210**
Hexagon Gtx	125	2000	2000	436438	**100669210**
Hexagon Lx4	125	1998	1999	436438	**100669210**
Liberty	125	1998	2002	436438	**100669210**
Liberty 4T	125	2006	2007	436438	**100669210**
Liberty 4T 2V Euro3	125	2009	2012	436438	**100669210**
Liberty 4T 2V Ie Ptt - Ita	125	2012	2013	436438	**100669210**
Liberty 4T 3V Ie	125	2015	2015	436438	**100669210**
Liberty 4T 3V Ie	125	2015	2015	843307	**100669200**
Liberty 4T 3V Ie E3	125	2013	2014	436438	**100669210**
Liberty 4T 3V Ie E3	125	2013	2014	843307	**100669200**
Liberty 4T Euro3	125	2006	2008	436438	**100669210**
Liberty 4T Euro3 Delivery - Single	125	2007	2015	436438	**100669210**
Liberty 4T Euro3 Delivery - Tnt - Nexive	125	2008	2015	436438	**100669210**
Liberty 4T Iget Corporate E4	125	2017	2019	436438	**100669210**
Liberty 4T Iget Corporate E4	125	2017	2019	843307	**100669200**
Liberty 4T Sport Euro3	125	2006	2008	436438	**100669210**
Liberty Iget 4T 3V Ie	125	2015	2018	436438	**100669210**
Liberty Iget 4T 3V Ie	125	2015	2018	843307	**100669200**
Liberty Rst	125	2004	2005	436438	**100669210**
Liberty Rst Ptt	125	2005	2011	436438	**100669210**
Liberty Sport	125	2006	2006	436438	**100669210**
Medley 4T Ie Abs	125	2016	2018	843307	**100669200**
Mp3	125	2006	2008	436438	**100669210**
Mp3 Ibrido	125	2009	2010	436438	**100669210**
Mp3 Ie	125	2008	2011	436438	**100669210**
Mp3 Ie Touring	125	2011	2012	436438	**100669210**
Mp3 Yourban Erl	125	2011	2013	436438	**100669210**
Sfera	125	1995	1997	436438	**100669210**
Skipper 4T	125	2000	2002	436438	**100669210**
Super Hexagon Gtx 12	125	2001	2002	436438	**100669210**

Modello *Model*	CC	Da *From*	A *To*	OEM	Codice RMS *RMS Code*
Typhoon 4T 2V Euro3	125	2010	2011	436438	**100669210**
Vespa 946 4T 3V Abs - 946 Red Emea, Apac	125	2013	2017	436438	**100669210**
Vespa 946 4T 3V Abs - 946 Red Emea, Apac	125	2013	2017	843307	**100669200**
Vespa 946 4T 3V Abs Armani	125	2015	2015	436438	**100669210**
Vespa 946 4T 3V Abs Armani	125	2015	2015	843307	**100669200**
Vespa Et4	125	1996	2002	436438	**100669210**
Vespa Granturismo	125	2003	2007	436438	**100669210**
Vespa Granturismo Euro 3	125	2006	2007	436438	**100669210**
Vespa Gts 4T Ie Super	125	2009	2016	436438	**100669210**
Vespa Gts Euro3	125	2007	2012	436438	**100669210**
Vespa Gts Ie Abs E4	125	2019	2019	843307	**100669200**
Vespa Gts Ie Abs E4 (Emea)	125	2016	2018	843307	**100669200**
Vespa Gts Ie Abs E4 Abs 4T Super	125	2018	2019	843307	**100669200**
Vespa Gtv	125	2006	2008	436438	**100669210**
Vespa Gtv 4T Navy Euro3	125	2008	2008	436438	**100669210**
Vespa Lx	125	2005	2006	436438	**100669210**
Vespa Lx 4T 3V Ie - Touring	125	2012	2013	436438	**100669210**
Vespa Lx 4T 3V Ie - Touring	125	2012	2013	843307	**100669200**
Vespa Lx 4T Euro3 Touring	125	2010	2011	436438	**100669210**
Vespa Lx 4T Fl	125	2009	2009	436438	**100669210**
Vespa Lx Euro 3	125	2006	2008	436438	**100669210**
Vespa Lx Euro 3 Ie	125	2009	2011	436438	**100669210**
Vespa Lx Primavera 4T 3V Ie	125	2013	2017	436438	**100669210**
Vespa Lx Primavera 4T 3V Ie	125	2013	2017	843307	**100669200**
Vespa Lxv 4T Euro3	125	2006	2009	436438	**100669210**
Vespa Lxv 4T Navy Euro3	125	2007	2008	436438	**100669210**
Vespa Lxv Ie 4T	125	2010	2013	436438	**100669210**
Vespa Primavera 4T 3V E4 Iget Abs	125	2016	2018	436438	**100669210**
Vespa Primavera 4T 3V E4 Iget Abs	125	2016	2018	843307	**100669200**
Vespa S 4T 3V Ie	125	2012	2012	436438	**100669210**
Vespa S 4T 3V Ie	125	2012	2012	843307	**100669200**
Vespa S 4T Euro 3	125	2007	2008	436438	**100669210**
Vespa S 4T Ie & College	125	2009	2011	436438	**100669210**
Vespa Sprint 4T 3V Ie	125	2014	2015	436438	**100669210**
Vespa Sprint 4T 3V Ie	125	2014	2015	843307	**100669200**
Vespa Sprint Iget 4T 3V Abs (Emea)	125	2016	2019	436438	**100669210**
Vespa Sprint Iget 4T 3V Abs (Emea)	125	2016	2019	843307	**100669200**
X Evo	125	2007	2016	436438	**100669210**
X10 4T 4V Ie Euro3	125	2012	2015	436438	**100669210**
X7 Euro 3	125	2008	2008	436438	**100669210**
X7 Evo Ie Euro 3	125	2009	2010	436438	**100669210**
X8	125	2004	2006	436438	**100669210**
X8 Premium Euro 2	125	2006	2006	436438	**100669210**
X8 Premium Euro 3	125	2006	2007	436438	**100669210**
X8 Street Euro 2	125	2006	2007	436438	**100669210**
X9	125	2001	2002	436438	**100669210**
X9 Evolution	125	2003	2003	436438	**100669210**
X9 Evolution	125	2005	2006	436438	**100669210**
X9 Evolution Euro3	125	2007	2007	436438	**100669210**
Zip	125	2000	2002	436438	**100669210**
Fly	150	2005	2007	436438	**100669210**
Fly Euro3	150	2008	2011	436438	**100669210**
Liberty 4T 3V Lem	150	2013	2014	436438	**100669210**



Modello *Model*	CC	Da *From*	A *To*	OEM	Codice RMS *RMS Code*
Liberty 4T 3V Lem	150	2013	2014	843307	**100669200**
Liberty 4T Euro3	150	2008	2008	436438	**100669210**
Liberty 4T Sport Euro3	150	2008	2008	436438	**100669210**
Liberty Iget 4T 3V Ie	150	2015	2018	436438	**100669210**
Liberty Iget 4T 3V Ie	150	2015	2018	843307	**100669200**
Liberty Moc 4T Euro3	150	2009	2013	436438	**100669210**
Medley 4T Ie Abs	150	2016	2018	843307	**100669200**
Vespa Gts 4T E4 Abs (Emea)	150	2016	2017	843307	**100669200**
Vespa Gts Super Ie 4T 3V Au,Ex,Jp,Ri,T,V	150	2014	2015	436438	**100669210**
Vespa Gts Super Ie 4T 3V Au,Ex,Jp,Ri,T,V	150	2014	2015	843307	**100669200**
Vespa Lt 4T 3V Ie	150	2014	2014	436438	**100669210**
Vespa Lt 4T 3V Ie	150	2014	2014	843307	**100669200**
Vespa Lx	150	2005	2006	436438	**100669210**
Vespa Lx 4T 3V Ie - Touring	150	2012	2013	436438	**100669210**
Vespa Lx 4T 3V Ie - Touring	150	2012	2013	843307	**100669200**
Vespa Lx 4T FI	150	2009	2009	436438	**100669210**
Vespa Lx Euro 3	150	2006	2008	436438	**100669210**
Vespa Lx Euro 3 Ie	150	2009	2011	436438	**100669210**
Vespa Lx Touring	150	2010	2012	436438	**100669210**
Vespa Primavera 4T 3V Iget Abs (Emea)	150	2016	2019	436438	**100669210**
Vespa Primavera 4T 3V Iget Abs (Emea)	150	2016	2019	843307	**100669200**
Vespa Primavera 4T-3V	150	2013	2016	436438	**100669210**
Vespa Primavera 4T-3V	150	2013	2016	843307	**100669200**
Vespa S 4T	150	2008	2009	436438	**100669210**
Vespa S 4T Ie & College	150	2009	2012	436438	**100669210**
Vespa Sprint 4T 3V Ie	150	2015	2015	436438	**100669210**
Vespa Sprint 4T 3V Ie	150	2015	2015	843307	**100669200**
Vespa Sprint Sport 4T 3V Iget Abs	150	2016	2018	436438	**100669210**
Vespa Sprint Sport 4T 3V Iget Abs	150	2016	2018	843307	**100669200**
X8 Street Euro 2	150	2006	2008	436438	**100669210**
X9 Amalfi	180	2000	2003	436438	**100669210**
Carnaby	200	2007	2008	436438	**100669210**
Liberty	200	2006	2006	436438	**100669210**
Liberty 4T Euro3	200	2006	2008	436438	**100669210**
Liberty 4T Sport Euro3	200	2006	2007	436438	**100669210**
Liberty Rst	200	2004	2004	436438	**100669210**
Liberty Sport	200	2006	2006	436438	**100669210**
Vespa Granturismo	200	2006	2007	436438	**100669210**
X8	200	2005	2007	436438	**100669210**
X9	200	2002	2003	436438	**100669210**
X9 Evolution	200	2003	2003	436438	**100669210**
Beverly	250	2005	2007	436438	**100669210**
Beverly Cruiser	250	2007	2009	436438	**100669210**
Beverly Euro 3 Mic	250	2007	2007	436438	**100669210**
Beverly Ie Euro 3	250	2006	2008	436438	**100669210**
Beverly Rst	250	2004	2005	436438	**100669210**
Beverly Sport	250	2006	2008	436438	**100669210**
Beverly Tourer Euro3	250	2007	2009	436438	**100669210**
Carnaby	250	2008	2009	436438	**100669210**
Mp3	250	2006	2008	436438	**100669210**
Mp3 Lt	250	2008	2009	436438	**100669210**
Mp3 Mic	250	2008	2009	436438	**100669210**
Vespa Gt 60 Euro 3	250	2006	2007	436438	**100669210**
Vespa Gts	250	2005	2014	436438	**100669210**

Modello *Model*	CC	Da *From*	A *To*	OEM	Codice RMS *RMS Code*
Vespa Gts Abs	250	2005	2012	436438	**100669210**
Vespa Gtv	250	2006	2009	436438	**100669210**
Vespa Gtv 4T Navy Euro3	250	2007	2007	436438	**100669210**
X Evo	250	2007	2013	436438	**100669210**
X7 Euro 3	250	2008	2008	436438	**100669210**
X8 Euro3	250	2005	2008	436438	**100669210**
X9 Evolution	250	2004	2004	436438	**100669210**
X9 Evolution	250	2006	2006	436438	**100669210**
Beverly Ie Abs E4 (Emea)	300	2016	2018	436438	**100669210**
Beverly Rst 4T 4V Ie Euro3	300	2010	2016	436438	**100669210**
Beverly Tourer Euro3	300	2009	2010	436438	**100669210**
Carnaby Cruiser	300	2009	2012	436438	**100669210**
Mp3 300 Ie Lt	300	2010	2011	436438	**100669210**
Mp3 300 Lt Business - Sport Abs - Enjoy	300	2014	2016	436438	**100669210**
Mp3 4T 4V Ie Erl Ibrido	300	2010	2013	436438	**100669210**
Mp3 4T 4V Ie Lt Ibrido	300	2010	2011	436438	**100669210**
Mp3 Ie E4 Lt Business - Sport Abs	300	2016	2018	436438	**100669210**
Mp3 Ie Lt- Ie Lt Sport	300	2011	2014	436438	**100669210**
Mp3 Ie Lt Touring	300	2011	2013	436438	**100669210**
Mp3 Yourban Erl	300	2011	2015	436438	**100669210**
Mp3 Yourban Lt Erl	300	2011	2016	436438	**100669210**
Mp3 Yourban Lt Rl E4	300	2017	2018	436438	**100669210**
Vespa Gts - Gts Super Ie Abs E4 (Emea)	300	2016	2018	436438	**100669210**
Vespa Gts Hpe 4T/4V Ie Abs E4	300	2019	2019	436438	**100669210**
Vespa Gts Ie & Touring	300	2012	2016	436438	**100669210**
Vespa Gts Ie Touring	300	2011	2012	436438	**100669210**
Vespa Gts Super	300	2008	2016	436438	**100669210**
Vespa Gts Super Hpe 4T/4V Ie Abs	300	2018	2019	436438	**100669210**
Vespa Gts Super Sport	300	2010	2013	436438	**100669210**
Vespa Gtv 4T 4V Ie	300	2010	2013	436438	**100669210**
Vespa Gtv Sei Giorni Ie E4 Abs (Emea)	300	2017	2017	436438	**100669210**
Vespa Gtv Via Montenapoleone	300	2010	2010	82971R	**100669210**
X7 Evo Ie Euro 3	300	2009	2010	436438	**100669210**
Beverly 4T 4V Ie Euro3 Sport Touring	350	2011	2014	436438	**100669210**
Beverly 4T St Ie Abs	350	2016	2018	436438	**100669210**
Mp3 Maxi Sport E4 Abs	350	2018	2018	436438	**100669210**
X10 4T 4V Ie Euro3	350	2012	2015	436438	**100669210**
Beverly Euro 3	400	2006	2007	436438	**100669210**
Beverly Tourer Euro3	400	2008	2010	436438	**100669210**
Mp3	400	2007	2008	436438	**100669210**
Mp3 Ie Lt - Mp3 Ie Lt Sport	400	2008	2010	436438	**100669210**
Mp3 Ie Lt Touring	400	2011	2011	436438	**100669210**
Mp3 Mic	400	2008	2010	436438	**100669210**
Mp3 Rl Touring	400	2011	2011	436438	**100669210**
X Evo	400	2007	2011	436438	**100669210**
X8 Euro3	400	2006	2008	436438	**100669210**
Beverly	500	2002	2006	436438	**100669210**
Beverly Cruiser	500	2007	2012	436438	**100669210**
Beverly Euro 3	500	2006	2008	436438	**100669210**
Mp3 Lt Business Abs	500	2014	2016	436438	**100669210**
Mp3 Lt E4 Sport - Business	500	2016	2018	436438	**100669210**
Mp3 Lt Sport - Business	500	2011	2013	436438	**100669210**
Mp3 Rl Sport - Business	500	2011	2012	436438	**100669210**
Mp3 Sport Abs	500	2014	2016	436438	**100669210**



Modello *Model*	CC	Da *From*	A *To*	OEM	Codice RMS *RMS Code*
X10 4T 4V Ie Euro3	500	2012	2014	436438	**100669210**
X9	500	2001	2002	436438	**100669210**
X9 Evolution	500	2003	2007	436438	**100669210**
X9 Evolution Abs	500	2006	2007	436438	**100669210**
SUZUKI					
An125 S-Y	125	1995	2000	09289-05011-000	**100669280**
Dr125 Sm K9-L0	125	2009	2010	09289-05011-000	**100669280**
Gz Marauder K3-K4	125	2003	2004	09289-05011-000	**100669280**
Gz Marauder K8-L0	125	2008	2010	09289-05011-000	**100669280**
Rv125 Van Van K3-L0	125	2003	2010	09289-05011-000	**100669280**
Rv125 Van Van L3	125	2013	2013	09289-05011-000	**100669280**
Rv125 Van Van L5	125	2015	2015	09289-05011-000	**100669280**
Uc Epicuro X-K1	125	1999	2001	09289-05011-000	**100669280**
Uh125 Burgman K2-L3	125	2002	2013	09289-05011-000	**100669280**
Ux Sixteen K8-L0	125	2008	2010	09289-05011-000	**100669280**
Ux Sixteen L1	125	2011	2011	09289-05011-000	**100669280**
Vl Intruder K5-K7	125	2005	2007	09289-04002-000	**100669250**
Vl Intruder Y-K1	125	2000	2001	09289-04002-000	**100669250**
An150 T-Y	150	1996	2000	09289-05011-000	**100669280**
Uc Epicuro X-K1	150	1999	2001	09289-05011-000	**100669280**
Uh200 Burgman K2-K6	150	2002	2006	09289-05011-000	**100669280**
Ux Sixteen K8-L0	150	2008	2010	09289-05011-000	**100669280**
Ux Sixteen L1	150	2011	2011	09289-05011-000	**100669280**
An250 Burgman W-L3	250	1998	2013	09289-05011-000	**100669280**
Rm-Z250 K7-K9	250	2007	2009	09289-04002-000	**100669250**
Rm-Z250 L0	250	2010	2017	09289-04002-000	**100669250**
Vl Intruder K5-K7	250	2005	2007	09289-04002-000	**100669250**
Vl Intruder Y-K1	250	2000	2001	09289-04002-000	**100669250**
Dr350S L-R	350	1990	1994	09289-05011-000	**100669280**
Dr350Se R-W	350	1994	1998	09289-05011-000	**100669280**
An400 Burgman K7-L6	400	2007	2016	09289-04002-000	**100669250**
An400 Burgman X-K6	400	1999	2006	09289-05011-000	**100669280**
Dr-Z400 Y-K3	400	2000	2003	09289-05011-000	**100669280**
Dr-Z400E K5-K7	400	2005	2007	09289-05011-000	**100669280**
Dr-Z400S K5-K9	400	2005	2009	09289-05011-000	**100669280**
Dr-Z400S Y-K4	400	2000	2004	09289-05011-000	**100669280**
Dr-Z400Sm K5-K9	400	2005	2009	09289-05011-000	**100669280**
Gsf400 Bandit M-P	400	1991	1993	09289-04002-000	**100669250**
Lt-A400F Kingquad 4X4 K8-L0	400	2008	2010	09289-05011-000	**100669280**
Lt-A400F Kingquad 4X4 L1	400	2011	2011	09289-05011-000	**100669280**
Lt-F Kingquad Fs 4X2 K8-L0	400	2008	2010	09289-05011-000	**100669280**
Lt-F Kingquad Fs 4X4 K8-L0	400	2008	2010	09289-05011-000	**100669280**
Lt-F Kingquad Fs 4X4 L1	400	2011	2011	09289-05011-000	**100669280**
Lt-F Kingquad Fs 4X4 L2	400	2012	2012	09289-05011-000	**100669280**
Lt-Z Quadsport K4-K7	400	2004	2007	09289-05011-000	**100669280**
Lt-Z Quadsport K8	400	2008	2008	09289-05011-000	**100669280**
Lt-Z Quadsport K9-L0	400	2009	2010	09289-05011-000	**100669280**
Lt-Z Quadsport L1	400	2011	2011	09289-05011-000	**100669280**
Lt-Z Quadsport L2	400	2012	2012	09289-05011-000	**100669280**
Lt-A450X Kingquad 4X4 K7-L0	450	2007	2010	09289-05011-000	**100669280**
Rm-Z450 K5-K6	450	2005	2006	09289-05011-000	**100669280**
Lt-A Kingquad X L2	500	2012	2012	09289-05011-000	**100669280**
Lt-A Kingquad Xp K9-L0	500	2009	2010	09289-05011-000	**100669280**
Lt-A Kingquad Xp L1	500	2011	2011	09289-05011-000	**100669280**
Lt-A Kingquad Xp L2	500	2012	2012	09289-05011-000	**100669280**
Lt-A500F Vinson K4-K7	500	2004	2007	09289-05011-000	**100669280**
Gsf600 Bandit S-W	600	1995	1998	09289-05011-000	**100669280**
Gsf600 Bandit Y-K4	600	2000	2004	09289-05011-000	**100669280**

Modello *Model*	CC	Da *From*	A *To*	OEM	Codice RMS *RMS Code*
Gsx600F J-S	600	1988	1995	09289-05011-000	**100669280**
Gsx600F W-K6	600	1998	2006	09289-05011-000	**100669280**
Gsx-R600 K4-L7	600	2004	2017	09289-04002-000	**100669250**
Gsx-R600 V-Y	600	1997	2000	09289-04002-000	**100669250**
Rf600R P-T	600	1993	1996	09289-04002-000	**100669250**
An650 Burgman L4	650	2014	2014	09289-04002-000	**100669250**
Dl650 V-Strom K4-K6	650	2004	2006	09289-04002-000	**100669250**
Dl650 V-Strom K7-L2	650	2007	2012	09289-04002-000	**100669250**
Dl650A V-Strom Abs L3-L5	650	2013	2015	09289-04002-000	**100669250**
Dl650A(Ue)/Xa(Ue)L6 V-Strom	650	2016	2016	09289-04002-000	**100669250**
Dl650Xt V-Strom	650	2015	2015	09289-04002-000	**100669250**
Gsf Bandit K5-K6	650	2005	2006	09289-05011-000	**100669280**
Gsf Bandit K7-L2	650	2007	2012	09289-04002-000	**100669250**
Gsx F K8-L0	650	2008	2010	09289-04002-000	**100669250**
Gsx F L1	650	2011	2011	09289-04002-000	**100669250**
Gsx F L2	650	2012	2012	09289-04002-000	**100669250**
Sfv Gladius K9-L4	650	2009	2014	09289-04002-000	**100669250**
Sfv650(U/A/Ua)Gladius L5	650	2015	2015	09289-04002-000	**100669250**
Sv650 K3-K7	650	2003	2007	09289-04002-000	**100669250**
Sv650 K8-L0	650	2008	2010	09289-04002-000	**100669250**
Sv650 X-K2	650	1999	2002	09289-04002-000	**100669250**
Sv650A L7	650	2017	2017	09289-04002-000	**100669250**
Sv650Sl5	650	2015	2015	09289-04002-000	**100669250**
Gsx750 W-K1	750	1998	2001	09289-05011-000	**100669280**
Gsx750F K4-K6	750	2004	2006	09289-05011-000	**100669280**
Gsx750F K-T	750	1989	1996	09289-05011-000	**100669280**
Gsx750F W-K3	750	1998	2003	09289-05011-000	**100669280**
Gsx-R750 F-L	750	1985	1990	09289-05011-000	**100669280**
Gsx-R750 K4-L0	750	2004	2010	09289-04002-000	**100669250**
Gsx-R750 L2-L7	750	2012	2017	09289-04002-000	**100669250**
Gsx-R750 T-X	750	1996	1999	09289-04002-000	**100669250**
Gsx-R750M	750	1991	1991	09289-05011-000	**100669280**
Gsx-R750Sp R	750	1994	1994	09289-04002-000	**100669250**
Gsx-R750W N-S	750	1992	1995	09289-04002-000	**100669250**
Rf900R R-T	900	1994	1996	09289-04002-000	**100669250**
Gsx-R1000 K5-L5	1000	2005	2015	09289-04002-000	**100669250**
Gsx-R1000(A) L6	1000	2016	2016	09289-04002-000	**100669250**
Gsx-R1000A Abs L5	1000	2015	2015	09289-04002-000	**100669250**
Gsx-R1000Z L4	1000	2014	2014	09289-04002-000	**100669250**
Gsx-S1000 L6	1000	2016	2016	09289-04002-000	**100669250**
Gsx-S1000F L6	1000	2016	2016	09289-04002-000	**100669250**
Gsx F J-P	1100	1988	1993	09289-05011-000	**100669280**
Gsx-R G-J	1100	1986	1988	09289-05011-000	**100669280**
Gsx-R K-L	1100	1989	1990	09289-05011-000	**100669280**
Gsx-R M-N	1100	1991	1992	09289-05011-000	**100669280**
Gsx-R W P-T	1100	1993	1996	09289-04002-000	**100669250**
Gsf Bandit K1-K5	1200	2001	2005	09289-05011-000	**100669280**
Gsf Bandit K6	1200	2006	2006	09289-05011-000	**100669280**
Gsx X-K1	1200	1999	2001	09289-05011-000	**100669280**
Gsf1250 Bandit K7-L0	1250	2007	2010	09289-04002-000	**100669250**
Gsf1250 Bandit L0-L1	1250	2010	2011	09289-04002-000	**100669250**
Gsf1250S Bandit L1-L2	1250	2011	2012	09289-04002-000	**100669250**
Gsf1250Sa Bandit L5-L6	1250	2015	2016	09289-04002-000	**100669250**
Gsx1250Fa L0-L2	1250	2010	2012	09289-04002-000	**100669250**
Gsx1250Fa L6	1250	2016	2016	09289-04002-000	**100669250**
Gsx1300Bk B-King K8-L0	1300	2008	2010	09289-05011-000	**100669280**
Gsx1300Ra Hayabusa L6	1300	2016	2016	09289-05011-000	**100669280**
Gsx1300Ra Hayabusa L7	1300	2017	2017	09289-05011-000	**100669280**

Modello *Model*	CC	Da *From*	A *To*	OEM	Codice RMS *RMS Code*
Gsx1300Raz Hayabusa L4	1300	2014	2014	09289-05011-000	**100669280**
Gsz1300R Hayabusa X-L3	1300	1999	2013	09289-05011-000	**100669280**
Gsx K2-K7	1400	2002	2007	09289-04002-000	**100669250**
SYM					
Fiddle II S	50	2009	2013	12209H6B900	**100669290**
Fiddle III	50	2014	2014	12209H6B900	**100669290**
Jet4	50	2009	2010	12209H6B000	**100669290**
Mio	50	2006	2007	12209H6B900	**100669290**
Mio	50	2009	2009	12209H6B900	**100669290**
Simply II	50	2014	2014	12209H6B900	**100669290**
Symphony	50	2009	2009	12209H6B900	**100669290**
Symphony S	50	2010	2014	12209H6B900	**100669290**
Symphony Sr	50	2010	2014	12209H6B900	**100669290**
Symphony St	50	2015	2015	12209H6B900	**100669290**
Symply II	50	2009	2009	12209H6B900	**100669290**
X Pro	50	2013	2013	12209H6B900	**100669290**
Mio Euro2	100	2005	2006	12209H6B000	**100669290**
Mio Euro3	100	2007	2008	12209H6B900	**100669290**
Fiddle II	125	2010	2013	12209H6B900	**100669290**
Fiddle III	125	2014	2014	12209H6B900	**100669290**
Gts Joymax	125	2006	2007	12209H6B900	**100669290**
Hd Eu2	125	2003	2004	12209H6B000	**100669290**
Hd Euro3	125	2007	2008	12209H6B000	**100669290**
Hd Evo	125	2005	2006	12209H6B000	**100669290**
Hd Evo Euro3	125	2007	2008	12209H6B000	**100669290**
Hd Evo Euro3	125	2010	2011	12209H6B900	**100669290**
Hd Evo Tamburo Euro3	125	2008	2009	12209H6B900	**100669290**
Hd2	125	2011	2011	12209H6B900	**100669290**
Hd2	125	2014	2014	12209H6B900	**100669290**
Jet V	125	2011	2011	12209H6B900	**100669290**
Jet4	125	2009	2010	12209H6B000	**100669290**
Joyride Eu2	125	2003	2004	12209H6B000	**100669290**
Joyride Euro2	125	2005	2006	12209H6B000	**100669290**
Joyride Euro3	125	2007	2007	12209H6B900	**100669290**
Joyride Evo	125	2009	2010	12209H6B000	**100669290**
Joyride Evo	125	2013	2014	12209H6B900	**100669290**
Megalo	125	2006	2007	12209H6B900	**100669290**
Symphony	125	2009	2009	12209H6B900	**100669290**
Symphony S	125	2009	2010	12209H6B900	**100669290**
Symphony S	125	2012	2014	12209H6B900	**100669290**
Symphony S Euro4	125	2016	2016	12209H6B900	**100669290**
Symphony Sr	125	2010	2010	12209H6B900	**100669290**
Symphony Sr	125	2012	2014	12209H6B900	**100669290**
Symphony St Euro4	125	2016	2016	12209H6B900	**100669290**
Symply II	125	2014	2014	12209H6B900	**100669290**
Vs	125	2006	2006	12209H6B900	**100669290**
Vs Euro3	125	2007	2008	12209H6B900	**100669290**
X Pro	125	2013	2013	12209H6B900	**100669290**
Fiddle II	150	2010	2010	12209H6B900	**100669290**
Fiddle II	150	2012	2012	12209H6B900	**100669290**
Joyride	150	2001	2002	12209H6B000	**100669290**
Symphony S	150	2009	2009	12209H6B000	**100669290**
Symphony S	150	2010	2010	12209H6B900	**100669290**
Symphony S	150	2012	2014	12209H6B900	**100669290**
Symphony Sr	150	2010	2010	12209H6B900	**100669290**
Symphony Sr	150	2012	2014	12209H6B900	**100669290**
Vs	150	2006	2006	12209H6B900	**100669290**
Vs Euro3	150	2007	2008	12209H6B900	**100669290**

Modello *Model*	CC	Da *From*	A *To*	OEM	Codice RMS *RMS Code*
Track Runner	180	2006	2007	12209H6B900	**100669290**
Fiddle III	200	2015	2015	12209H6B900	**100669290**
Hd Eu2	200	2003	2004	12209H6B000	**100669290**
Hd Euro3 I	200	2007	2007	12209H6B900	**100669290**
Hd Evo Euro2	200	2005	2006	12209H6B000	**100669290**
Hd Evo Euro3 I	200	2007	2007	12209H6B900	**100669290**
Hd Evo I Euro3	200	2010	2012	12209H6B900	**100669290**
Hd Evo I Tamburo Euro3	200	2008	2009	12209H6B900	**100669290**
Hd2 I	200	2011	2011	12209H6B900	**100669290**
Hd2 I	200	2014	2014	12209H6B900	**100669290**
Joyride	200	2003	2003	12209H6B000	**100669290**
Joyride Eu2	200	2003	2004	12209H6B000	**100669290**
Joyride Euro2	200	2005	2006	12209H6B900	**100669290**
Joyride Evo I	200	2009	2009	12209H6B900	**100669290**
Joyride Evo I	200	2013	2014	12209H6B900	**100669290**
Joyride I Euro3	200	2007	2009	12209H6B900	**100669290**
Joyride I Evo	200	2010	2010	12209H6B900	**100669290**
Symphony St	200	2015	2015	12209H6B900	**100669290**
Gts	250	2007	2008	12209H6B900	**100669290**
Gts 250	250	2006	2007	12209H6B000	**100669290**
Joymax	250	2005	2007	12209H6B000	**100669290**
Joymax Euro3 I	250	2007	2008	12209H6B900	**100669290**
Quad Lander	250	2006	2007	12209H6B900	**100669290**
Sb 250Ni	250	2012	2012	12209H6B900	**100669290**
Citycom	300	2008	2009	12209H6B900	**100669290**
Citycom I Cbs	300	2012	2012	12209H6B900	**100669290**
Citycom S 300 I Cbs	300	2015	2015	12209H6B900	**100669290**
Joymax Evo	300	2009	2009	12209H6B900	**100669290**
Joymax Evo I	300	2010	2010	12209H6B900	**100669290**
Joymax I	300	2012	2012	12209H6B900	**100669290**
Joymax I	300	2014	2014	12209H6B900	**100669290**
Joymax I Abs	300	2013	2014	12209H6B900	**100669290**
Quad Lander	300	2008	2008	12209H6B900	**100669290**
Quad Lander S	300	2007	2008	12209H6B900	**100669290**
Maxsym I	400	2011	2012	12209H6B900	**100669290**
Maxsym I Abs	400	2012	2012	12209H6B900	**100669290**
Quad Raider	600	2008	2008	12209H6B900	**100669290**
TRIUMPH					
Daytona 675	675	2013	2013	-	**100669300**
Daytona 675 Abs	675	2013	2017	-	**100669300**
Daytona 675 R	675	2011	2012	-	**100669300**
Daytona 675 R Abs	675	2013	2017	-	**100669300**
Bonneville 900 Efi T100 Abs	900	2017	2018	-	**100669250**
Bonneville 900 Efi T100 Abs	900	2018	2019	-	**100669250**
Bonneville 900 Efi T100 Black Abs	900	2017	2018	-	**100669250**
Bonneville 900 Efi T100 Black Abs	900	2018	2019	-	**100669250**
Street Cup 900 Efi Abs	900	2017	2019	-	**100669250**
Street Scrambler 900 Efi Abs	900	2017	2019	-	**100669250**
Street Twin 900 Efi Abs	900	2016	2019	-	**100669250**
Daytona 955 I Doppio Braccio	955	2002	2002	-	**100669250**
Daytona 955 I Mono Braccio	955	2002	2006	-	**100669250**
Speed Triple 955 Efi	955	2002	2004	-	**100669250**
Sprint 955 Rs Doppio Braccio	955	2002	2002	-	**100669250**
Sprint 955 Rs Einarmschwinge Last Edition	955	2004	2004	-	**100669250**
Sprint 955 Rs Mono Braccio	955	2002	2003	-	**100669250**
Sprint 955 St	955	2002	2004	-	**100669250**



Modello *Model*	CC	Da *From*	A *To*	OEM	Codice RMS *RMS Code*
Speed Triple 1050	1050	2005	2013	-	**100669250**
Speed Triple 1050 94 Abs	1050	2015	2016	-	**100669250**
Speed Triple 1050 Abs	1050	2011	2016	-	**100669250**
Speed Triple 1050 R 94 Abs	1050	2015	2016	-	**100669250**
Speed Triple 1050 R Abs	1050	2012	2018	-	**100669250**
Speed Triple 1050 Rs Abs	1050	2018	2019	-	**100669250**
Speed Triple 1050 S Abs	1050	2016	2019	-	**100669250**
Sprint 1050 Gt Abs	1050	2010	2014	-	**100669250**
Sprint 1050 Gt Se Abs	1050	2017	2017	-	**100669250**
Sprint 1050 St	1050	2005	2010	-	**100669250**
Sprint 1050 St Abs	1050	2006	2010	-	**100669250**
Tiger 1050	1050	2007	2010	-	**100669250**
Tiger 1050 Abs	1050	2007	2011	-	**100669250**
Tiger 1050 Se	1050	2010	2012	-	**100669250**
Tiger 1050 Se Abs	1050	2011	2013	-	**100669250**
Tiger 1050 Sport Abs	1050	2013	2019	-	**100669250**
Bonneville 1200 Bobber Abs	1200	2017	2019	-	**100669250**
Bonneville 1200 Bobber Black Abs	1200	2018	2019	-	**100669250**
Bonneville 1200 Speedmaster	1200	2018	2019	-	**100669250**
Bonneville 1200 T120 Abs	1200	2016	2019	-	**100669250**
Bonneville 1200 T120 Black Abs	1200	2016	2019	-	**100669250**
Scrambler 1200 Xc Abs	1200	2019	2019	-	**100669250**
Scrambler 1200 Xe Abs	1200	2019	2019	-	**100669250**
Speed Twin 1200 Abs	1200	2019	2019	-	**100669250**
Thruxton 1200 Abs	1200	2016	2019	-	**100669250**
Thruxton 1200 R Abs	1200	2016	2019	-	**100669250**
Tiger 1200 Xca Abs	1200	2018	2019	-	**100669250**
Tiger 1200 Xcx Abs	1200	2018	2019	-	**100669250**
Tiger 1200 Xr Abs	1200	2018	2019	-	**100669250**
Tiger 1200 Xrt Abs	1200	2018	2019	-	**100669250**
Tiger 1200 Xrx Abs	1200	2018	2019	-	**100669250**
Tiger 1200 Xrx Low Abs	1200	2018	2019	-	**100669250**
Tiger Explorer 1200 Abs	1200	2012	2016	-	**100669250**
Tiger Explorer 1200 Spoked Abs	1200	2016	2016	-	**100669250**
Tiger Explorer 1200 Xc Abs	1200	2013	2017	-	**100669250**
Tiger Explorer 1200 Xca Abs	1200	2016	2017	-	**100669250**
Tiger Explorer 1200 Xcx Abs	1200	2016	2017	-	**100669250**
Tiger Explorer 1200 Xcx Low Abs	1200	2016	2017	-	**100669250**
Tiger Explorer 1200 Xr Abs	1200	2016	2017	-	**100669250**
Tiger Explorer 1200 Xrt Abs	1200	2016	2017	-	**100669250**
Tiger Explorer 1200 Xrx Abs	1200	2016	2017	-	**100669250**
Tiger Explorer 1200 Xrx Low Abs	1200	2016	2017	-	**100669250**
Trophy 1215 Abs	1215	2013	2014	-	**100669250**
Trophy 1215 Se Abs	1215	2013	2017	-	**100669250**
YAMAHA					
Ns50F Aerox F	50	2014	2016	5STE21190000	**100669270**
Xf Giggle	50	2008	2008	5STE21190000	**100669270**
Yn F Neo'S 4	50	2009	2012	5STE21190000	**100669270**
Yn F Neo'S 4	50	2012	2015	5STE21190000	**100669270**
Hw Xenter	125	2012	2016	52SE21190000	**100669250**
Mt125	125	2015	2016	1PAE21190000	**100669300**
Mt125A	125	2015	2019	1PAE21190000	**100669300**
Sr	125	1999	2000	5H0121190000	**100669220**
Tw	125	1999	2001	5H0121190000	**100669220**
Tw	125	2003	2003	5H0121190000	**100669220**

Modello *Model*	CC	Da *From*	A *To*	OEM	Codice RMS *RMS Code*
Vp X-City	125	2008	2011	5YPE21190000	**100669300**
Wr125R	125	2009	2011	5YPE21190000	**100669300**
Wr125X	125	2009	2011	5YPE21190000	**100669300**
Wr125X	125	2013	2014	5YPE21190000	**100669300**
Xc125R Majesty S	125	2014	2014	52SE21190000	**100669250**
Yp125R X-Max	125	2006	2012	5YPE21190000	**100669300**
Yp125R X-Max	125	2012	2013	5YPE21190000	**100669300**
Yp125R X-Max	125	2014	2016	1PAE21190000	**100669300**
Yp125R X-Max Abs	125	2011	2011	5YPE21190000	**100669300**
Yp125Ra X-Max Abs	125	2013	2013	5YPE21190000	**100669300**
Yp125Ra X-Max Abs	125	2014	2019	1PAE21190000	**100669300**
Yp125Ra X-Max Abs Iron Max	125	2019	2019	1PAE21190000	**100669300**
Yzf-R125	125	2008	2013	5YPE21190000	**100669300**
Yzf-R125	125	2014	2015	1PAE21190000	**100669300**
Yzf-R125A	125	2015	2018	1PAE21190000	**100669300**
Hw Xenter	150	2012	2016	52SE21190000	**100669250**
Tw	200	1994	1994	5H0121190000	**100669220**
Vp X-City	250	2007	2015	5H0121190000	**100669220**
Wr250F	250	2001	2011	4TV121190000	**100669320**
Xg Tricker	250	2005	2005	5H0121190000	**100669220**
Ybr	250	2007	2011	5H0121190000	**100669220**
Yp250 Majesty	250	1996	1998	5H0121190000	**100669220**
Yp250 Majesty	250	2000	2003	5H0121190000	**100669220**
Yp250 Majesty Abs	250	2003	2003	5H0121190000	**100669220**
Yp250 Majesty Dx	250	1998	1999	5H0121190000	**100669220**
Yp250R Black X-Max	250	2009	2009	5H0121190000	**100669220**
Yp250R X-Max	250	2005	2012	5H0121190000	**100669220**
Yp250R X-Max	250	2012	2016	5H0121190000	**100669220**
Yp250R X-Max Sport	250	2011	2012	5H0121190000	**100669220**
Yp250Ra X-Max Abs	250	2011	2012	5H0121190000	**100669220**
Yp250Ra X-Max Abs	250	2012	2016	5H0121190000	**100669220**
Yz250F	250	2001	2013	4TV121190000	**100669320**
Xc Versity	300	2003	2006	5H0121190000	**100669220**
Mt-03A	320	2016	2016	1PAE21190000	**100669300**
Mt-03A	320	2018	2019	1PAE21190000	**100669300**
Yzf-R3A	320	2015	2019	1PAE21190000	**100669300**
Yp400 Majesty	400	2007	2011	3P6121290000	**100669310**
Yp400 Majesty Abs	400	2007	2011	3P6121290000	**100669310**
Yp400R X-Max	400	2013	2016	3P6121290000	**100669310**
Yp400R X-Max Momodesign	400	2014	2014	3P6121290000	**100669310**
Yp400Ra X-Max Abs	400	2014	2017	3P6121290000	**100669310**
Yp400Ra X-Max Ironmax Abs	400	2016	2016	3P6121290000	**100669310**
Yp400Ra X-Max Momodesign Abs	400	2014	2014	3P6121290000	**100669310**
Xp T-Max	500	2001	2011	4TV121190000	**100669320**
Xp T-Max Abs	500	2005	2011	4TV121190000	**100669320**
Xp T-Max Abs Sv	500	2010	2011	4TV121190000	**100669320**
Xp T-Max Black Max	500	2006	2006	4TV121190000	**100669320**
Xp T-Max Black Max-Night Max	500	2007	2007	4TV121190000	**100669320**
Xp T-Max Sv	500	2011	2011	4TV121190000	**100669320**
Xp T-Max White Max	500	2010	2010	4TV121190000	**100669320**
Xp T-Max	530	2012	2016	4TV121190000	**100669320**
Xp T-Max Abs	530	2012	2016	4TV121190000	**100669320**
Xp T-Max Sp	530	2015	2015	4TV121190000	**100669320**
Xp T-Max Sp Abs	530	2015	2016	4TV121190000	**100669320**
Xz550	550	1982	1985	5H0121190000	**100669220**
Fz6	600	2004	2007	4TV121190000	**100669320**
Fz6 Fazer	600	2004	2007	4TV121190000	**100669320**



Modello *Model*	**CC**	**Da** *From*	**A** *To*	**OEM**	**Codice RMS** *RMS Code*
Fz6 Fazer Abs	600	2006	2007	4TV121190000	**100669320**
Fz6 Fazer S2	600	2007	2008	4TV121190000	**100669320**
Fz6 Fazer S2 Abs	600	2008	2008	4TV121190000	**100669320**
Fz6 Ns	600	2005	2006	4TV121190000	**100669320**
Fz6 S2	600	2007	2008	4TV121190000	**100669320**
Fzr R	600	1994	1995	4TV121190000	**100669320**
Fzs Fazer	600	1998	1999	4TV121190000	**100669320**
Fzs Fazer	600	2002	2003	4TV121190000	**100669320**
Fzs Fazer (Fzs600S)	600	2000	2001	4TV121190000	**100669320**
Xj6-F Diversion	600	2010	2011	4TV121190000	**100669320**
Xj6-Fa Diversion Abs	600	2010	2011	4TV121190000	**100669320**
Xj6-N	600	2009	2011	4TV121190000	**100669320**
Xj6-N	600	2013	2013	4TV121190000	**100669320**
Xj6-N Sp	600	2013	2013	4TV121190000	**100669320**
Xj6-Na Abs	600	2013	2015	4TV121190000	**100669320**
Xj6-S Diversion	600	2009	2011	4TV121190000	**100669320**
Xj6-S Diversion	600	2013	2015	4TV121190000	**100669320**
Xj6-S Diversion Abs	600	2013	2015	4TV121190000	**100669320**
Yzf R Thunder Cat	600	1996	2002	4TV121190000	**100669320**
Yzf R46	600	2005	2005	4TV121190000	**100669320**
Yzf-R6	600	1999	2005	4TV121190000	**100669320**
Mt-03	660	2006	2012	5H0121190000	**100669220**
Szr	660	1995	1997	5H0121190000	**100669220**
Xt660R	660	2004	2011	5H0121190000	**100669220**
Xt660R	660	2014	2014	5H0121190000	**100669220**
Xt660X	660	2004	2011	5H0121190000	**100669220**
Xt660X	660	2014	2014	5H0121190000	**100669220**
Xt660Z Tenere	660	1991	1996	5H0121190000	**100669220**
Xt660Z Tenere	660	2008	2015	5H0121190000	**100669220**
Xt660Za Tenere	660	2011	2011	5H0121190000	**100669220**
Xt660Za Tenere	660	2015	2015	5H0121190000	**100669220**
Mtm690 Xsr700	700	2018	2019	1PAE21190000	**100669300**

Modello *Model*	**CC**	**Da** *From*	**A** *To*	**OEM**	**Codice RMS** *RMS Code*
Mtm690-U Xsr700	700	2018	2019	1PAE21190000	**100669300**
Mtt690-A Tracer	700	2018	2018	1PAE21190000	**100669300**
Scr950	950	2017	2017	5H0121190000	**100669220**
Xv950	950	2014	2014	5H0121190000	**100669220**
Xv950 Racer	950	2015	2016	5H0121190000	**100669220**
Xv950Cu	950	2014	2016	5H0121190000	**100669220**
Xv950R	950	2014	2017	5H0121190000	**100669220**
Xvs950A Midnight Star	950	2009	2012	5H0121190000	**100669220**
Fz1	1000	2006	2009	4TV121190000	**100669320**
Fz1 Fazer	1000	2006	2012	4TV121190000	**100669320**
Fz1 Fazer Abs	1000	2007	2008	4TV121190000	**100669320**
Fz1 Fazer Abs	1000	2011	2012	4TV121190000	**100669320**
Fz1-N	1000	2011	2011	4TV121190000	**100669320**
Fz1-Na	1000	2010	2011	4TV121190000	**100669320**
Fzs Fazer	1000	2001	2005	4TV121190000	**100669320**
Mt-10	1000	2016	2016	3P6121290000	**100669310**
Yzf-R1	1000	1998	2006	4TV121190000	**100669320**
Yzf-R1	1000	2007	2016	3P6121290000	**100669310**
Yzf-R1M	1000	2015	2016	3P6121290000	**100669310**
Yzf-R1Sp	1000	2006	2006	4TV121190000	**100669320**
Fjr1300A	1300	2016	2016	3P6121290000	**100669310**
Fjr1300A Abs	1300	2006	2008	3P6121290000	**100669310**
Fjr1300A Abs	1300	2010	2011	3P6121290000	**100669310**
Fjr1300A Abs	1300	2013	2015	3P6121290000	**100669310**
Fjr1300Ae	1300	2014	2016	3P6121290000	**100669310**
Fjr1300As	1300	2006	2008	3P6121290000	**100669310**
Fjr1300As	1300	2015	2016	3P6121290000	**100669310**
Xvs1300A Midnight Star	1300	2007	2008	5H0121190000	**100669220**
Xvs1300A Midnight Star	1300	2011	2016	5H0121190000	**100669220**
Xvs1300Cu Custom	1300	2014	2016	5H0121190000	**100669220**
V-Max	1700	2009	2016	3P6121290000	**100669310**

100669200

Confezioni 10 Pz. | *10 Pcs Packing*

APRILIA-PIAGGIO: 843307

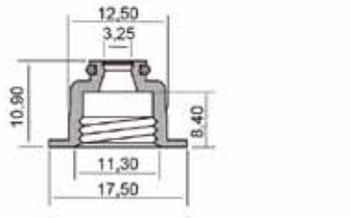

100669210

Confezioni 10 Pz. | *10 Pcs Packing*

APRILIA-DERBI-GILERA: 436438
PEUGEOT: 756140
PIAGGIO: 436438

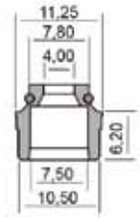

100669220

Confezioni 10 Pz. | *10 Pcs Packing*

APRILIA: AP8122606
YAMAHA: 5H0121190000

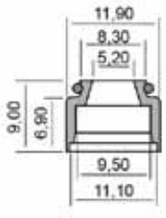

100669230

Confezioni 10 Pz. | *10 Pcs Packing*

APRILIA: AP0650120

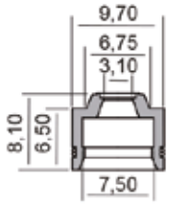

100669240

Confezioni 10 Pz. | *10 Pcs Packing*

HONDA: 12209-GB4-681
KYMCO: 00122779

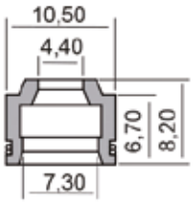

100669250

Confezioni 10 Pz. | *10 Pcs Packing*

HONDA: 12209-MA6-003
PEUGEOT: 766514
SUZUKI: 09289-04002-000
YAMAHA: 52SE21190000

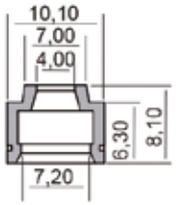

100669260

Confezioni 10 Pz. | *10 Pcs Packing*

PEUGEOT: 800984

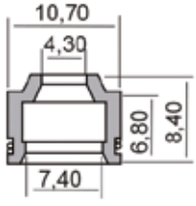

100669270

Confezioni 10 Pz. | *10 Pcs Packing*

YAMAHA: 5STE21190000

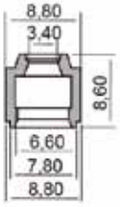

100669280

Confezioni 10 Pz. | *10 Pcs Packing*

SUZUKI: 09289-05011-000

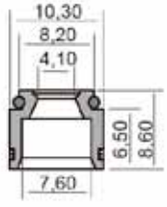

100669290

Confezioni 10 Pz. | *10 Pcs Packing*

SYM: 12209H6B900

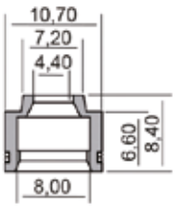

100669300

Confezioni 10 Pz. | *10 Pcs Packing*

HONDA: 12208-ML0-721 - 12208-ML0-722
YAMAHA: 5YPE21190000

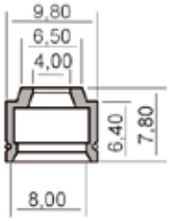

100669310

Confezioni 10 Pz. | *10 Pcs Packing*

YAMAHA: 3P6121290000

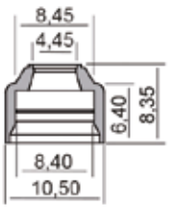

100669320

Confezioni 10 Pz. | *10 Pcs Packing*

YAMAHA: 4TV121190000

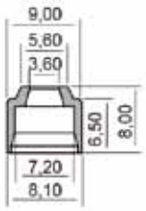

100706210

GUARNIZIONE COPERCHIO FRIZIONE | *CLUTCH COVER GASKET*
Confezioni 5 Pz. | *5 Pcs Packing*

PIAGGIO 150: Vespa GL • Sprint
125-150: Vespa PXX
R.O. 017881

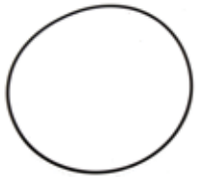

100706220

O-RING LEVETTA CAMBIO 6,75x2 mm | *O-RING LEVER CHANGE 6,75x2 mm*
Confezioni 50 Pz. | *50 Pcs Packing*

PIAGGIO 50-90-125: Vespa Primavera ET3
V5A1-V5B1-V5B2-V9A1-VMA2-VMB1
R.O. 006706

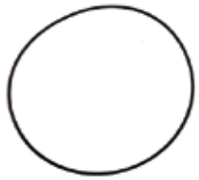

100706230

O-RING LEVETTA CAMBIO 8,73x1,78 mm | *O-RING LEVER CHANGE 8,73x1,78 mm*
Confezioni 50 Pz. | *50 Pcs Packing*

PIAGGIO: Vespa PK • PX
V5X1T-V5X2T-V5X3T-VN1XT-VLX1T
R.O. 006708



100706240

O-RING PER CAMMA FRENO 11,11x1,78 mm | *O-RING REAR CAM 11,11x1,78 mm*
Confezioni 50 Pz. | *50 Pcs Packing*

PIAGGIO 125-150-200: Vespa PX
VN1XT-VLX1T-VSX1T
R.O. 006714



100706250

O-RING PER SETTORE M. MOTO 15,88x2,62 mm | *O-RING KICK STARTER SECTOR 15,88x2,62 mm*
Confezioni 50 Pz. | *50 Pcs Packing*

PIAGGIO 125-150-200: Vespa PX
VN1XT-VLX1T-VSX1T
R.O. 006721



100706260

O-RING PER PERNO RUOTA 23,4x3,53 mm | *O-RING HUB 23,4x3,53 mm*
Confezioni 50 Pz. | *50 Pcs Packing*

PIAGGIO 125-150-200: Vespa PX
VN1XT-VLX1T-VSX1T
R.O. 006731



100706270

O-RING CARTER | *O-RING CRANKCASE*
Confezioni 50 Pz. | *50 Pcs Packing*

PIAGGIO 50-90-125: Vespa Primavera ET3
V5A1-V5B1-V5B2-V9A1-VMA2-VMB1
R.O. 006716



100706280

O-RING PERNO SOSPENSIONE | *O-RING FRONT WHEEL PIN*
Confezioni 50 Pz. | *50 Pcs Packing*

PIAGGIO 125-150-200: Vespa PX VN1XT-VLX1T-VSX1T
R.O. 177408



100706290

O-RING MOZZO POSTERIORE | *O-RING REAR HUB*
Confezioni 50 Pz. | *50 Pcs Packing*

PIAGGIO 125-150-200: Vespa PX VN1XT-VLX1T-VSX1T
R.O. 78163



100706300

O-RING MOZZO POSTERIORE | *O-RING REAR HUB*
Confezioni 50 Pz. | *50 Pcs Packing*

PIAGGIO: Vespa old models
R.O. 79164



100709000

KIT O-RING 382 PZ. 32 MISURE NBR | *KIT O-RING 382 PCS. 32 SIZES NBR*



100709010

O-RING COPERCHIO VALVOLE | *VALVE COVER O-RING*
Confezioni 5 Pz. | *5 Pcs Packing*

KYMCO 50: Agility 4T • Dink 4T • Filly Lx • Like 4T • People S 4T • Super 8 4T • Vitality 4T
R.O. 00102064



100709020

O-RING COPERCHIO VALVOLE | *VALVE COVER O-RING*
Confezioni 5 Pz. | *5 Pcs Packing*

KYMCO 125-150-200: Agility R16 4T
R.O. 00122754



100709030

KIT O-RING
Kit 7 Pz. | *7 Pcs Kit*

PIAGGIO: Vespa PX • Vespa Sprint



GOMME
TIRES
NEUMATICOS
PNEUS



Pneus
Chambres à Air
Rubans de Jante
Valves



Neumaticos
Camaras
Cinta de Llanta
Valvulas



Tires
Tubes
Rim Tapes
Valves



GOMME **1480**
CAMERE D'ARIA **1492**
FLAP® **1493**
VALVOLE **1494**

IL LINGUAGGIO DELLE SCOLPITURE	
COMAND 2	Stradale
MAC P	Stradale posteriore
MICH	Scolpitura tradizionale stradale
MICH M+S	Scolpitura tradizionale stradale invernale
BOPP	Sportivo stradale
ROAD	Stradale
REGGAE	Tassellato largo doppio uso
MAC F	Stradale anteriore
SLICK	Scolpitura liscia stradale

IL LINGUAGGIO DELLE SCOLPITURE	
DEXT	Tassello misto stradale
DEXT M+S	Tassello misto stradale - All seasons
DRAGO F	Scolpitura liscia stradale anteriore
DRAGO	Scolpitura liscia stradale posteriore
COMAND P	Stradale posteriore
DRAKE	Scolpitura liscia stradale posteriore
ROCK	Sterrato
UNIK	Tassellato medio stradale
CHOCOLATE	Tassello alto fuoristrada
CLASSIC	Tassello quadro stradale

COME "SCEGLIERE" UN PNEUMATICO - *HOW TO "CHOOSE" A TYRE*	
1	Marchio di fabbrica - *Trade-Mark*
2	Senso di rotolamento - *Sense of Rotation*
3	Pneumatico senza camera aria - *Tyre without tube "Tubeless"*
4	Simbolo categoria velocità - *Category Speed Symbol*
5	Indice di carico - *Load Index*
6	Tipo di battistrada - *Tyre Tread Type*
7	Diametro nominale di calettamento (in pollici) - *Nominal Keying Diameter (in inches)*
8	Rapporto altezza/sezione H/S - *Ratio Height/Section H/S*
9	Larghezza nominale di sezione (mm) - *Nominal Section Length (mm)*

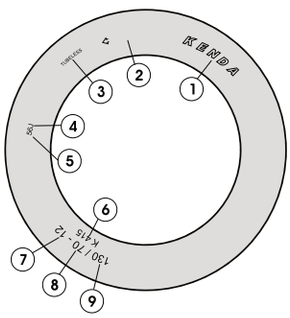

LE "MISURE" DEL PNEUMATICO - *THE "MEASURES" OF THE TYRE*	
D	Diametro esterno - *External Diameter*
H	Altezza di sezione - *Section Height*
S	Sezione massima del pneumatico - *Maximum Tyre Section*
Ø	Diametro di calettamento - *Keying Diameter*

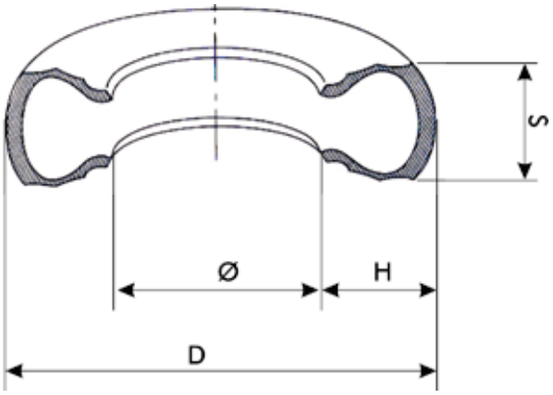

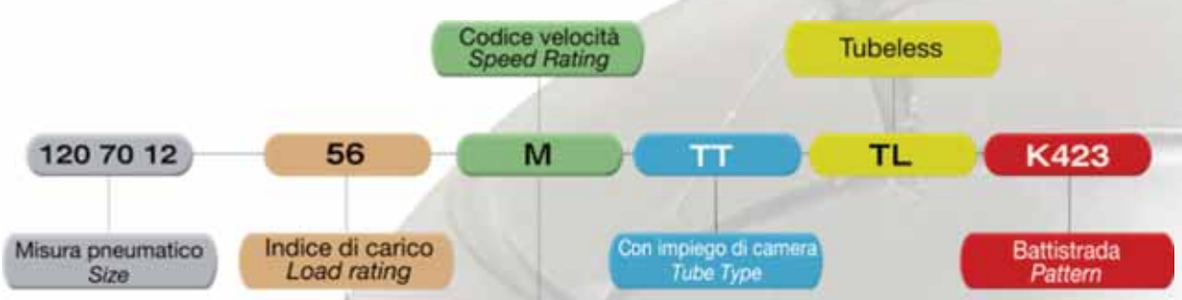

INDICE DI CARICO - *LOAD INDEX*								
LI	**KG.**	**LBS**	**LI**	**KG.**	**LBS**	**LI**	**KG.**	**LBS**
19	77,5	112,7	47	175	254,4	75	387	562,5
20	80	116,3	48	180	261,6	76	400	581,4
21	82,5	119,9	49	185	268,9	77	412	598,9
22	85	123,6	50	190	276,2	78	425	617,8
23	87,5	127,2	51	195	283,5	79	437	635,2
24	90	130,8	52	200	290,7	80	450	654,1
25	92,5	134,5	53	206	299,4	81	462	671,6
26	95	138,1	54	212	308,2	82	475	690,5
27	97,5	141,7	55	218	316,9	83	487	707,9
28	100	145,4	56	224	325,6	84	500	726,8
29	103	149,7	57	230	334,3	85	515	748,6
30	106	154,1	58	236	343	86	530	770,4
31	109	158,4	59	243	353,2	87	545	792,2
32	112	162,8	60	250	363,4	88	560	814
33	115	167,2	61	257	373,6	89	580	843,1
34	118	171,5	62	265	385,2	90	600	872,2
35	121	175,9	63	272	395,4	91	615	894
36	125	181,7	64	280	407	92	630	915,8
37	128	186,1	65	290	421,5	93	650	944,8
38	132	191,9	66	300	436,1	94	670	973,9
39	136	197,7	67	307	446,3	95	690	1003
40	140	203,5	68	315	457,9	96	710	1032,1
41	145	210,8	69	325	472,4	97	730	1061,1
42	150	218	70	335	487	98	750	1090,2
43	155	225,3	71	345	501,5	99	775	1126,5
44	160	232,6	72	355	516	100	800	1162,9
45	165	239,8	73	365	530,6			
46	170	247,1	74	375	545,1			

CODICE DI VELOCITA' - *SPEED SYMBOL*	
CODICE - *SYMBOL*	**VELOCITA' - *SPEED* (KM/H)**
B	50
C	60
D	65
E	70
F	80
G	90
J	100
K	110
L	120
M	130
N	140
P	150
Q	160
R	170
S	180
T	190
H	210
V	240
W	270



10"



	Codice RMS *RMS Code*		Misura *Size*	Battistrada *Tread*	Pattern	Indice di Carico *Load Index*	Indice di velocità *Speed Index*	Coperture *Tyres*	Codice a barre *Barcode*
	991100011		3.00-10	Mich 83	K333	50	J	TT	
	991100015		3.00-10	Fascia Bianca | *White Wall*	K333	50	J	TL	
❄	**991100102**		3.00-10	Mich M+S	K701	47	L	TL	
❄	**991200102**		3.50-10	Mich M+S	K701	56	L	TL	
	991200001		3.50-10	Mich 83	K333	51	J	TT	
	991200003		3.50-10	Fascia Bianca | *White Wall*	K333	51	J	TL	
	991605002		90/90-10	Bopp	K413	50	J	TL	
	991607002		90/90-10	Dext	K415	50	J	TL	
	991705002		100/80-10	Bopp	K413	52	J	TL	
	991705003		100/80-10	Bopp	K413	53	M	TL	
	991709003		100/80-10	Unik	K423	53	M	TL	
	991807002		100/90-10	Dext	K415	56	J	TL	
	991889003		120/70-10	Unik	K423	54	M	TL	
	991901003		120/90-10	Road	K346	57	J	TL	
	991905003		120/90-10	Bopp	K413	57	M	TL	
	991906003		120/90-10	Chocolate	K451	57	J	TL	
	991908002		120/90-10	Reggae	K761	56	J	TL	
	992075002		130/70-10	Bopp	K413	52	J	TL	
	992001002		130/90-10	Road	K346	61	J	TL	
	992005002		130/90-10	Bopp	K413	61	J	TL	
	992005003		130/90-10	Bopp	K413	61	M	TL	
	992006002		130/90-10	Chocolate	K451	61	J	TL	
	992007002		130/90-10	Dext	K415	61	J	TL	
	992008002		130/90-10	Reggae	K761	61	J	TL	
	995008002		150/80-10	Reggae	K761	65	L	TL	

TL = Tubeless - TT = Set copertura + camera *(Kit tyre and inner tube)*



11"



	Codice RMS *RMS Code*		Misura *Size*	Battistrada *Tread*	Pattern	Indice di Carico *Load Index*	Indice di velocità *Speed Index*	Coperture *Tyres*	Codice a barre *Barcode*
	995549002		110/70-11	Unik	K423	45	L	TL	
	995549003		110/70-11	-	K415 M+S	45	M	TL	
❄	**995549004**		110/70-11	Mich M+S	K701	45	M	TL	
	995645003		120/70-11	Unik	K423	56	L	TL	
❄	**995645004**		120/70-11	-	K415 M+S	56	L	TL	
❄	**995645005**		120/70-11	Mich M+S	K701	56	L	TL	

TL=Tubeless

12"



	Codice RMS *RMS Code*		Misura *Size*	Battistrada *Tread*	Pattern	Indice di Carico *Load Index*	Indice di velocità *Speed Index*	Coperture *Tyres*	Codice a barre *Barcode*
	991431002		100/60-12	Mach 2	K433F	39	J	TL	
	991835003		110/70-12	Bopp	K413	56	M	TL	
	991865002		110/90-12	Bopp	K413	64	J	TL	
	991961104		120/70-12	Drago F	K763F	51	P	TL	
❄	**991961105**		120/70-12	Mich M+S	K701	58	P	TL	
	991965002		120/70-12	Bopp	K413	51	J	TL	
	991965003		120/70-12	Bopp	K413	51	M	TL	
	991967002		120/70-12	Dext	K415	51	J	TL	
	991968002		120/70-12	Reggae	K761	51	J	TL	
	991988002		120/80-12	Reggae	K761	65	J	TL	
	992061104		130/70-12	Drago	K763	62	P	TL	
❄	**992061105**		130/70-12	Mich M+S	K701	62	P	TL	
	992065002		130/70-12	Bopp	K413	56	J	TL	
	992065003		130/70-12	Bopp	K413	62	M	TL	
	992067002		130/70-12	Dext	K415	56	J	TL	
	992028002		130/80-12	Reggae	K761	69	J	TL	
	992115002		140/70-12	Bopp	K413	60	J	TL	
	992115003		140/70-12	Bopp	K413	60	M	TL	

TL=Tubeless

13"



Codice RMS *RMS Code*		Misura *Size*	Battistrada *Tread*	Pattern	Indice di Carico *Load Index*	Indice di velocità *Speed Index*	Coperture *Tyres*	Codice a barre *Barcode*
991871104		110/90-13	Drago F	K763F	56	P	TL	
991975003		120/70-13	Bopp	K413	53	M	TL	
991975004		130/70-13	-	K703 F	53	P	TL	
992055002		130/60-13	Bopp	K413	53	J	TL	
992055003		130/60-13	Bopp	K413	53	M	TL	
992058002		130/60-13	Reggae	K761	53	J	TL	
992081103		130/70-13	Drago	K763	57	M	TL	
992081104		130/70-13	Drago	K763	63	P	TL	
992081105		130/70-13	-	K703	57	P	TL	
992125002		140/60-13	Bopp	K413	57	J	TL	
992125003		140/60-13	Bopp	K413	57	M	TL	
992128002		140/60-13	Reggae	K761	57	J	TL	
992151305		150/70-13	Mach P	K434	64	S	TL	

TL=Tubeless



14"



Codice RMS *RMS Code*		Misura *Size*	Battistrada *Tread*	Pattern	Indice di Carico *Load Index*	Indice di velocità *Speed Index*	Coperture *Tyres*	Codice a barre *Barcode*
993461300		100/90-14	Mach P	K434	51	P	TL	
991850002		110/80-14	Classic	K425	59	J	TL	
994641205		120/70-14	Drake F	K764F	55	S	TL	
994641305		120/70-14	Mach 2	K433F	55	S	TL	
994651100		120/80-14	Drago	K763	58	P	TL	
994831205		140/60-14	Drake	K764	64	S	TL	
994841205		140/70-14	Drake	K764	68	S	TL	
994841305		120/80-14	Mach 2	K433F	58	S	TL	
995041305		150/70-14	Mach P	K434	66	S	TL	

15"



Codice RMS *RMS Code*		Misura *Size*	Battistrada *Tread*	Pattern	Indice di Carico *Load Index*	Indice di velocità *Speed Index*	Coperture *Tyres*	Codice a barre *Barcode*
991981002		120/70-15	Mach 2	K433F	56	S	TL	
991991002		130/80-15	Road	K346	63	P	TL	

TL=Tubeless

16"



	Codice RMS *RMS Code*		Misura *Size*	Battistrada *Tread*	Pattern	Indice di Carico *Load Index*	Indice di velocità *Speed Index*	Coperture *Tyres*	Codice a barre *Barcode*
	991450002		70/90-16	Classic	K425	42	J	TL	
	993100001		2½ 16	Mich	K77	31	B	TT	
	993101001		2.50-16	Slick	K327	36	J	TT	
	993101002		2.50-16	Slick	K327	42	J	TL	
	993201001		2¾ 16	Slick	K327	36	J	TT	
	993301001		2¾ 16	Slick	K327	40	J	TT	
	993301002		2¾ 16	Slick	K327	46	J	TL	
	991500002		80/80-16	Classic	K425	46	J	TL	
	991500004		80/80-16	Classic	K425	46	P	TL	
	993361300		90/90-16	Mac P	K434	48	P	TL	
	991550002		90/80-16	Classic	K425	52	J	TL	
	991570004		100/80-16	Classic	K425	56	P	TL	
	991571104		100/80-16	Drago F	K763F	56	P	TL	
	993451104		100/80-16	Drago	K763	50	P	TL	
❄	**993451105**		100/80-16	Mich M+S	K701	50	P	TL	
	993542004		110/70-16	Mac F	K671F	52	P	TL	
	993651004		120/80-16	-	K428	60	P	TL	
	993651104		120/80-16	Drago	K763	60	P	TL	
❄	**993651105**		120/80-16	Mich M+S	K701	60	P	TL	
	993652004		120/80-16	Comand P	K430	60	P	TL	

TL = Tubeless - TT = Set copertura + camera *(Kit tyre and inner tube)*

16"

	Codice RMS *RMS Code*		Misura *Size*	Battistrada *Tread*	Pattern	Indice di Carico *Load Index*	Indice di velocità *Speed Index*	Coperture *Tyres*	Codice a barre *Barcode*
	991582005		130/70-16	Mac P	K671	61	S	TL	
	991591104		130/80-16	Drago	K763	64	P	TL	
	993842004		140/70-16	Mac P	K671	65	P	TL	

17"





Codice RMS *RMS Code*		Misura *Size*	Battistrada *Tread*	Pattern	Indice di Carico *Load Index*	Indice di velocità *Speed Index*	Coperture *Tyres*	Codice a barre *Barcode*
993400001		2.00	Mich	K77	Non omologata | *Not homologated*	Non omologata | *Not homologated*	TT	
993400101		2.50	Off Road	K772A	Non omologata | *Not homologated*	Non omologata | *Not homologated*	TL	

18"



Codice RMS *RMS Code*		Misura *Size*	Battistrada *Tread*	Pattern	Indice di Carico *Load Index*	Indice di velocità *Speed Index*	Coperture *Tyres*	Codice a barre *Barcode*
995745005	NEW	140/80-18	Off Road	K779 EXTREME	70	R	TT	
995745006	NEW	140/80-18	Off Road	K779 GAUNTLET	70	R	TT	



21"



Codice RMS *RMS Code*		Misura *Size*	Battistrada *Tread*	Pattern	Indice di Carico *Load Index*	Indice di velocità *Speed Index*	Coperture *Tyres*	Codice a barre *Barcode*
995745004	NEW	90/90-21	Off Road	K777	54	R	TT	

TRASPORTO



Codice RMS *RMS Code*		Misura *Size*	Battistrada *Tread*	Pattern	Indice di Carico *Load Index*	Indice di velocità *Speed Index*	Coperture *Tyres*	Codice a barre *Barcode*
991300002		4.50-10	Trasporto	K355	76	M	TT	

TL = Tubeless - TT = Set copertura + camera *(Kit tyre and inner tube)*



10"





	Codice RMS *RMS Code*		Misura *Size*	Battistrada *Tread*	Pattern	N° Tele	Indice di Carico *Load Index*	Indice di velocità *Speed Index*	Coperture *Tyres*	VALVOLE *VALVES*	Codice a barre *Barcode*
DURO	**991103001**		3.00-10	Rock	HF204A	4	Non omologata *I Not homologated*	Non omologata *I Not homologated*	TT	TR87	
DURO	**991203001**		3.50-10	Rock	HF204	4	Non omologata *I Not homologated*	Non omologata *I Not homologated*	TT	TR87	

14"



	Codice RMS *RMS Code*		Misura *Size*	Battistrada *Tread*	Pattern	N° Tele	Indice di Carico *Load Index*	Indice di velocità *Speed Index*	Coperture *Tyres*	VALVOLE *VALVES*	Codice a barre *Barcode*
DURO	**992102001**		80/80-14	Slick	HF346	-	43	J	TT	-	

16"



	Codice RMS *RMS Code*		Misura *Size*	Battistrada *Tread*	Pattern	N° Tele	Indice di Carico *Load Index*	Indice di velocità *Speed Index*	Coperture *Tyres*	VALVOLE *VALVES*	Codice a barre *Barcode*
DURO	**993101003**		2.50-16	Rock	HF311	4	36	L	TL	-	

TL = Tubeless - TT = Set copertura + camera *(Kit tyre and inner tube)*



CARRIOLA



	Codice RMS *RMS Code*		Misura *Size*	Battistrada *Tread*	Pattern	N° Tele	Indice di Carico *Load Index*	Indice di velocità *Speed Index*	Coperture *Tyres*	VALVOLE *VALVES*	Codice a barre *Barcode*
DURO	**991002101**		3.50-8	Carriola | *Wheelbarrow*	HF207	-	-	-	TT	TR13	

TRASPORTO



	Codice RMS *RMS Code*		Misura *Size*	Battistrada *Tread*	Pattern	N° Tele	Indice di Carico *Load Index*	Indice di velocità *Speed Index*	Coperture *Tyres*	VALVOLE *VALVES*	Codice a barre *Barcode*
DURO	**991300020**		4.50-10	Trasporto | *Transportation*	HF267	6	76	M	-	-	
DURO	**991290020**		4.00-12	Trasporto | *Transportation*	HF267	-	Non omologata | *Not homologated*	Non omologata | *Not homologated*	-	-	

TL = Tubeless - TT = Set copertura + camera *(Kit tyre and inner tube)*



TR13	TR4	TR6	TR87
Valvola standard rivestita in gomma *Rubber covered straight valve* L: 35 mm Ø foro valvola: 11,5 mm *Ø Valve hole: 11,5 mm*	Valvola standard con base in gomma *Straight valve with rubber base* L: 33 mm Ø foro valvola: 7,5 mm *Ø Valve hole: 7,5 mm*	Valvola standard con base in gomma *Straight valve with rubber base* L: 33 mm Ø foro valvola: 8,3 mm *Ø Valve hole: 8,3 mm*	Valvola a gomito con base in gomma *90° valve with rubber base* A: 17 mm - B: 33 mm 90° Ø foro valvola: 10,2 mm *Ø Valve hole: 10,2 mm*
			

Codice RMS *RMS Code*	Misura *Size*	Valvola *Valve*	Note *Notes*	Codice a barre *Barcode*
999100000	3.50-8	TR 13	Valvola vulcanizzata	
999100100	3.50-8	TR 87	Valvola vulcanizzata	
999200001	3.00/3.50-10	TR 87	Valvola vulcanizzata	
999250001	100/110/90-10	TR 87	Valvola vulcanizzata	
999300001	120/130/90-10	TR 87	Valvola vulcanizzata	
999320001	120/130/70-12	TR 87	Valvola vulcanizzata	
999330001	130/60-13	TR 87	Valvola vulcanizzata	
999400001	4.50-10	TR 13	Valvola vulcanizzata	
999420001	4.50-12	TR 13	Valvola vulcanizzata	
999500001	2.75/3.00-14	TR 6	Valvola vulcanizzata munita di rondella bloccaggio	
999600001	2.25/2.50-16	TR 6	Valvola vulcanizzata munita di rondella bloccaggio	
999700001	2.75-16	TR 4	Valvola vulcanizzata munita di rondella bloccaggio	
999900001	2.00/2.25-17	TR 4	Valvola vulcanizzata munita di rondella bloccaggio	
999900101	2.25/2.50-17	TR 4	Valvola vulcanizzata munita di rondella bloccaggio	
999910201	2.75/3.00-18	TR 4	Valvola vulcanizzata munita di rondella bloccaggio	
999900201	2.50/2.75-17	TR 4	Valvola vulcanizzata munita di rondella bloccaggio	
999900211	3.00/3.25-17	TR 4	Valvola vulcanizzata munita di rondella bloccaggio	
999900221	3.75/4.25-17	TR 6	Valvola vulcanizzata munita di rondella bloccaggio	
999900231	4.50/5.10-17	TR 6	Valvola vulcanizzata munita di rondella bloccaggio	
999900241	3.50/4.00-18	TR 6	Valvola vulcanizzata munita di rondella bloccaggio	
999900251	3.25/3.50-19	TR 4	Valvola vulcanizzata munita di rondella bloccaggio	
999900261	100/90-19	TR 6	Valvola vulcanizzata munita di rondella bloccaggio	
999900271	3.00/3.25-21	TR 4	Valvola vulcanizzata munita di rondella bloccaggio	
999900281	90/90-21	TR 6	Valvola vulcanizzata munita di rondella bloccaggio	



	Codice RMS *RMS Code*	Diametro *Diameter*	Larghezza *Width*	Codice a barre *Barcode*
	**999900300**	17"	25 mm	
	999900310	17"	45 mm	
	999900320	18"	23 mm	
	999900330	18"	28 mm	
	999900340	19"	32 mm	
	999900350	21"	22 mm	
	999900360	21"	28 mm	

VALVOLE TUBELESS - *TUBELESS VALVE*

999999020

TR412
Valvola standard rivestita in gomma | *Rubber covered straight valve*
L: 25 mm



999999000

TR413
Valvola standard rivestita in gomma | *Rubber covered straight valve*
L: 35 mm



999999010

PVRT70
Valvola a gomito con base in gomma | *90° valve with rubber base*
A: 17 mm
B: 33 mm
90°
Ø foro valvola 10,2 mm | *Ø Valve hole 10,2 mm*

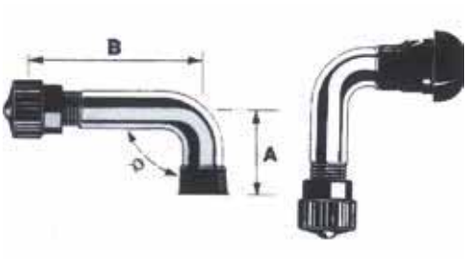

ACCESSORI
ACCESSORIES
ACCESORIOS
ACCESSOIRES



Kits Entretien Scooter
Serrures et Chaînes
Porte-bagage
Filets de Fret
Béquilles de Stand
Accessoires Béquilles de Stand
Sangles de Transport
Housses Moto
Kit de Transformation LED
Kits Réparation Pneus
Kit de Premiers Secours



Kits Revision Scooter
Cadenas y Candados
Portaequipajes
Redes de Carga
Caballetes de Competicion
Accesorios Caballetes de Competicion
Eslingas para Transporte
Fundas Moto
Kit de Conversion LED
Kit Repara Nuematicos
Kit de Primeros Auxilios



Service Kits For Scooter
Locks and Chains
Carriers
Cargo Nets
Paddock Stands
Paddock Stands Accessories
Tie Down
Motorcycle Covers
LED Conversion Kits
Repair Kits for Tires
First Aid Kit



KIT TAGLIANDO SCOOTER	**1496**
LUCCHETTI E CATENE	**1499**
PORTAPACCHI	**1508**
RETI ELASTICHE	**1509**
CAVALLETTI REGGIMOTO	**1510**
ACCESSORI CAVALLETTI REGGIMOTO	**1511**
CINGHIE TRASPORTO	**1512**
TELI COPRI MOTO	**1513**
KIT CONVERSIONE A LED	**1514**
KIT RIPARAZIONE PNEUMATICI	**1515**
KIT PRIMO SOCCORSO	**1521**

KIT TAGLIANDO SCOOTER

SERVICE KITS FOR SCOOTER



CODICE KIT TAGLIANDO *SERVICE KIT CODE*		CODICE A BARRE *BARCODE*	PASTIGLIE - GANASCIA *BRAKE PADS - BRAKE SHOE*		FILTRO ARIA *AIR FILTER*	FILTRO OLIO *OIL FILTER*	CANDELA *SPARK PLUG*	CINGHIA *BELT*	RULLINI *ROLLERS*
			ANT - *FRONT*	**POST** - *REAR*					
APRILIA: Scarabeo 50 4T 06-09 • Scarabeo 4T 4V Net 09 • Scarabeo Restyling Euro3 06-09 • Scarabeo Quattro 09									
163820090			225100190	225120560	100602101 (AP8202249) Aspirazione - *Intake* 100601181 (832972) Carter - *Carter*	-	246210220	163750069 (480852)	100450532 19x15,5 mm - 5,3 gr
HONDA: Integra 700 11-13									
163820260	NEW		225102543	225100930	100602901 (17210-MGS-D30)	100609355 (15410-MFJ-D01)	246215613	-	-
HONDA: Integra 750 14-17									
163820270	NEW		225102643	225103520	100602901 (17210-MGS-D30)	100609355 (15410-MFJ-D01)	246215613	-	-
HONDA: PCX 125 09-11									
163820230	NEW		225102780	225120471	100602661 (17210-KWN-900)	-	246215018	163756082 (23100-KWN-901)	100400460 20x15 mm - 16,5 gr
HONDA: PCX 125 12-14									
163820240	NEW		225102780	225120471	100602771 (17210-KZR-600)	-	246215018	163756092 (23100-KZR-601)	100400460 20x15 mm - 16,5 gr
HONDA: SH 125 >09									
163820060			225102540	225102560	100601132 (17210-KGF-900)	-	246210500	163750479 (23100-KGF-901)	100400430 20x15 mm - 11,5 gr
HONDA: SH 125 02-08									
163820050			225100270	225120471	100601132 (17210-KGF-900)	-	246210500	163750479 (23100-KGF-901)	100400430 20x15 mm - 11,5 gr
HONDA: SH 150 01-08									
163820080			225100270	225120471	100601132 (17210-KGF-900)	-	246210500	163750739 (23100-KGG-911)	100400440 20x15 mm - 12,5 gr
HONDA: SH 150 i									
163820070			225102540	225102560	100601132 (17210-KGF-900)	-	246210500	163750739 (23100-KGG-911)	100400440 20x15 mm - 12,5 gr
HONDA: SH 300 • SH 300 ABS 06-15									
163820250	NEW		225102543	225102560	100602381 (17210-KTW-900) Aspirazione - *Intake* 100603071 (19412-KTW-900) Variatore - *Pulley*	100609355 (15410-MFJ-D01)	246215057	163756162 (23100-KTW-901)	100400530 23x18 mm - 19 gr
KYMCO: 50 4T 10"									
163820180			225100580	225120091	100602401 (0163126)	-	246210400	163750210 (00107006)	100420650 16x13 mm - 6,5 gr
KYMCO: 50 4T 12"									
163820170			225100580	225120091	100602391 (0164044)	-	246210400	163750330 (00107541)	100420650 16x13 mm - 6,5 gr
KYMCO: Agility 125 R16									
163820040			225102710	225101200	100602311 (0162377)	-	246210400	163750441 (00127541)	100400090 18x14 mm - 13 gr
KYMCO: Downtown 300									
163820280	NEW		225100873	225102760	100602591 (00117245)	100609485 (00115058)	246215049	163756722 (0123257)	100400410 20x12 mm - 15,3 gr

CODICE KIT TAGLIANDO *SERVICE KIT CODE*		**CODICE A BARRE** *BARCODE*	**PASTIGLIE - GANASCIA** *BRAKE PADS - BRAKE SHOE*		**FILTRO ARIA** *AIR FILTER*	**FILTRO OLIO** *OIL FILTER*	**CANDELA** *SPARK PLUG*	**CINGHIA** *BELT*	**RULLINI** *ROLLERS*
			ANT - *FRONT*	**POST** - *REAR*					
KYMCO: People GTI 300									
163820290	NEW		225102673	225102760	100602671 (00117303)	100609485 (00115058)	246215049	163756722 (0123257)	100400410 20x12 mm - 15,3 gr
MBK: Booster 50									
163820140			225100190	225120060	100600311 (3VLE44510100)	-	246210200	163750089 (5RNE76410000)	100410650 15x12 mm - 6,5 gr
PEUGEOT: TKR 50									
163820160			225100080	225120091	100600371 (730199)	-	246210130	163750169 (729171)	100420900 16x13 mm - 9 gr
PIAGGIO: Beverly 300 ABS 16-18									
163820390	NEW		225102623	225102600	100600991 (829258)	100609041 (82635R)	246215011	163750790 (841851)	100400842 21x17 mm - 13,8 gr
PIAGGIO: Liberty 125 PTT 05-11									
163820020			225100300	225120421	100600911 (487287)	100609045 (86235R)	246210250	163750389 (841213)	100400692 19x17 mm - 8,6 gr
PIAGGIO: MP3 400									
163820030			225100300	225102620	100600991 (829258)	100609075 (82960R)	246210250	163750680 (832738)	100400642 25x17 mm - 18,6 gr
PIAGGIO: Vespa GTS 125 ie 07-12									
163820190			225102620	225100450	100602561 (842093) Variatore - *Pulley* 100602111 (831997) Aspirazione - *Intake*	100609045 (86235R)	246211820	163750389 (841213)	100400252 19x17 mm - 7,3 gr
PIAGGIO: Vespa GTS 300 10-13									
163820120			225102620	225100450	100602561 (842093) Variatore - *Pulley* 100602111 (831997) Aspirazione - *Intake*	100609045 (86235R)	246210500	163750812 (843963)	100400842 21x17 mm - 13,8 gr
PIAGGIO: Vespa LX 125 05-11									
163820100			225100300	225120350	100601161 (843194)	100609045 (86235R)	246210500	163750389 (841213)	100400692 19x17 mm - 8,6 gr
PIAGGIO: Vespa LX 50 4T 05-08									
163820300	NEW		225100300	225120350	100601161 (843194) 100601181 (832972) Secondario - *Secondary*	-	246215048	163756400 (82645R)	100450650 19x15,5 mm - 6,5 gr
PIAGGIO: Vespa Primavera 50 2T 13-17									
163820310	NEW		225102620	225120350	100600921 (487719) 100601191 (486942) Secondario - *Secondary*	-	246215050	163756420 (436864)	100450630 19x15,5 mm - 6,3 gr
PIAGGIO: Zip 50 2T 08-13									
163820130			225100300	225120350	100600921 (487719) Aspirazione - *Intake* 100601191 (486942) Carter - *Carter*	-	246210270	163750050 (478954)	100450752 19x15,5 mm - 7,5 gr
YAMAHA: Aerox 50									
163820150			225100190	225100280	100600061 (3KJ144510000)	-	246210200	163750089 (5RNE76410000)	100410550 15x12 mm - 5,5 gr
YAMAHA: Majesty 125 06-09									
163820110			225100430	225100490	100600871 (5DS154070100) Variatore - *Pulley* 100600791 (5DSE44510000) Aspirazione - *Intake*	-	246210500	163750300 (NSE7641000)	100400370 20x12 mm - 10,5 gr
YAMAHA: T-Max 500 01-03									
163820350	NEW		225100403	225101413	100602201 (4BH144510000) Aspirazione - *Intake* 100602361 (5GJ154070100) Variatore - *Pulley* 100602371 (5GJ154080000) Variatore - *Pulley*	100609085 (5DM134400000)	246215049 2 pz. - *2 pcs*	163756372 (5GJ176410000)	100400922 25x15 mm - 20 gr
YAMAHA: T-Max 500 04-07									
163820360	NEW		225100413 2 pz. - *2 pcs*	225100803	100602201 (4BH144510000) Aspirazione - *Intake* 100602361 (5GJ154070100) Variatore - *Pulley* 100602371 (5GJ154080000) Variatore - *Pulley*	100609085 (5DM134400000)	246215049 2 pz. - *2 pcs*	163756382 (5VU176410000)	100400832 25x15 mm - 18 gr

CODICE KIT TAGLIANDO *SERVICE KIT CODE*		**CODICE A BARRE** *BARCODE*	**PASTIGLIE - GANASCIA** *BRAKE PADS - BRAKE SHOE*		**FILTRO ARIA** *AIR FILTER*	**FILTRO OLIO** *OIL FILTER*	**CANDELA** *SPARK PLUG*	**CINGHIA** *BELT*	**RULLINI** *ROLLERS*
			ANT - *FRONT*	**POST** - *REAR*					
YAMAHA: T-Max 500 08-12									
163820370	NEW		225101063 2 pz. - *2 pcs*	225100803	100602441 (4B5144510000) Aspirazione - *Intake* 100602491 (4B5154070000) Cinghia - *Belt* 100602371 (5GJ154080000) Variatore - *Pulley*	100609085 (5DM134400000)	246215049 2 pz. - *2 pcs*	163756382 (5VU176410000)	100400832 25x15 mm - 18 gr
YAMAHA: T-Max 530 12-16									
163820380	NEW		225101063 2 pz. - *2 pcs*	225101413	100602441 (4B5144510000) Aspirazione - *Intake* 100602711 (59C154080000) Cinghia - *Belt* 100602881 (59C15407000) Carter - *Carter*	100609085 (5DM134400000)	246215049 2 pz. - *2 pcs*	163756392 (59C176410000)	100400832 25x15 mm - 18 gr
YAMAHA: X-Max 125 06-09									
163820010			225100770	225100490	100602411 (1B9144510000)	100609385 (38BE34400000)	246210500	163750800 (B9E7641000)	100400370 20x12 mm - 10,5 gr
YAMAHA: X-Max 250 07-09									
163820320	NEW		225100773	225102660	100602411 (1B9144510000) Aspirazione - *Intake* 100602421 (5GM154070000) Variatore - *Pulley*	-	246215002	163756322 (5SEE76410200)	100400770 20x12 mm - 12 gr
YAMAHA: X-Max 250 10-13									
163820330	NEW		225102643	225102660	100602411 (1B9144510000) Aspirazione - *Intake* 100602421 (5GM154070000) Variatore - *Pulley*	-	246215002	163756322 (5SEE76410200)	100400770 20x12 mm - 12 gr
YAMAHA: X-Max 400 13-16									
163820340	NEW		225102643 2 pz. - *2 pcs*	225102740	100602351 (5RU1540702)	100609055 (5RU134400000)	246215049	163756362 (1SDE76410000)	100400862 25x15 mm - 17 gr

LUMA, azienda con sede in Spagna, è riconosciuta come la 'specialista Europea' per la sicurezza nel settore delle due Ruote (Moto/Scooter). Gli antifurti presenti nel catalogo, come lucchetti ad arco, catene e blocca dischi, si adattano alle differenti esigenze di chi ricerca prevenzione e protezione contro il furto.

Con un design innovativo e moderno, i diversi prodotti sono frutto di collaborazioni con prestigiosi studi di design Internazionali, seguendo le nuove tendenze di stile senza trascurare la componente ergonomica, indispensabile per un utilizzo e un trasporto facile e sicuro.

Nella produzione vengono utilizzati materiali di ultima generazione e di alta qualità. Tutti i progetti vengono sviluppati in collaborazione con i più famosi Istituti di ricerca e superano le prove dei più esigenti centri di Omologazione Europea.

***LUMA**, a company based in Spain, is recognized as the 'European specialist' for safety in the two-wheelers sector (Motorbike/Scooter). The anti-theft devices in the catalogue, such as arched padlocks, chains and disc locks, are useful for the different needs of those seeking prevention and protection against theft.*

With an innovative and modern design, the different products are the result of coperation with famous international design studios, following the new style trends without neglecting the ergonomic component, essential for an easy and safe use and transport.

The latest generation of high quality materials are used in production. All projects are developed in cooperation with the most famous research institutes and have passed the tests of the most demanding European Approval centers.

CARATTERISTICHE



Corpo in acciaio temprato



Perno in acciaio temprato



Catena in acciaio temprato



Copertura anti-umidità



Arco di acciaio temprato



Grado di sicurezza

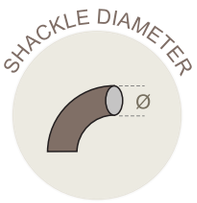

Diametro Tubo



Diametro catena



Lunghezza catena

OMOLOGAZIONI

ART
Omologazione Olanda

SVENSK BRAND & SÄKERHETSCERTIFIERING
Omologazione Svezia

CLASSE S.R.A.
Omologazione Francia

SOLD SECURE
MOTOR SCOOTER SILVER
Omologazione Gran Bretagna

SOLIDO HHR

CLASSE S.R.A.

9

Ø 18 mm



HARDENED STEEL SHACKLE

PLASTIC COVER

HARDENED STEEL BODY

288030000

CODICE LUMA: HOAU100S
Adatto per sottosella | *Suitable for underseat*

HONDA: Foresight, Cbr 600F, Cb 900, Hornet, Vtr 1000F, XL 1000V

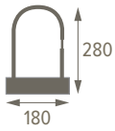

288030010

CODICE LUMA: HOAU110S
Adatto per sottosella | *Suitable for underseat*

HONDA: Vtr 1000 Sp-2, Cbr 600 Rr, Cbr 1000 Rr

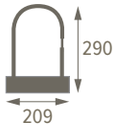

288030020

CODICE LUMA: HOAU115S

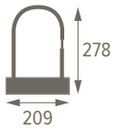

SOLIDO U

CLASSE S.R.A.

9

Ø 18 mm



HARDENED STEEL SHACKLE

HARDENED STEEL BODY

288030070

CODICE LUMA: HOA85250LUM

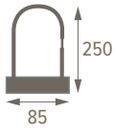

288030080

CODICE LUMA: HOA85310LUM

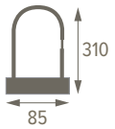

288030130

CODICE LUMA: HOA115LUM

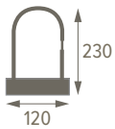

ESCUDO 55 HU

CLASSE S.R.A.

7.5

Ø 16 mm



HARDENED STEEL SHACKLE

PLASTIC COVER

HARDENED STEEL BODY

288030150

CODICE LUMA: HOA55245W

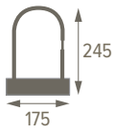

288030160

CODICE LUMA: HOA55320W

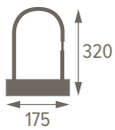

ESCUDO CHAIN PLUS

CLASSE S.R.A. | ART | 10 | Ø 16 mm | Ø 15 mm | cm



HARDENED STEEL CHAIN | PLASTIC COVER OPEN | HARDENED STEEL BODY

288030310

CODICE LUMA: KDA38181590
Lunghezza: 90 cm | *Lenght: 90 cm*

288030340

CODICE LUMA: KDA381815170
Lunghezza: 170 cm | *Lenght: 170 cm*

ESCUDO 38 CHAIN

ART | SOLD SECURE | 8 | Ø 12 mm | Ø 15 mm | cm



HARDENED STEEL CHAIN | PLASTIC COVER OPEN | HARDENED STEEL BODY

288030491

CODICE LUMA: KDA3812W
Lunghezza: 120 cm | *Lenght: 120 cm*

288030501

CODICE LUMA: KDA3817W
Lunghezza: 170 cm | *Lenght: 170 cm*

ESCUDO DELTA 10

7.5 | Ø 12 mm | Ø 10 mm | cm



HARDENED STEEL CHAIN | HARDENED STEEL BODY

288030510

CODICE LUMA: KDM1012DEL
Lunghezza: 120 cm | *Lenght: 120 cm*

288030520

CODICE LUMA: KDM1015DEL
Lunghezza: 150 cm | *Lenght: 150 cm*

288030530

CODICE LUMA: KDM1020DEL
Lunghezza: 200 cm | *Lenght: 200 cm*

ESCUDO PROCOMBI



288030540

CODICE LUMA: KDM115LPROB
Lunghezza: 115 cm | *Lenght: 115 cm*

ENDURO 48 CHAIN



288030580

CODICE LUMA: KDM4815B
Lunghezza: 140 cm | *Lenght: 140 cm*

288030590

CODICE LUMA: KDM4817B
Lunghezza: 170 cm | *Lenght: 170 cm*

ENDURO 7337

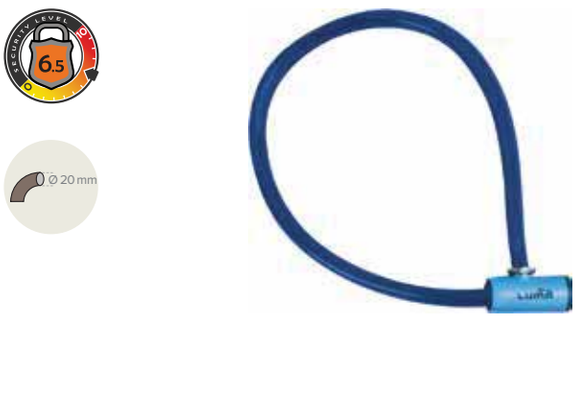

288030201

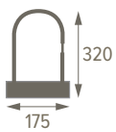

CODICE LUMA: KBB3720100B
Lunghezza: 100 cm | *Lenght: 100 cm*

SOLIDO ANCHOR EVOLUTION



288030790

CODICE LUMA: AFA300

SOLIDO ANCHOR 2



288030800

CODICE LUMA: AFA200P

SOLIDO ANCHOR 300



288030810

CODICE LUMA: AFA101S

SOLIDO D 1016



288030230

CODICE LUMA: DIA1016

ENDURO 75 D



HARDENED STEEL PIN LOCK
HARDENED STEEL BODY

288030250

CODICE LUMA: DIB7501W

ESCUDO PROCOMBI



HARDENED STEEL SHACKLE
PLASTIC COVER
OPEN
HARDENED STEEL BODY

288030281

CODICE LUMA: HOAPROB

142

ENDURO 91 D



HARDENED STEEL PIN LOCK

288030260

CODICE LUMA: DIM91DB

ENDURO 92 D



HARDENED STEEL PIN LOCK

288030270

CODICE LUMA: DIM92DB

28 CHAIN



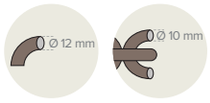









288031510 NEW

CODICE LUMA: KDM2812RG
Lunghezza: 120 cm | *Lenght: 120 cm*

288031520 NEW

CODICE LUMA: KDM2815RG
Lunghezza: 150 cm | *Lenght: 150 cm*

288031530 NEW

CODICE LUMA: KDM2817RG
Lunghezza: 170 cm | *Lenght: 170 cm*

28 CHAIN



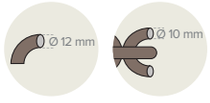









288031511 NEW

CODICE LUMA: KDM2812B
Lunghezza: 120 cm | *Lenght: 120 cm*

288031521 NEW

CODICE LUMA: KDM2815B
Lunghezza: 150 cm | *Lenght: 150 cm*

288031531 NEW

CODICE LUMA: KDM2817B
Lunghezza: 170 cm | *Lenght: 170 cm*

288000091

MAXI DISK LOCK DE-LUXE
- Blocca Disco per freno a disco con perno Ø 10 mm
- Serratura con tappo di protezione
- Colori: rosso e giallo
- Chiave piatta
- Completo di borsetta
- Confezione in blister
- *Disc lock with Ø 10 pin*
- *Lock protection cover*
- *Colours: Red and Yellow*
- *Flat Key*
- *Bag included*
- *Blister packaging*

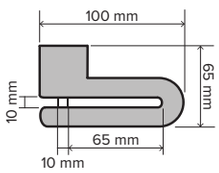



288000101

MINI DISK LOCK DE-LUXE
- Blocca Disco per freno a disco con perno Ø 6 mm
- Serratura con tappo di protezione
- Colori: rosso e giallo
- Chiave piatta
- Completo di borsetta
- Confezione in blister
- *Disc lock with Ø 6 pin*
- *Lock protection cover*
- *Colours: Red and Yellow*
- *Flat Key*
- *Bag included*
- *Blister packaging*

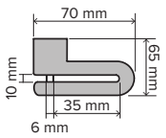



288000130

MICRO DISK LOCK
- Colorato
- Con borsetta
- Blocca Disco per freno a disco con perno Ø 6 mm
- Chiusura in acciaio cromato
- con meccanismo automatico.
- Chiavi tubolari.
- Confezione da 24 pezzi in blister
- *Coloured bag included*
- *Disc lock with Ø 6 mm pin*
- *Automatic chromed steel locking*
- *Tubular keys*
- *24 pcs blister packaging*
- *Senza borsetta*
- *Bag not included*

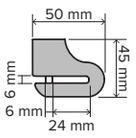



288000120

MICRO DISK LOCK
- Senza borsetta
- *Bag not included*

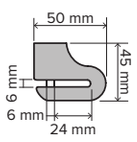



288000640

LUCCHETTO DISC LOCK 70 x 155 mm
- Serratura sistema antiacqua/polvere
- Tre chiavi piatte
- Chiave con luce incorporata

DISC LOCK 70 x 155 mm
- *Waterproof and anti-dust lock*
- *Three flat keys*
- *Integrated mini-bulb*



288000650

DISC LOCK CON ALLARME SONORO
- Blocca Disco per freno a disco con perno Ø 6 mm
- Doppi sensori d'urto e movimento
- Attivazione automatica dell'allarme 30 secondi dopo la chiusura del lucchetto
- Finitura lucida
- Completo di borsetta
- Batterie (Tipo LR44 6 pezzi incluse)

DISC LOCK WITH ALARM
- *Disc lock with Ø 6 mm pin*
- *Double shock and motion sensors*
- *After locking the self-arming system will be set automatically 30 seconds later*
- *Glossy finish*
- *Bag included*
- *Batteries (Type LR44 - 6 pcs included)*

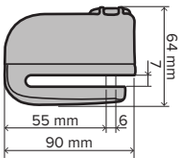



288009000

CAVO SPIRALE 4 x 1500 mm
- Applicabile a tutti i lucchetti al disco
- Colori: rosso / giallo

SECURITY LOOP-CABLE 4 x 1500 mm
- *Suitable for all disc locks*
- *Colours: Red and Yellow*



288000270

CATENA IN ACCIAIO CEMENTATO RICOPERTA IN PVC
- Lunghezza 80 cm
- Ø 4,5 mm

ANTI-THEAFT PVC COATED CHAIN
- *Lenght 80 cm*
- *Ø 4,5 mm*



288000400

NUOVO PITONE MONOBLINDO (Chiave piatta)
- Lunghezza 1200 mm
- Ø 18 mm
- Copertura antiacqua e polvere per la serratura
- Confezione in blister

NEW SECURITY LOCKABLE CHAIN (Flat key)
- *Lenght 1200 mm*
- *Ø 18 mm*
- *Waterproof and anti-dust lock cover*
- *Blister packaging*



288000690

LUCCHETTO PITONE MONOBLINDO
- Lunghezza 1200 mm
- Spessore 22 mm
- Chiave piatta
- Rivestimento in nylon antigraffio
- Testa ricoperta in resina
- Confezione in blister

SECURITY LOCKABLE CHAIN
- *Lenght 1200 mm*
- *Thickness 22 mm*
- *Flat key*
- *Covered with anti-scratch nylon*
- *Resin-covered head lock*
- *Blister packaging*



288000630

LUCCHETTO CATENA 10 x 10 x 1500
- Catena in acciaio temperato a maglia quadra.
- Rivestimento in nylon antigraffio.
- Lucchetto disc lock separabile con serratura sistema antiacqua/polvere
- Tre chiavi piatte
- Una con mini lampadina incorporata.

LOCK AND CHAIN 10 x 10 x 1500
- *Hexagonal chain in hardened-steal*
- *Covered with anti-scratch nylon*
- *Separate disc lock*
- *Waterproof and anti-dust lock*
- *Three flat keys*
- *Integrated mini bulb*



142800000

PORTAPACCO ANTERIORE CROMATO | *CHROMED FRONT CARRIER*

PIAGGIO: Vespa PX
LML
R.O.610271M



142800071

PORTAPACCO ANTERIORE NERO | *BLACK FRONT CARRIER*

PIAGGIO: Vespa PX
LML



142800010

PORTAPACCO POSTERIORE CROMATO | *CHROMED REAR CARRIER*

PIAGGIO: Vespa PX
LML
R.O.610270M



142800001

PORTAPACCO POSTERIORE NERO | *BLACK REAR CARRIER*

PIAGGIO: Vespa PX
LML



142800020

PORTABAULETTO POSTERIORE CROMATO | *CHROMED REAR CARRIER*

PIAGGIO: Vespa PX
LML



142800021

PORTABAULETTO POSTERIORE NERO | *BLACK REAR CARRIER*

PIAGGIO: Vespa PX
LML



142800080

PORTABAULETTO POSTERIORE CROMATO | *CHROMED REAR CARRIER*

PIAGGIO 50-90-125: Vespa Primavera ET3



142800081

PORTABAULETTO POSTERIORE NERO | *BLACK REAR CARRIER*

PIAGGIO 50-90-125: Vespa Primavera ET3





267002040

RETE ELASTICA FISSAGGIO BAGAGLI | *CARGO STRETCH NET*
- Dimensioni 40 x 40 Cm.
- 10 ganci metallici rivestiti in gomma

| *• Dimensions 40 x 40 Cm.*
• 10 coated steel hooks



267002050

RETE ELASTICA FISSAGGIO BAGAGLI | *CARGO STRETCH NET*
- Dimensioni 40 x 80 Cm.
- 10 ganci metallici rivestiti in gomma

| *• Dimensions 40 x 80 Cm.*
• 10 coated steel hooks



267000450

CAVALLETTO REGGIMOTO ANTERIORE | *FRONT STAND*



267000460

CAVALLETTO REGGIMOTO POSTERIORE | *REAR STAND*
Da utilizzare con | *To use with*
- 267000470
- 267000480





267000470

ADATTATORE CAVALLETTO A FORCHETTA | *FORK REAR STAND ADAPTER*
Per Cavalletto posteriore 267000460 | *For 267000460 Rear stand*



267000480

ADATTATORE CAVALLETTO A SLITTA | *FLAT REAR STAND ADAPTER*
Per Cavalletto posteriore 267000460 | *For 267000460 Rear stand*



267000500

SUPPORTI CAVALLETTO UNIVERSALI | *UNIVERSAL STAND SUPPORTS*
Da utilizzare con | *To use with*
- 267000510
- 267000520
- 267000530



267000510

ADATTATORI M6 PER SUPPORTO CAVALLETTO UNIVERSALE | *M6 SUPPORT ADAPTERS*
Da utilizzare con | *To use with*
- 267000500



267000520

ADATTATORI M8 PER SUPPORTO CAVALLETTO UNIVERSALE | *M8 SUPPORT ADAPTERS*
Da utilizzare con | *To use with*
- 267000500



267000530

ADATTATORI M10 PER SUPPORTO CAVALLETTO UNIVERSALE | *M10 SUPPORT ADAPTERS*
Da utilizzare con | *To use with*
- 267000500



142700370

SUPPORTO CAVALLETTO | *STAND SUPPORTS*
mm 8
DUCATI - HONDA - SUZUKI



142700380

SUPPORTO CAVALLETTO | *STAND SUPPORTS*
mm 10
KAWASAKI



142700361

SUPPORTO CAVALLETTO | *STAND SUPPORTS*
mm 6
APRILIA - YAMAHA



142700371

SUPPORTO CAVALLETTO | *STAND SUPPORTS*
mm 8
DUCATI - HONDA - SUZUKI



142700381

SUPPORTO CAVALLETTO | *STAND SUPPORTS*
mm 10
KAWASAKI



267002010

STANDARD DUTY

SET 2 CINGHIE A CRICCHETTO PER TRASPORTO MOTO | *2 RATCHET TIE DOWN*
- Lunghezza 3 Mt.
- Carico d'esercizio 136 Kg.
- Carico Max 408 Kg.

| *• Lenght 3 Mt.*
• Safe work load 136 Kg.
• Break strenght 408 Kg.



267002020

HEAVY DUTY

SET 2 CINGHIE A CRICCHETTO PER TRASPORTO MOTO | *2 RATCHET TIE DOWN*
- Lunghezza 3 Mt.
- Carico d'esercizio 454 Kg.
- Carico Max 1363 Kg.

| *• Lenght 3 Mt.*
• Safe work load 454 Kg.
• Break strenght 1363 Kg.





267002110

TAGLIA M 203x89x119 cm | *SIZE M 203x89x119 cm*
TELO COPRI MOTO
- Materiale: PEVA+PP
- Per esterni: impermeabile e resistente UV
- Cuciture termosaldate
- Anello antifurto
- Cinghia chiusura sottomoto

MOTORCYCLE COVER
- *Material: PEVA+PP*
- *Outdoor use: water and UV resistant*
- *Termoweld stitch*
- *Lock hole*
- *Under motorbike strap*

267002120

TAGLIA L 228x99x124 cm | *SIZE L 228x99x124 cm*
TELO COPRI MOTO
- Materiale: PEVA+PP
- Per esterni: impermeabile e resistente UV
- Cuciture termosaldate
- Anello antifurto
- Cinghia chiusura sottomoto

MOTORCYCLE COVER
- *Material: PEVA+PP*
- *Outdoor use: water and UV resistant*
- *Termoweld stitch*
- *Lock hole*
- *Under motorbike strap*

267002130

TAGLIA XL 246x104x127 cm | *SIZE XL 246x104x127 cm*
TELO COPRI MOTO
- Materiale: PEVA+PP
- Per esterni: impermeabile e resistente UV
- Cuciture termosaldate
- Anello antifurto
- Cinghia chiusura sottomoto

MOTORCYCLE COVER
- *Material: PEVA+PP*
- *Outdoor use: water and UV resistant*
- *Termoweld stitch*
- *Lock hole*
- *Under motorbike strap*

267002140

TAGLIA XXL 264x104x127 cm | *SIZE XXL 264x104x127 cm*
TELO COPRI MOTO
- Materiale: PEVA+PP
- Per esterni: impermeabile e resistente UV
- Cuciture termosaldate
- Anello antifurto
- Cinghia chiusura sottomoto

MOTORCYCLE COVER
- *Material: PEVA+PP*
- *Outdoor use: water and UV resistant*
- *Termoweld stitch*
- *Lock hole*
- *Under motorbike strap*



267002140 su BMW R1200RT con valigie e bauletto | *267002140 on BMW R1200RT with side bag and top case*



KIT CONVERSIONE A LED

LED CONVERSION KITS

246510685

LAMPADA LED H4 ANABBAGLIANTI-ABBAGLIANTI | *H4 LED BULB HIGH AND LOW BEAM*
40/20W
6000 K



246510695

LAMPADA LED H7 | *H7 LED BULB*
40W
6000 K



246510715

LAMPADA LED H1 | *H1 LED BULB*
30W
Giallo = 3000 K | *Yellow = 3000 K*
Bianco = 6000 K | *White = 6000 K*
Blu = 7000 K | *Blue = 7000 K*



246510725

LAMPADA LED H3 | *H3 LED BULB*
30W
Giallo = 3000 K | *Yellow = 3000 K*
Bianco = 6000 K | *White = 6000 K*
Blu = 7000 K | *Blue = 7000 K*



246510735

LAMPADA LED HB3 | *HB3 LED BULB*
30W
Giallo = 3000 K | *Yellow = 3000 K*
Bianco = 6000 K | *White = 6000 K*
Blu = 7000 K | *Blue = 7000 K*





267001000

airMAN

EASY RIDER
• Kit di riparazione pneumatici
• Compressore d'aria ad alta pressione adatto per gomme scooter, auto, bici, Atv
• Connettori: Pinze batteria, anelli batteria, presa 12V accendisigari
• Tempi di gonfiaggio: Pneumatico moto 3 min Pneumatico auto standard 5 min.
• Adattatori giochi gonfiabili e pneumatici ciclo
• Pressione massima 6 bar
• Dimensioni: 120 x 145 mm
• Manometro integrato
• Flacone 250 ml di prodotto sigillante
• Tire repair kit
• High pressure air compressor for scooter, car, bicycle and Atv
• Power connections: Scooter rings, crocodile clamps, 12V plug
• Inflation times: Scooter tire 3 min - Standard car tire 5 min
• Adaptors for inflatable toys and bicycle tire
• Max pressure 6 Bar
• Dimensions: 120 x 145 mm
• Built in pressure gauge
• 250 ml sealant bottle



267001010

airMAN

EASY RIDER MODELLO BMW
• Kit di riparazione pneumatici
• Compressore d'aria ad alta pressione adatto per gomme scooter, auto e bici
• Connettori: Spina 12V modello DIN (3,4 m)
• Tempi di gonfiaggio: Pneumatico moto 3 min
• Pressione massima 6 bar
• Dimensioni: 120 x 145 mm
• Manometro integrato
• Flacone 250 ml di prodotto sigillante
• Tire repair kit
• High pressure air compressor
• Power connections: 12V Plug DIN (3,4 m)
• Inflation times: Motorcycle tire 3 min
• Max pressure 6 Bar
• Dimensions: 120 x 145 mm
• Built in pressure gauge
• 250 ml sealant bottle





KIT RIPARAZIONE PNEUMATICI

REPAIR KITS FOR TIRES

267001030

airMAN

TOUR
- Kit di riparazione pneumatici
- Compressore d'aria ad alta pressione adatto per gomme scooter, auto e bici
- Connettori: Spina 12V modello DIN (3,4 m)
- Tempi di gonfiaggio: Pneumatico moto 3 min
- Pressione massima 6 bar
- Dimensioni: 120 x 145 mm
- Manometro integrato
- *Tire repair kit*
- *High pressure air compressor*
- *Power connections: 12V Plug DIN (3,4 m)*
- *Inflation times: Motorcycle tire 3 min*
- *Max pressure 6 Bar*
- *Dimensions: 120 x 145 mm*
- *Built in pressure gauge*



267200600

airMAN

FLACONE 250 ML DI PRODOTTO SIGILLANTE
- Tecnologia gel
- Facilmente lavabile ad acqua

250 ML SEALANT BOTTLE
- *Gel technology*
- *Washed off with water*



267001020

airMAN

AIRGUN
- Compressore professionale ricaricabile senza fili
- Pressione massima 10 Bar
- Adattatori giochi gonfiabili e pneumatici ciclo
- Applicabile a: ATV, Pneumatici ciclo, equipaggiamenti sportivi
- Dimensioni: 160 x 260 mm
- Manometro integrato
- Settaggio della pressione
- 1 Batteria Li-ion 230V ricaricabile, 1 con adattatore 12V (3,4 m)
- *High pressure professional air compressor rechargeable cordless*
- *Max pressure 10 Bar*
- *Adaptor for inflatable toys and bicycle tire*
- *Applications: ATV, Bicycle tires, sporting equipments*
- *Dimensions: 160 x 260 mm*
- *Built in pressure gauge*
- *Pressure preset*
- *1 rechargeable Li-ion batterie 230V, 1 with 12V plug (3,4 m)*





AIRMAN: CARATTERISTICHE TECNICHE - *TECHNICAL FEATURES*

	EASY RIDER	***EASY RIDER***	**AIRGUN**	***AIRGUN***
NOTA - ***NOTE***	Può lavorare al max 10 minuti in continuo	*Can work max 10 minutes continuously*	Può lavorare al max 10 minuti in continuo	*Can work max 10 minutes continuously*
COMPRESSORE - ***COMPRESSOR***				
Corrente *Power*	10A	*10A*	10A	*10A*
Pressione massima *Max pressure*	6 bar	*6 bar*	10 bar	*10 bar*
Dimensioni (BxH) *Compressor size (BxH)*	120 x 145 mm	*120 x 145 mm*	160 x 260 mm batteria inclusa	*160 x 260 mm included Battery*
Connettori *Power connection*	Modello standard: Pinze batteria, anelli batteria, presa 12V accendisigari Modello Bmw: Spina 12V Modello DIN	*Standard model: Scooter rings, Crocodile clamps, 12V plug* *Bmw model: 12V Plug DIN*	Batteria con 12V adattatore, 230V-Li-Ion-battery	*Battery with 12V plug, 230V-Li-Ion-battery*
Indicatore di Pressione *Pressure display*	Indicatore in bar & psi	*Lighted display in bar & psi*	Pre-set, indicatore in bar, kpi, psi	*Pre-set, lighted display in bar, kpi, psi*
Tempi di gonfiaggio gomme (2,5 bar): *Inflation times (2,5 bar):*	Bici 3:00 Minuti Auto (media) 5:00 Minuti Auto (grande) 7:30 Minuti	*Bicycle 3:00 Minutes* *Car (standard) 5:00 Minutes* *Car (big) 7:30 Minutes*	Bici 1:00 Minuto Moto 3:00 Minuti	*Bicycle 1:00 Minute* *Motorcycle 3:00 Minutes*
SIGILLANTE - ***SEALANT***				
Tipo *Sealant type*	Tecnologia Gel	*Particle Gel Technology*	-	-
Quantità *Sealant size*	250 ml	*250 ml*	-	-
Dimensione foro massimo *Max. puncture*	10 mm	*10 mm*	-	-
Proprietà del sigillante *Properties of sealant*	Lavabile ad acqua con estrema facilità, non tossico, non infiammabile	*Washed off with water, non-toxic, Non-flammable*	-	-
Durata a stock *Shelf life*	5 anni	*5 years*	-	-
ACCESSORI - ***ACCESSORIES***				
Adattatori / Giochi *Adaptor / toys*	Gomme bici (bassa pressione), palloni, gonfiabili	*Bike tires (low pressure), balls, inflatable toys, valve extractor*	Gomme bici (anche alta pressione), palloni, gonfiabili, prolunga, adattatore	*Bike tires (also high pressure), Balls, inflatable toys, extension hose, line adaptor*
Confezione *Transport bag*	Borsa con logo	*Cotton bag with Logo*	Borsa con logo	*Nylonbag with Logo*
SICUREZZA - ***SAFETY***				
Distanza percorribile dopo la riparazione *Recommended driving distance after repair*	max. 200 km	*max. 200 km*	-	-
Velocità max dopo la riparazione *Max. speed limit*	80 km/h	*80 km/h*	-	-
Certificazioni *Certification*	CE-Certification, ISO 9001:2008, ISO 14001:2004, ISO TS 16949:2	*CE-Certification, ISO 9001:2008, ISO 14001:2004, ISO TS 16949:2*	CE-Certification, ISO 9001:2008, ISO 14001:2004, ISO TS 16949:2	*CE-Certification, ISO 9001:2008, ISO 14001:2004, ISO TS 16949:2*



KIT RIPARAZIONE PNEUMATICI

REPAIR KITS FOR TIRES

267020110

KIT GONFIAGGIO E RIPARAZIONE TUBELESS IN BORSA RMS
COMPOSTO DA:
• 1 Tubetto mastice 12 cc.
• 1 Punteruolo
• 1 Tronchesino
• 3 bombolette Co2 16 Gr.
• 1 Raccordo universale
• 1 Prolunga raccordo flessibile
• 1 Set coni riparazione
TYRE REPAIR KIT IN RMS BAG:
• 1 Rubber cement 12 cc.
• 1 Awl
• 1 Cutter
• 3 Carbon dioxide cartridgess
• 1 Universal connector
• 1 Flexible connector extension
• 1 Tyre plug kit



588080750

BOMBOLETTE CO2 • 3 pcs con filetto 25 gr.
CO2 CARTRIDGES • 3 pcs with thread 25 gr.



588080190

BOMBOLETTE CO2 • 3 pcs con filetto 16 gr.
CO2 CARTRIDGES • 3 pcs with thread 16 gr.



588080751

BOMBOLETTE CO2 • 30 pcs con filetto 25 gr.
CO2 CARTRIDGES • 30 pcs with thread 25 gr.





588080192

BOMBOLETTE CO2 • 50 pcs con filetto 16 gr.
CO2 CARTRIDGES • 50 pcs with thread 16 gr.



267020160

Kit 3 Coni ricambio per 267020110 | *3 Pcs Tyre Plug kit for 267020110*



267020020

KIT RIPARAZIONE COPERTURA TUBELESS IN SCATOLA
COMPOSTO DA:
• 1 tubetto mastice 22 cc
• 2 punteruoli 1 taglierino
• 5 pezzi di pura gomma
TUBELESS TYRE REPAIR KIT WITH:
• 1 Tyre rubber cement 22 cc tube
• 2 Awles 1 Cutter
• 5 rubber sticks



267020030

STECCHE DI GOMMA PER RIPARAZIONE TUBELESS | *TYRE REPAIRING RUBBER STICKS*



267200760

GOMMA SPRAY Conf. 200 ml | *INFLATE AND REPAIR 200 ml*



567020200

SCATOLA 12 TUBETTI MASTICE 22 cc | *PACK 12 TUBES RUBBER CEMENT 22 cc*





KIT RIPARAZIONE PNEUMATICI

REPAIR KITS FOR TIRES

567020060

KIT RIPARAZIONE CAMERA D'ARIA (no Tubeless)
Confezione in blister composto da:
• 5 pezze assortite
• 1 tubetto mastice 10 cc
• 1 raschietto

INNER TUBE REPAIR KIT
Blister packaging with:
• 5 tyre repair patches
• 1 Rubber cement 10 cc tube
• 1 Scraper



KIT PRIMO SOCCORSO

FIRST AID KIT



267002060

Conforme DIN13167 - 2014 | *Conforms to DIN13167 - 2014*
Contenuto:
1 x rotolo cerotto adesivo
4 x bende adesive (10 x 6cm)
2 x cerotti resistenti all'acqua confezionati singolarmente (4 x 6,5 cm)
2 x cerotti resistenti all'acqua (12 x 2 cm)
2 x cerotti resistenti all'acqua confezionati singolarmente (1,9 x 7,2 cm)
4 x cerotti resistenti all'acqua confezionati singolarmente (2,5 x 7,2 cm)
1 x tampobenda sterile (8 x 10 cm)
1 x tampobenda sterile (10 x 12 cm) 1 x fasciatura sterile (ustioni)
1 x coperta isotermica d'emergenza 1 x forbici
4 x guanti monouso
2 x salviettine umidificate confezionate singolarmente 1 x lista del contenuto
1 x manuale kit pronto soccorso
Kit contents:
1 x adhesive plaster tape
4 x adhesive plaster bandages (10 x 6cm)
2 x water resistant single-packed plasters (4 x 6,5 cm)
2 x water resistant plasters (12 x 2 cm)
2 x water resistant single-packed plasters (1,9 x 7,2 cm)
4 x water resistant single-packed plasters (2,5 x 7,2 cm)
1 x first aid bandage roll (8 x 10 cm)
1 x first aid bandage roll (10 x 12 cm) 1 x sterile dressing (burns)
1 x first aid blanket 1 x scissors
4 x disposable gloves
2 x single-packed wet wipes 1 x list of contents
1 x first aid kit manual



SMANICATO RIFRANGENTE - *REFLECTIVE VEST*

546060000

Taglia M | *Size M*
Ceritificato CE EN1150 | *CE EN1150 Certification*



546060010

Taglia L | *Size L*
Ceritificato CE EN1150 | *CE EN1150 Certification*



546060020

Taglia XL | *Size XL*
Ceritificato CE EN1150 | *CE EN1150 Certification*



OFFICINA
WORKSHOP
TALLER
ATELIER



Outils d'Atelier
Produits de Nettoyage
Outils
Visserie



Productos para Taller
Productos para limpiar
Herramientas
Tornilleria



Workshop Tools
Cleaning Products
Tools
Hardware



PRODOTTI OFFICINA **1524**
PRODOTTI PULIZIA **1537**
ATTREZZI E UTENSILI **1539**
MINUTERIA METALLICA **1575**

142740010

Confezione Pz. 10 | *10 Pcs Packing*

MISURINO CENTILITRATO PER MISCELA 2% DA 10 CL.
OIL DOSAGE BEAKER 2% - 10 CL.

142740020

Con coperchio | *With cap*

MISURINO CENTILITRATO DA 10 CL. DOPPIA CENTILITRATURA 2/4%
DOSAGE BEAKER 2/4% 10 CL.

267200130

PASTA PER GUARNIZIONI MOTORSIL D ROSSA (60 Gr)
Tenuta di accoppiamenti meccanici, termomeccanici, chimici, elettronici, elettromeccanici, che operino in condizioni particolarmente difficili.
RED MOTORSIL D GASKET SEALANT (60 Gr)
Sealant for mechanical, thermo-mechanical, chemical, electronic, electro-mechanical couplings working in particularly difficult conditions.



267200140

PASTA PER GUARNIZIONI MOTORBLACK NERA (60 Gr)
Sigillatura coppa olio, giunti dinamici, differenziale, scatola cambio e pompa acqua.
BLACK MOTORBLACK GASKET SEALANT (60 Gr)
Sealant for Fire engine oil sump and dynamic joints, differentials, gearboxes, coolant pumps.



267200150

ROLIN FLUID VERDE LIQUIDO PER RADIATORI (1 Lt.)
Liquido concentrato pluristagionale per radiatori, ad azione protettiva, antigelo e antiebollizione. Può essere utilizzato anche per rabbocchi, in aggiunta a qualsiasi liquido preesistente di colore diverso.
CONDENSED RADIATOR FLUID (1 Lt.)
Multi seasonal concentrated liquid radiator, acting protective, anti-freeze and anti-boiling. can also be used for filling, in addition to any liquid existing in a different color.



267200160

VERNICE SPRAY NERO OPACO PER MARMITTE (400 ml)
Smalto spray per alta temperatura nero opaco. Può essere utilizzato su superfici di metallo sottoposte ad alte temperature quali: parti del motore, impianti di scarico. Resiste fino a 600° C.
EXHAUSTS MATT BLACK SPRAY PAINT (400 ml)
High temperature spray matt black. Can be used on metal surfaces subjected to high temperatures such as parts of engine, exhaust systems. Resists up to 600 °





267200162

VERNICE SPRAY TRASPARENTE PER MARMITTE (400 ml)
Smalto spray per alta temperatura trasparente. Può essere utilizzato su superfici di metallo sottoposte ad alte temperature quali: parti del motore, impianti di scarico. Resiste fino a 600° C.
EXHAUSTS TRANSPARENT SPRAY PAINT (400 ml)
High temperature spray transparent. Can be used on metal surfaces subjected to high temperatures such as parts of engine, exhaust systems. Resists up to 600 °



267200170

FRENAFILETTI FORTE (10 ml)
Serraggio di prigionieri, dadi e bulloni non soggetti a smontaggio. Prodotto a bassa viscosità. Elimina gli allentamenti dovuti a vibrazioni, urti, sbalzi di temperatura. Impedisce la corrosione ed il grippaggio. Frenatura permanente.
THREADLOCKER STRONG (10 ml)
Tightening of studs, nuts and bolts not subjet to removal. Low viscosity product. Avoid loosening due to vibrations, shocks and temperature changes. Prevents corrosion and seizing up. Permanent tigheting.



267200400

FRENAFILETTI MEDIO (50 ml)
Serraggio di prigionieri, dadi e bulloni non soggetti a smontaggio. Prodotto a bassa viscosità. Elimina gli allentamenti dovuti a vibrazioni, urti, sbalzi di temperatura. Impedisce la corrosione ed il grippaggio. Frenatura permanente.
MEDIUM THREADLOCKER (50 ml)
Tightening of studs, nuts and bolts not subjet to removal. Low viscosity product. Avoid loosening due to vibrations, shocks and temperature changes. Prevents corrosion and seizing up. Permanent tigheting.



267200290

PULITORE INIETTORI BENZINA (250 ml)
Ripristina con effetto immediato l'efficacia del sistema di alimentazione. Pulisce all'istante e disincrosta gli iniettori. Scioglie depositi e residui nel sistema di alimentazione. Migliora la combustione.
FUEL INJECTORS CLEANER (250 ml)
Restore with immediate effect the efficiency of the power system. Instantly cleans and descaling the injectors. Dissolves deposits and wastes in power system improves the combustion.



267200310

MASTICE PER GUARNIZIONE (100 ml)
Posizionamento e fissaggio di ogni tipo di guarnizione tradizionale. Alto potere adesivo, assicura una tenuta perfetta anche su superfici non regolari. Resiste ad oli , benzina, fluidi refrigeranti e alle pressioni.
SEALING GASKET CEMENT (100 ml)
Positioning and securing of any type of standard gasket. High power adhesive, ensuring a perfect seal also on irregular surfaces. Resistant to oils, gas, refrigerant fluids and pressure.



267200840 NEW

SPRAY STARTER (200 ml)
Applicazione: motore. Facilita l'avviamento dei motori diesel e benzina durante la stagione invernale, assicurando sempre una rapida accensione anche a temperature molto basse.
STARTER SPRAY (200 ml)
Facilitates starting diring winter season, alwais ensuring a fast ingnition even at very low temperatures.



267200390

IMPERMEABILIZZANTE (200 ml)
Impermeabilizzante per tutti i materiali porosi.
FULCRON WATERPROOFING (200 ml)
Water proofing for all porous materials.



267200420

PULITORE SISTEMA ASPIRAZIONE E CARBURATORE (500 ml)
Applicazione: per motori alimentati a benzina, gpl, metano. Pulisce ed elimina i depositi nei condotti di aspirazione. Scioglie gomme, lacche ed ogni genere di depositi nei corpi farfallati. Indicato per la pulizia dei carburatori.
CARBURETOR CLEANER (500 ml)
It cleans and eliminates debris in the air intake ducts. It dissolves rubber, build-up and every type of debris contained inside the throttle body. It is suitable for cleaning carburettors. It restores CO and HC values. It is suitable for all single-point, multi-point injection engines, throttle bodies and carburettors.



267200460

SVITOL PROFESSIONAL SILIKON IMPERMEABILIZZANTE LUBRIFICANTE (400 ml)
Impermeabilizzante e lubrificante. Resiste all'acqua e allo sfregamento. Protegge da gelo e corrosione. Ideale per le guarnizioni.
PROFESSIONAL SVITOL SILIKON WATERPROOFING LUBRICANT (400 ml)
Lubricant and waterfroofing. Resistant to water and rubbing. Protects from frost and corrosion Ideal for seals.



267200480

SVITOL PROFESSIONAL GRASSO LUBRIFICANTE AD ALTE PRESTAZIONI PTFE (400 ml)
Grasso lubrificante spray ad alte prestazioni Grasso spray ad alte prestazioni. Diminuisce l'attrito e resiste a forti pressioni. Lunga durata. Non attira sporco e impurità.
SVITOL PROFESSIONAL PTFE HIGH PERFORMANCE LUBRICATING GREASE (400 ml)
High performance long lasting lubricant grease. Does not attract dust and impurities.



267200550

RIPARA METALLO (57 gr)
Pronto all'uso. Forte, facile, rapido. Applicabile anche in presenza di fuoriuscita di acqua. Aderisce anche su superfici bagnate. Non ritira durante l'indurimento. Dopo l'indurimento, può essere trapanato, levigato, lavorato, verniciato. Serve per riparare, ricostruire, otturare, sigillare, stuccare metallo, ferro, alluminio, rame, ottone, bronzo ghisa, piombo e plastiche dure. Ripara tubi, valvole, serbatoi, parti di motore, arnesi di metallo, condotti per l'aria, parti di bici, moto ed auto.
METAL REPAIRER (57 gr)
Ready to use. Strong, easy, fast. Applicable even in the presence of leakage of water. Adheres to wet surfaces. Non-shrinking during hardening. After curing, it can be drilled, sanded, machined, painted. It is used to repair, rebuild, fill, seal, caulk metal, iron, aluminum, copper, brass, bronze, cast iron, lead, and hard plastics. Repair pipes, valves, tanks, motor parts, metal tools, air ducts, parts of bicycles, motorcycles and cars.



267200570

CARBOSILICIUM ACQUA GRANA FINE
(scatola in metallo, 70 ml)
Prodotto per la rapida smerigliatura lucidatura delle valvole e dei condotti dei motori a combustione interna. Massimo grado di purezza. Durezza elevatissima. Smerigliatura perfetta.
FINE-GRAIN CARBOSILICIUM WATER
(Metal box, 70 ml)
Product for the rapid grinding polishing of valves and ducts of internal combustion engines. Maximum degree of purity. Extreme hardness. Grinding perfect.





267200580

GRASSO AL LITIO NLGI 3 (0,85 kg)
Speciale Multiuso al Litio indicato in particolare per l'ingrassaggio di mozzi ruote, trasmissioni e cuscinetti. Elevata stabilità termica per l'utilizzo con temperature da -20°C a +120°C. L'eccellente stabilità meccanica permette di ridurre al minimo la fuoriuscita d'olio. Alta resistenza all'ossidazione per una migliore durata del grasso. Alta resistenza all'acqua per una superiore tenuta all'azione dilavante dell'acqua. Il prodotto si presenta di colore verde scuro e di aspetto pomatoso e filante.
LITHIUM GREASE NLGI 3 (0,85 kg)
High thermal stability for use in temperatures from -20 ° C to +120 ° C. The excellent mechanical stability allows to minimize the leakage of oil. High oxidation resistance for better durability of the grease. High water resistance. The product has a dark green color.



267200640

PULITORE FRENI E METALLI (500 ml)
Prodotto spray per la pulizia di freni a tamburo, a disco, pinze e ceppi. Dissolve e rimuove rapidamente grasso, olio, residui, ecc.
MOTORCYCLE BRAKES AND METAL PARTS CLEANER (500 ml)
Spray products for cleaning brake drums, disks, calipers and brake shoes. Quickly dissolves and removes grease, oil and dirt.



267200650

TURAFALLE METALLICO (25 gr)
Sigilla ogni tipo di incrinatura nei carter di alluminio. Forte e tenace. Azione super rapida. Consigliato per sigillare le soffiature di fusione. Sigilla le saldature imperfette delle riparazioni del monoblocco. Monodose facile da usare.
METALLIC SEALING COMPOUND (25 gr)
Seals everykind of cracking in alloycrankcase. Strong and tenacious. Superfast action.



267200660

GRASSO CUSCINETTI AL LITIO (500 ml)
Grasso al litio complesso, speciale per alte temperature. Elevata adesività. Ottima resistenza all'acqua. Resiste a vibrazioni e centrifugazione. Riduce l'attrito e protegge dalla corrosione. Altissima resistenza meccanica ed elevata resistenza al carico. Permette intervalli di manutenzione più lunghi. Temperatura di impiego: da -25°C a +180°C, con punte fino a +220°C.
BEARING LITHIUM GREASE (500 ml)
Lithium complex grease special for high temperatures. Excellent water resistance. Resistant to vibrations and centrifugation. Reduces friction and protects against corrosion.



267200670

GRASSO CUSCINETTI AL LITIO (1000 ml)
BEARING LITHIUM GREASE (1000 ml)



267200710

PASTA MONTAGGIO MARMITTE (80 ml)
EXHAUST-MUFFLER SEALANT (80 ml)



267200730

Conf. 200 ml

LUBRIFICANTE CATENA P.T.F.E. - ***CHAIN P.T.F.E. LUBRIFICANT SPRAY***



267200740

Conf. 200 ml

LUBRIFICANTE CATENA - ***CHAIN LUBRIFICANT***



267200750

Conf. 500 ml

PULITORE CATENA - ***CHAIN CLEANER***



267200120

LIQUIDO FRENI DOT 4 (175 ml)
Compatibile con tutti i tipi di gommini impiegati in primo impianto
Punto di ebollizione 260° (ERBP)
Punto di ebollizione a umido min. 140°C (WERBP)
BRAKE FLUID DOT 4 (175 ml)
Compatible with all types of rubbers used in O.E.
Boiling point of 260 ° (ERBP)
Wet boiling point min. 140 ° C (WERBP)



267200230

Taglia "M" | *Size "M"*
100 Guanti | *100 Gloves*

GUANTI IN NITRILE
- Monouso senza polvere ambidestri
- Protezione delle mani per usi di breve durata
- Eccellente sensibilità
- Si indossano e si tolgono facilmente
- Esenti da rischi di allergia al lattice

Rispettano le norme: ASTM-D3578-77(91), EN 455 1 e 2

NITRILE GLOVES
- *Single-use without powder, ambidextrous*
- *Protective gloves for short-term use*
- *Excellent sensitivity*
- *You put on and take off easily*
- *No risk of latex allergy*

According to: ASTM-D3578-77(91), EN 455 1 and 2



267200240

Taglia "L" | *Size "L"*
100 Guanti | *100 Gloves*

GUANTI IN NITRILE
- Monouso senza polvere ambidestri
- Protezione delle mani per usi di breve durata
- Eccellente sensibilità
- Si indossano e si tolgono facilmente
- Esenti da rischi di allergia al lattice

Rispettano le norme: ASTM-D3578-77(91), EN 455 1 e 2

NITRILE GLOVES
- *Single-use without powder, ambidextrous*
- *Protective gloves for short-term use*
- *Excellent sensitivity*
- *You put on and take off easily*
- *No risk of latex allergy*

According to: ASTM-D3578-77(91), EN 455 1 and 2





267200250

Taglia "XL" | *Size "XL"*
100 Guanti | *100 Gloves*

GUANTI IN NITRILE
- Monouso senza polvere ambidestri
- Protezione delle mani per usi di breve durata
- Eccellente sensibilità
- Si indossano e si tolgono facilmente
- Esenti da rischi di allergia al lattice

Rispettano le norme: ASTM-D3578-77(91), EN 455 1 e 2

NITRILE GLOVES
- *Single-use without powder, ambidextrous*
- *Protective gloves for short-term use*
- *Excellent sensitivity*
- *You put on and take off easily*
- *No risk of latex allergy*

According to: ASTM-D3578-77(91), EN 455 1 and 2



267200260

Taglia "M" | *Size "M"*
50 Guanti | *50 Gloves*

GUANTI IN NITRILE SPESSO
- Per uso professionale Classe 8.0 MIL
- Monouso ed ambidestri
- Esenti da rischi di allergia al lattice
- Rispettano le norme: EN388-EN455 1 e 2-ASTM D3578

NITRILE THICK GLOVES
- *For professional use Class 8.0 MIL*
- *Single-use and ambidextrous.*
- *No risk of latex allergy*
- *According to: EN388-EN455 1 and 2-ASTM D3578*



267200270

Taglia "L" | *Size "L"*
50 Guanti | *50 Gloves*

GUANTI IN NITRILE SPESSO
- Per uso professionale Classe 8.0 MIL
- Monouso ed ambidestri
- Esenti da rischi di allergia al lattice
- Rispettano le norme: EN388-EN455 1 e 2-ASTM D3578

NITRILE THICK GLOVES
- *For professional use Class 8.0 MIL*
- *Single-use and ambidextrous.*
- *No risk of latex allergy*
- *According to: EN388-EN455 1 and 2-ASTM D3578*



267200280

Taglia "XL" | *Size "XL"*
50 Guanti | *50 Gloves*

GUANTI IN NITRILE SPESSO
- Per uso professionale Classe 8.0 MIL
- Monouso ed ambidestri
- Esenti da rischi di allergia al lattice
- Rispettano le norme: EN388-EN455 1 e 2-ASTM D3578

NITRILE THICK GLOVES
- *For professional use Class 8.0 MIL*
- *Single-use and ambidextrous.*
- *No risk of latex allergy*
- *According to: EN388-EN455 1 and 2-ASTM D3578*



267200620

SVITOL LUBRIFICANTE (400 ml)
L'esclusiva multifunzionalità lo rende l'alleato sicuro e indispensabile nelle mille occasioni d'uso quotidiano: dalla casa al giardino, dallo sport alla nautica, dal lavoro al fai da te. Lubrifica Sblocca. Protegge dalla corrosione. Elimina l'umidità

SVITOL LUBRICANT SPRAY (400 ml)
Exclusively and multifunctional. your safe, essen- tially for hundreds of everyday uses: home, garden, sport, boats, work and diy. Lubricates Unlocks. Corrosion protection. Removes humidity



267200630

SVITOL LUBRIFICANTE (200 ml)
L'esclusiva multifunzionalità lo rende l'alleato sicuro e indispensabile nelle mille occasioni d'uso quotidiano: dalla casa al giardino, dallo sport alla nautica, dal lavoro al fai da te. Lubrifica Sblocca. Protegge dalla corrosione Elimina l'umidità

SVITOL LUBRICANT SPRAY (200 ml)
Exclusively and multifunctional. your safe, essen- tially for hundreds of everyday uses: home, garden, sport, boats, work and diy. Lubricates Unlocks. Corrosion protection Removes humidity



267200490

SVITOL PROFESSIONAL LUBRIFICANTE AL LITIO (400 ml)
Lubrificante al litio ad alta viscosità Lunga resistenza all'acqua e all'usura. Grasso lubrificante ad alta viscosità. Sicuro anche su gomma e plastiche.
SVITOL PROFESSIONAL LITHIUM LUBRICANT (400 ml)
High-viscosity lithium lubricant. Long-lasting resistance to water and use Safe on rubber and plastic



267200500

SVITOL PROFESSIONAL PULITORE CONTATTI (400 ml)
Protegge dall'ossidazione e dall'umidità. Disossida e riattiva i contatti ossidati. Sicuro su plastiche, metalli e gomma.
SVITOL PROFESSIONAL CONTACTS CLEANER (400 ml)
Protects from oxidation and moisture Deoxidizes and reactivates contacts. Does not damage rubber and plastic parts.



267200220

PASTA LAVAMANI (5 lt)
SOOTHING HAND CLEANING PASTE (5 lt)



267200200 NEW

FULCRON CONCENTRATO SUPERPULITORE SGRASSANTE NON TOSSICO (500 ml)
Sgrassante per tutte le superfici di auto, industria, casa, caravaning, nautica, tempo Libero, ecc.
FULCRON CONDENSED GREASE REMOVER (500 ml)
For all surfaces: cars, industry, home, caravans, boats, leisure, etc.



267200210

FULCRON CONCENTRATO SUPERPULITORE SGRASSANTE NON TOSSICO (5 Lt.)
FULCRON CONDENSED GREASE REMOVER (5 Lt.)



267200850 NEW

RIPARA PLASTICA (57gr)
Serve per riparare, ricostriuire, otturare, sigillare, stuccare, anche sott'acqua, qualsiasi superficie in plastica e vetroresina. Ripara tubi, tubi in PVC, parti in plastica di bici, moto ed auto, scafi di barche, taniche dell'acqua, serbatoi. Sigilla cavi elettrici con scatole di connessione.
PLASTIC REPAIR (57gr)
This product is used to repair, rebuild, perforate, seal, patch, including under water, any plastic or fibreglass surface. It repairs pipes, PVC pipes, plastic parts on bicycles, motorbikes and cars, watercraft, water jerrycans, tanks. It seals electrical cables with connection boxes.



267000550

POMPA TRAVASO OLIO PER FUSTO 60 L
PUMP FOR OIL BARREL 60 L



267209900

WRAPPER

Colore Giallo Traffico | *Colour Traffic Yellow*



267209901

WRAPPER

Colore Arancio Puro | *Colour Pure Orange*



267209902

WRAPPER

Colore Rosso Fuoco | *Colour Flame Red*



267209903

WRAPPER

Colore Rosso Traffico | *Colour Traffic Red*



267209904

WRAPPER

Colore Rosa Chiaro | *Colour Light Pink*



267209905

WRAPPER

Colore Viola Erica | *Colour Heather Violet*



267209906

WRAPPER

Colore Lilla Bluastro | *Colour Blue Lilac*



267209907

WRAPPER

Colore Blu Napoli | *Colour Naples Blue*



267209908

WRAPPER

Colore Blu Traffico | *Colour Traffic Blue*



267209909

WRAPPER

Colore Turchese | *Colour Turquoise Blue*



267209910

WRAPPER

Colore Grigio Argento | *Colour Silver Grey*



267209912

WRAPPER

Colore Verde Menta | *Colour Mint Green*



267209913

WRAPPER

Colore Marrone Cioccolata | *Colour Chocolate Brown*



267209914

WRAPPER

Colore Nero Opaco | *Colour Black Matt*



267209915

WRAPPER

Colore Bianco Opaco | *Colour Pure White Matt*



267209916

WRAPPER

Colore Trasparente Opaco | *Colour Trasparent Matt*



267209917

WRAPPER

Colore Trasparente Lucido | *Colour Trasparent Glossy*



267209918

WRAPPER

Colore Argento | *Colour Silver*



267209919

WRAPPER

Colore Oro | *Colour Gold*



267209920

WRAPPER

Colore Giallo Fluo | *Colour Fluo Yellow*



267209921

WRAPPER

Colore Rosso Fluo | *Colour Fluo Red*



267209922

WRAPPER

Colore Fuxia Fluo | *Colour Fluo Fuxia*



267209923

WRAPPER

Colore Verde Fluo | *Colour Fluo Green*



267209924

WRAPPER

Colore Blu Fluo | *Colour Fluo Blue*



267209925

WRAPPER

Colore Arancio Fluo | *Colour Fluo Orange*



267209926

WRAPPER

Colore Blue Horizon | *Colour Blue Horizon*



267209927

WRAPPER

Colore Beige Sand | *Colour Beige Sand*



267209928

WRAPPER

Colore Verde Canna | *Colour Reed Green*



267209929

WRAPPER

Colore Kaki Olive | *Colour Kaki Olive*



267209930

WRAPPER

Colore Grigio Verde | *Colour Grey Green*



267209931

WRAPPER

Colore Grigio Scuro | *Colour Dar Grey*



267209932

WRAPPER

Colore Mostarda | *Colour Mustard*



267209933

WRAPPER

Colore Glitter Argento | *Colour Silver Glitter*



267209934

WRAPPER

Colore Glitter Oro | *Colour Gold Glitter*



267209936

WRAPPER

Colore Grigio Titanio | *Colour Titanium grey*



267209937

WRAPPER

Colore Nero metalizzato | *Colour Black metalized*





267209941

WRAPPER

Colore Verde Kawasaki | *Colour Kawasaki Green*



267209944

WRAPPER

Colore Blu scuro navy | *Colour Dark blue navy*



267209946 NEW

WRAPPER

Colore Grigio Nardò | *Colour Nardò Grey*



267209945

WRAPPER

Oscurante fanali fume | *Smoke lights paint spray*



267209938

WRAPPER

PISTOLA PER BOMBOLETTA SPRAY - ***SPRAY CAN GUN***



267209939

WRAPPER

Confezione Pz. 2 | *2 Pcs Packing*

COPRI VALVOLA CERCHI - ***RIM VALVE MASKING PROTECTION***



267209940

WRAPPER

KIT 15 CARTONCINI MASCHERATURA - ***15 PCS RIM MASKING CARD***



267209942

WRAPPER

Confezione Pz. 4 | *4 Pcs Packing*

EROGATORE BIANCO (RICAMBIO) - ***WHITE CAN NOZZLE (SPARE)***



267209943

WRAPPER

Confezione Pz. 4 | *4 Pcs Packing*

EROGATORE NERO (SPRUZZO FINE) - ***BLACK CAN NOZZLE (ROUND SPRAY)***



267209935

WRAPPER

Confezione Pz. 4 | *4 Pcs Packing*

EROGATORE ROSSO PROFESSIONALE REGOLABILE (SPRUZZO A VENTAGLIO FINO A 20 cm) - ***RED CAN NOZZLE (WIDE SPRAY TO 20 cm)***





267200300

Confezione 35x40 cm | *Packaging 35x40 cm*

PELLE DI DAINO SINTETICA
Pelle di daino sintetica Wizzy
SYNTHETIC LEATHER
Wizzy synthetic leather



267200360

RINNOVA FANALI (150 gr.)
Pasta per la lucidatura manuale di fari opacizzati e può essere usato anche per la lucidatura di parabrezza di scooter o cupolini di moto.
HEADLIGHT LENS CLEANING PASTE (150 gr.)
Designed to restore the transparency of motorcycle lights and for the brightness windscreens.



267200590

ACQUAZERO (400 ml)
Lava, lucida e protegge la carrozzeria di auto, scooter, camper, senza l'utilizzo di acqua: è sufficiente spruzzarlo sulla superficie da trattare e poi passare un panno di cotone asciutto. È ideale per la carrozzeria, ma valido anche per le gomme e le parti in plastica. La formulazione a base di speciali cere nutritive, oltre catturare e rimuovere la polvere, escrementi di uccelli, inset- ti, sporco in genere, lascia la superficie trattata perfettamente lucida e protetta.
ACQUAZERO CLEANER (400 ml)
Washes, polishes and protects the bodywork of cars, scooters, motor homes, without the use of water: just spray it on the surface to be treated and then wipe with a dry cotton. Ideal for the body, but also valid for the tires and plastic parts. The formu- lation based on special waxes nutrients, as well as capture and remove dust, bird droppings, insects, dirt in general, leaving the treated surface perfectly polished and protected.



267200700

SMASH LUCIDA CRUSCOTTI (600 ml) - ***DASHBOARD CLEANER (600 ml)***



267200770

Conf. 150 Gr
CROMATURE BRILLANTI - ***CHROME CARE***



267200780

Conf. 400 ml
DETERGENTE MOTO - ***BIKE DEGREASER***



267200790

Conf. 75 ml

RAIN OFF VISIERE - ***VISORS RAIN OFF***



267200800

Conf. 75 ml

IGIENIZZANTE CASCO - ***HELMET SANITIZING***





267009123

SUPPORTO MOTORE | *ENGINE SUPPORT*

PIAGGIO: Vespa PX
LML



267000010

ATTREZZO TENDICAVO FRENO FRIZIONE | *BRAKE AND CLUTCH CABLE TENSIONER TOOL*



267009113

ATTREZZO FERMA VOLANO | *HOLDING FLYWHEEL TOOL*

PIAGGIO: Vespa



267000030

LEVA GOMME CICLOMOTORE | *MOPED TIRES LEVER*



267000193

SET CHIAVI | *KEYS SET*

PIAGGIO: Vespa 50



267000490

CAVALLETTO BASE MOBIILE | *MOVABLE STAND*
Portata massima: 250Kg | *Maximum Weight: 250Kg*



267000070

ESTRATTORE VOLANO Ø 22x1,5 (dx) | *FLYWHEEL PULLER Ø 22x1,5 (dx)*



267000080

ESTRATTORE VOLANO Ø 24x1 (dx) | *FLYWHEEL PULLER Ø 24x1 (dx)*



267000090

ESTRATTORE VOLANO Ø 26x1 (dx) | *FLYWHEEL PULLER Ø 26x1 (dx)*



267000100

ESTRATTORE VOLANO Ø 27x1 (sx) | *FLYWHEEL PULLER Ø 27x1 (sx)*



267000120

ESTRATTORE VOLANO Ø 28x1 (dx) | *FLYWHEEL PULLER Ø 28x1 (dx)*



267000150

ESTRATTORE SMONTAGGIO FRIZIONE | *CLUTCH PULLER*
Filetto interno | *Internal thread*

PIAGGIO 50-90-125: Vespa • Vespa ET3



267000160

ATTREZZO SMONTAGGIO GHIERA FRIZIONE | *CLUTCH NUT REMOVAL TOOL*

PIAGGIO: Vespa Pe • Vespa PX



267000140

ATTREZZO SPINGIDISCO FRIZIONE | *CLUTCH PRESSURE PLATE TOOL*

PIAGGIO 50-90-125: Vespa • Vespa ET3



267000180

CHIAVE CANDELA | *SPARK PLUG WRENCH*
Esagonale 13x21 | *Hexagonal 13x21*
Confezione Pz. 5 | *5 Pcs Packing*



267000190

CHIAVE CANDELA | *SPARK PLUG WRENCH*
Confezione Pz. 5 | *5 Pcs Packing*



267000240

CHIAVE CANDELA A TUBO CON SPINA | *SPARK PLUG WRENCH WITH PIN*
Esagonale Ø 16x100 | *Hexagonal Ø 16x100*
Confezione Pz. 5 | *5 Pcs Packing*



267000250

CHIAVE CANDELA A TUBO CON SPINA | *SPARK PLUG WRENCH WITH PIN*
Esagonale Ø 16x140 | *Hexagonal Ø 16x140*
Confezione Pz. 5 | *5 Pcs Packing*



267000260

CHIAVE CANDELA A TUBO CON SPINA | *SPARK PLUG WRENCH WITH PIN*
Esagonale Ø 18x100 | *Hexagonal Ø 18x100*
Confezione Pz. 5 | *5 Pcs Packing*



267000270

CHIAVE CANDELA A TUBO CON SPINA | *SPARK PLUG WRENCH WITH PIN*
Esagonale Ø 21x120 | *Hexagonal Ø 21x120*
Confezione Pz. 5 | *5 Pcs Packing*



267000200

CHIAVE CANDELA | *SPARK PLUG WRENCH*
Esagonale 13x13x21 | *Hexagonal 13x13x21*
Confezione Pz. 5 | *5 Pcs Packing*

PIAGGIO 125: Vespa ET3





267000210

CHIAVE CANDELA | *SPARK PLUG WRENCH*
Esagonale 11x13x21 | *Hexagonal 11x13x21*
Confezione Pz. 5 | *5 Pcs Packing*

PIAGGIO 50-90: Vespa



267000220

CHIAVE CANDELA | *SPARK PLUG WRENCH*
Esagonale 13x11x21 / 22 | *Hexagonal 13x11x21 / 22*
Confezione Pz. 5 | *5 Pcs Packing*

PIAGGIO 125-150: Vespa PX • Vespa Sprint



267000230

CHIAVE CANDELA SNODATA PER MOTO | *ARTICULATED SPARK PLUG WRENCH*
Esagonale Ø 21 | *Hexagonal Ø 21*
Lunghezza 230 mm | *Lenght 230 mm*
Confezione Pz. 5 | *5 Pcs Packing*



267000170

CHIAVE SERBATOIO | *TANK TOOL*
Vari tipi di Vespa - *Various Vespa Models*



267000173

CHIAVE SERBATOIO | *TANK TOOL*
PIAGGIO 160: Vespa GS



267000183

CHIAVE SERBATOIO | *TANK TOOL*
PIAGGIO 50: Vespa



ATTREZZI IMPIANTI ELETTRICI

ELECTRIC SYSTEM TOOLS

ELETTRICO | *ELECTRIC*

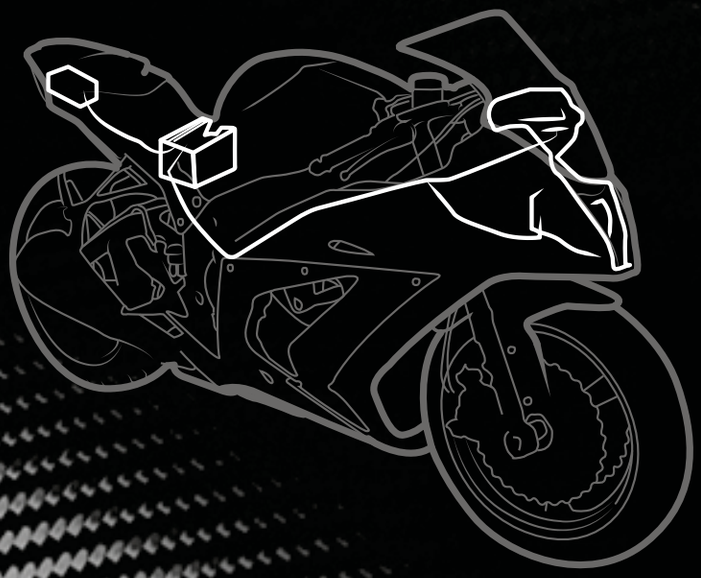

Bikeservice®
Motorcycle Service Tools







KIT GUAINA PER CABLAGGI ELETTRICI TERMORETRAIBILE IMPERMEABILE
Protezione e isolamento ottimali di componenti e cablaggi elettrici.
Rivestimento adesivo impermeabile della parete interna, realizza una sigillatura che impedisce la penetrazione dell'umidità.
Termoretrazione semplice e rapida con pistola termica.

WATERPROOF HEAT SHRINKABLE TUBE SET
Provides well protection and insulation of components and wires.
Water Proof adhesive lined inner wall seals, preventing moisture ingress.
Quick and simple to shrink by heat gun.

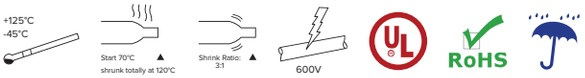

267005000	BS1031		



A

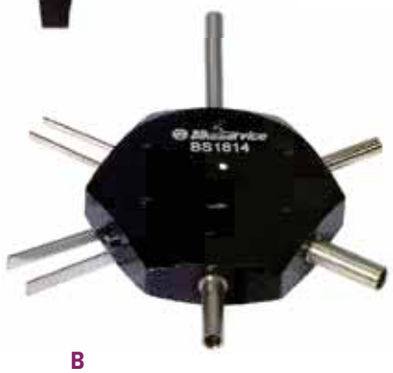

B

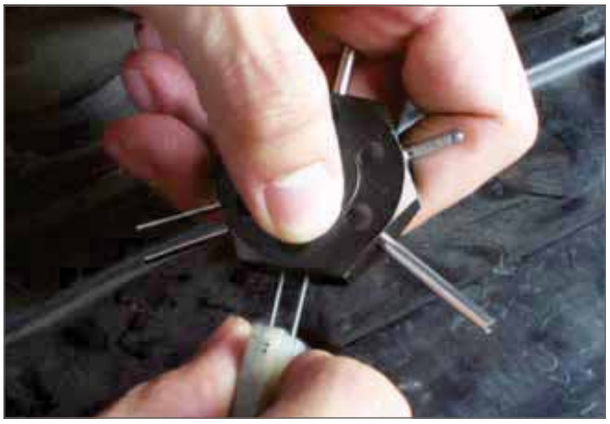

ATTREZZO SMONTAGGIO CONNETTORI ELETTRICI
Per rimuovere i cavi dai connettori senza danneggiarli.
Attrezzo multifunzione grazie alle diverse lame.

WIRE TERMINAL TOOL
Designed to remove wires from terminal without causing damage to either. Multi-Functional with different shaped blades.

A **267005010**	BS1815		
B **267005020**	BS1814		







PINZA PROFESSIONALE SPELAFILI
Pinza spelafili con tagliacavo. Ideale per spelare e tagliare rapidamente fili e cavi intrecciati in rame e alluminio.

PROFESSIONAL WIRE STRIPPER
Tool with plier nose and wire cutter. Copper stranded wire quickly, Suitable for stripping and cutting aluminum and copper wire quickly.

267005040	BS9484		

ATTREZZI MANUTENZIONE MOTORE

ENGINE SERVICE TOOLS

MOTORE | *ENGINE*

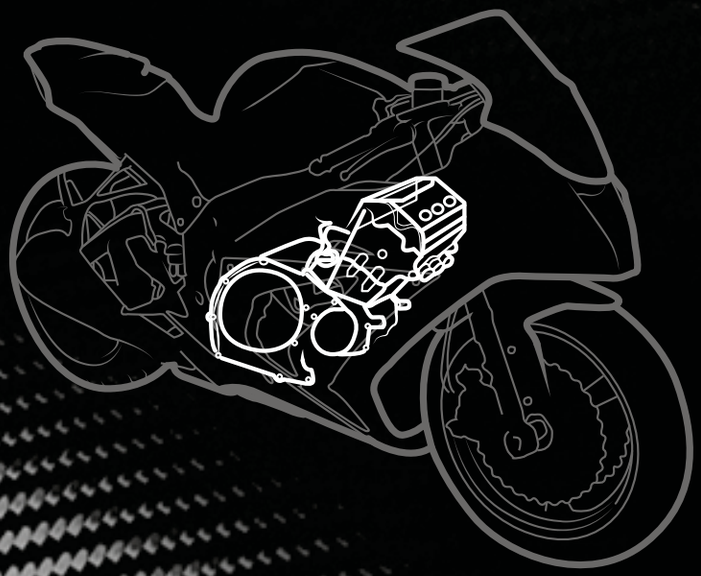

Bikeservice®
Motorcycle Service Tools







ATTREZZO SEPARATORE CARTER MOTORE
Adatto alla maggior parte dei motori a due e quattro tempi con carter a suddivisione verticale.
I braccetti mobili consentono di operare con diverse configurazioni di viti.
Completo di viti di montaggio, perno di trazione centrale e telaio a tre bracci.

CRANK CASE SEPARATOR TOOL SET
Suits most two and four stroke engines that have a vertically split crankcase. Moveable fingers allow for a multitude of bolt patterns.
Includes mounting bolts, pulling center bolt and three leg frame.

267005310	BS2300		



ATTREZZO ESTRAZIONE CUSCINETTI
Ideale per diversi interventi di estrazione cuscinetti.
Include separatore da 2" e 3" per una capacità di intervento da 30 mm a 75 mm, una piastra forgiata e una vite di spinta da 180 mm.
I tiranti principali possono estendersi fino a max. 170 mm e 220 mm.

MECHANICAL BEARING PULLER SET
Suits a wide range of bearing extracting jobs. Includes 2" and 3" bearing splitter for pulling capacity from 30 mm-75 mm, one forged yoke and 180 mm trust bolt. Main rods extends long reach ability in maximum 170 mm and 220 mm.

267005550	BS4017		







ATTREZZO MONTAGGIO FASCE PISTONI
Per il montaggio di fasce pistoni da 35 mm a 111 mm (da 1-3/8" a 4-3/8"). La pinza si può usare tangenzialmente o perpendicolarmente al blocco cilindro, essendo concepita per utilizzo con diverse angolazioni.
L'impugnatura a cricchetto consente di tenere in posizione l'anello di compressione per un montaggio agevole delle fasce dei pistoni.

PISTON RING COMPRESSOR SET
Installs piston rings from 35 mm~111 mm (1-3/8" ~ 4-3/8").
Pliers can be used parallel or perpendicular to the cylinder block, an all angles operation designed pliers.
Ratcheting function handle holds the compressing rings in position for easy installation of piston rings.

267005150	BS3032		





ATTREZZO CONTROLLO PERDITE IMPIANTI RAFFREDDAMENTO / RADIATORI
Pompa manuale per aumentare e misurare la pressione per individuare eventuali perdite negli impianti di raffreddamento e nei radiatori.
La valvola a pulsante consente il rilascio della pressione in tutta sicurezza al termine della verifica.

COOLING SYSTEM & RADIATOR PRESSURE TEST
Hand operated pump increase and displays pressure to locate leaks in cooling and radiator systems.
Push-button valve safely relieves pressure when testing is completed.

267005230	BS0244		











SET 8 ATTREZZI SMONTAGGIO / MONTAGGIO FILTRI OLIO
Il set di attrezzi per lo smontaggio/montaggio filtri olio consente di rimuovere e installare facilmente tutti i tipi di filtro anche quando si trovano in posizioni difficilmente accessibili.
Può operare fino a una coppia di serraggio di 12 Kgm.
La particolare forma a tazza esercita una presa ideale riducendo al minimo la possibilità di rottura del filtro. Utilizzare utensili con attacco quadro da 3/8" e chiave esagonale da 19 mm.
Verniciatura anodica nera anticorrosione.

8 PC OIL FILTER WRENCH SET
The oil filter cap wrench set allows easy removal and installation, even in tight locations of motorcycle. It can withstand up to 12 kgm of torque.
Cup type design grips like socket thus minimizing the possibility of crushing filters.
Use 3/8" square driver with 19 mm hex driver tools.
Coated with dust-proof electro-black oxide.

267005280	BS6659		







ATTREZZO UNIVERSALE PER SMONTAGGIO FILTRI OLIO A CARTUCCIA
Consente di smontare facilmente i filtri olio a cartuccia anche in punti difficilmente accessibili. I supporti con rivestimento vinilico riducono la possibilità di danneggiare il filtro. Adatto per filtri di diametro 63 mm - 99 mm (2 1/2"-3 7/8").
Inserto quadro da 3/8".

UNIVERSAL 3 LEG OIL FILTER WRENCH (63~99 MM)
Allows easy removal of cartridge style oil filters even in tight locations.
Vino dipped legs minimize filter damage.
Suits filters with 63 mm-99 mm (2 1/2"-3 7/8") diameter.
3/8" Sq. Dr.

267005300	BS6656		







VASCA 4 LITRI DRENAGGIO / TRASPORTO OLIO ESAUSTO
Tappo a vite per massima praticità di riempimento e svuotamento. L'allentamento delle viti laterali è utile nelle operazioni di cambio olio. Sicurezza di trasporto e stoccaggio, senza fuoriuscite.
Realizzato in PE rinforzato resistente agli urti fino a 50 kg.

4L PORTABLE OIL DRAIN CAN
Screw cap for an easy fill and empty.
Loosening the side screws assists in the oil-changing process.
Ensures safe transportation and storage without spillage.
Durable reinforced PE material resistant to 50 kg impact.

267005290	BS8006		





SPESSIMETRO MISURE METRICHE / POLLICI
Gamma misure metriche: 0,05 / 0,08 / 0,10 / 0,15 / 0,20 / 0,25 / 0,30 / 0,38.
Gamma misure in pollici: 0,0015" / 0,002" / 0,003" / 0,004" / 0,006" / 0,008" / 0,0100" / 0,012" / 0,015" / 0,025".

BLADE FEELER GAUGE
Metric size range: 0.05 / 0.08 / 0.10 / 0.15 / 0.20 / 0.25 / 0.30 / 0.38.
SAE Size range: 0.0015" / 0.002" / 0.003" / 0.004" / 0.006" / 0.008" / 0.0100" / 0.012" / 0.015" / 0.025".

267005160	BS3105		





ATTREZZO REGOLAZIONE VALVOLE
Include chiavi di 3 misure: 8 mm, 9 mm, 10 mm.
Include 3 adattatori: tipo a vite e con inserto quadro da 3 mm e 4 mm.
Adattatori e chiavi intercambiabili per nove diverse combinazioni.
Idoneo alla regolazione di valvole sulla maggior parte dei motocicli e quad.

TAPPET ADJUSTING TOOL
Includes 3 size wrenches: 8 mm, 9 mm, 10 mm.
Includes 3 adjusters: at screw type, 3 mm and 4 mm square type.
Replaceable adjusters and wrenches for nine different combinations.
Fits most motorcycles and ATVs tappet adjusting.

A	**267005090**	BS2201A	3 mm Quadrato | *Square*	
B	**267005100**	BS2201B	4 mm Quadrato | *Square*	
C	**267005110**	BS2201C	8 mm Esagono | *Hex*	
D	**267005120**	BS2201D	9 mm Esagono | *Hex*	
E	**267005130**	BS2201E	10 mm Esagono | *Hex*	
F	**267005140**	BS2201F	Vite testa piatta | *Flat Screw*	







ATTREZZO SMONTAGGIO SEMICONI VALVOLE
Per rimuovere i semiconi valvole nei motori a 4 tempi.
Mantiene in posizione i semiconi durante la sostituzione.
Adatto per la maggior parte dei motori a 4 tempi.

VALVE SPRING COLLET REMOVE/REPLACE TOOL
Removes valve spring split collets in 4 stroke engines.
Holds valve spring collets in position during replacement.
Suits most 4 stroke motorcycle engines.

A	**267005170**	BS9828		
B	**267005180**	BS9829		



SET PROFESSIONALE PER APERTURA/ CHIUSURA CATENE DISTRIBUZIONE
Con la semplice rotazione della chiave a T e l'apposita spina consente l'apertura semplice e rapida della catena di distribuzione per interventi di riparazione. Design pulito e compatto per la massima praticità d'uso. Adatto per diverse tipologie di maglie: 2x3 / 3x4 / 4x5. Spina realizzata in materiale SUJ2.

TIMING CHAIN BREAKING/RIVETING TOOL KIT
With the rotation of the T-bar and appropriate Push Pin, it provides a simplest way to break timing chain and repair it.
Simple design, small volume for an easy use.
Suits Chain Plate quantity: 2x3 / 3x4 / 4x5.
Press Pin is material in SUJ2.

267005580	BS3550		

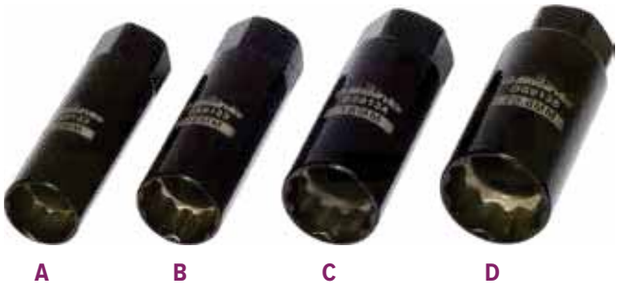

A B C D



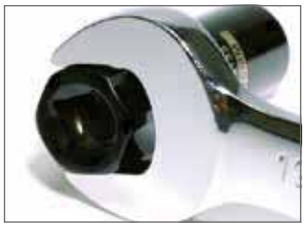

BUSSOLA CANDELA EXTRASOTTILE
In acciaio al cromo vanadio temperato con inserto integrato in gomma per trattenere la candela durante il montaggio; attacco quadro 3/8" ed esagonale. Bussole a doppio esagono extrasottili per facilitare l'accesso agli stretti alloggiamenti delle candele.

EXTRA THIN WALL SPARK SOCKET
3/8" Sq Dr. and Hex Dr. Hardened chrome vanadium steel with inbuilt rubber insert to hold plug during installation.
Extra thin wall bi-hex sockets designed to access narrow spark plug holes.

A	**267005050**	BS9132	14 mm	
B	**267005060**	BS9133	16 mm	
C	**267005070**	BS9134	18 mm	
D	**267005080**	BS9135	20.8 mm	





ATTREZZO MONTAGGIO / SMONTAGGIO SONDA LAMBDA
Attrezzo per il montaggio o smontaggio della sonda lambda esagonale da 22 mm (7/8") e 11/16" su tutti i modelli a iniezione, attacco quadro 3/8".

OXYGEN SENSOR SOCKET TOOL
This tool is used to remove or install the 22 mm (7/8") and 11/16" hex oxygen sensor on all fuel injected models 3/8" Sq. Dr.

267005460	BS4224	11/16"	
267005470	BS4224C	22 mm	



ESTRATTORE VOLANO
Estrattore filettato per volani. Punta con sfera in lega di acciaio al cromo per ridurre lo stress da attrito durante l'uso.

MAGNETIC FLYWHEEL PULLER
Thread puller designed for magneto flywheels.
Chrome alloy steel ball tip on shaft to reduce friction stress during use.

A	**267005320**	BS2405	M22 x 1.5 mm	
B	**267005330**	BS2441	M19 x 1.0 mm	
C	**267005340**	BS2442	M24 x 1.0 mm	
D	**267005350**	BS2443	M27 x 1.0 mm	
E	**267005360**	BS2444	M27 x 1.25 mm	
F	**267005370**	BS2470	M26 x 1.0 mm	
G	**267005380**	BS2472	M28 x 1.0 mm	
H	**267005390**	BS2473	M30 x 1.5 mm	
I	**267005400**	BS2477	M22 x 1.5 mm	
L	**267005410**	BS2479	M26 x 1.5 mm	
M	**267005420**	BS2487	M35 x 1.0 mm	

Altre misure disponibili a pag. 1573 | *New measures see page 1573*



ATTREZZO PER MODIFICARE/ ADATTARE
Diametro Tubi Scarico
Attrezzo per l'espansione interna per aumentare il diametro di tutte le tipologie di tubi di scarico, manovra a chiave.
Barra esagonale extra lunga per una maggiore praticità.

EXHAUST PIPE EXPANDER
Internal expanding designed tool operates with wrench to expand all exhaust pipe.
Extra long hex rod for better handling.

A	**267005480**	BS6101	29~44 mm	
B	**267005490**	BS6103	38~64 mm	



ATTREZZO SMONTAGGIO MOLLE
Impianto Di Scarico
Per lo smontaggio delle molle dell'impianto di scarico, le molle del cavalletto laterale e altri componenti.

EXHAUST SPRINGS U HOOK HANDLE
Used to remove exhaust pipe springs, side stand springs and other parts.

267005950	BS5201		





ATTREZZO MONTAGGIO / SMONTAGGIO PRIGIONIERI
Agevola lo smontaggio e il montaggio dei prigionieri senza danneggiare il filetto. Adatto alle più comuni filettature.

STUD REMOVE AND INSTALL TOOL
Easily removes and installs studs without damaging threads.
Suitable for most popular stud thread sizes.

A	**267005190**	BS2311	M6 x P1.0	
B	**267005200**	BS2312	M8 x P1.25	
C	**267005210**	BS2313	M10 x P1.25	
D	**267005220**	BS2314	M10 x P1.5	







ATTREZZO UNIVERSALE
Per Montaggio / Smontaggio Prigionieri
Assicura una presa ottimale sui prigionieri con filetto ruggine, agevolandone lo smontaggio e la sostituzione.

UNIVERSAL STUD SETTER AND EXTRACTOR
Powerful grip for stud with rusted threads, or for setting new ones.

267005430	BS4328		

ATTREZZI MANUTENZIONE TRASMISSIONE FINALE

TRANSMISSION TOOLS

TRASMISSIONE | *TRANSMISSION*

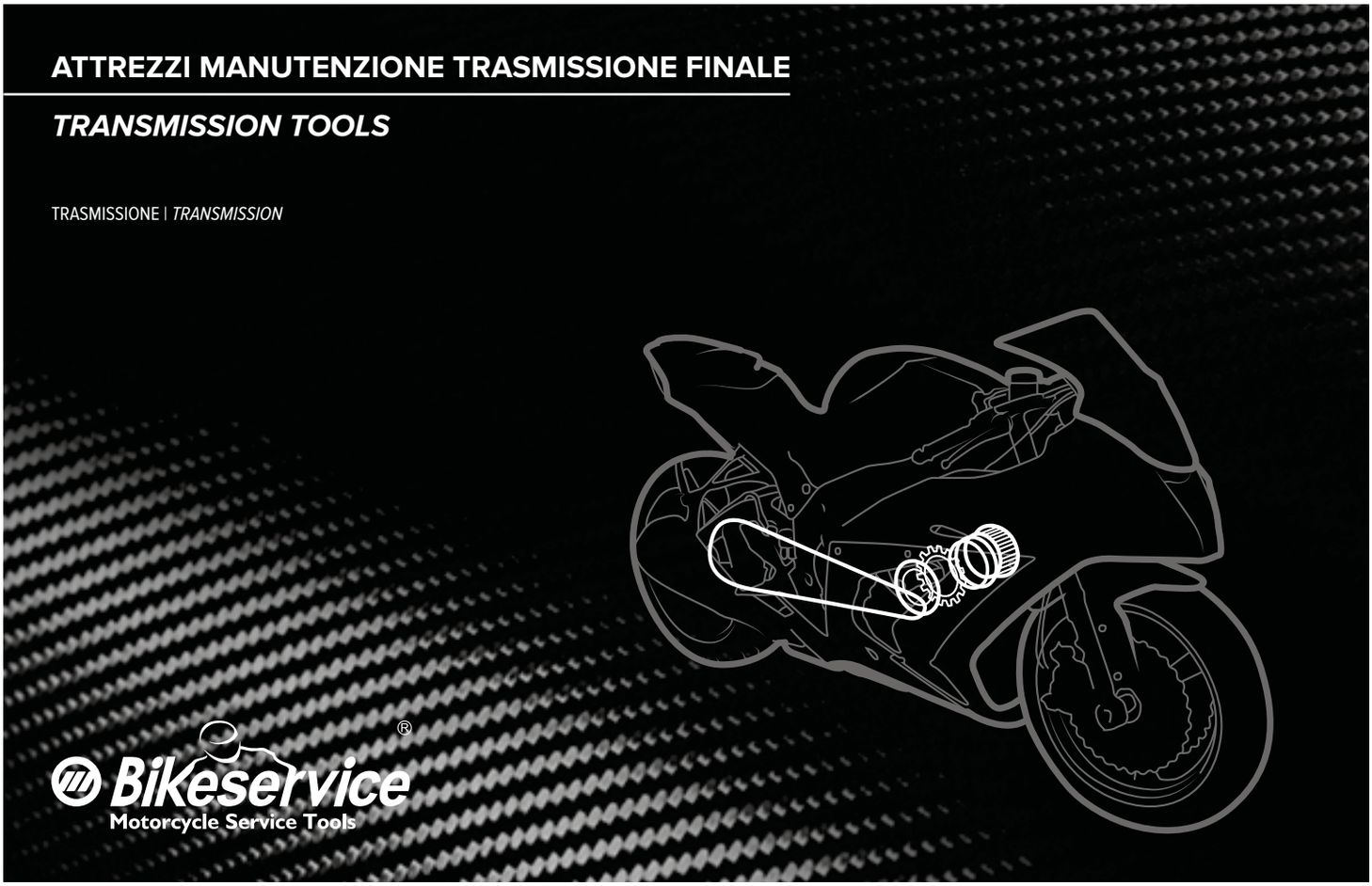







CHIAVE PER SMONTAGGIO FRIZIONE VARIATORE
Per lo smontaggio e la sostituzione del dado campana frizione su scooter.

CLUTCH NUT WRENCH
For removing and replacing the clutch bell nut on scooter.

A	**267005510**	BS9861	34 mm	
B	**267005520**	BS9862	39 mm	
C	**267005530**	BS9863	41 mm	
D	**267005540**	BS9864	46 mm	





ATTREZZO BLOCCAGGIO CAMPANA FRIZIONE VARIATORE
Impugnatura fucinata con fascia in pelle molto resistente.
La fascia si stringe intorno alla puleggia all'aumentare della forza applicata. Per diametri da: 25 mm a 160 mm.

HEAVY DUTY PULLEY HOLDER WRENCH
Drop forged handle with heavy duty leather strap.
The strap tightens around the pulley as more effort is applied.
Diameter: 25 mm~160 mm.

267005500	BS6728		







ATTREZZO PER CONTROLLO TENSIONE CINGHIA TRASMISSIONE
Design compatto con scala di misura per facilitare la lettura.
Compatibile per tutti i modelli di cinghie di trasmissione.

BELT TENSION GAUGE
Compact design with graduated scale for easy reference.
Designed to work with all belt drive models.

267005590	BS4532		



SET PROFESSIONALE PER APERTURA/CHIUSURA CATENE TRASMISSIONE
Il set professionale universale per la riparazione delle catene di trasmissione è ideale per l'apertura di catene di misura fino a 632 esercitando pressione sui perni forati e sulle piastre della falsa maglia di catene.
Attrezzo per utilizzo manuale (serraggio a mano) con chiave a T o con l'inserto quadro 3/8" e 19 mm con chiave 21 mm.
Spina realizzata in materiale SUJ2.

UNIVERSAL TRANSMISSION CHAIN REPAIRING MASTER SET
Universal Chain Repairing Master Set is designed to break chains up to chain size #632 and press the hollow link pins and plates of the Master Link.
The Tool is designed for hand use (tightened by hand) utilizing the T-Bar or 3/8" Square and 19mm with 21 mm spanner.
Push Pin is material in SUJ2.

267005600	BS35101		

ATTREZZI MANUTENZIONE TELAIO

FRAME SERVICE TOOLS

TELAIO | *FRAME*

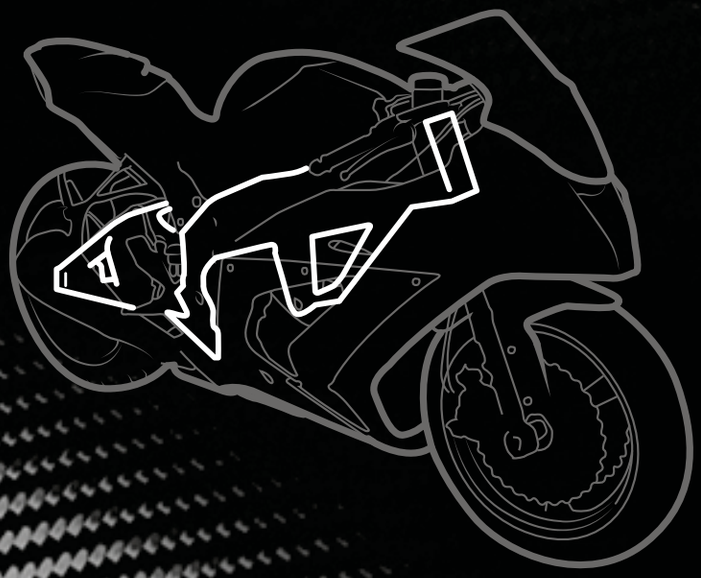

Bikeservice®
Motorcycle Service Tools





SET 17 PEZZI PER INSTALLAZIONE / RIMOZIONE CUSCINETTI
Per lo smontaggio e l'installazione di cuscinetti su motocicli, automobili, camion, trattori, macchine per movimento terra, motori elettrici e molte altre applicazioni. Comprende 3 impugnature di manovra in una valigetta metallica e 14 adattatori per cuscinetti da 10 mm - 42 mm.

17 PCS BUSHING DRIVER SET (METRIC)
Removes and installs bushes on motorcycles, cars, trucks, tractors, construction equipment, electric motors and many other applications.
Includes 3 drive handles in metal storage case and 14 adapters from 10 mm - 42 mm bushing drivers for 14 pcs.

267005560	BS9144		

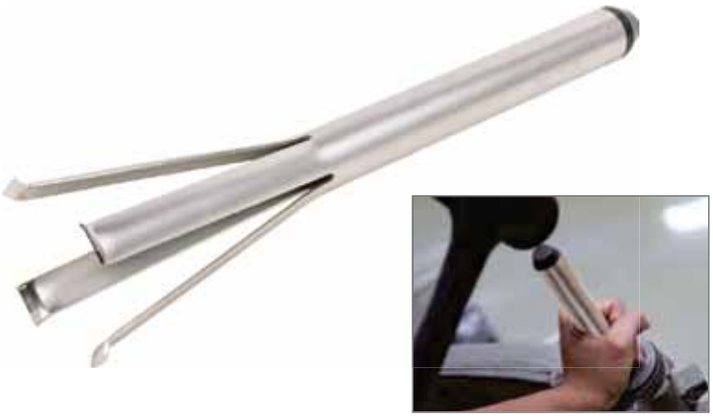

ATTREZZO ESTRAZIONE CUSCINETTI STERZO
Evita il danneggiamento del cannotto grazie al semplice smontaggio della pista esterna.
4 punti di contatto assicurano una presa uniforme. Adatto per cannotti di sterzo Ø 39 mm - Ø 57 mm (1½-2 3/16").
Lunghezza: 320 mm (12½").
Rimuovere le protezioni in plastica prima dell'uso.

STEERING BEARING REMOVE TOOL
Avoiding tube damage with easy outer race removal.
4 contact points ensures even race removal.
Suits tube Ø 39 mm - Ø 57 mm (1½-2 3/16").
Length: 320 mm (12½").
Remove plastic protection ears before using.

267005570	BS4201

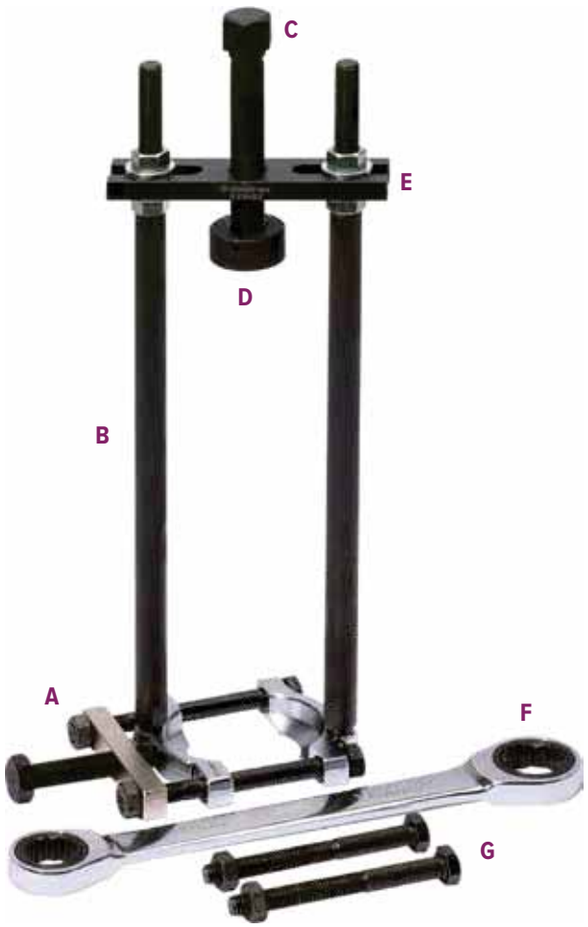





ESTRATTORE CUSCINETTO PIASTRA INFERIORE STERZO
Attrezzo per smontare il cuscinetto conico dalla piastra inferiore di sterzo.
L'estrattore è dotato di un'apertura molto sottile per operare tra la piastra e il cuscinetto.
Grazie all'asta estensibile è adatto a diverse misure di perno sterzo.

STEERING/ LOWER TRIPLE CLAMP BEARING PULLER
Use this tool to remove the lower fork stem (separator) tapered bearing.
Tapered fork stem bearing remover features extra thin opening for slot entry between stem and bearing. Rod extension can be used on multiple sizes of fork stems.

267005890	BS9892

A Ø30~56 mm
Separatore cuscinetti / *Bearing separato*

B 2pc (L) 240~320 mm
Asta estensibile / *Extension bar*

C (L) 100 mm
Vite di spinta / *Forcing screw*

D Ø28 mm
Testa spintore girevole / *Rotating pusher head*

E 45~100 mm
Traversa / *Beam*

F 17 mm and 19 mm
Chiave a cricchetto / *Ratchet wench*

G M8 x (L) 75 mm
Vite e dado separatore / *Separator bolt and nut*





ATTREZZO MONTAGGIO CUSCINETTO
PIASTRA INFERIORE STERZO
L'adattatore in materiale plastico consente il montaggio semplice e sicuro del cuscinetto della piastra inferiore. Basta scegliere l'adattatore idoneo, infilare l'inserto di regolazione sul cannotto di sterzo e posizionare il cuscinetto con l'ausilio di un martello o pressa, evitando qualsiasi rischio di danneggiamento. Misure adattatori: 24, 26, 27, 28, 30 mm.





STEERING / LOWER TRIPLE CLAMP BEARING
INSTALLER TOOL SET
The P.O.M. adaptor offers a new, safe approach to lower bearing installation.
Simply choose the correct adaptor, slide the setting driver over the steering tube and tap the bearing into place with hammer or press, avoiding any risk of damage.
Adaptor sizes: 24, 26, 27, 28, 30 mm.

267005900	BS9893		



ATTREZZO SMONTAGGIO / MONTAGGIO
PERNO RUOTA ANTERIORE
Idoneo per lo smontaggio della maggior parte dei perni della ruota anteriore.
4 misure in un unico attrezzo: 17, 19, 22, 24 mm (esagono 6 punti).
Attacco quadro 3/8", coppia max 12 Kgm.





FRONT WHEEL SPLINDLE REMOVE TOOL
Designed to fit most spindles during front wheel removal.
4 sizes in 1 tool which covers sizes 17, 19, 22, 24 mm (Hex 6 Point).
3/8" Sq.Dr., for maximum 12 Kgm torque.

267006000	BS5530		









CHIAVE A SETTORE REGOLABILE
Acciaio temperato al cromo vanadio.
Speciali chiavi a C temperate ideali per l'utilizzo con ghiere di tenuta scanalate. L'estremità ad uncino, sottile solo 4 mm, consente l'accesso anche alle zone più difficili dello sterzo e delle sospensioni.

ADJUSTABLE C HOOK WRENCH
Chrome vanadium hardened steel.
Tempered C-hook wrenches are specially designed for using with slotted retaining rings.
4 mm thin hook allows to access to narrow areas in motorcycle steering and suspension.

A	**267005610**	BS0350	19-51 mm	
B	**267005620**	BS0351	32-76 mm	
C	**267005630**	BS0352	51-120 mm	





ATTREZZO PER LUBRIFICAZIONE INTERNA CAVI GAS-FRENO-FRIZIONE
Per la corretta lubrificazione dei cavi gas, freno e frizione.
Si applica all'estremità della guaina, iniettando direttamente dalla bomboletta il lubrificante.

CABLE WIRE LUBRICATION TOOL
Injects lubricant into cable housing directly from lubricant aerosol bottle.
Designed to lubricate throttle, brake and clutch cables.

267005030	BS4531			

ATTREZZI MANUTENZIONE IMPIANTI FRENANTI

BRAKE SYSTEM SERVICE TOOLS

FRENI | *BRAKES*

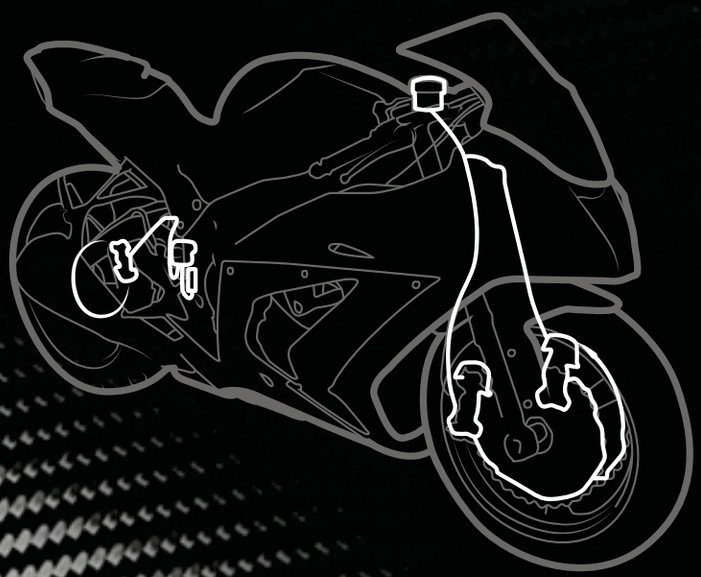

Bikeservice®
Motorcycle Service Tools









POMPA PER DISAERAZIONE IMPIANTO FRENANTE
Attrezzo per la disaerazione degli impianti frenanti e frizioni idrauliche.
Fornito completo di connettori in tre misure e diversi adattatori.
Corpo in alluminio pressofuso completo di manometro e kit accessori.
Facile da smontare per le operazioni di pulizia.
Fornito in una valigetta di metallo.

VACUUM PUMP AND BRAKE BLEEDER KIT
Tool for bleeding operation in brake systema and idraulic clutch
Supplied complete with three connector sizes and various adaptors.
Die cast body with gauge and accessory kit.
Easily dismantled for cleaning.
Supplied in metal case.

267005960	BS5582		





ATTREZZO SMONTAGGIO MOLLE FRENO
Realizzato in lega di acciaio trattato termicamente, studiato specificamente per lo smontaggio e l'installazione delle molle dei freni, solitamente difficili da raggiungere.
Lunghezza: 150 mm (6"), con chiave a T di largh. 75 mm (3").

HEADLIGHT AND BRAKE SPRING HOOK
Made from heat treated alloy steel, specially designed for removing and installing brake springs.
Length: 150 mm (6"), with a 75 mm (3") wide T-handle.

267005930	BS0044		





TESTER DIGITALE PER FLUIDO IMPIANTI FRENANTI
Infilare l'asta del tastatore per pulire i due elettrodi sulla testa dell'astina di prova.
Immergere la testa dell'astina di prova nel nuovo fluido frenante per circa 20 mm.
Premere il tasto test.
Con un cacciavite Phillips regolare la vite di reset.
Ruotare fino a quando la spia verde di reset lampeggia (a sinistra).

BRAKE FLUID CONDITION TESTER
Twist down the test probe bar to clean the two electrodes on the test bar head.
Immerse the test bar head into new brake fluid approximately 20 mm.
Press the test button.
Use a Phillips screwdriver to adjust the reset screw.
Turn until the green reset indicator (far left) ashes.

267005940	BS0245		







ATTREZZO PER ALLARGARE PISTONI PINZA FRENO
Allarga i pistoni delle pinze freno per agevolare la sostituzione delle pastiglie.

CALIPER PISTONS SPREADER
Widens caliper pistons for easy pad replacement.

A	**267005970**	BS9870	30 mm	
B	**267005980**	BS9871	70 mm	

ATTREZZI MANUTENZIONE FORCELLA

FRONT FORK SERVICE TOOLS

FORCELLA | *FORK*

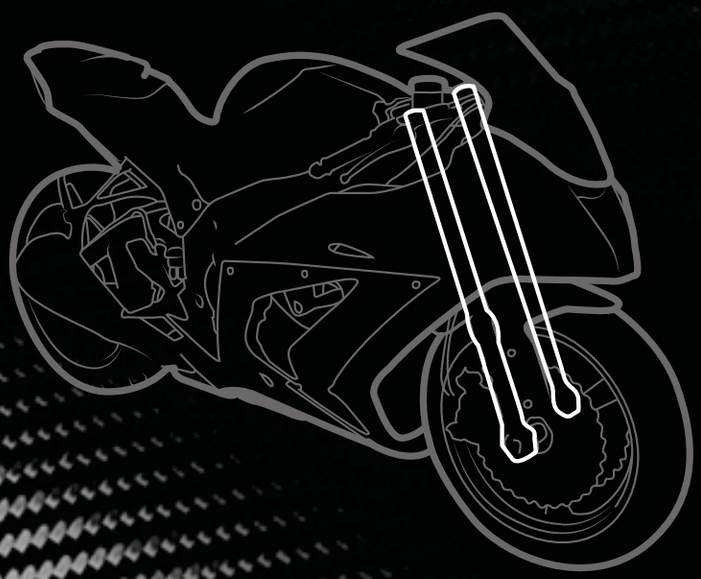

Bikeservice®
Motorcycle Service Tools



ATTREZZO INSERIMENTO/ VERIFICA
Livello Olio Forcella
Per controllare e regolare il livello dell'olio su tutte le forcelle.
L'anello regolabile consente la lettura del livello dell'olio da 0 a 300 mm con passi da 0,5 cm.
La siringa ha una capacità di 60 ml.
Può essere utilizzato su biciclette dotate di sospensione anteriore.

FORK OIL LEVEL GAUGE TOOL
For checking and adjusting the oil level on all forks.
Adjustable ring will measure oil levels from 0 to 300 mm in 0.5 cm increments.
The syringe has a capacity of 60 ml.
Can be used on bicycles equipped with front suspension.

267005920	BS41500		





BUSSOLA ½" CHIAVE MASCHIO
Bussole chiave maschio con diverse tipologie di inserti per svariati modelli e misure di forcella.
Attacco quadro 1/2".

½" BIT SOCKET
Bit sockets with different screw standard for various designs and sizes of the front forks.
1/2" Sq.Dr.

267005650	BS9730B	10 mm	
267005670	BS9730C	12 mm	











ATTREZZO MONTAGGIO PARAOLI FORCELLA
Consente l'installazione facile e precisa dei paraoli della forcella.
Ampia gamma di inserti per garantire la compatibilità con la maggior parte delle forcelle (21 diverse misure).

FRONT FORK OIL SEAL DRIVER
Allows an easy installation of fornt fork oil seals.
Full range of driver sizes to suit most of forks (21 sizes).

267005820	BS9827Q	27 mm
267005830	BS9827R	30 mm
267005840	BS9827S	31 mm
267005680	BS9827A	32 mm
267005690	BS9827B	33 mm
267005850	BS9827T	34 mm
267005700	BS9827C	35 mm
267005710	BS9827D	36 mm
267005720	BS9827E	37 mm
267005730	BS9827F	38 mm
267005740	BS9827G	39 mm

267005750	BS9827H	40 mm
267005760	BS9827J	41 mm
267005860	BS9827U	42 mm
267005770	BS9827K	43 mm
267005780	BS9827L	45 mm
267005790	BS9827M	46 mm
267005870	BS9827V	47 mm
267005800	BS9827N	48 mm
267005880	BS9827W	49 mm
267005810	BS9827P	50 mm

ATTREZZI PER PNEUMATICI

TIRE SERVICE TOOLS

PNEUMATICI | *TIRE*

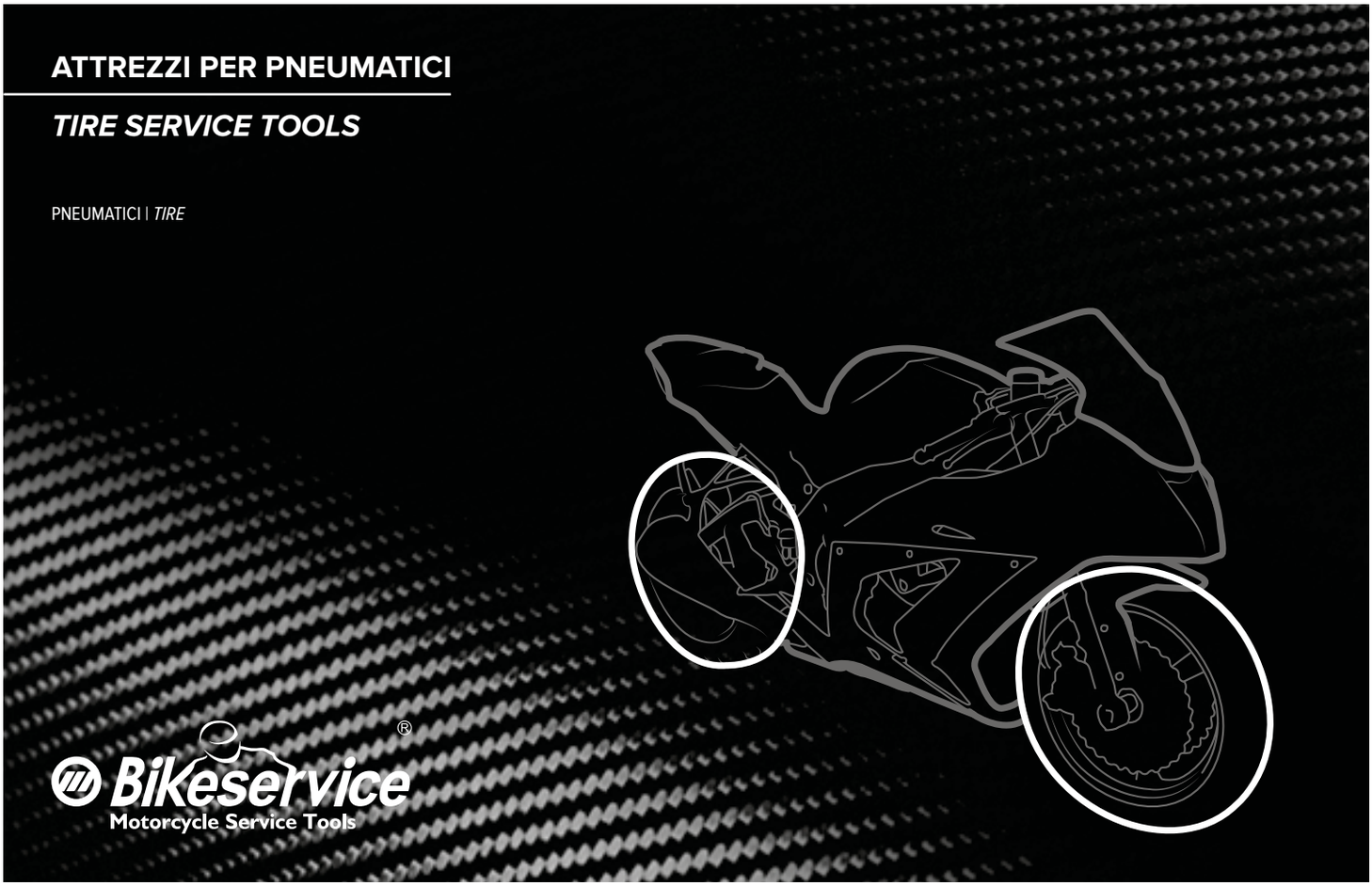



LEVA SMONTAGOMME
Lega di acciaio forgiato e temperato.
Ideale per lo smontaggio degli pneumatici moto.

TIRES LEVER
Drop forged and tempered alloy steel.
Designed for motorcycle tires removal.

A	**267006040**	BS5603	L 200 mm	
B	**267006050**	BS5604	L 400 mm	
C	**267006060**	BS5612	Curva / *Curved*	









SET 3 PEZZI PROTEZIONE CERCHI
Per Smontaggio Pneumatici
Protegge il cerchio da eventuali danni durante lo smontaggio del pneumatico.
Lunghezza totale 150 mm.

3 PC RIMS PROTECTOR SET
Protects wheel rims from damage during tyre removal.
Overall length 150 mm.

267006010	BS9952		





MANOMETRO DIGITALE PRESSIONE PNEUMATICI
Ugello angolare adatto a tutte le tipologie di valvole dei motocicli.
Taratura in bar, kPa e PSI con la semplice pressione di un tasto per cambiare l'unità di misura.
Funzionamento con una mano sola, lettura accurata su display LCD.
Auto Power o basso consumo.
Campo di misurazione 2-100 PSI (0,15-7,00 bar).
Risoluzione 0,5 PSI (0,05 bar o 5 kPa).
Precisione +1% +0,5 PSI.
Temperatura d'esercizio 10°C-30°C/50°F-86°F.
Alimentazione con batteria al litio 3V.

DIGITAL TIRE PRESSURE GAUGE
Angled nozzle fits all types of motorcycle valves.
Calibration in bar, kPa and PSI at the push of a button for unit change.
One hand operation, accurate digital LCD reading.
Auto Power o, low power consumption.
Measuring range 2-100 PSI (0.15-7.00 bar).
Resolution 0.5 PSI (0.05 bar or 5 kPa).
Accuracy +1% +0.5 PSI.
Operating temperature 10°C-30°C/50°F-86°F.
Power 3V Lithium battery.

267006020	BS3238		







ATTREZZO MONTAGGIO / SMONTAGGIO VALVOLE PNEUMATICI TUBELESS
La barra in acciaio con manicotto mobile in gomma offre la leva ideale per lo smontaggio delle valvole tubeless.
Evita il danneggiamento dei cerchi in lega.

TIRE VALVES EXTRACTOR BAR
Steel bar with movable rubber sleeve offers maximum leverage during removal of snap-in valves.
Prevents damage to alloy wheels.

267006030	BS3699		

ATTREZZI GENERICI

HAND TOOLS

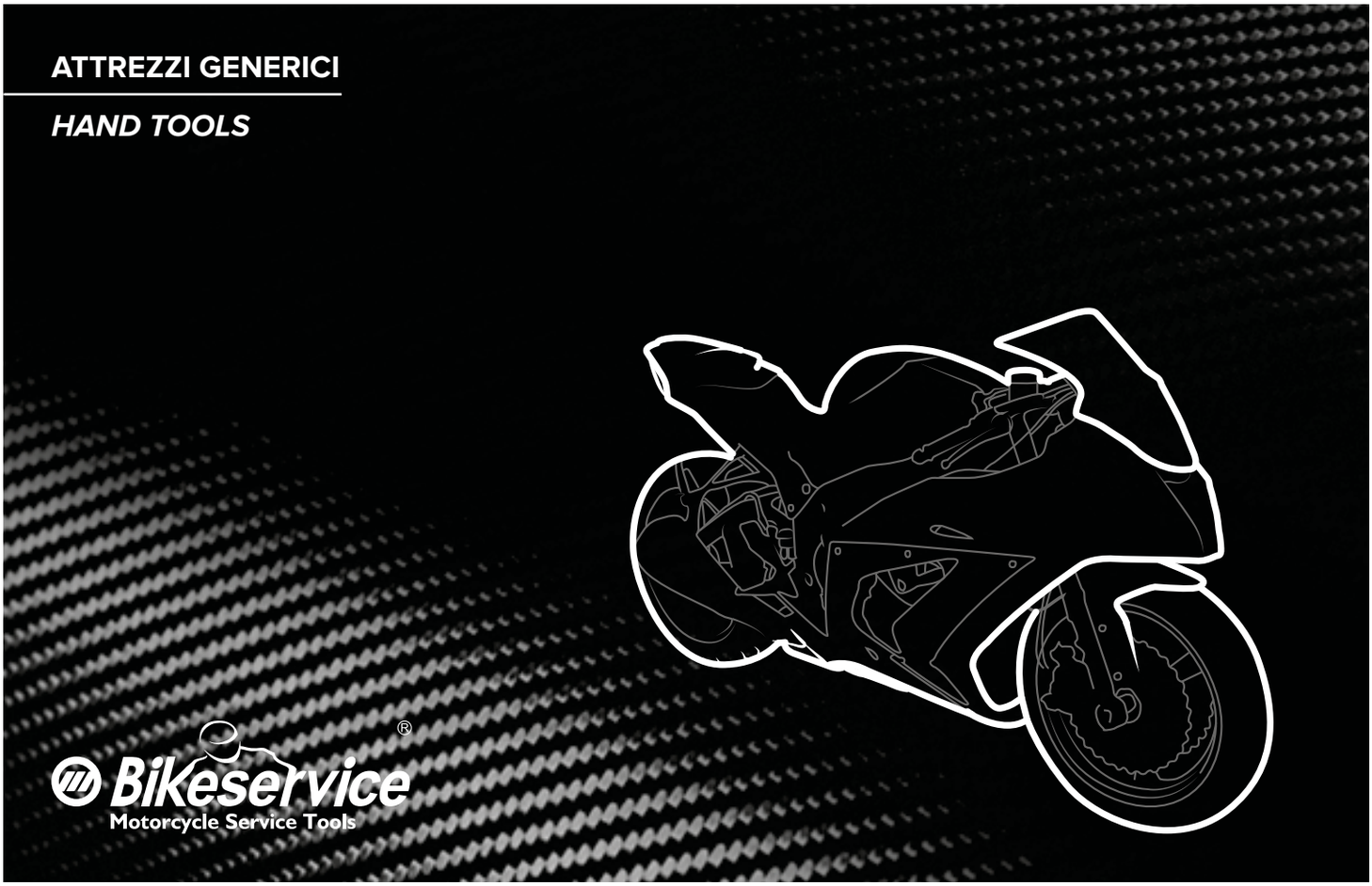





SET 8 PZ. CHIAVI 6-19 MM COMBINATE
Adatte a dadi misura metrica e SAE da 6pt, 12pt, torx, quadrati.

8PC (6-19 MM) MULTI DRIVER WRENCH SET
Fits Metric and SAE 6pt, 12pt, TX-Star, Square.

267006130	BS6012		

Disponibili anche singolarmente a pag. 1573 | *Also available single pieces page 1573*





SET CHIAVI COMBINATA A CRICCHETTO 6-19 MM
Interamente cromata lucida.
Serie brevettata di chiavi a cricchetto combinate con estremità ad anello. L'impugnatura sottile in lega di acciaio forgiato offre prestazioni ottimali negli interventi di riparazione.

RATCHET WRENCH SET 6-19 MM
Fully polished chrome plated.
Patented ratcheting ring end combination wrenches.
Forged alloy steel thin provides high performance in repairing jobs.

267006260	BS7407		

Disponibili anche singolarmente a pag. 1573 | *Also available single pieces page 1573*



B

A



CRICCHETTO REVERSIBILE
Cricchetto reversibile, a sgancio rapido, 72 denti con rivestimento heavy duty. L'impugnatura robusta e resistente offre anche caratteristiche di isolamento dal calore.
Specificamente concepito per lavorare sulle moto senza danneggiare le superfici.

RATCHET HANDLE
Reversable and quick release ratchet with 72 teeth covered with heavy duty coating.
Strong and durable handle provides heat insulation features.
Designed for specific motorcycle work without damage to bike surfaces.

A	**267006220**	BS7288	1/4"	
B	**267006230**	BS7291	1/2"	





CHIAVE DINAMOMETRICA DIGITALE
Disponibile con innesto quadro 1/4", 1/2".
Cricchetto a 72 denti.
Display LED con visualizzazione in Nm, ft.Lbs, in.Lbs, kgm, kg-cm.
Segnale acustico (clic) al raggiungimento della coppia di serraggio.
Funzionamento a batteria CR 2032 (3 volt).
Involucro resistente agli urti e agli oli.
Spegnimento automatico dopo 2 minuti.
Completo di certificato di taratura.

DIGITAL READING TORQUE WRENCH
Available in 1/4", 1/2" Sq. Dr.
72 teeth ratchet.
LED displays in Nm, ft.Lbs, in.Lbs, kgm, kg-cm.
Click sounds as torque achieved.
Battery operated use CR 2032 (3volt).
Oil resistant impact resistant casing.
Automatic power off after 2 minutes.
Calibration certificate supplied.

A	**267006240**	BS5421	1/4"	
B	**267006250**	BS5423	1/2"	





SET 2 PZ. CHIAVI A CRICCHETTO 4 IN 1
Chiave a cricchetto reversibile a doppia estremità, comprende 4 misure in un unico attrezzo.

2 PC "4 IN 1" REVERSIBLE RATCHET WRENCH SET
Reversible type dual end ratchet wrench, includes four sizes in one tool.

267006150	BS7525		





CRICCHETTO REVERSIBILE 1/2" CON PROLUNGA (DA 340 A 500 MM)
Cricchetto a 36 denti con resistente impugnatura allungabile, lunghezza da 34 cm a 50 cm.

1/2" DRIVE F HANDLE TELESCOPING RATCHET (340 - 500 MM)
36 tooth ratchet with durable and extensible handle length 34 cm to 50 cm.

267006080	BS5420		





SET CHIAVI ESAGONALI A T L 300 MM
Bussola e asta in acciaio forgiato al cromo vanadio con finitura cromata trattata termicamente. Impugnatura in acciaio al carbonio.
Lunghezza: 300 mm.

300 MM LONG T-HANDLE SOCKET
Drop forged chrome vanadium steel socket and shaft with heat treated and chrome plated finish. Handle is carbon-steel.
Length: 300 mm.

267006070	BS1660		

Disponibili anche singolarmente a pag. 1573 | *Also available single pieces page 1573*



SET BUSSOLE ESAGONALI
SQUARE DRIVE BITS SOCKET SET

A	**267006200**	BS9200	1/4”	
B	**267006210**	BS9202	1/2”	





PINZA CHIUSURA TUBAZIONI IN GOMMA
Consente di risparmiare tempo in diversi interventi sul motore. L'anello di serraggio assicura una presa sicura in ogni posizione.
La speciale morsa raggiata evita danni ai componenti.

HOSE CLAMP PLIER
Helps save time in various engine jobs. The locking ring provides tight grip in any positions. Special radius jaw design prevents damage.

A **267005240**	BS9036		
B **267005250**	BS9037		
C **267005260**	BS9041		





SET 9 PEZZI CHIAVI TX LUNGHE CON CALAMITA
Interamente cromate lucide.
Misure Torx: T10, T15, T20, T25, T27, T30, T40, T45, T50
In acciaio al cromo vanadio, con potente magnete incorporato per trattenere le viti.

9 PCS EXTRA LONG TX-STAR KEY SET
Fully polished chrome plated.
Tx-star sizes: T10, T15, T20, T25, T27, T30, T40, T45, T50
Chrome vanadium steel made, build-in strong magnet to prevent screws dropping.

267006090	BS9101		

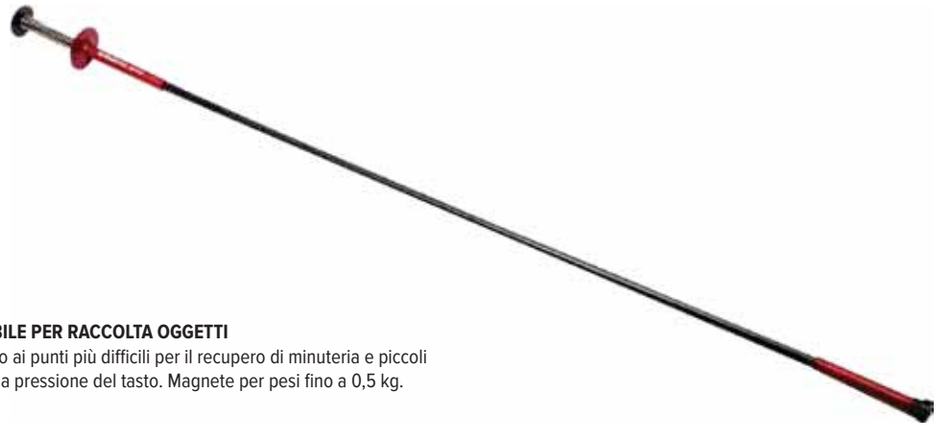

ATTREZZO MAGNETICO FLESSIBILE PER RACCOLTA OGGETTI
L'asta flessibile consente l'accesso ai punti più difficili per il recupero di minuteria e piccoli componenti. Artiglio apribile con la pressione del tasto. Magnete per pesi fino a 0,5 kg.
Lunghezza: 700 mm.
Massima apertura artiglio: 25 mm.

FLEXIBLE MAGNETIC CLAW PICK UP TOOL
The flexible spring shaft allows the tool to reach awkward areas to grab parts. Press the button to extend claw. Magnet loads weight up to 0,5 kg.
Length: 700 mm.
Claw maximum opening: 25 mm.

267006140	BS7030		



Tasto a pressione a molla
Spring Push Button



Morsa a molla con presa magnetica
Magnetic pick up and Spring Claw



Ideale per il recupero di viteria e minuteria
Grab the screws



SET 9 PEZZI CHIAVI ESAGONALI MASCHIO LUNGHE CON ESTREMITÀ A SFERA
Interamente cromate lucide.
Misure esagono: 1,5 - 2 - 2,5 - 3 - 4 - 5 - 6 - 8 - 10 mm.
In acciaio al cromo vanadio, con potente magnete incorporato per trattenere le viti.

9 PCS EXTRA LONG BALL POINT HEX
Fully polished chrome plated.
Hex sizes: 1.5, 2, 2.5, 3, 4, 5, 6, 8, 10 mm
Chrome vanadium steel made, build-in strong magnet to hold screws in position.

267006100	BS9103		





GIRAVITE FLESSIBILE CON INSERTI
L'asta flessibile consente l'accesso ai punti più difficili per lo smontaggio e il montaggio della maggior parte delle fascette stringitubo.

FLEXIBLE HOSE CLAMP NUT/ SCREW DRIVERS
Flexible shaft allows access to awkward locations for easy removal and installation of most hose clamps.

267005270	BS2008		



SET CACCIAVITE A PERCUSSIONE CON INSERTI
Per allentare dadi e bulloni ruggini o grippati.
Reversibile per la massima sicurezza nello smontaggio e nel serraggio.
4 inserti Phillips: PH1, PH2, PH3, PH4.
3 inserti piatti: 8 mm, 10 mm, 12 mm.

IMPACT DRIVER SET
Loosens rusted or seized nuts and bolts.
Reversible for secure tightening and removal.
4 Phillips bits: PH1, PH2, PH3, PH4.
3 Flat bits: 8 mm, 10 mm, 12 mm.

267006110	BS9651		







SET BUSSOLA ½" CHIAVE MASCHIO TX
Bussole chiave maschio TX con diverse tipologie di inserti .
Le bussole chiave maschio permettono un angolo di manovra fino a 30°, migliorando l'accessibilità a zone difficili e consentendo di raggiungere il dispositivo di fissaggio da posizioni angolate.
Attacco quadro 1/2".

3 PCS ½" TX-STAR BIT SOCKET SET
TX sockets with different screw standard for various designs and sizes of the front shock absorber.
Bit sockets allow a working angle up to 30°, provide improved access to hard-to-reach areas and allow angle access to the fastener.
1/2" Sq.Dr.

267005910	BS9731		

A Lunghezza asta: 152 mm (6").
Lunghezza complessiva: 241 mm (9-1/2").
L'asta extra lunga consente di raggiungere anche O-ring e paraoli posizionati in profondità.

Shaft length: 152 mm (6").
OAL.: 241 mm (9-1/2").
Extra long shaft reaches o-rings or seals set in deep areas.



B Lunghezza asta: 76 mm (3").
Lunghezza complessiva.: 162 mm (6-3/8").

Shaft length: 76 mm (3").
OAL.: 162 mm (6-3/8").





SET 4 ATTREZZI PER RIMOZIONE O-RING / PARAOLI
Ideale per lo smontaggio agevole di O-ring, perni scanalati, tenute e boccole su vari componenti meccanici.
Ogni attrezzo è realizzato in acciaio inox con un'impugnatura soft grip in plastica resistente.
Il set comprende attrezzi con puntale diritto, a uncino, curvo (45° e 90°).
Ideale per lavori di precisione e interventi di scalfitura e rimozione.

4 PCS PICK & HOOK SET
Designed for easy removal of O-rings, split pins, seals and bushes in various mechanical applications.
Each hook and pick is made of stainless steel with durable plastic soft grip handle.
Contains straight awl, hook tool, 45° and 90° bent picks.
Use for detail work and scribing, picking jobs.

A	**267005440**	BS0230		
B	**267005450**	BS1234		



Puntale a uncino
Hook pick



Puntale a 90°
90° angle pick



Puntale a 45°
45° combination pick



Puntale diritto
Straight pick / Awl





ATTREZZO PER RIMUOVERE O-RING PARAOLI 150 MM E 170 MM
Rimozione semplice e rapida di O-ring e paraoli.
La speciale testa dalla conformazione angolare consente maggiore facilità di accesso rispetto agli attrezzi tradizionali.
Lunghezza: 170 mm e 150 mm.

2 PCS SEAL PICK SET 150 MM AND 170 MM
Quick and easy removal of O-Ring and oil seals.
Special angle designed head provides easier access for removal than traditional tools.
Length: 170 mm and 150 mm.

267005990	BS1235		







ATTREZZO RINFORZATO RIMOZIONE GUARNIZIONI
Attrezzo multifunzione per interventi generali di rimozione e raschiatura.
Ideale per rimuovere stemmi, guarnizioni, strisce decorative e decalcomanie.
Evita il rischio di danneggiare le superfici in metalli morbidi o le parti verniciate.
Impugnatura robusta e resistente idonea per l'uso di un martello dove sia necessario applicare una forza maggiore.
Lunghezza: 280 mm (11").

REINFORCED PLASTIC SCRAPER
The scraper is a multi-function tool designed for general scraping jobs.
Ideal for removal of badges, gaskets, stripes, decals etc.
Eliminates damage to the surface of soft metals and paintwork.
Durable tough handle suitable for hammer use where extra force is required.
Length: 280 mm (11").

A	**267006170**	BS2260	15 mm	
B	**267006180**	BS2261	30 mm	
B	**267006190**	BS2262	50 mm	







ATTREZZO PER RILEVAMENTO PROFILI 250 MM
Per il rilevamento rapido e semplice di forme complesse per interventi di taglio e sagomatura.
Lunghezza: 250 mm

250 MM PROFILE GAUGE
Quick and easy to gauge difficult shapes for cutting and shaping.
Length: 250 mm

267006160	BS4502		



SET RIPARAZIONE FILETTATURE METRICO
Inserti filettati: M5-0,8 x 1,5D, M6-1,0 x 1,5D, M8-1,25 x 1,5D, M10-1,5 x 1,5D, M12-1,75 x 1,5D.
Misura punte a forare: 5,2 - 6,3 - 8,3 - 10,5 - 12,5 mm

THREADED COIL INSERT REPAIR KIT (METRIC)
Screw-Coil: M5-0.8 x 1.5D, M6-1.0 x 1.5D, M8-1.25 x 1.5D, M10-1.5 x 1.5D, M12-1.75 x 1.5D.
Drill size: 5.2, 6.3, 8.3, 10.5, 12.5 mm

267006120	BS02961		



ALTRI ATTREZZI - *TOOLS*

Codice RMS *RMS Code*	Codice a barre *Barcode*	Codice Bikeservice *Bikeservice Code*	Descrizione *Description*
267006520		**BS2302**	Attrezzo rimozione tappi ispezione motore | *Timing and inspection plug tool*
267006530		**BS9947**	Attrezzo montaggio valvole | *Fitting valves tool*
267006540		**BS8008**	Attrezzo stallonamento pneumatici | *Tire change extruders tool*
267006550		**BS5610**	Fermo per montaggio pneumatici | *Tire bead holding tool*
267006560		**BS80017**	Chiave 3/8 snodata a T | *3/8 Jointed T handle wrench*
267006570		**BS80018**	Chiave 1/4 snodata a T | *1/4 Jointed T handle wrench*
267006580		**BS2461**	Estrattore volano femmina M24x1,5 | *Magneto flywheel puller M24x1,5*
267006590		**BS2462**	Estrattore volano femmina M26x1,0 | *Magneto flywheel puller M26x1,0*
267006600		**BS2463**	Estrattore volano femmina M30x1,5 | *Magneto flywheel puller M30x1,5*
267006610		**BS2464**	Estrattore volano femmina M30x1,0 | *Magneto flywheel puller M30x1,0*
267006620		**BS2465**	Estrattore volano femmina M30x1,5 I 50 | *Magneto flywheel puller M30x1,5 I 50*
267006630		**BS2467**	Estrattore volano femmina M33x1,5 | *Magneto flywheel puller M33x1,5*
267006640		**BS2469**	Estrattore volano femmina M35x1,5 | *Magneto flywheel puller M35x1,5*
267006650		**BS2483**	Estrattore volano femmina M24x1,0 | *Magneto flywheel puller M24x1,0*
267006660		**BS2484**	Estrattore volano femmina M28x1,0 | *Magneto flywheel puller M28x1,0*
267006670		**BS2485**	Estrattore volano femmina M30x1,25 | *Magneto flywheel puller M30x1,25*
267006680		**BS2486**	Estrattore volano femmina M32x1,5 | *Magneto flywheel puller M32x1,5*
267006700		**BS2488**	Estrattore volano femmina M38x1,5 | *Magneto flywheel puller M38x1,5*
267006710		**BS2489**	Estrattore volano femmina M42x1,5 | *Magneto flywheel puller M42x1,5*
267006280		**BS1661**	Chiave Esagonale a T L. 300 - 6 mm | *T-Handle Socket T L. 300 - 6 mm*
267006290		**BS1662**	Chiave Esagonale a T L. 300 - 8 mm | *T-Handle Socket T L. 300 - 8 mm*
267006300		**BS1663**	Chiave Esagonale a T L. 300 - 10 mm | *T-Handle Socket T L. 300 - 10 mm*
267006310		**BS1664**	Chiave Esagonale a T L. 300 - 12 mm | *T-Handle Socket T L. 300 - 12 mm*
267006320		**BS1665**	Chiave Esagonale a T L. 300 - 13 mm | *T-Handle Socket T L. 300 - 13 mm*
267006330		**BS1666**	Chiave Esagonale a T L. 300 - 14 mm | *T-Handle Socket T L. 300 - 14 mm*
267006340		**BS1667**	Chiave Esagonale a T L. 300 - 17 mm | *T-Handle Socket T L. 300 - 17 mm*
267006350		**BS1668**	Chiave Esagonale a T L. 300 - 19 mm | *T-Handle Socket T L. 300 - 19 mm*
267006360		**BS6012A**	Chiave Combinata 6 mm | *Multi Driver Wrench 6 mm*
267006370		**BS6012B**	Chiave Combinata 8 mm | *Multi Driver Wrench 8 mm*
267006380		**BS6012C**	Chiave Combinata 10 mm | *Multi Driver Wrench 10 mm*
267006390		**BS6012D**	Chiave Combinata 12 mm | *Multi Driver Wrench 12 mm*
267006400		**BS6012E**	Chiave Combinata 13 mm | *Multi Driver Wrench 13 mm*

Codice RMS *RMS Code*	Codice a barre *Barcode*	Codice Bikeservice *Bikeservice Code*	Descrizione *Description*
267006410		**BS6012F**	Chiave Combinata 14 mm | *Multi Driver Wrench 14 mm*
267006420		**BS6012G**	Chiave Combinata 17 mm | *Multi Driver Wrench 17 mm*
267006430		**BS6012H**	Chiave Combinata 19 mm | *Multi Driver Wrench 19 mm*
267006510		**BS7407H**	Chiave Combinata a Cricchetto 6 mm | *Ratchet Wrench 6 mm*
267006440		**BS7407A**	Chiave Combinata a Cricchetto 8 mm | *Ratchet Wrench 8 mm*
267006450		**BS7407B**	Chiave Combinata a Cricchetto 10 mm | *Ratchet Wrench 10 mm*
267006460		**BS7407C**	Chiave Combinata a Cricchetto 12 mm | *Ratchet Wrench 12 mm*
267006470		**BS7407D**	Chiave Combinata a Cricchetto 13 mm | *Ratchet Wrench 13 mm*
267006480		**BS7407E**	Chiave Combinata a Cricchetto 14 mm | *Ratchet Wrench 14 mm*
267006490		**BS7407F**	Chiave Combinata a Cricchetto 17 mm | *Ratchet Wrench 17 mm*
267006500		**BS7407G**	Chiave Combinata a Cricchetto 19 mm | *Ratchet Wrench 19 mm*

PUNZONI RICAMBIO - *SPARE PARTS*

267005601 NEW

BIKESERVICE #4 | *SPARE PART #4*
BS3510S01
Per smagliacetena 267005600 | *For chain tool 267005600*



267005602 NEW

BIKESERVICE #5 | *SPARE PART #5*
BS3510S02
Per smagliacetena 267005600 | *For chain tool 267005600*



267005603 NEW

BIKESERVICE #6 | *SPARE PART #6*
BS3510S03
Per smagliacetena 267005600 | *For chain tool 267005600*





RONDELLA PIANA ZINCATA - *GALVANIZED WASHER*



Codice RMS *RMS Code*	Dimensioni *Dimensions*	Quantità *Quantity*	Codice a barre *Barcode*
121858810	Ø 5 mm	50 Pz. I *50 Pcs*	
121858820	Ø 6 mm	50 Pz. I *50 Pcs*	
121858720	Ø 7 mm	50 Pz. I *50 Pcs*	
121858830	Ø 8 mm	100 Pz. I *100 Pcs*	

DADO ZINCATO - *GALVANIZED NUT*



Codice RMS *RMS Code*	Dimensioni *Dimensions*	Quantità *Quantity*	Codice a barre *Barcode*
121858840	M4	10 Pz. I *10 Pcs*	
121858850	M5	10 Pz. I *10 Pcs*	
121858860	M6	10 Pz. I *10 Pcs*	
121858870	M7	10 Pz. I *10 Pcs*	
121858880	M8	10 Pz. I *10 Pcs*	

RONDELLA GROWER ZINCATA - *GROWER GALVANIZED WASHER*



Codice RMS *RMS Code*	Dimensioni *Dimensions*	Quantità *Quantity*	Codice a barre *Barcode*
121858790	Ø 5 mm	100 Pz. I *100 Pcs*	
121858800	Ø 6 mm	100 Pz. I *100 Pcs*	
121858730	Ø 7 mm	50 Pz. I *50 Pcs*	
121858780	Ø 8 mm	50 Pz. I *50 Pcs*	
121860070	Ø 10 mm	100 Pz. I *100 Pcs*	

VITE TESTA ESAGONALE ZINCATA - *GALVANIZED HEXAGONAL SCREW*



Codice RMS *RMS Code*	Dimensioni *Dimensions*	Quantità *Quantity*	Codice a barre *Barcode*
121858910	M5 x 16 mm	100 Pz. I *100 Pcs*	
121858920	M5 x 20 mm	100 Pz. I *100 Pcs*	
121858930	M5 x 25 mm	100 Pz. I *100 Pcs*	
121858940	M6 x 16 mm	10 Pz. I *10 Pcs*	
121858950	M6 x 20 mm	10 Pz. I *10 Pcs*	
121858960	M6 x 25 mm	10 Pz. I *10 Pcs*	
121860080	M7 x 16 mm	50 Pz. I *50 Pcs*	
121860090	M7 x 20 mm	50 Pz. I *50 Pcs*	
121860100	M7 x 25 mm	10 Pz. I *10 Pcs*	
121858970	M8 x 16 mm	100 Pz. I *100 Pcs*	
121858980	M8 x 20 mm	100 Pz. I *100 Pcs*	
121858990	M8 x 25 mm	10 Pz. I *10 Pcs*	
121858900	M10 x 80 mm	10 Pz. I *10 Pcs*	



121860200

PIASTRINA PER VITE AUTOFILETTANTE Ø 2,9 mm | *SELF THREADING PLATE Ø 2,9 mm*
Confezione 50 pz. | *50 Pcs Packing*
Per fissaggio Clacson | *For Horn fixing*

PIAGGIO: Vespa 50 N-L-R
Primavera 125: GL-Super 125-150 Ss 180 Gt • 125 Sprint 150 rally 180-200-T5 125



121860210

PIASTRINA PER VITE AUTOFILETTANTE Ø 3,5 mm | *SELF THREADING PLATE Ø 3,5 mm*
Confezione 50 pz. | *50 Pcs Packing*
Per fissaggio bordo scudo inferiore | *For lower shield fixing*

PIAGGIO: Vespa Lx-Lx FL 2T-4T 50-125-150 - Vespa S 2T-4T 50-125-150
Applicazioni varie - *Various applications:*
Beverly-Fly-Free-Liberty-Nrg-Skipper-X9-Zip- Porter



121860220

PIASTRINA PER VITE AUTOFILETTANTE Ø 4,2 mm | *SELF THREADING PLATE Ø 4,2 mm*
Confezione 50 pz. | *50 Pcs Packing*
Applicazioni varie | *Various applications*

PIAGGIO: Beverly-Carnaby-Fly-Free-Hexagon-Liberty -Mp3-Nrg-Sfera-Skipper-Vespa Et2- Et4-Granturismo-Gts-Gtv-Lx-Vespa S 2T-4T-X Evo-X7-X8-X9-Zip-Typhoon-Ape Calessino-Car-MP601-Poker Benzina/Diesel

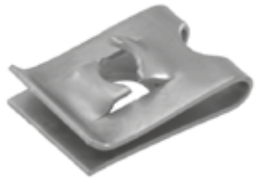

121860230

PIASTRINA BRUNITA PER VITE AUTOFILETTANTE Ø 4,2 mm | *SELF THREADING PLATE Ø 4,2 mm*
Confezione 50 pz. | *50 Pcs Packing*
Applicazioni varie | *Various applications*

PIAGGIO: Beverly-Carnaby-Fly-Liberty-Mp3-N- rg-Vespa Granturismo Gts-Vespa Lx-Vespa S 2T/4T-X Evo-X7-X8-X9 Evolution-Zip 2T/4T-Ape Tm D Lcs



121860240

PIASTRINA PER VITE M 6 | *PLATE M 6*
Confezione 50 pz. | *50 Pcs Packing*
Applicazioni varie | *Various applications*

PIAGGIO: Beverly-Carnaby-Diesis-Fly-Free-Hexa- gon-Liberty-Mp3-Nrg-Ntt-Sfera-Skipper-Skr- Vespa-Granturismo-Lx-Lxv-Vespa S 2T/4T-X-Evo- X7-X8-X9-Zip-Ape Rst Mix-Poker Benzina-Tm D Lcs-Porter

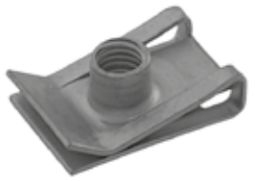

LUBRIFICANTI E PRODOTTI CHIMICI

LUBRICANTS AND CHEMICAL PRODUCTS
LUBRICANTES Y PRODUCTOS QUIMICOS
LUBRIFIANTS ET PRODUITS CHIMIQUES

OLIO MOTORE - *ENGINE OIL*





	Tipo *Type*	Gradazione *Oil grade*	Confezione *Packing*		Codice RMS *RMS Code*	Codice a Barre *Barcode*
ENEOS	**GP4T PERFORMANCE RACING** Olio motore 4T | *4 Stroke engine oil* 100% Sintetico | *100% Synthetic*	5W30	1 L		**267251001**	
ENEOS	**GP4T ULTRA RACING** Olio motore 4T | *4 Stroke engine oil* 100% Sintetico | *100% Synthetic*	10W40	1 L		**267251011**	
ENEOS			60 L		**267251014**	
ENEOS			200 L		**267251035**	
ENEOS	**GP4T ULTRA ENDURO** Olio motore 4T | *4 Stroke engine oil* 100% Sintetico | *100% Synthetic*	15W50	1 L		**267251021**	
ENEOS			60 L		**267251024**	
ENEOS	**MAX PERFORMANCE** Olio motore 4T | *4 Stroke engine oil* 100% Sintetico | *100% Synthetic*	10W30	1 L		**267251051**	
ENEOS			60 L		**267251054**	
ENEOS		10W40	1 L		**267251031**	
ENEOS			4 L		**267251032**	
ENEOS			60 L		**267251034**	
ENEOS	**MAX PERFORMANCE OFF-ROAD** Olio motore 4T | *4 Stroke engine oil* 100% Sintetico | *100% Synthetic*	10W40	1 L		**267251041**	
ENEOS			60 L		**267251044**	
ENEOS	**MAX PERFORMANCE 2 STROKE** Olio miscela 2T | *2 Stroke oil* Sintetico | *Synthetic*	-	1 L		**267251091**	
ENEOS			60 L		**267251094**	
ENEOS	**PERFORMANCE** Olio motore 4T | *4 Stroke engine oil* Minerale | *Mineral*	20W50	1 L		**267251061**	
ENEOS	**CITY PERFORMANCE SCOOTER** Olio motore 4T | *4 Stroke engine oil* 100% Sintetico | *100% Synthetic*	10W40	1 L		**267251071**	
ENEOS			60 L		**267251074**	

OLIO TRASMISSIONE - *GEARBOX OIL*





	Tipo *Type*	Gradazione *Oil grade*	Confezione *Packing*		Codice RMS *RMS Code*	Codice a Barre *Barcode*
ENEOS	**CITY PERFORMANCE SCOOTER** Olio trasmissione | *Gearbox oil* Sintetico | *Synthetic*	-	1 L		**267251081**	
PETRONAS	**EP 80W-90** Olio cambio | *Gearbox oil* Specifiche API GL- 5, MIL L-2105D | *API Specific GL- 5, MIL L-2105D*	80W90	1 L	NEW	**267250240**	

OLIO FORCELLA - *FORK OIL*



	Tipo *Type*	Gradazione *Oil grade*	Confezione *Packing*		Codice RMS *RMS Code*	Codice a Barre *Barcode*
YSS	**FO5W** Olio forcella | *Fork oil*	5W	1 L		**204598000**	
YSS	**FO705W** Olio forcella | *Fork oil*	7.5W	1 L		**204598005**	
YSS	**FO10W** Olio forcella | *Fork oil*	10W	1 L		**204598001**	
YSS	**FO15W** Olio forcella | *Fork oil*	15W	1 L		**204598002**	
YSS	**FO20W** Olio forcella | *Fork oil*	20W	1 L		**204598003**	
YSS	**FO30W** Olio forcella | *Fork oil*	30W	1 L		**204598004**	

Progetto grafico, coordinamento e soluzioni di impaginazione automatizzata:
Winning Associati S.r.l. / ZERO ONE S.a.s. - Bernareggio (MB)

Il presente stampato è a norma delle leggi sul diritto d'autore e del codice civile.
È tassativamente vietata la riproduzione di questo catalogo o di parte di esso, con qualsiasi metodo elettronico, meccanico, per mezzo di fotocopie o altro. I diritti sono riservati per tutti i paesi.
Disegni e dati (descrizioni, caratteristiche, codifiche, ecc.) riportati sul catalogo possono essere soggetti a modifiche e variazioni. RMS S.p.A. si riserva la facoltà di effettuare cambiamenti anche senza preavviso.
Tutti i riferimenti originali sono di proprietà esclusiva delle case produttrici.

Per le condizioni generali di vendita consultare il sito www.rms.it

RMS S.p.A.
Via Macallè 156 - 20831 Seregno (MB) - Tel. +39 0362 27301 - Fax +39 0362 2730270
www.rms.it - info@rms.it

ASPIRAZIONE
INTAKE SYSTEM

ALIMENTAZIONE
FUEL SYSTEM

MOTORE
ENGINE

SCARICO
EXHAUST SYSTEM

IMPIANTO FRENANTE
BRAKING SYSTEM

IMPIANTO ELETTRICO
ELECTRICAL SYSTEM

BATTERIE
BATTERIES

TRASMISSIONE
TRANSMISSION

CARROZZERIA
BODY WORK

TELAIO
CHASSIS

SOSPENSIONI
SUSPENSIONS

CUSCINETTI
BEARINGS

TENUTA
TIGHT SYSTEM

GOMME
TIRES

ACCESSORI
ACCESSORIES

OFFICINA
WORKSHOP

LUBRIFICANTI E PRODOTTI CHIMICI
LUBRICANTS AND CHEMICAL PRODUCTS

YOUR BEST PARTNER

RMS S.p.A.
Via Macallè 156
20831 Seregno (MB) - Italy
Tel. +39 0362 27301
Fax +39 0362 2730270
www.rms.it
info@rms.it

CA RMS 0017